CUI DEVICES

MODEL: CRJ066-1-SMT | **DESCRIPTION:** MODULAR JACK

FEATURES

- 6P6C (RJ12)
- reflow solder compatible
- mounting flange
- vertical orientation
- high temp plastic



RoHS

SPECIFICATIONS

parameter	conditions/description	min	typ	max	units
rated voltage				150	Vac
rated current				1.5	A
withstanding voltage	for 1 minute		1,500		Vac
contact resistance				40	mΩ
insulation resistance		500			MΩ
insertion/withdrawal force				6.12	kgf
operating temperature		0		70	°C
storage temperature		-40		80	°C
life			1,000		cycles
flammability rating	UL94V-0				
RoHS	yes				

SOLDERABILITY

parameter	conditions/description	min	typ	max	units
reflow soldering	for maximum 5 seconds			260	°C

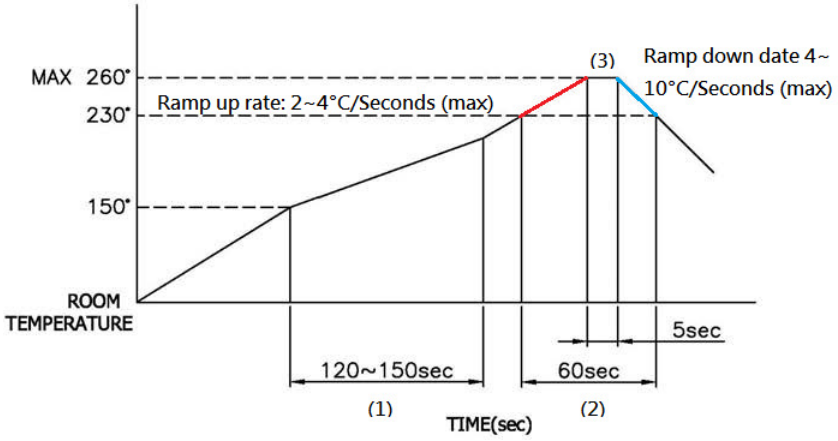

MECHANICAL DRAWING

units: mm
tolerance:
X ±0.5 mm
X.X ±0.38 mm
X.XX ±0.25 mm
X.XXX ±0.10 mm
PCB: ±0.05 mm
PCB thickness: 1.6 mm
unless otherwise noted

ITEM	DESCRIPTION	MATERIAL	PLATING/COLOR
1	insulator	PA9T (UL94V-0)	black
2	contact terminals	phosphor bronze	contact area: 6 µ" gold over nickel solder area: tin over nickel

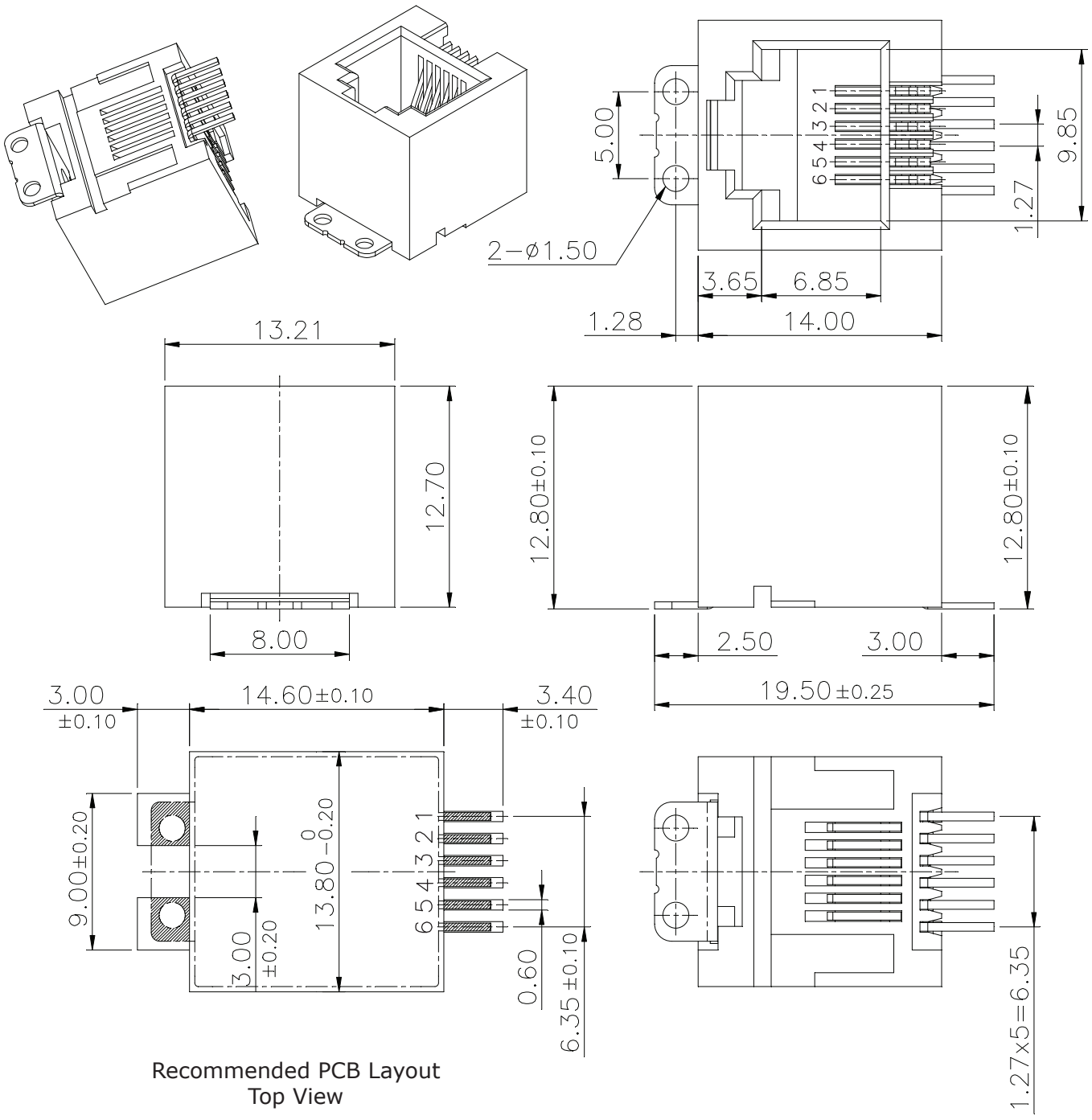

Recommended PCB Layout
Top View

PACKAGING

units: mm

Reel Size: Ø330 mm
Reel QTY: 230 pcs
Carton QTY: 1,610 pcs

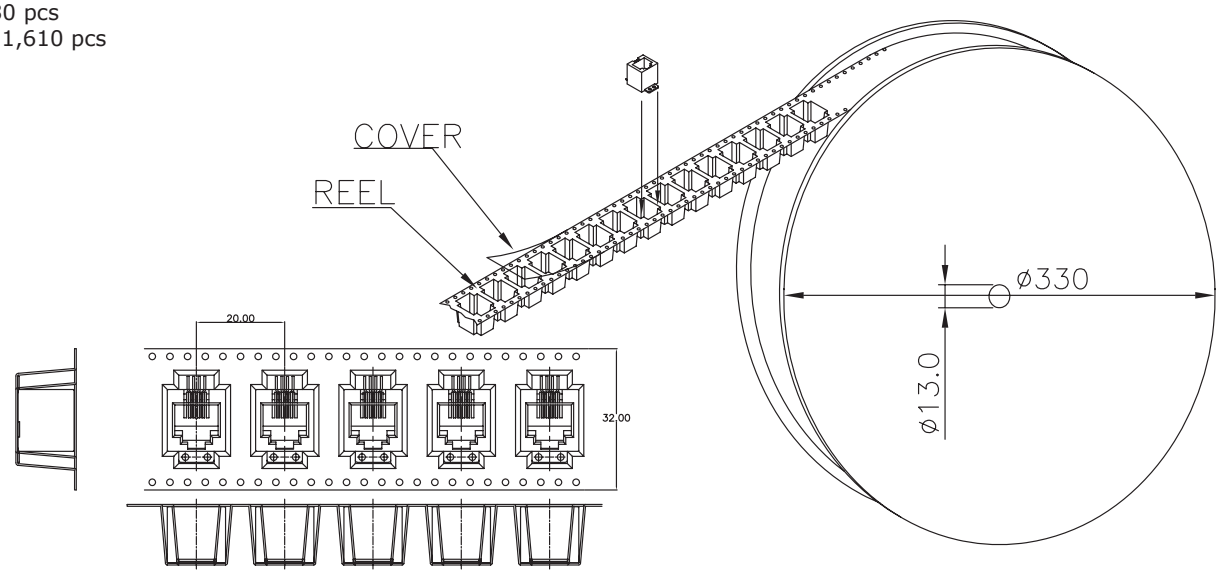

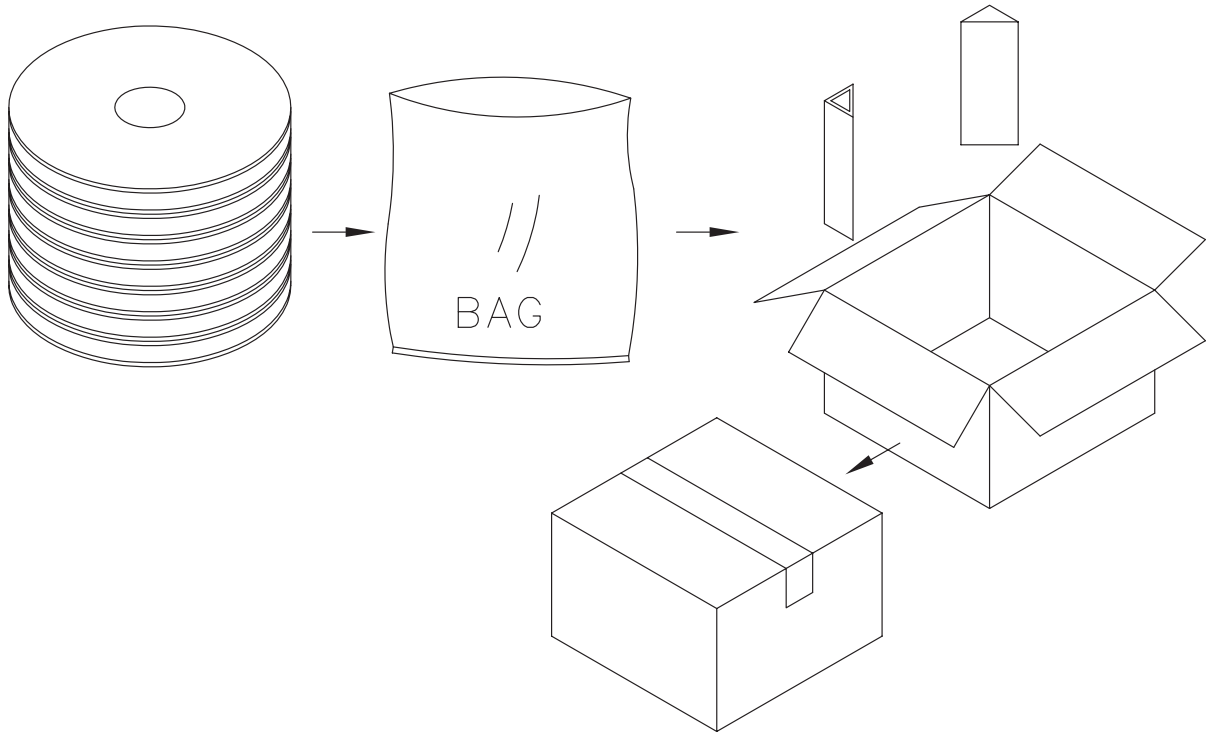

REVISION HISTORY

rev.	description	date
1.0	initial release	04/05/2021
1.01	updated packaging	10/05/2021

The revision history provided is for informational purposes only and is believed to be accurate.

CUI DEVICES

CUI Devices offers a one (1) year limited warranty. Complete warranty information is listed on our website.

CUI Devices reserves the right to make changes to the product at any time without notice. Information provided by CUI Devices is believed to be accurate and reliable. However, no responsibility is assumed by CUI Devices for its use, nor for any infringements of patents or other rights of third parties which may result from its use.

CUI Devices products are not authorized or warranted for use as critical components in equipment that requires an extremely high level of reliability. A critical component is any component of a life support device or system whose failure to perform can be reasonably expected to cause the failure of the life support device or system, or to affect its safety or effectiveness.

cuidevices.com