S

NINA-W10 series

Stand-alone multiradio modules

Data sheet

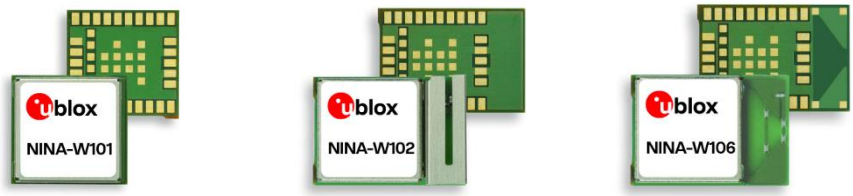

Abstract

This technical data sheet describes the NINA-W10 series stand-alone multiradio MCU module that integrates a powerful microcontroller (MCU) and a radio for wireless communication. The module has a number of important embedded security features, including secure boot, which ensures the module boots with authenticated software only.

UBX-17065507 - R13
C1 – Public

Document information

Title	**NINA-W10 series**	
Subtitle	Stand-alone multiradio modules	
Document type	Data sheet	
Document number	UBX-17065507	
Revision and date	R13	16-Aug-2022
Disclosure restriction	C1 – Public	

Product status	Corresponding content status	
Functional sample	Draft	For functional testing. Revised and supplementary data will be published later.
In development / Prototype	Objective Specification	Target values. Revised and supplementary data will be published later.
Engineering sample	Advance Information	Data based on early testing. Revised and supplementary data will be published later.
Initial production	Early Production Information	Data from product verification. Revised and supplementary data may be published later.
Mass production / End of life	Production Information	Document contains the final product specification.

This document applies to the following products:

Product name	Type number	Hardware version	IN/PCN reference	Product status
NINA-W101	NINA-W101-00B-00	06	UBX-22006732	Obsolete
NINA-W101	NINA-W101-01B-00	07	N/A	Initial Production
NINA-W102	NINA-W102-00B-00	06	UBX-22006732	End-of-life
NINA-W102	NINA-W102-01B-00	07	N/A	Initial Production
NINA-W106	NINA-W106-00B-01	06	UBX-21040655	Initial Production
NINA-W106	NINA-W106-10B-00	16	N/A	Initial Production

u-blox or third parties may hold intellectual property rights in the products, names, logos and designs included in this document. Copying, reproduction, modification or disclosure to third parties of this document or any part thereof is only permitted with the express written permission of u-blox.
The information contained herein is provided “as is” and u-blox assumes no liability for its use. No warranty, either express or implied, is given, including but not limited to, with respect to the accuracy, correctness, reliability and fitness for a particular purpose of the information. This document may be revised by u-blox at any time without notice. For the most recent documents, visit www.u-blox.com.
Copyright © u-blox AG.

Contents

Document information **2**
Contents **3**
1 Functional description **6**
1.1 Overview 6
1.2 Applications 6
1.3 Block diagram 7
1.4 Product variants 7
1.4.1 NINA-W101 7
1.4.2 NINA-W102 7
1.4.3 NINA-W106 7
1.5 Radio performance 8
1.6 CPU 8
1.6.1 Software upgrade 9
1.7 MAC addresses 9
1.8 Power modes 9
2 Interfaces **10**
2.1 Power supply 10
2.1.1 Module supply input (VCC) 10
2.1.2 Digital I/O interfaces reference voltage (VCC_IO) 10
2.2 Low power clock 10
2.3 Module reset 10
2.4 Bootstrap pins 11
2.5 RF antenna interface 11
2.5.1 Internal antenna 11
2.5.2 External RF antenna interface 12
2.6 IO signals 12
2.6.1 Pulse Width Modulation (PWM) 12
2.7 Data interfaces 12
2.7.1 UARTs 12
2.7.2 RMII 13
2.7.3 SPI 13
2.7.4 Dual/Quad SPI 13
2.7.5 I2C 13
2.7.6 SDIO 13
2.7.7 CAN 13
2.8 Debug interfaces 14
2.8.1 JTAG debug interfaces 14
2.9 Analog interfaces 14
2.9.1 Analog to digital converters 14
2.9.2 Digital to analog converters 14

3 Pin definition 15
3.1 Input and output pins 15
3.2 NINA-W101/W102 pin assignment 15
3.3 NINA-W106 pin assignment 16
3.4 Pinout 17
4 Electrical specifications 20
4.1 Absolute maximum ratings 20
4.1.1 Maximum ESD ratings 20
4.2 Operating conditions 20
4.2.1 Operating temperature range 20
4.2.2 Supply/Power pins 21
4.2.3 RESET_N pin 21
4.2.4 LPO clock 21
4.2.5 Digital pins 21
4.2.6 Current consumption 22
4.2.7 Wi-Fi radio characteristics 22
4.2.8 Bluetooth radio characteristics 23
4.2.9 Bluetooth LE characteristics 23
4.2.10 Antenna radiation patterns 24
5 Mechanical specifications 28
5.1 NINA-W101 mechanical specifications 28
5.2 NINA-W102 mechanical specifications 29
5.3 NINA-W106 mechanical specifications 30
6 Qualification and approvals 31
6.1 Country approvals 31
6.2 European Union regulatory compliance 31
6.2.1 Radio Equipment Directive (RED) 2014/53/EU 31
6.2.2 Compliance with the RoHS directive 31
6.3 FCC/IC Compliance 31
6.3.1 Open CPU responsibility and obligations 31
6.3.2 RF-exposure statement 32
6.3.3 End-product user manual instructions 33
6.3.4 End-product labeling requirements 33
6.3.5 End-product compliance 34
6.4 Japan radio equipment compliance 35
6.5 NCC Taiwan compliance 35
6.5.1 Taiwan NCC Warning Statement 35
6.5.2 NINA-W101 labeling requirements for end product 35
6.5.3 NINA-W102 labeling requirements for end product 36
6.5.4 NINA-W106 labeling requirements for end product 36
6.6 KCC South Korea compliance 36
6.7 Brazil compliance 36

6.8 Australia and New Zealand regulatory compliance 37
6.9 South Africa regulatory compliance 38
6.10 Safety Compliance 38
6.11 Bluetooth qualification information 38
7 Antennas 39
7.1 Antenna accessories 40
7.2 Approved antennas 40
7.2.1 Single band antennas 40
7.2.2 Dual-band antennas 43
8 Product handling 45
8.1 Packaging 45
8.1.1 Reels 45
8.1.2 Tapes 45
8.2 Moisture sensitivity levels 47
8.3 Reflow soldering 47
8.4 ESD precautions 47
9 Labeling and ordering information 48
9.1 Product labeling 48
9.2 Product identifiers 49
9.3 Identification codes 49
9.4 Ordering information 49
Appendix 50
A Glossary 50
Related documents 51
Revision history 51
Contact 52

1 Functional description

1.1 Overview

NINA-W10 series are stand-alone multiradio MCU modules integrate a powerful microcontroller (MCU) and a radio for wireless communication. With the open CPU architecture, customers can develop advanced applications running on the dual core 32-bit MCU. The radio provides support for Wi-Fi 802.11b/g/n in the 2.4 GHz ISM band and Bluetooth v4.2 (Bluetooth BR/EDR and Bluetooth Low Energy (LE) communications.

These compact modules include the wireless MCU, flash memory, crystal, and other components for matching, filtering, antenna, decoupling, and antenna operation. Supporting integrated cryptographic hardware accelerators, NINA-W10 series modules are ideal for telematics, low power sensors, connected factories, connected buildings (appliances and surveillance), point-of-sales, health devices, and other design solutions that demand top-grade security.

The simple device design allows developers to use an external antenna (NINA-W101) or utilize the internal antenna (NINA-W102 and NINA-W106) in the application design.

NINA-W10 modules are compliant with the Radio Equipment Directive (RED) and are certified as modular transmitters in the following countries: US (FCC), Canada (IC / ISED RSS), Japan (MIC), Taiwan (NCC), South Korea (KCC), Australia / New Zealand (ACMA), Brazil (Anatel), South Africa (ICASA). The modules are also qualified in accordance with the ISO 16750 standard for professional grade operation, and supporting an extended temperature range of –40 °C to +85 °C.

⚠ Approval for NINA-W106 is currently pending in some countries. See also Country approvals.

1.2 Applications

NINA-W10 series are suitable for a wide range of applications, including:

- Wi-Fi networks
- Internet of Things (IoT)
- Bluetooth and Bluetooth low energy applications
- Telematics
- Point-of-sales
- Medical and industrial networks
- Access to laptops, mobile phones, and similar consumer devices
- Home/building automation apps
- Ethernet/Wireless gateways

1.3 Block diagram

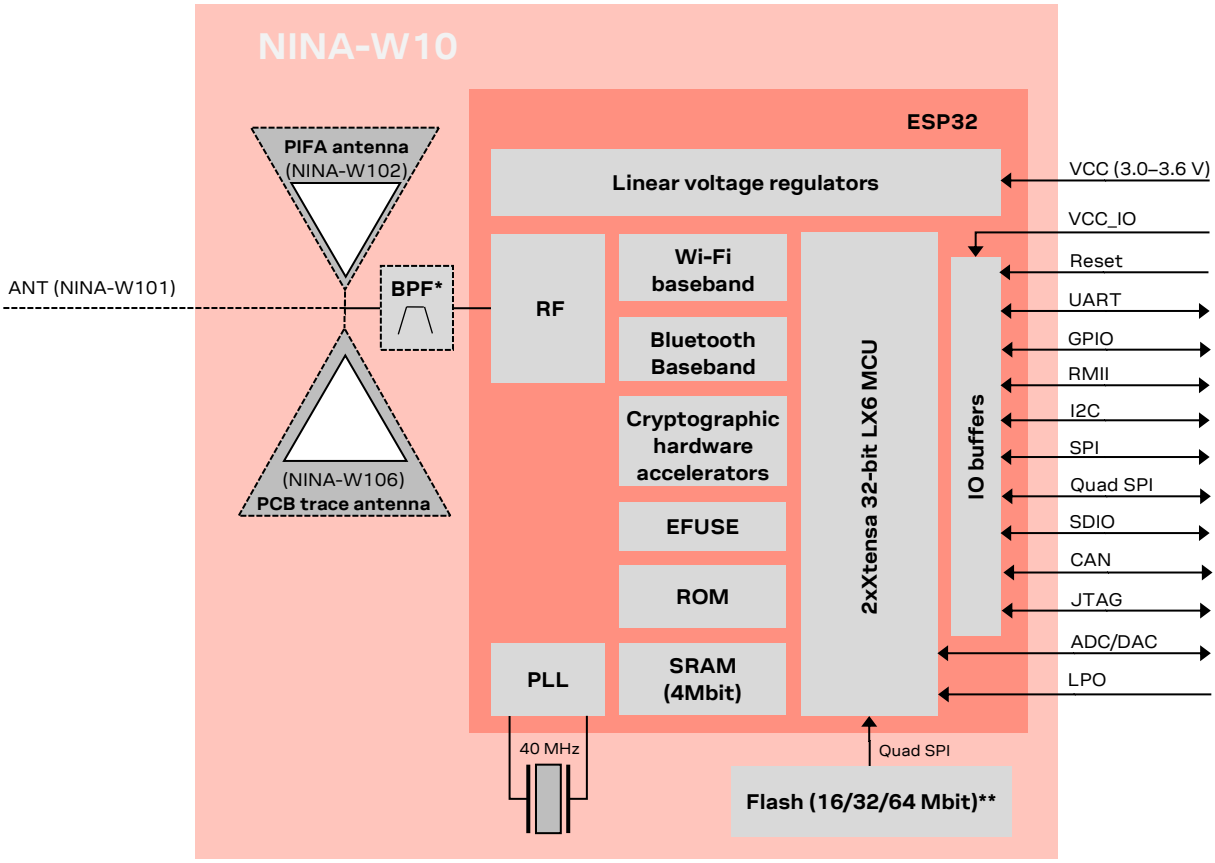

* Only on NINA-W101 and NINA-W102.

** 16 Mbit NINA-W101 and NINA-W102; 32 Mbit NINA-W106-00B; 64Mbit NINA-W106-10B.

Figure 1: NINA-W10 series block diagram

1.4 Product variants

NINA-W10 modules have an open CPU architecture that is tailored towards OEMs that want to embed Wi-Fi, Bluetooth, and Bluetooth LE support into their own application.

1.4.1 NINA-W101

NINA-W101 has no internal antenna, but the RF signal for routing to an external antenna or antenna connector signal is exposed through a dedicated module pin instead. With a physical size of only 10.0 x 10.6 mm, the outline of this module variant is smaller than those equipped with an antenna. The module outline is 10.0 x 10.6 mm with a height of 2.2 mm.

1.4.2 NINA-W102

NINA-W102 is equipped with a PIFA antenna. The RF signal is not connected to any module pin. The module outline is 10.0 x 14.0 mm with a height of 3.8 mm.

1.4.3 NINA-W106

NINA-W106 is equipped with an internal PCB trace antenna, using antenna technology licensed from ProAnt AB. The RF signal is not connected to any module pin. The module outline is 10.0 x 14.0 mm with a height of 2.2 mm.

1.5 Radio performance

NINA-W10 series (NINA-W101, NINA-W102 and NINA-W106) modules support Wi-Fi and are conformant with IEEE 802.11b/g/n single-band 2.4 GHz operation, Bluetooth BR/EDR, and Bluetooth LE specifications, as shown in Table 1.

Wi-Fi	Bluetooth BR/EDR	Bluetooth Low Energy
IEEE 802.11b/g/n	Bluetooth v4.2 + EDR Maximum number of slaves: 7	Bluetooth 4.2 BLE dual-mode
Band support Station mode: 2.4 GHz, channel 1-13* Access Point mode: 2.4 GHz, channel 1-13*	Band support 2.4 GHz, 79 channels	Band support 2.4 GHz, 40 channels
Typical conducted output power: 15 dBm	Typical conducted output power: - 1 Mbit/s: 5 dBm - 2/3 Mbit/s: 5 dBm	Typical conducted output power 5 dBm
Typical radiated output power: 18 dBm EIRP**	Typical radiated output power: - 1 Mbit: 8 dBm EIRP** - 2/3 Mbit/s: 8 dBm EIRP**	Typical radiated output power 8 dBm EIRP**
Conducted sensitivity -96 dBm	Conducted sensitivity: -88 dBm	Conducted sensitivity -88 dBm
Data rates: IEEE 802.11b: 1 / 2 / 5.5 / 11 Mbit/s IEEE 802.11g: 6 / 9 / 12 / 18 / 24 / 36 / 48 / 54 Mbit/s IEEE 802.11n: MCS 0-7, HT20 (6.5-72 Mbit/s)	Data rates: 1 / 2 / 3 Mbit/s	Data rates: 1 Mbit/s

* Depending on the location (country or region), channels 12-13 must be limited or disabled; the software implementation must support country determination algoritms for using channel 12-13, for example, with 802.11d. For further information, see also Country approvals.

** RF power including maximum antenna gain (3 dBi).

Table 1: NINA-W10 series Wi-Fi and Bluetooth characteristics

1.6 CPU

NINA-W10 series modules have a dual-core system with two Harvard Architecture Xtensa LX6 CPUs operating at a maximum 240 MHz internal clock frequency.

The main features of the internal NINA-W1 memory include:

- 448 Kbyte ROM for booting and core functions
- 520 Kbyte SRAM for data and instruction
- 16/32 (NINA-W101 and NINA-W102/NINA-W106) Mbit FLASH for code storage, including hardware encryption to protect programs.
- 1 kbit EFUSE (non-erasable memory) for MAC addresses, module configuration, flash encryption, and chip ID

The (NINA-W1) open-CPU variants also support external FLASH and SRAM memory through a Quad SPI interface. See also Dual/Quad SPI.

NINA-W10 is not supplied with any software but includes an open-CPU architecture that allows customers to develop advanced applications running on the dual core 32-bit MCU. The radio provides support for Wi-Fi 802.11b/g/n in the 2.4 GHz ISM band, Bluetooth BR/EDR, and Bluetooth LE communication.

NINA-W10 series modules can be used to design solutions with top-grade security. Including integrated cryptographic hardware accelerators, the modules feature secure boot functionality that ensures that the module can only be restarted with authenticated software.

☞ The customer is responsible for the NINA-W10 certification and configuration. See also Country approvals.

1.6.1 Software upgrade

For information about upgrading NINA-W10 series software, see also the NINA-W1 system integration manual [1].

1.7 MAC addresses

For information about MAC addresses, see https://docs.espressif.com/projects/esp-idf/en/latest/esp32/api-reference/system/system.html#mac-address.

1.8 Power modes

NINA-W10 series modules are power efficient devices capable of operating in different power saving modes and configurations. Different sections of the module can be powered off when they are not needed, and complex wake up events can be generated from different external and internal inputs.

For the lowest current consumption modes, an external LPO clock is required. See also Low power clock. For more information about power modes, see the Espressif ESP32 Datasheet [3].

2 Interfaces

2.1 Power supply

The power for NINA-W10 series modules is supplied through **VCC** and **VCC_IO** pins by DC voltage.

⚠ The system power supply circuit must be able to support peak power. As the current drawn from **VCC** and **VCC_IO** can vary significantly based on Wi-Fi power consumption profiles.

2.1.1 Module supply input (VCC)

NINA-W10 series modules use an integrated Linear Voltage converter to transform and stabilize the supply voltage applied to the **VCC** pin.

2.1.2 Digital I/O interfaces reference voltage (VCC_IO)

All NINA-W10 series modules support an additional supply input for setting the I/O voltage level.

The separate **VCC_IO** pin enables integration of the module into applications with different voltage levels (1.8 V or 3.3 V for example) without any level converters. NINA-W1 modules currently support a 3.3 V IO voltage level only.

2.2 Low power clock

NINA-W10 series modules do not have an internal low power oscillator (LPO), which is required for low power modes. If low power modes are required, an external 32.768 kHz LPO signal can be supplied externally through **LPO_IN**.

2.3 Module reset

NINA-W10 series modules can be reset (rebooted) with a low-level input on the **RESET_N** pin. The logic level of this pin is normally set high using an internal pull-up resistor. The low-level input triggers a “hardware reset” of the module. The **RESET_N** signal should be driven by an open drain, open collector, or contact switch. The chip works at the minimum power when **RESET_N** is low (off).

2.4 Bootstrap pins

Several module pins related to the boot configuration must be strapped correctly using either pull-up or pull-down resistors, as shown in Table 2.

Exceptionally, pin 32 can be connected to GND to turn off debug printouts during start-up.

⚠ Bootstrap pins should be avoided if other GPIO pins can be used instead. Note that all module pins shown in bold are configured to their default state internally in the ESP32 chip and must NOT be configured externally.

Pin	State during boot	Default	Behavior	Description
36	0		VDD_SDIO=3.3V	Internal flash voltage
	1	**10 kΩ pull-up**	**VDD_SDIO=1.8V (VDD_SDIO should always be at 1.8 V)**	
27, 25	00		Download Boot	Booting Mode
	01		Reserved, do not use	
	10	**Pull-up*, Pull-down***	**Normal Boot from internal Flash**	
	11		Normal Boot from internal Flash	
32	0		Silent	Debug printouts on UART0 TXD during boot
	1	**Pull-up***	**UART0 TXD toggling**	
32, 28	00		Falling-edge input, falling-edge output	Timing of SDIO slave
	01		Falling-edge input, rising-edge output	
	10		Rising-edge input, falling-edge output	
	11	**Pull-up*, Pull-up***	**Rising-edge input, rising-edge output**	

*About 45 kΩ.

Table 2: NINA-W10 series bootstrapping pins

2.5 RF antenna interface

The RF antenna interface of NINA-W10 modules supports Wi-Fi, Bluetooth BR/EDR and Bluetooth LE on the same antenna. The different communication protocols are time divided on the antenna to switch between the Bluetooth and Wi-Fi data. Although communication using these different protocols is (more or less) transparent in the application, these protocols are never active at exactly the same time in the module antenna.

NINA-W10 series modules support either an internal antenna (NINA-W102 and NINA-W106) or external antennas connected through a dedicated antenna pin (NINA-W101).

2.5.1 Internal antenna

Both NINA-W102 and NINA-W106 modules have internal antennas that are specifically designed and optimized for NINA modules. The NINA-W102 module has a 2.4 GHz PIFA antenna and the NINA-W106 module is equipped with a 2.4 GHz PCB trace antenna.

It is recommended that NINA-W102 modules are placed in such a way that the internal antenna is strategically located in the corner of the host PCB (closest to pin 16). Alternatively, the antenna side can be positioned along one side of the host PCB ground plane.

The suggestion for the PCB trace antenna in NINA-W106 modules is to place it in the middle – along the side edge of the host PCB.

In NINA-W102 and NINA-W106 designs, keep a minimum clearance of 5 mm between the antenna and the casing. Also, keep at least 10 mm of free space around the metal antenna including the area directly below it. If a metal enclosure is required, use NINA-W101 and an external antenna.

It is beneficial to have a large solid ground plane on the host PCB with a good grounding on the module. Minimum ground plane size is 24x30 mm but more than 50x50 mm is recommended.

See also the NINA-W1 series system integration manual [1] for more information about antenna-related design.

⚠ The ANT signal solder pin is not available on the NINA-W102 or NINA-W106 module.

2.5.2 External RF antenna interface

NINA-W101 has an antenna signal (**ANT**) pin with a characteristic impedance of 50 Ω for using an external antenna. The antenna signal supports both Tx and Rx.

The external antenna, for example, can be an SMD antenna (or PCB integrated antenna) on the host board. An antenna connector for using an external antenna via a coaxial cable could also be implemented. A cable antenna might be necessary if the module is mounted in a shielded enclosure such as a metal box or cabinet.

An external antenna connector (U.FL. connector) reference design is available and must be followed to comply with the NINA-W1 FCC/IC modular approvals. See also the list of approved antennas and the NINA-W1 series system integration manual [1].

2.6 IO signals

NINA-W1 has 36 pins in total. The pins can be used as GPI(O) but are also multiplexed with the digital and analog interfaces. The input only signals (GPI) can only be input regardless of the selected function/interface.

- In NINA-W101/NINA-W102 the pins can be used for both input and output. 4 signals can be used for input only.
- In NINA-W106, 20 pins can be used for both input and output. 6 signals can be used for input only.

It is also possible to multiplex all interfaces to any pin through an IO multiplexer, but the speed is limited. See also Digital pins.

2.6.1 Pulse Width Modulation (PWM)

The Pulse Width Modulation (PWM) functionality, for example, can be used to control the intensity of LEDs and driving digital motors. The controller consists of PWM timers, the PWM operator, and a dedicated capture sub-module. Each timer provides timing in synchronous or independent form, and each PWM operator generates the waveform for one PWM channel.

The PWM controller has 16 channels, which can generate independent waveforms that can be used to drive RGB LED devices. For maximum flexibility, the high-speed as well as the low-speed channels can be driven from one of four high-speed/low-speed timers. The PWM controller also has the ability to automatically increase or decrease the duty cycle gradually, allowing for fades without any processor interference. The PWM signals can be configured to be available on any of the GPIO pins via the IO multiplexer.

2.7 Data interfaces

2.7.1 UARTs

NINA-W10 modules have three UART interfaces, UART0 to UART2. Each interface provides asynchronous communication support for RS232, RS485, and IrDA standards (with external drivers).

UART0 serves as the primary interface port. The maximum speed for all UART interfaces is 4 Mbit/s.

All UART interfaces can be routed to any GPIO pin through the IO multiplexer. But, as firmware upgrades are performed through the default pins on UART0, it is advisable NOT to route this interface to the other pins. For further information about the default pins, see also Pinout.

All UART interfaces provide hardware management of the CTS and RTS signals and software flow control (XON and XOFF).

2.7.2 RMII

The RMII (Reduced Media-Independent Interface) Ethernet interface is intended for connecting to an external PHY. The flow control of the UART0 interface is multiplexed with the RMII interface and cannot be used simultaneously. An MDIO (Management Data Input/Output) interface used for controlling the external PHY is also available. The pins for the MDIO interface are configurable by software but the recommended pins are specified in the Pin definition.

2.7.3 SPI

Two SPI interfaces are available for the application. One SPI interface with the name SPI_V and another interface by name SPI_H (the SPI_H interface is multiplexed with the JTAG and SDIO interfaces). It is possible to connect the SPI interfaces to other pins through the IO multiplexer but this reduces the maximum speed. It is also possible to configure the SPI interface as a dual or quad SPI (2 or 4 bit –bidirectional data signals), see also UARTs.

2.7.4 Dual/Quad SPI

The dual/quad SPI (2 or 4 bi-bidirectional data signals) can be used for connecting an additional external flash or SRAM. The SPI to dual/quad SPI signal mappings is shown in Table 3.

SPI signal	Dual SPI signal	Quad SPI signal
MOSI	IO0	IO0
MISO	IO1	IO1
WP	-	IO2
HD	-	IO3
CS	CS	CS
CLK	CLK	CLK

Table 3: SPI to dual/quad SPI signal mapping

2.7.5 I2C

Three I2C interfaces can be routed over any GPIO pin.

NINA-W1 modules can operate as both the master and slave on the I2C bus, using both standard (100 kbps) and fast (400 kbps) transmission speeds. The interface uses the **SCL** signal to clock instructions and data on the **SDL** signal.

2.7.6 SDIO

SDIO is multiplexed with the JTAG interface and the second SPI interface (SPI_H). It is possible to connect the SDIO interfaces to other pin through the IO multiplexer, but the speed is limited. See also Digital pins. Only SDIO host is supported (not SDIO slave).

2.7.7 CAN

NINA-W1 modules support CAN 2.0.

2.8 Debug interfaces

2.8.1 JTAG debug interfaces

NINA-W10 modules support the JTAG debug interface (**JTAG_TMS**, **JTAG_CLK**, **JTAG_TDI** and **JTAG_TDO**). The JTAG interface is multiplexed with the SDIO and secondary SPI interface (SPI_H).

2.9 Analog interfaces

2.9.1 Analog to digital converters

NINA-W10 modules have four pins marked as Analog to Digital Converter (ADC) input signals (**ADC_2**, **ADC_3**, **ADC_4** and **ADC_34**). See also Pin definition. These pins are primarily recommended for use with the ADC application (for compatibility with future NINA modules).

12 additional GPIO pins can be used for ADC application. These pins are marked as ADC-CH in the "ESP-32" column of Table 4. The analog converters are 12-bit SAR ADCs.

For lower power consumption, NINA-W101, NINA-W102 and NINA-W106 modules can measure voltages in sleep mode and threshold settings can be used to wake the CPU.

☞ Analog pins cannot be re-routed to other pins through the IO multiplexer.

2.9.2 Digital to analog converters

Two 8-bit DAC channels **DAC_16** and **DAC_17** can be used to convert the two digital signals into two analog voltage signal outputs. The design structure is composed of integrated resistor strings and a buffer. This dual DAC has **VCC** as input voltage reference and can drive other circuits. The dual channels support independent conversions.

☞ Analog pins cannot be re-routed to other pins via the IO multiplexer.

3 Pin definition

3.1 Input and output pins

The pin assignment is different for each module variant:

- NINA-W101/W102 modules have 36 pins:
  20 can be used for either input or output. 4 are for input only.
- NINA-W106 modules have 36 pins:
  20 can be used for either input or output. 6 are for input only.

3.2 NINA-W101/W102 pin assignment

Figure 2 shows the multiplexed pinout for NINA-W101 and NINA-W102 Open CPU modules. These and several additional interfaces not shown here are described in Table 4.

Although it is also possible to multiplex all interfaces through an IO multiplexer using any pin, the maximum speed is limited. See also Digital pins.

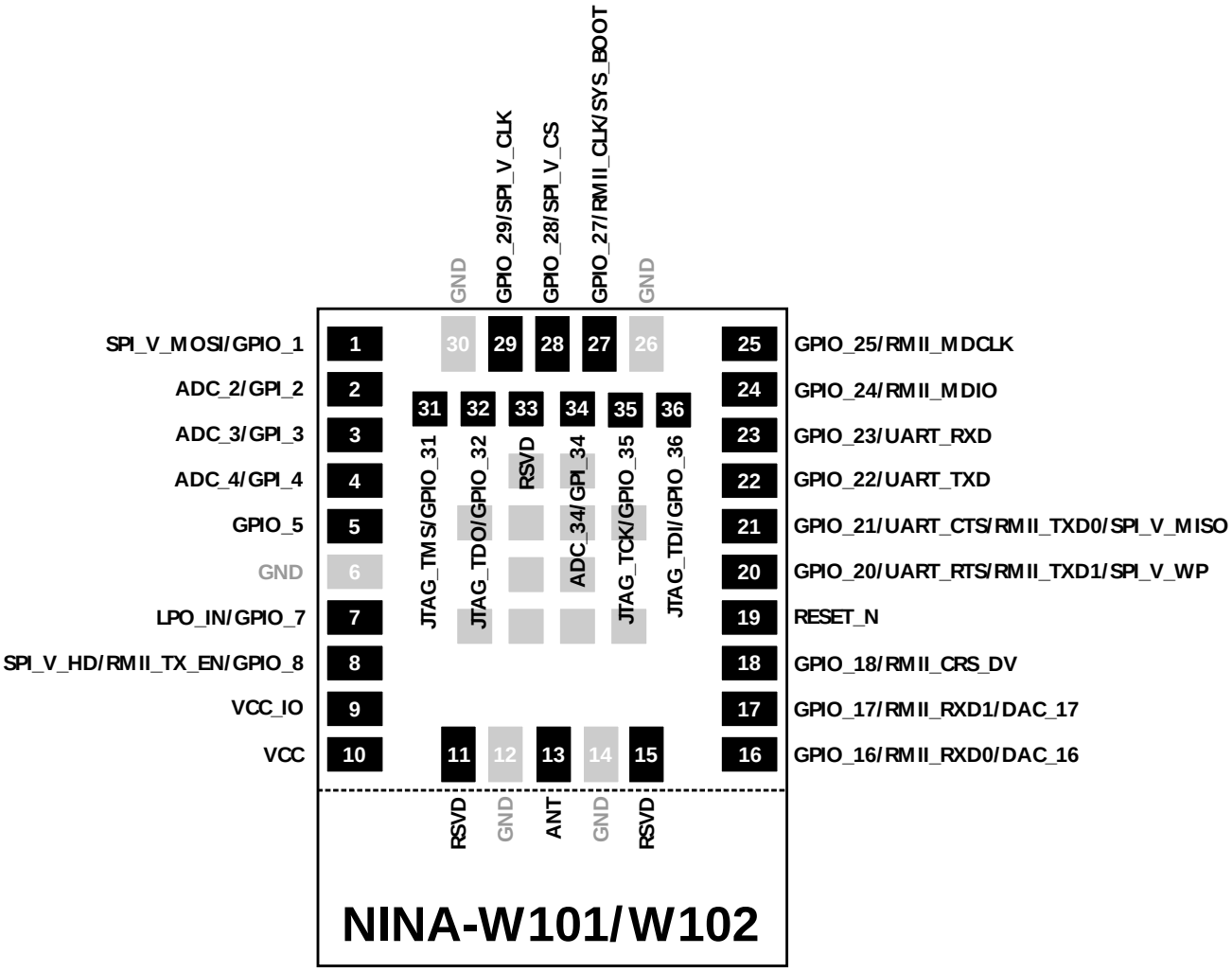

Figure 2: NINA-W101/W102 pin assignment (top view)

- All grey pins located in the center of the module are GND pins.
- The outline of the NINA-W101 module is shown above the dotted line. The additional antenna area of NINA-W102 interfaces is shown below the dotted line.
- Pins 2, 3, 4, and 34 can only be used as (GPI) input signals – regardless of the selected function/interface.
- The signals for several pins are bootstrapped. It is important that these signals, shown in Table 4, have the correct state during startup. See also Bootstrap pins.

3.3 NINA-W106 pin assignment

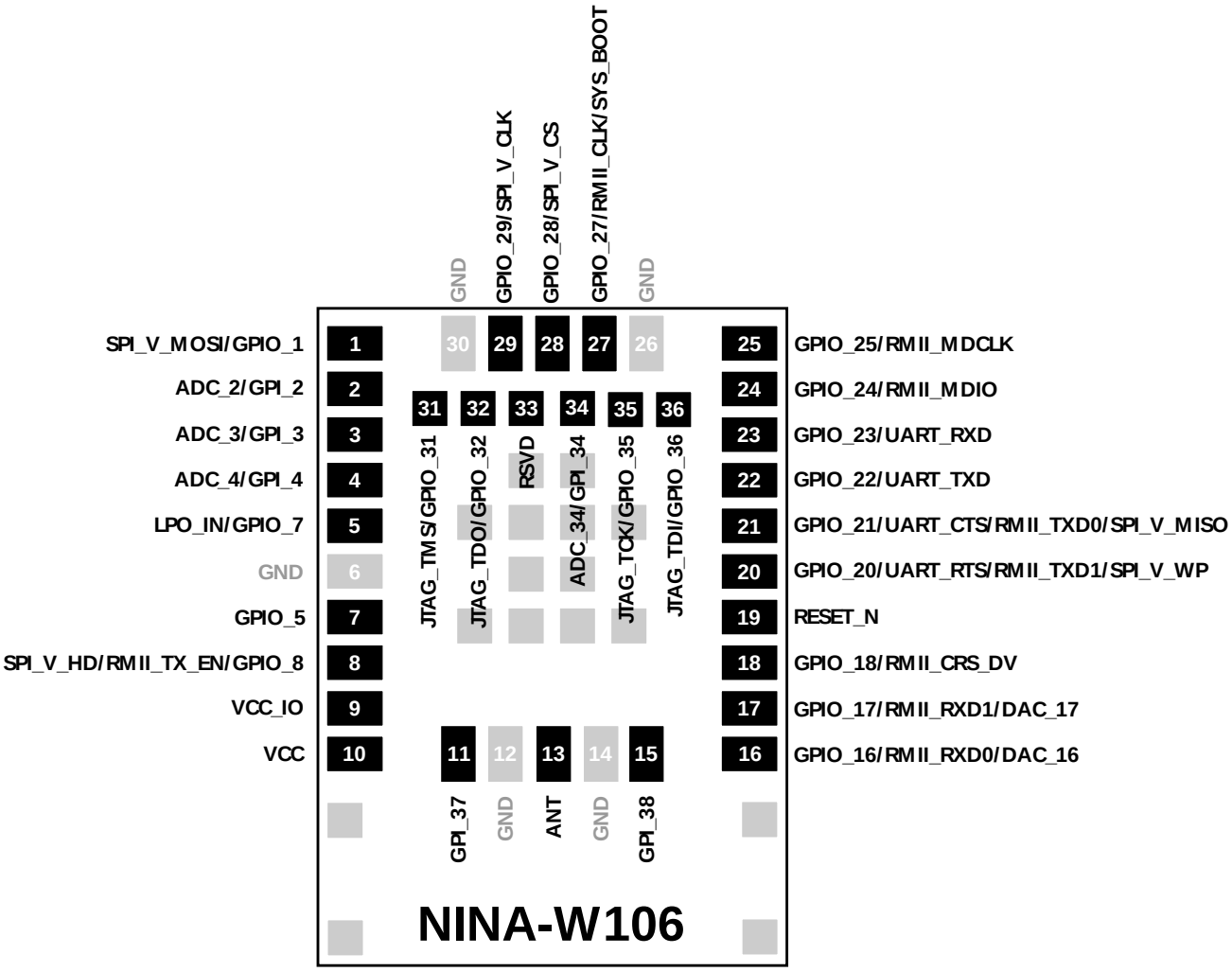

Figure 3: NINA-W106 pin assignment (top view)

- All grey pins located in the center of the modules and the four in the front are GND pins.
- Pins 2, 3, 4, 11, 15, and 34 can only be used as (GPI) input signals – regardless of the selected function/interface.

☞ The signals for several pins are bootstrapped. It is important that these signals, shown in Table 4, have the correct state during startup. See also Bootstrap pins.

☞ **LPO_IN** signals are located on a different pin on NINA-W106.

3.4 Pinout

Table 4 describes the common pinout for all NINA-W10 series modules.

Pin	Name	Additional function	I/O	Description	ESP-32 GPIO / ADC-CH	Remarks
1	GPIO_1/ SPI_V_MOSI		I/O	General Purpose I/O / SPI (port V) Master Output Slave Input	23 /	
2	GPI_2/ ADC_2		I	General Purpose Input pin/ Analog input pin.	34 / 1-CH6	This pin is input only. For further information about the analog input pin, see also Analog to digital converters.
3	GPI_3/ ADC_3		I	General Purpose Input pin/ Analog input pin.	39 / 1-CH3	This pin is input only. For further information about the analog input pin, see also Analog to digital converters.
4	GPI_4/ ADC_4		I	General Purpose Input pin/ Analog input pin.	36 / 1-CH0	This pin is input only. For further information about the analog input pin, see also Analog to digital converters.
5	GPIO_5	TOUCH_9	I/O	General Purpose I/O / Touch button input/ Decoupling	32 / 1-CH4	These are the functions for NINA-W101/NINA-W102. Note the difference compared to NINA-W106. If used with external LPO_IN, put decoupling capacitor >2F to GND on this pin only.
	GPIO_7/ LPO_IN	TOUCH_8	I/O	General Purpose I/O / Low Power Oscillator Input / Touch button input /	33 / 1-CH5	These are the functions for NINA-W106. Note the difference compared to NINA-W101/W102.
6	GND			Ground		
7	GPIO_7/ LPO_IN	TOUCH_8	I/O	General Purpose I/O / Low Power Oscillator Input / Touch button input /	33 / 1-CH5	These are the functions for NINA-W101/NINA-W102. Note the difference compared to NINA-W106.
	GPIO_5	TOUCH_9	I/O	General Purpose I/O / Touch button input/ Decoupling	32 / 1-CH4	These are the functions for NINA-W106. Note the difference compared to NINA-W101/W102. If used with external LPO_IN, put decoupling capacitor >1nF to GND on this pin only.
8	GPIO_8/ RMII_TXEN/ SPI_V_HD/		I/O	General Purpose I/O / RMII Transmit Enable output/ SPI (port V) Hold/	21	
9	VCC_IO		I	Module I/O level voltage input		VIO voltage supply. This pin is internally connected to VCC pin on some other NINA modules.
10	VCC		I	Module supply voltage input		3.0–3.6 V module voltage supply.
11	GPI_37		I	General Purpose I/O / Reserved for future use.		NINA-W106: GPI_37 NINA-W101/NINA-W102: Do not connect.
12	GND			Ground		

Pin	Name	Additional function	I/O	Description	ESP-32 GPIO / ADC-CH	Remarks
13	ANT		I/O	Antenna Tx/Rx interface		50 Ω nominal characteristic impedance, only used with NINA-W101 modules.
14	GND			Ground		
15	GPI_38		I	General Purpose I/O / Reserved for future use.		NINA-W106: GPI_38 NINA-W101/NINA-W102: Do not connect.
16	GPIO_16/ RMII_RXD0/ DAC_16		I/O	General Purpose I/O / RMII Receive Data input 0/ Digital to Analog Converter	25 / 2-CH8	
17	GPIO_17/ RMII_RXD1/ DAC_17		I/O	General Purpose I/O / RMII Receive Data input 1/ Digital to Analog Converter	26 / 2-CH9	
18	GPIO_18/ RMII_CRSDV	TOUCH_7	I/O	General Purpose I/O / Carrier Sense/Receive Data Valid input/ Touch button input /	27 / 2-CH7	
19	RESET_N		I	External system reset input.		Active low
20	GPIO_20/ UART_RTS/ RMII_TXD1/ SPI_V_WP		I/O	General Purpose I/O / UART0 request to send control signal / RMII Transmit Data output 1 SPI (port V) Write Protect/	22	
21	GPIO_21/ UART_CTS/ RMII_TXD0/ SPI_V_MISO/		I/O	General Purpose I/O / UART0 clear to send control signal / RMII Transmit Data output 0/ SPI (port V) Master Input Slave Output	19	
22	GPIO_22/ UART_TXD		I/O	General Purpose I/O / UART data output	1	
23	GPIO_23/ UART_RXD		I/O	General Purpose I/O / UART0 data input	3	
24	GPIO_24/ RMII_MDIO	SPI_H_HD/ SDIO_D1/ TOUCH_0	I/O	General Purpose I/O / RMII Management data/ SPI (port H) Hold/ SDIO host Data bit 1/ Touch button input	4 / 2-CH0	
25	RMII_MDCLK	SPI_H_WP/ SDIO_D0/ TOUCH_2		RMII Management data clock/ SPI (port H) Write Protect/ SDIO host Data bit 0/ Touch button input	2 / 2-CH2	See also Bootstrap pins
26	GND			Ground		
27	RMII_CLK/ SYS_BOOT	TOUCH_1		RMII clock line (input or output)/ Firmware download/ Touch button input	0 / 2-CH1	Pull low during startup for download firmware. See also Bootstrap pins.
28	GPIO_28/ SPI_V_CS		I/O	General Purpose I/O / SPI (port V) chip select	5	
29	GPIO_29/ SPI_V_CLK		I/O	General Purpose I/O / SPI (port V) clock	18	
30	GND			Ground		

Pin	Name	Additional function	I/O	Description	ESP-32 GPIO / ADC-CH	Remarks
31	GPIO_31/ JTAG_TMS	SPI_H_CLK/ SDIO_CLK/ TOUCH_6	I/O	General Purpose I/O / JTAG Test Mode Select/ SPI (port H) clock/ SDIO host clock/ Touch button input	14 / 2-CH6	
32	LOG_BOOT/ JTAG_TDO	SPI_H_CS/ SDIO_CMD/ TOUCH_3		JTAG Test Data Out/ SPI (port H) Chip Select/ SDIO host Command/ Touch button input	15 / 2-CH3	See also Bootstrap pins.
33	RSVD			Reserved for future use.		Do not connect
34	GPI_34/ ADC_34		I	General Purpose Input pin/ Analog input pin.	35 / 1-CH7	For input only
35	GPIO_35/ JTAG_CLK	SPI_H_MOSI/ SDIO_D3/ TOUCH4	I/O	General Purpose I/O / JTAG Test Data In/ SPI (port H) Master Output Slave Input / SDIO host Data bit 3/ Touch button input	13 / 2-CH4	
36	GPIO_36/ JTAG_TDI/	SPI_H_MISO/ SDIO_D2/ TOUCH_5	I/O	General Purpose I/O / JTAG Test Data In (debug interface) / SPI (port H) Master Input Slave Output/ SDIO host Data bit 2/ Touch button input	12 / 2-CH5	See also Bootstrap pins.

Table 4: NINA-W10 pinout

4 Electrical specifications

⚠ Stressing the device above one or more of the ratings listed in the Absolute maximum ratings can cause permanent damage. These are stress ratings only. Operating the module at these or at any conditions other than those specified in the Operating conditions should be avoided. Exposure to absolute maximum rating conditions for extended periods may affect device reliability.

☞ All given application information is only advisory and does not form part of the specification.

4.1 Absolute maximum ratings

Symbol	Description	Condition	Min	Max	Unit
VCC/ VCC_IO	Module supply voltage	Input DC voltage at VCC and VCC_IO pins	-0.3	3.6	V
$I_{VCC\ MAX}$ + $I_{VCC_IO\ MAX}$	Absolute maximum power consumption			500	mA
DPV	Digital pin voltage	Input DC voltage at any digital I/O pin	-0.3	3.6	V
P_ANT	Maximum power at receiver	Input RF power at antenna pin		0	dBm
Tstr	Storage temperature		-40	+85	°C

Table 5: Absolute maximum ratings

⚠ The product is not protected against overvoltage or reversed voltages. If necessary, voltage spikes exceeding the power supply voltage specification, given in Table 5, must be limited to values within the specified boundaries by using appropriate protection devices.

4.1.1 Maximum ESD ratings

Parameter	Min.	Typical	Max.	Unit	Remarks
ESD immunity			±8*	kV	Indirect discharge according to IEC 61000-4-2
ESD sensitivity, tested for all pins except ANT and RSVD pins #11, #15, #33			2.0	kV	Human body model according to JEDEC JS001

* Tested on EVK-NINA-W1 evaluation board.

Table 6: Maximum ESD ratings

⚠ NINA-W10 series modules are Electrostatic Sensitive Devices, which means that some special precautions must be observed when handling them. See also ESD precautions.

4.2 Operating conditions

⚠ Operation beyond the specified operating conditions is not recommended and extended exposure beyond them may affect device reliability.

☞ Unless otherwise specified, all operating condition specifications are at an ambient temperature of 25 °C and at a supply voltage of 3.3 V.

4.2.1 Operating temperature range

Parameter	Min	Max	Unit
Operating temperature	-40*	+85	°C

* See voltage supply condition for the lowest temperature range in Supply/Power pins.

Table 7: Temperature range

4.2.2 Supply/Power pins

Symbol	Parameter	Condition	Min	Typ	Max	Unit
VCC	Input supply voltage	Ambient temperature -20 °C to +85 °C	3.00	3.30	3.60	V
		Ambient temperature -40 °C to +85 °C	3.00	3.30	3.45	V
VCC_IO	I/O reference voltage	Ambient temperature -20 °C to +85 °C	3.00	3.30	3.60	V
		Ambient temperature -40 °C to +85 °C	3.00	3.30	3.45	V

Table 8: Input characteristics of voltage supply pins

4.2.3 RESET_N pin

Pin name	Parameter	Min	Typ	Max	Unit
RESET_N	Low-level input	0		0.3*VCC	V
	Internal pull-up resistance		100		kΩ
	Internal capacitance		10		nF
t_Startup	Startup time after release of reset		2.6		s

Table 9: RESET_N pin characteristics

4.2.4 LPO clock

NINA-W10 series modules do not have an internal low power oscillator (LPO) for low power modes. If low power modes are required, the LPO signal can be supplied to the **LPO_IN** pin from an external oscillator. The amplitude range is 0.6 V < Vpp < **VCC_IO**. If the input signal is square wave the bottom voltage should be higher than 200 mV.

Symbol	Parameter	Min	Typ	Max	Unit
LPO	Input clock frequency		32.768		kHz
	Input slow clock accuracy (Initial + temp + aging)			±150	ppm
Tr/Tf	Input transition time Tr/Tf -10% to 90%			100	ns
	Frequency input duty cycle	20	50	80	%
VIH	Input voltage limits (Square wave, DC-coupled)			VCC_IO	V
VIL		0		0.6	V
	Input capacitance			10	pF

Table 10: External LPO clock characteristics

4.2.5 Digital pins

Pin name	Parameter	Min	Typ	Max	Unit	Remarks
Any digital pin	Input characteristic: Low-level input	0		0.3*VCC_IO	V	
	Input characteristic: high-level input	0.7*VCC_IO		VCC_IO	V	
	Output characteristic: Low-level output	0		0.4	V	
	Output characteristic: High-level output	VCC_IO-0.4		VCC_IO	V	
	Drive capability			12	mA	Source/Sink
	Pull-up/pull-down resistance		45		kΩ.	
Signals rerouted through the IO multiplexer	Output signal speed			20	MHz	
	Input signal speed			10	MHz	The GPIO-Matrix delays the input signals by two cycles of the AHB-clock typical 80 MHz -> 25 ns delay

Table 11: Digital pin characteristics

4.2.6 Current consumption

The typical current consumption of a NINA-W10 module is shown in Table 12. The current consumption is highly dependent on the application implementation. All measurements taken with 3.3 V supply at 25 °C.

☞ The current consumption figures are inherited from the Espressif ESP 32 data sheet [3].

Power mode	Activity	Typ	Unit	Remarks
Wi-Fi	Wi-Fi Tx packet POUT 16 dBm	190	mA	50% duty cycle, transmit 802.11g, OFDM 54 Mbit/s
	Wi-Fi Rx and listening	95	mA	
Bluetooth	Bluetooth Tx Pout 0 dBm	130	mA	50% duty cycle
	Bluetooth Rx and listening	95	mA	
Bluetooth LE	Bluetooth Tx Pout 0 dBm	130	mA	50% duty cycle
	Bluetooth Rx and listening	95	mA	
Modem-sleep mode	CPU speed 240 MHz, dual core	30	mA	Immediate wake-up
	CPU speed 160 MHz, dual core	27	mA	
	CPU speed 80 MHz The CPU is operational. The radio is turned off.	20	mA	
Light-sleep mode	The CPU is paused. The RTC memory and RTC peripherals, as well as the ULP co-processor is running. Any wake-up events (MAC, host, RTC timer, or external interrupts) will wake up the chip.	800	µA	
Deep-sleep mode	The ULP co-processor is powered on	150	µA	
	ULP sensor-monitored pattern	100	µA	@ 1% duty cycle
	RTC timer and RTC memory	10	µA	
Hibernate mode	RTC timer only	5	µA	

Table 12: Current consumption during typical use cases

4.2.7 Wi-Fi radio characteristics

V_{CC} = 3.3 V, T_{amb} = 25 °C

Parameter	Operation mode			Specification	Unit
RF Frequency Range	802.11b/g/n			2.400 – 2.4835	GHz
Modulation	802.11b			CCK and DSSS	
	802.11g/n			OFDM	
Supported Data Rates	802.11b			1, 2, 5.5, 11	Mbit/s
	802.11g			6, 9, 12, 18, 24, 36, 48, 54	Mbit/s
	802.11n			MCS0 – MCS7	
Supported Bandwidth	802.11n			20	MHz
Supported Guard Interval	802.11n			400, 800	ns
Conducted Transmit Power (typical)	802.11b	Channel 6	1 Mbit/s	13* ± 1	dBm
			11 Mbit/s	13* ± 1	dBm
	802.11g	Channel 6	6 Mbit/s	15* ± 1	dBm
			54 Mbit/s	12* ± 1	dBm
	802.11n	Channel 6	MCS0	15* ± 1	dBm

Parameter	Operation mode			Specification	Unit
			MCS7	11* ± 1	dBm
Receiver Sensitivity (typical)	802.11b		1 Mbit/s	-96 ± 2	dBm
			11 Mbit/s	-88 ± 2	dBm
	802.11g		6 Mbit/s	-92 ± 2	dBm
			54 Mbit/s	-74 ± 2	dBm
	802.11n	20 MHz	MCS0	-91 ± 2	dBm
			MCS7	-72 ± 2	dBm

* There is lower output power on band edge channels and also on the highest data rates.

Table 13: Wi-Fi radio characteristics

4.2.8 Bluetooth radio characteristics

V_{CC} = 3.3 V, T_{amb} = 25 °C

Parameter	Operation Mode	Specification	Unit
RF Frequency Range		2.400 – 2.4835	GHz
Supported Modes		Bluetooth v4.2 + EDR	
Number of channels		79	
Modulation	1 Mbit/s	GFSK (BDR)	
	2 Mbit/s	π/4-DQPSK (EDR)	
	3 Mbit/s	8-DPSK (EDR)	
Conducted Transmit Power (typical)	1 Mbit/s	5 ± 1	dBm
	2/3 Mbit/s	5 ± 1	dBm
Receiver Sensitivity (typical)	1 Mbit/s	-88 ± 2	dBm
	2 Mbit/s	-86 ± 2	dBm
	3 Mbit/s	-80 ± 2	dBm

Table 14: Bluetooth radio characteristics

4.2.9 Bluetooth LE characteristics

V_{CC} = 3.3 V, T_{amb} = 25 °C

Parameter	Specification	Unit
RF Frequency Range	2.400 – 2.4835	GHz
Supported Modes	Bluetooth v4.2	
Number of channels	40	
Modulation	GFSK	
Transmit Power (typical)	5 ± 1	dBm
Receiver Sensitivity (typical)	-88 ± 2	dBm

Table 15: Bluetooth LE characteristics

4.2.10 Antenna radiation patterns

The radiation patterns displayed in Table 16 and Table 17 show the radiation patterns of NINA-W102 with internal PIFA antenna and NINA-W106 with internal PCB trace antenna.

Figure 4 provides a visual overview of the measurement procedure and shows how the NINA-W102/NINA-W106 module is aligned to the XYZ-coordinate system.

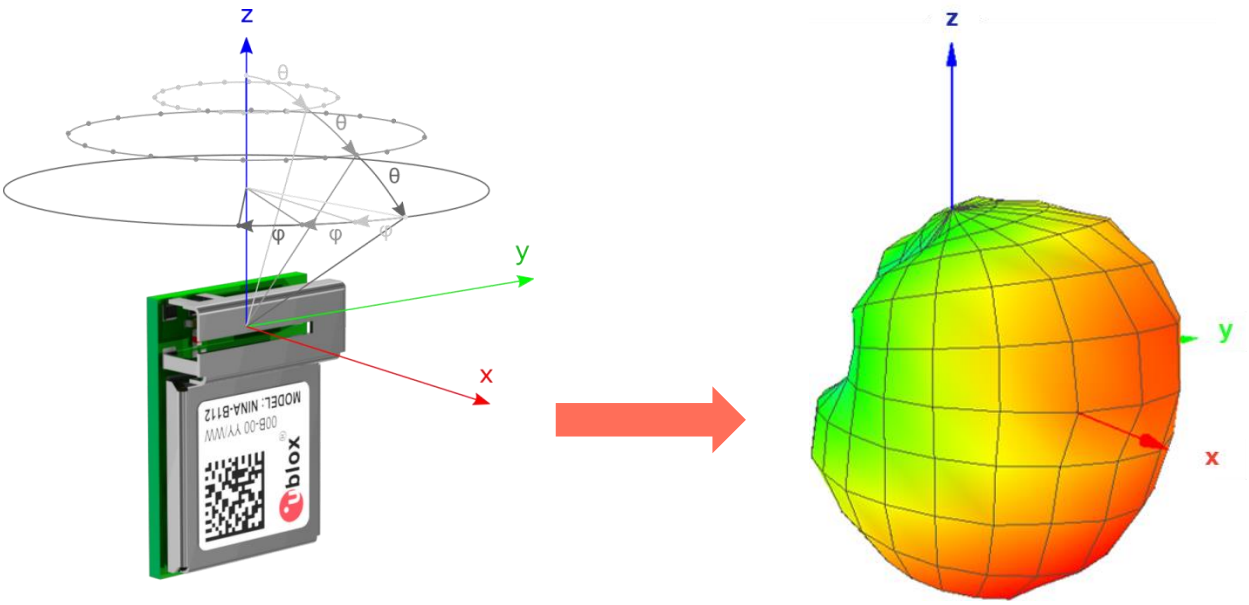

Figure 4: Measurement procedure for radiation patterns

Table 16 shows the displayed radiation patterns of the internal PIFA antenna in NINA-W102.

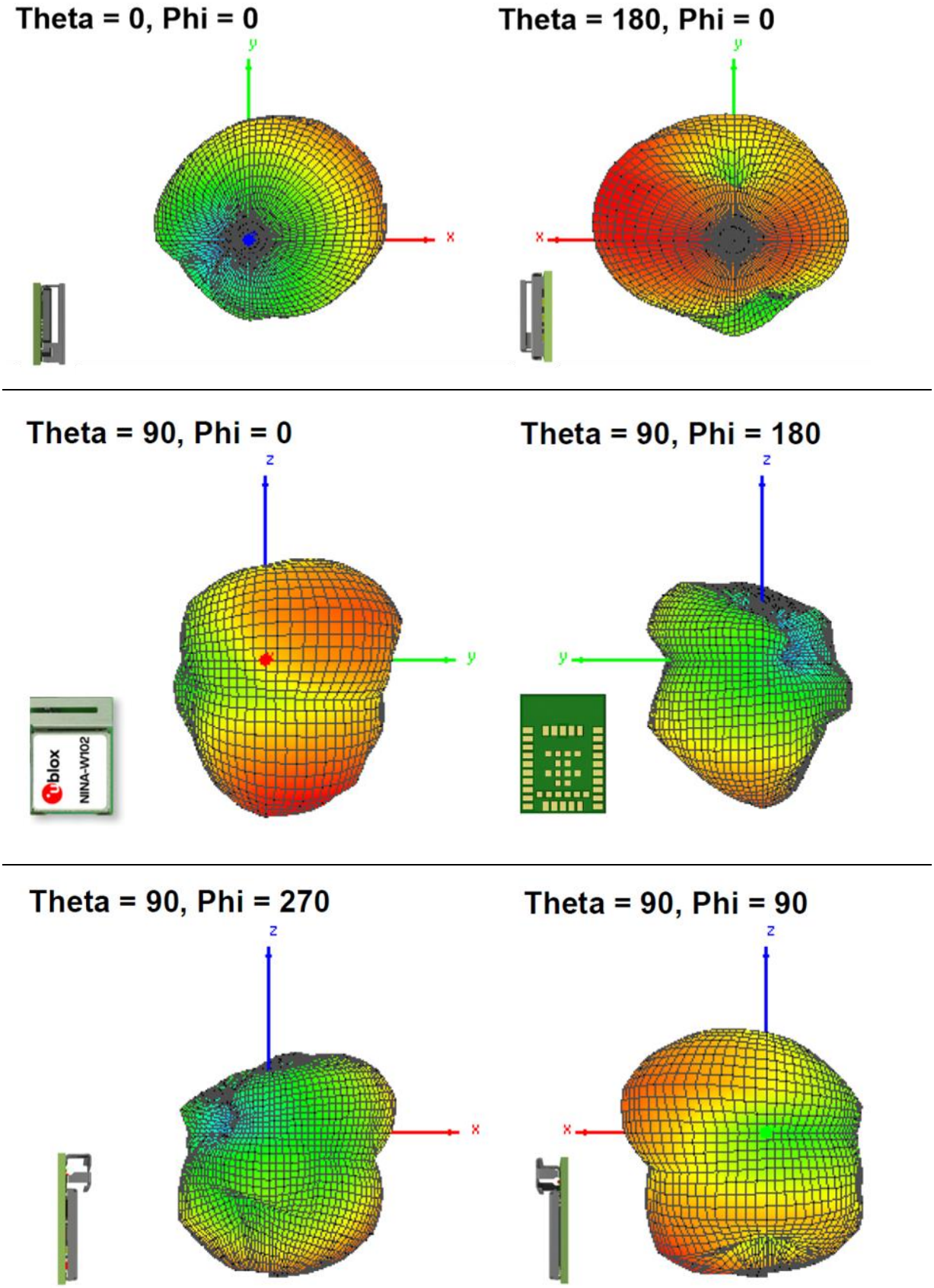

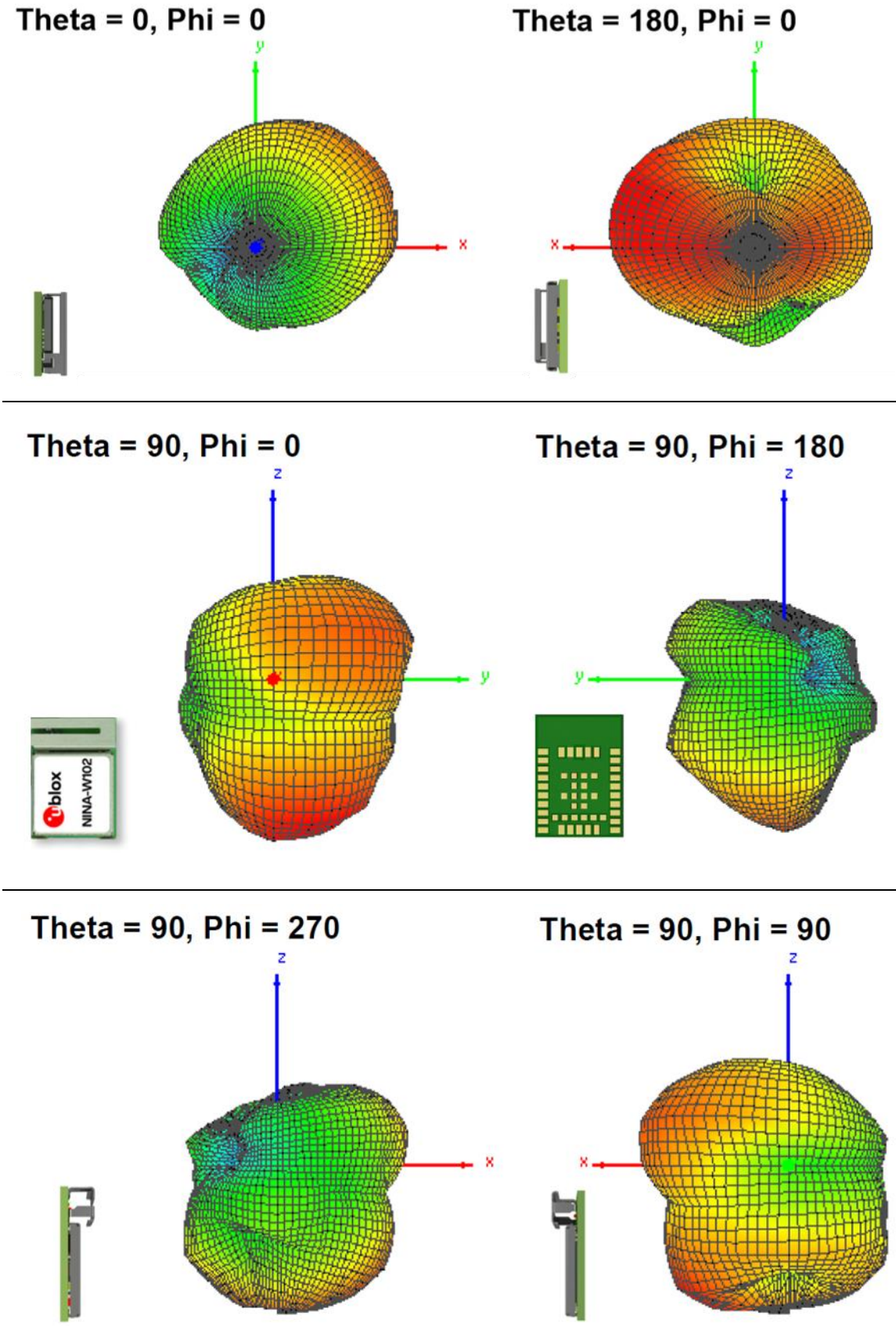

Table 16: NINA-W102 antenna radiation patterns

Table 17 shows the displayed radiation patterns of the internal PCB trace antenna in NINA-W106.

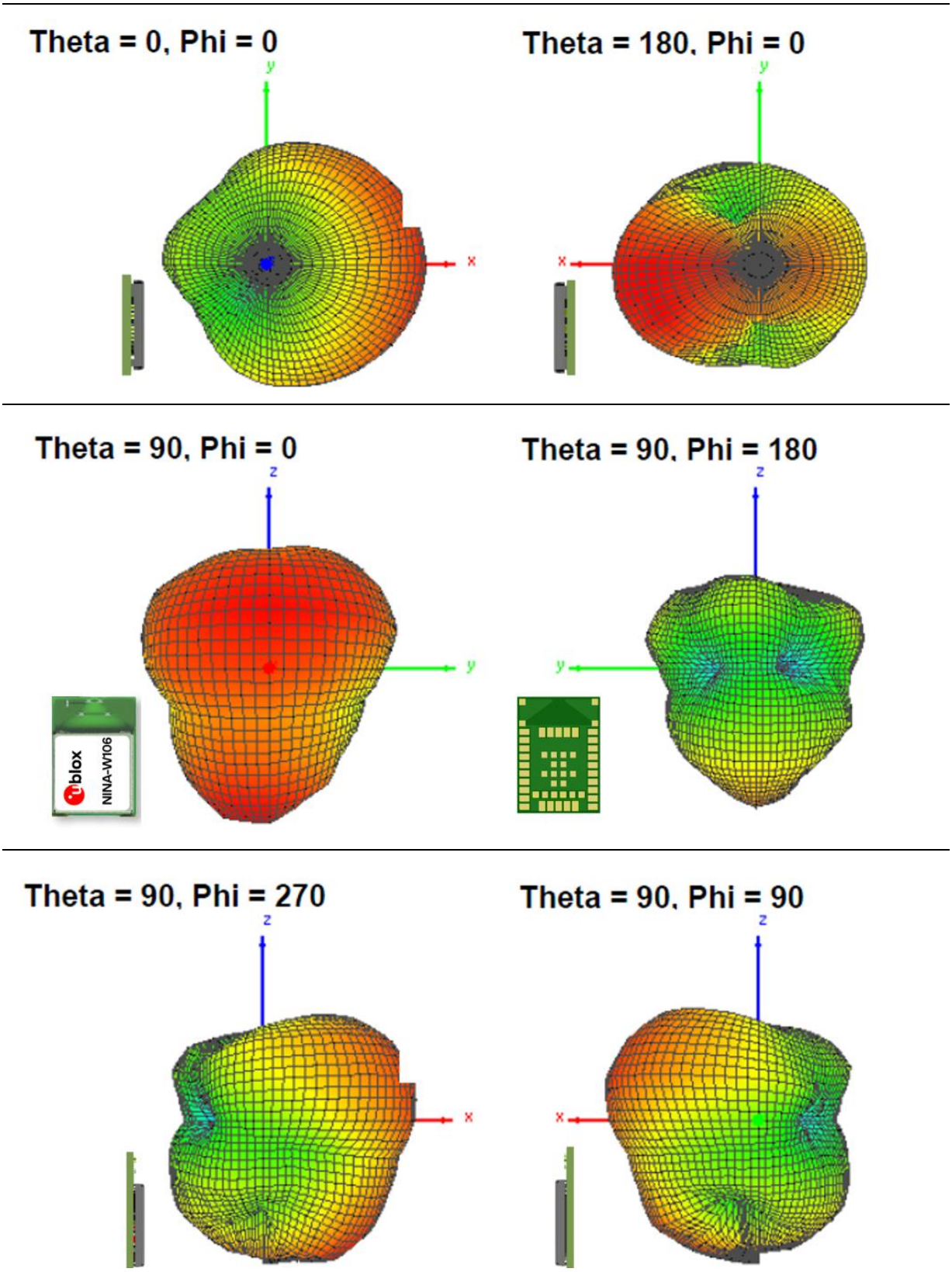

Table 17: NINA-W106 antenna radiation patterns

5 Mechanical specifications

5.1 NINA-W101 mechanical specifications

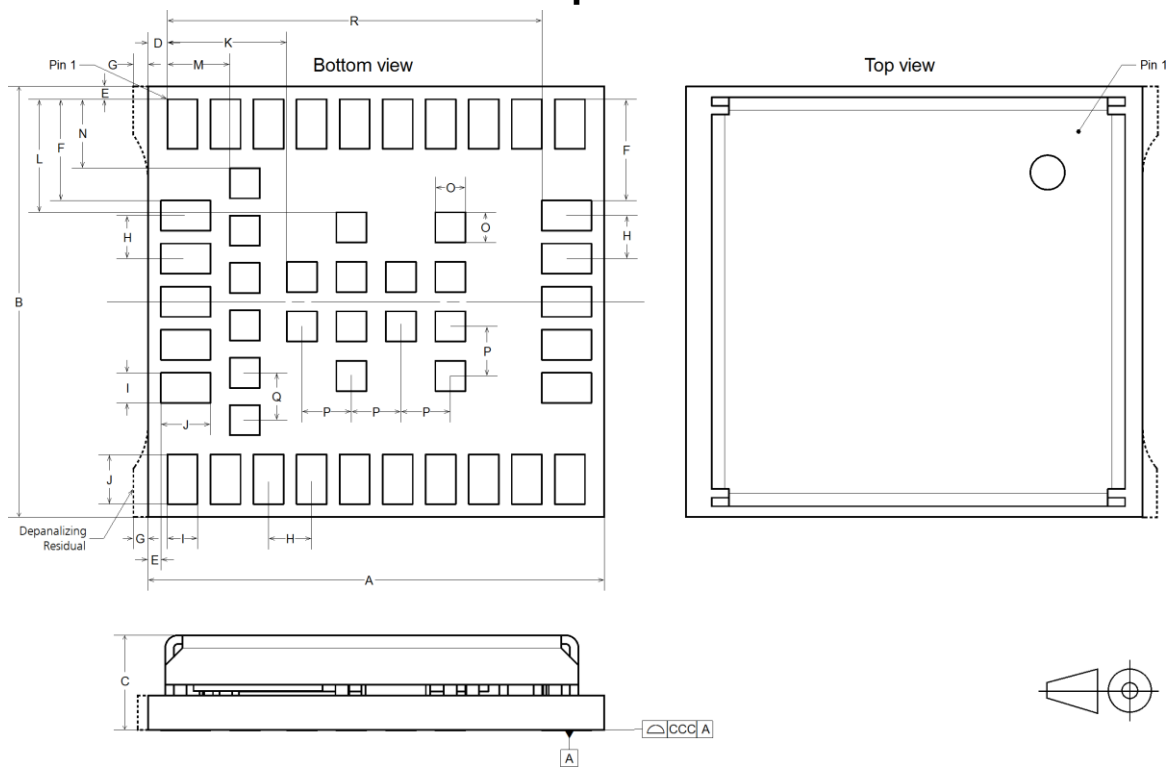

Figure 5: NINA-W101 mechanical outline

Parameter	Description	Typical		Tolerance	
A	Module PCB length [mm]	10.6	(417.3 mil)	+0.20/-0.10	(+7.9/-3.9 mil)
B	Module PCB width [mm]	10.0	(393.7 mil)	+0.20/-0.10	(+7.9/-3.9 mil)
C	Module thickness [mm]	2.2	(86.6 mil)	+0.40/-0.20	(+15.8/-7.9
ccc	Seating plane coplanarity [mm]	0.10	(3.9 mil)	+0.02/-0.10	(+0.8/-3.9 mil)
D	Horizontal edge to lateral pin 1 edge [mm]	0.45	(17.7 mil)	+0.10/-0.10	(+3.9/-3.9 mil)
E	Vertical and horizontal edge to lateral pin 1 [mm]	0.30	(11.8 mil)	+0.10/-0.10	(+3.9/-3.9 mil)
F	Vertical edge to lateral pin 1 [mm]	2.35	(92.5 mil)	+0.05/-0.05	(+2.0/-2.0 mil)
G	Depanalizing residual [mm]	0.10	(3.9 mil)	+0.25/-0.10	(+9.8/-3.9 mil)
H	Lateral and antenna row pin-to-pin pitch [mm]	1.0	(39.4 mil)	+0.05/-0.05	(+2.0/-2.0 mil)
I	Lateral and antenna row pin width [mm]	0.70	(27.6 mil)	+0.05/-0.05	(+2.0/-2.0 mil)
J	Lateral and antenna row pin height [mm]	1.15	(45.3 mil)	+0.05/-0.05	(+2.0/-2.0 mil)
K	Horizontal pin 1 edge to central pin edge [mm]	2.78	(109.4 mil)	+0.05/-0.05	(+2.0/-2.0 mil)
L	Vertical pin 1 edge to central pin edge [mm]	2.63	(103.5 mil)	+0.05/-0.05	(+2.0/-2.0 mil)
M	Horizontal pin 1 edge to inner-row pin edge [mm]	1.45	(57.1 mil)	+0.05/-0.05	(+2.0/-2.0 mil)
N	Vertical pin 1 edge to inner-row pin edge [mm]	1.6	(63.0 mil)	+0.05/-0.05	(+2.0/-2.0 mil)
O	Central pin and inner row width and height [mm]	0.70	(27.6 mil)	+0.05/-0.05	(+2.0/-2.0 mil)
P	Central pin to central pin pitch [mm]	1.15	(45.3 mil)	+0.05/-0.05	(+2.0/-2.0 mil)
Q	Inner row pin-to-pin pitch [mm]	1.1	(43.3 mil)	+0.05/-0.05	(+2.0/-2.0 mil)
R	Horizontal pin 1 edge to antenna row pin edge [mm]	8.7	(342.5 mil)	+0.05/-0.05	(+2.0/-2.0 mil)
	Module weight [g]	<1.0			

Table 18: NINA-W101 mechanical outline data

5.2 NINA-W102 mechanical specifications

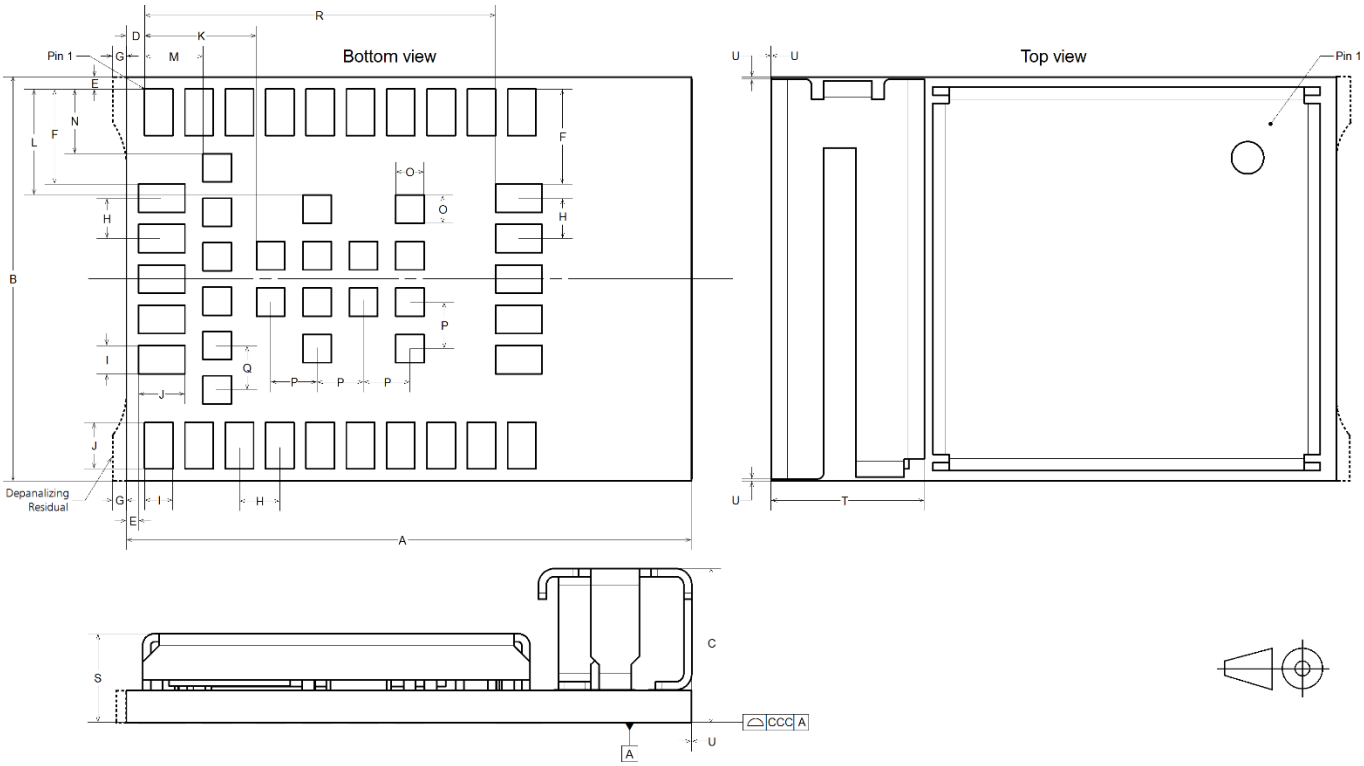

Figure 6: NINA-W102 mechanical outline

Parameter	Description	Typical		Tolerance	
A	Module PCB length [mm]	14.0	(551.2 mil)	+0.20/-0.10	(+7.9/-3.9 mil)
B	Module PCB width [mm]	10.0	(393.7 mil)	+0.20/-0.10	(+7.9/-3.9 mil)
C	Module thickness [mm]	3.8	(149.6 mil)	+0.40/-0.20	(+15.8/-7.9
ccc	Seating plane coplanarity [mm]	0.10	(3.9 mil)	+0.02/-0.10	(+0.8/-3.9 mil)
D	Horizontal edge to lateral pin 1 edge [mm]	0.45	(17.7 mil)	+0.10/-0.10	(+3.9/-3.9 mil)
E	Vertical and horizontal edge to lateral pin 1 edge [mm]	0.30	(11.8 mil)	+0.10/-0.10	(+3.9/-3.9 mil)
F	Vertical pin 1 edge to lateral pin edge [mm]	2.35	(92.5 mil)	+0.05/-0.05	(+2.0/-2.0 mil)
G	Depanalizing residual [mm]	0.10	(3.9 mil)	+0.25/-0.10	(+9.8/-3.9 mil)
H	Lateral and antenna row pin-to-pin pitch [mm]	1.0	(39.4 mil)	+0.05/-0.05	(+2.0/-2.0 mil)
I	Lateral and antenna row pin width [mm]	0.70	(27.6 mil)	+0.05/-0.05	(+2.0/-2.0 mil)
J	Lateral and antenna row pin height [mm]	1.15	(45.3 mil)	+0.05/-0.05	(+2.0/-2.0 mil)
K	Horizontal pin 1 edge to central pin edge [mm]	2.78	(109.4 mil)	+0.05/-0.05	(+2.0/-2.0 mil)
L	Vertical pin 1 edge to central pin edge [mm]	2.63	(103.5 mil)	+0.05/-0.05	(+2.0/-2.0 mil)
M	Horizontal pin 1 edge to inner row pin edge [mm]	1.45	(57.1 mil)	+0.05/-0.05	(+2.0/-2.0 mil)
N	Vertical pin 1 edge to inner-row pin edge [mm]	1.6	(63.0 mil)	+0.05/-0.05	(+2.0/-2.0 mil)
O	Central pin and inner-row width and height [mm]	0.70	(27.6 mil)	+0.05/-0.05	(+2.0/-2.0 mil)
P	Central pin to central pin pitch [mm]	1.15	(45.3 mil)	+0.05/-0.05	(+2.0/-2.0 mil)
Q	Inner row pin-to pin pitch [mm]	1.1	(43.3 mil)	+0.05/-0.05	(+2.0/-2.0 mil)
R	Horizontal pin 1 edge-to-antenna row pin edge [mm]	8.7	(342.5 mil)	+0.05/-0.05	(+2.0/-2.0 mil)
S	PCB and shield cover thickness [mm]	2.2	(86.6 mil)	+0.40/-0.20	(+15.8/-7.9
T	Module PIFA antenna width [mm]	3.8	(149.6 mil)	+0.20/-0.20	(+7.9/-7.9 mil)
U	Antenna overhang outside module outline on any side	0.0	(0.0 mil)	+0.60	(+23.6 mil)
	Module weight [g]	<1.0			

Table 19: NINA-W102 mechanical outline data

5.3 NINA-W106 mechanical specifications

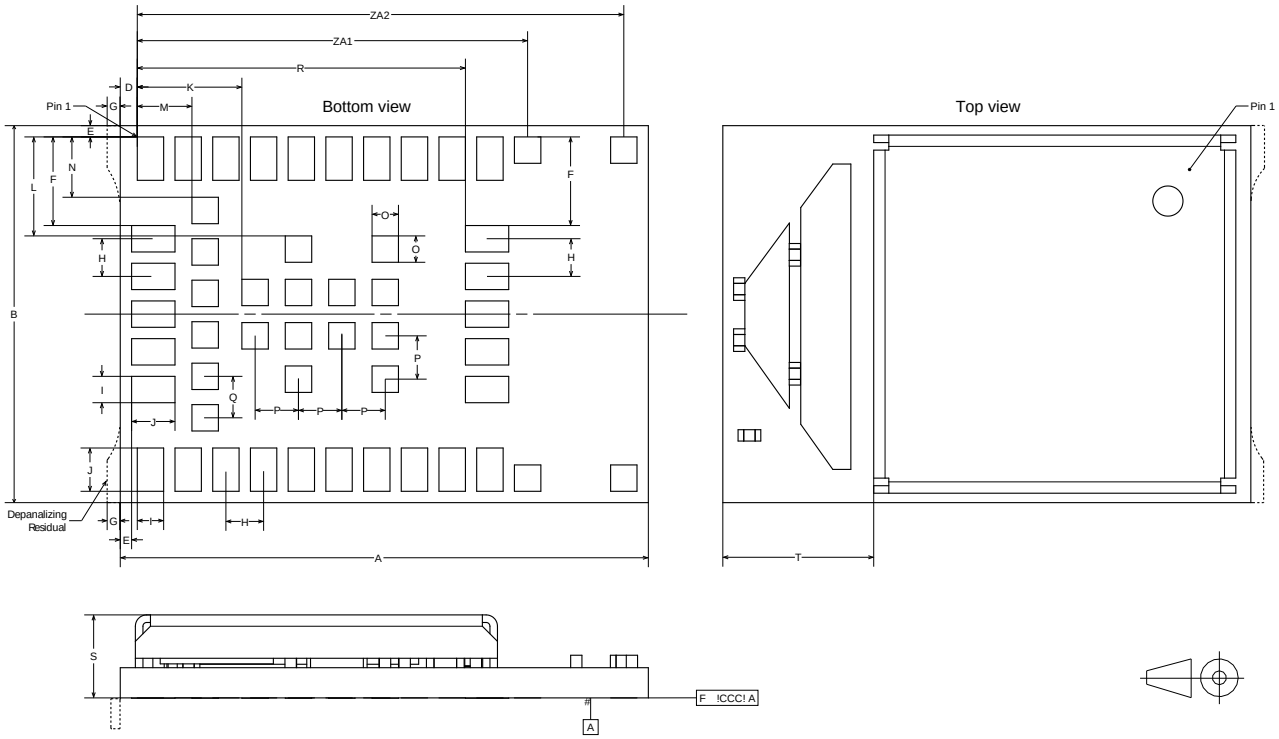

Figure 7: NINA-W106 mechanical outline

Parameter	Description	Typical		Tolerance	
A	Module PCB length [mm]	14.0	(551.2 mil)	+0.20/-0.10	(+7.9/-3.9 mil)
B	Module PCB width [mm]	10.0	(393.7 mil)	+0.20/-0.10	(+7.9/-3.9 mil)
ccc	Seating plane coplanarity [mm]	0.10	(3.9 mil)	+0.02/-0.10	(+0.8/-3.9 mil)
D	Horizontal edge to lateral pin 1 edge [mm]	0.45	(17.7 mil)	+0.10/-0.10	(+3.9/-3.9 mil)
E	Vertical and horizontal edge to lateral pin 1 edge [mm]	0.30	(11.8 mil)	+0.10/-0.10	(+3.9/-3.9 mil)
F	Vertical pin 1 edge to lateral pin edge [mm]	2.35	(92.5 mil)	+0.05/-0.05	(+2.0/-2.0 mil)
G	Depanalizing residual [mm]	0.10	(3.9 mil)	+0.25/-0.10	(+9.8/-3.9 mil)
H	Lateral and antenna row pin-to-pin pitch [mm]	1.0	(39.4 mil)	+0.05/-0.05	(+2.0/-2.0 mil)
I	Lateral and antenna row pin width [mm]	0.70	(27.6 mil)	+0.05/-0.05	(+2.0/-2.0 mil)
J	Lateral and antenna row pin height [mm]	1.15	(45.3 mil)	+0.05/-0.05	(+2.0/-2.0 mil)
K	Horizontal pin 1 edge-to-central pin edge [mm]	2.78	(109.4 mil)	+0.05/-0.05	(+2.0/-2.0 mil)
L	Vertical pin 1 edge-to-central pin edge [mm]	2.63	(103.5 mil)	+0.05/-0.05	(+2.0/-2.0 mil)
M	Horizontal pin 1 edge-to-inner row pin edge [mm]	1.45	(57.1 mil)	+0.05/-0.05	(+2.0/-2.0 mil)
N	Vertical pin 1 edge–to-inner row pin edge [mm]	1.6	(63.0 mil)	+0.05/-0.05	(+2.0/-2.0 mil)
O	Central pin and inner-row width and height [mm]	0.70	(27.6 mil)	+0.05/-0.05	(+2.0/-2.0 mil)
P	Central pin to central pin pitch [mm]	1.15	(45.3 mil)	+0.05/-0.05	(+2.0/-2.0 mil)
Q	Inner-row pin-to-pin pitch [mm]	1.1	(43.3 mil)	+0.05/-0.05	(+2.0/-2.0 mil)
R	Horizontal pin 1 edge-to-antenna row pin edge [mm]	8.7	(342.5 mil)	+0.05/-0.05	(+2.0/-2.0 mil)
S	PCB and shield cover thickness [mm]	2.2	(86.6 mil)	+0.40/-0.20	(+15.8/-7.9
T	Module PCB trace antenna width [mm]	4.0	(157.5 mil)	+0.20/-0.20	(+7.9/-7.9 mil)
ZA1	Horizontal pin 1 corner to first set of antenna GND pins pin center [mm]	10.35	(407.8 mil)	+0.20/-0.10	(+7.9/-3.9 mil)
ZA2	Horizontal pin 1 corner to second set of antenna GND pins pin center [mm]	12.90	(507.9 mil)	+0.20/-0.10	(+7.9/-3.9 mil)
	Module Weight [g]	<1.0			

Table 20: NINA-W106 mechanical outline data

6 Qualification and approvals

6.1 Country approvals

The NINA-W10 module series is certified for use in the following countries/regions:

- Europe (RED)
- USA (FCC)
- Canada (IC)
- Japan (MIC)
- Taiwan (NCC)
- South Korea (KCC)
- Brazil (ANATEL)
- Australia and New Zeeland (ACMA)
- South Africa (ICASA)

See the following sections for additional information.

6.2 European Union regulatory compliance

Information about regulatory compliance of the European Union for NINA-W10 series modules is available in the NINA-W10 Declaration of Conformity [4].

6.2.1 Radio Equipment Directive (RED) 2014/53/EU

The NINA-W10 series modules comply with the essential requirements and other relevant provisions of the Radio Equipment Directive (RED) 2014/53/EU.

6.2.2 Compliance with the RoHS directive

NINA-W10 series modules comply with the Directive 2011/65/EU (EU RoHS 2) and its amendment Directive (EU) 2015/863 (EU RoHS 3).

6.3 FCC/IC Compliance

This device complies with Part 15 of the FCC Rules and with Industry Canada license-exempt RSS standard(s).

6.3.1 Open CPU responsibility and obligations

⚠ Note that the FCC/IC modular transmitter approvals for NINA-W101 and NINA-W102 only allow u-blox AG to integrate the module into an end-product. The integration of the module into an end-product can only be made by the grantee himself. To allow someone else to integrate NINA-W10 into an end-product, u-blox AG will help the integrator to obtain the status as grantee. The status as grantee is obtained by performing a “change in ID”/”Multiple listing”.

The term “Change in ID” relates to § 2.933 of Title 47 of the Code of Federal Regulations (CFR) and the term Multiple listing relates to ESD precautions of the Radio Standards Procedure RSP-100.

Contact u-blox support for more information regarding the “Change in ID”/”Multiple listing” process.

⚠ Modifications NOT explicitly APPROVED by the grantee may cause the module to be non-compliant with the FCC rules part 15 and void the user’s authority to use the equipment.

6.3.1.1 FCC Compliance

The NINA-W10 modules are for OEM integrations only. The end-product will be professionally installed in such manner that only the authorized antennas can be used.

For NINA-W101, an external antenna connector (U.FL. connector) reference design is available and must be followed to comply with the NINA-W10 FCC/IC modular approval. See also the NINA-W1 series system integration manual [1]).

6.3.1.2 FCC statement

This device complies with Part 15 of the FCC Rules. Operation is subject to the following two conditions:

1. This device may not cause harmful interference, and
2. This device must accept any interference received, including interference that may cause undesired operation.
3. This equipment has been tested and found to comply with the limits for a Class B digital device, pursuant to Part 15 of the FCC Rules. These limits are designed to provide reasonable protection against harmful interference in a residential installation. This equipment generates, uses and can radiate radio frequency energy and, if not installed and used in accordance with the instructions, may cause harmful interference to radio communications. However, there is no guarantee that the interference will not occur in a particular installation. If this equipment does cause harmful interference to radio or television reception, which can be determined by turning the equipment off and on, the user is encouraged to try to correct the interference by one or more of the following measures:
    - Reorient or relocate the receiving antenna
    - Increase the separation between the equipment and receiver
    - Connect the equipment into an outlet on a circuit different from that to which the receiver is connected.
    - Consult the dealer or an experienced radio/TV technician for help.

6.3.2 RF-exposure statement

6.3.2.1 IC Compliance

This equipment complies with the requirements of IC RSS-102 issue 5 radiation exposure limits set forth for an uncontrolled environment.

To ensure that the output power remains below the SAR evaluation Exemption limits defined in RSS-102 issue 5, customer applications integrating NINA-W106 must include a separation distance of at least 40 mm between the user (or bystander) and the antenna (or radiating element). For applications integrating NINA-W101 and NINA-W102 the separation distance of 30 mm is needed.

6.3.2.2 FCC Compliance

This device complies with the FCC radiation exposure limits set forth for an uncontrolled environment.

To ensure that the output power remains below the SAR evaluation Exemption limits defined in SAR test exclusion limits in KDB 447498 D01v06, customer applications integrating NINA-W106 must include a separation distance of at least 45 mm between the user (or bystander) and the antenna (or radiating element). For applications integrating NINA-W101 and NINA-W102 the separation distance of 25 mm is needed.

6.3.3 End-product user manual instructions

6.3.3.1 IC Compliance

☞ License-exempt radio devices shall contain the following (or equivalent) notices displayed in a conspicuous location—either in the user manual, on the device, or both:

☞ *This device contains licence-exempt transmitter/receiver that comply with Innovation, Science and Economic Development Canada's licence-exempt RSS(s). Operation is subject to the following two conditions:*

1. *This device may not cause interference; and*
2. *This device must accept any interference, including interference that may cause undesired operation of the device.*

☞ Under Industry Canada regulations, this radio transmitter can only operate using an antenna of a type and maximum (or lesser) gain approved for the transmitter by Industry Canada. To reduce potential radio interference to other users, the antenna type and its gain should be chosen in such a way that the equivalent isotropically radiated power (e.i.r.p.) is not more than that is necessary for successful communication.

Le manuel d'utilisation des appareils radio exempts de licence doit contenir l'énoncé qui suit, ou l'équivalent, à un endroit bien en vue dans le manuel d'utilisation ou sur l'appareil, ou encore aux deux endroits.

L'émetteur/récepteur exempt de licence contenu dans le présent appareil est conforme aux CNR d'Innovation, Sciences et Développement économique Canada applicables aux appareils radio exempts de licence. L'exploitation est autorisée aux deux conditions suivantes:

1. *l'appareil ne doit pas produire de brouillage.*
2. *l'utilisateur de l'appareil doit accepter tout brouillage radioélectrique subi, même si le brouillage est susceptible d'en compromettre le fonctionnement.*

Conformément aux réglementations d'Industry Canada, cet émetteur radio ne peut fonctionner qu'à l'aide d'une antenne dont le type et le gain maximal (ou minimal) ont été approuvés pour cet émetteur par Industry Canada. Pour réduire le 25ecess d'interférences avec d'autres utilisateurs, il faut choisir le type d'antenne et son gain de telle sorte que la puissance isotrope rayonnée équivalente (p.i.r.e) ne soit pas supérieure à celle requise pour obtenir une communication satisfaisante.

6.3.4 End-product labeling requirements

6.3.4.1 IC Compliance

The host product shall be properly labelled to identify the modules within the host product.

The Innovation, Science and Economic Development Canada certification label of a module shall be clearly visible at all times when installed in the host product; otherwise, the host product must be labelled to display the Innovation, Science and Economic Development Canada certification number for the module, preceded by the word "contains" or similar wording expressing the same meaning, as shown in Figure 8.

Le produit hôte devra être correctement étiqueté, de façon à permettre l'identification des modules qui s'y trouvent.

L'étiquette d'homologation d'un module d'Innovation, Sciences et Développement économique Canada devra être posée sur le produit hôte à un endroit bien en vue, en tout temps. En l'absence d'étiquette, le produit hôte doit porter une 25ecessair sur laquelle figure le numéro d'homologation du module d'Innovation, Sciences et Développement économique Canada, précédé du mot « contient », ou d'une formulation similaire allant dans le même sens et qui va comme suit:

This device contains
FCC ID: XPYNINAW10
IC: 8595A-NINAW10

Figure 8 Example of an end product label

☞ NINA-W106 has other IDs, as described in Table 21.

6.3.4.2 FCC Compliance

For an end product that uses the NINA-W1 modules, there must be a label containing, at least, the information shown in Figure 8.

The label must be affixed on an exterior surface of the end product such that it will be visible upon inspection in compliance with the modular approval guidelines developed by the FCC.

☞ In accordance with 47 CFR § 15.19, the end-product shall bear the following statement in a conspicuous location on the device:

This device complies with Part 15 of the FCC Rules. Operation is subject to the following two conditions.

(1) this device may not cause harmful interference, and
(2) this device must accept any interference received, including interference that may cause undesired operation.

When the device is so small or for such use that it is not practicable to place the statement above on it, the information shall be placed in a prominent location in the instruction manual or pamphlet supplied to the user or, alternatively, shall be placed on the container in which the device is marketed.

In case, where the final product will be installed in locations where the end-user is not able to see the FCC ID and/or this statement, the FCC ID and the statement shall also be included in the end-product manual.

Model	FCC ID	ISED certification number
NINA-W101	XPYNINAW10	8595A-NINAW10
NINA-W102	XPYNINAW10	8595A-NINAW10
NINA-W106	XPYNINAW106	8595A-NINAW106

Table 21: FCC and ISED Certification Number for the NINA-W10 series modules

6.3.5 End-product compliance

6.3.5.1 General requirements

- Any changes to hardware, hosts or co-location configuration may require new radiated emission and SAR evaluation and/or testing.
- The regulatory compliance of NINA-W101, NINA-W102 and NINA-W106 modules does not exempt the end-product from being evaluated against applicable regulatory demands; for example, FCC Part 15B criteria for unintentional radiators.

- Only authorized antenna(s) may be used.
- Any notification to the end user about how to install or remove the integrated radio module is NOT allowed.

6.3.5.2 Co-location (simultaneous transmission)

If the module is to be co-located with another transmitter, additional measurements for simultaneous transmission are required.

6.4 Japan radio equipment compliance

204-810001

Figure 9: Giteki mark, R, and the NINA-W101/NINA-W102 MIC certification number

203-JN1166

Figure 10: Giteki mark, R, and the NINA-W106 MIC certification number

For information about compliance of the NINA-W101/NINA-W102/NINA-W106 modules with the Giteki certification, see the NINA-W1 series system integration manual [1].

6.5 NCC Taiwan compliance

6.5.1 Taiwan NCC Warning Statement

- 經型式認證合格之低功率射頻電機，非經許可，公司、商號或使用者均不得擅自變更頻率、 加大功率或變更原設計之特性及功能。
- 低功率射頻電機之使用不得影響飛航安全及干擾合法通信；經發現有干擾現象時，應立即停用，並改善至無干擾時方得繼續使用。前項合法通信，指依電信法規定作業之無線電通信。低功率射頻電機須忍受合法通信或工業、科學及醫療用電波輻射性電機設備之干擾。

Statement translation:

- Without permission granted by the NCC, any company, enterprise, or user is not allowed to change frequency, enhance transmitting power or alter original characteristic as well as performance to an approved low power radio-frequency devices.
- The low power radio-frequency devices shall not influence aircraft security and interfere legal communications; If found, the user shall cease operating immediately until no interference is achieved. The said legal communications means radio communications is operated in compliance with the Telecommunications Act. The low power radio-frequency devices must be susceptible with the interference from legal communications or ISM radio wave radiated devices.

6.5.2 NINA-W101 labeling requirements for end product

When a product integrated with an NINA-W101 module is placed on the Taiwan market, the product must be affixed with a label marking as shown below. The label can use wording such as the following:

Contains Transmitter Module

內含發射器模組: CCAJ18LP0B40T1

Any similar wording that expresses the same meaning may also be used. The marking must be visible for inspection.

6.5.3 NINA-W102 labeling requirements for end product

When a product integrated with a NINA-W102 module is placed on the Taiwan market, the product must be affixed with a label marking as shown below. The label can use wording such as the following:

Contains Transmitter Module

內含發射器模組: CCAJ18LP0B50T1

Any similar wording that expresses the same meaning may also be used. The marking must be visible for inspection.

6.5.4 NINA-W106 labeling requirements for end product

When a product integrated with a NINA-W106 module is placed on the Taiwan market, the product must be affixed with a label marking as shown below. The label can use wording such as the following:

Contains Transmitter Module

內含發射器模組: CCAI21Y10090T1

Any similar wording that expresses the same meaning may also be used. The marking must be visible for inspection.

6.6 KCC South Korea compliance

The NINA-W10 series modules are certified by the Korea Communications Commission (KCC).

When a product containing a NINA-10 module is placed on the South Korean market, the product must be affixed with a label or marking containing the KCC logo and certification number shown in the figures below. This information must also be included in the products user manuals. NINA-W106 has a different certification number then NINA-W101 and NINA-W102.

R-C-ULX-NINA-W106

NINA-W106 certification number.

R-C-ULX-NINA-W151

NINA-W151 and NINA-W152 certification number.

The height of the KCC logo must be at least 5 mm.

6.7 Brazil compliance

When a product containing the NINA-W10 modules is placed on the Brazilian market, the product must be affixed with a label or marking containing the Anatel logo, NINA-W101/ NINA-W102 Homologation number: 06870-18-05903 or NINA-W106 Homologation number: 05099-21-01056 and a statement claiming that the device may not cause harmful interference but must accept it (Resolution No 506).

ANATEL
06870-18-05903

Figure 11: Anatel logo and Homologation number for NINA-W101 and NINA-W102.

ANATEL
05099-21-01056

Figure 12: Anatel logo and Homologation number for NINA-W106.

"Este equipamento opera em caráter secundário, isto é, não tem direito a proteção contra interferência prejudicial, mesmo de estações do mesmo tipo, e não pode causar interferência a sistemas operando em caráter primário."

Statement translation:

"This equipment operates on a secondary basis and, consequently, must accept harmful interference, including from stations of the same kind, and may not cause harmful interference to systems operating on a primary basis."

When the device is so small or for such use that it is not practicable to place the statement above on it, the information shall be placed in a prominent location in the instruction manual or pamphlet supplied to the user or, alternatively, shall be placed on the container in which the device is marketed.

In case, where the final product will be installed in locations where the end user is unable to see the Anatel logo, NINA-W10 Homologation number and/or this statement, the Anatel logo, NINA-W10 Homologation number, and the statement shall also be included in the end product manual.

6.8 Australia and New Zealand regulatory compliance

The NINA-W101, NINA-W102 and NINA-W106 modules are compliant with the standards made by the Australian Communications and Media Authority (ACMA).

The modules are compliant with AS/NZS 4268:2012 standard – Radio equipment and systems – Short range devices – Limits and methods of standard measurement. The NINA-W101, NINA-W102 and NINA-W106 modules test reports can be used as part of the product certification and compliance folder. For more information on the test reports, contact your local support team.

To meet overall Australian and/or New Zealand end product compliance, the integrator must create a compliance folder containing all the relevant compliance test reports such as RF, EMC, electrical safety and DoC (Declaration of Conformity) and so on. It is the responsibility of the integrator to know what is required in the compliance folder for ACMA compliance.

For more information on Australia compliance, refer to the Australian Communications and Media Authority web site http://www.acma.gov.au/.

For more information on New Zealand compliance, refer to the New Zealand Radio Spectrum Management Group web site www.rsm.govt.nz.

6.9 South Africa regulatory compliance

NINA-W101, NINA-W102 and NINA-B106 modules are compliant and certified by the Independent Communications Authority of South Africa (ICASA). End products that are made available for sale or lease or is supplied in any other manner in South Africa shall have a legible label permanently affixed to its exterior surface. The label shall have the ICASA logo and the ICASA issued license number as shown in Figure 13 and Figure 14. The minimum width and height of the ICASA logo shall be 3 mm. The approval labels must be purchased by the customer's local representative directly from the approval authority ICASA. A sample of a NINA-W101/NINA-W102/NINA-W106 ICASA label is included below:

Figure 13: NINA-W101 and NINA-W102 ICASA label example

Figure 14 : NINA-W106 ICASA label example

More information on registration as a Responsible Integrator and labeling requirements can be found on the ICASA website: https://www.icasa.org.za

6.10 Safety Compliance

In order to fulfill the safety standard EN 60950-1, the NINA-W10 series modules must be supplied with a Class-2 Limited Power Source.

6.11 Bluetooth qualification information

End products are required to be qualified and listed for the Bluetooth Special Interest Group (SIG).

Product declarations are submitted through the SIG Bluetooth Launch Studio website.

NINA-W101, NINA-W102 and NINA-W106 modules are qualified as a Controller Subsystem in accordance with the Bluetooth 4.2 specification and are registered with the SIG Qualified Design IDs (QDID) shown in Table 22.

To list your product that integrates NINA-W101, NINA-W102 or NINA-W106 as an End product (with no additional testing required), combine the QDID for the Bluetooth stack implemented in the Host Subsystem with the QDID of the pre-qualified Controller Subsystem shown in Table 22.

Model	Product type	QDID	Listing date
NINA-W101, NINA-W102	Controller Subsystem	QDID 107058	14-Mar-2018
NINA-W106	Controller Subsystem	QDID 152314	17-Dec-2020

Table 22: NINA-W101/NINA-W102/NINA-W106 Bluetooth QDID

☞ The Espressif IoT development framework for ESP32 (ESP-IDF) currently supports two host Bluetooth stacks: Bluedroid (QDID 115966) for classic Bluetooth as well as Bluetooth LE, and Apache NimBLE (QDID 1311934) for Bluetooth LE only. For further listing information, search the Bluetooth Launch Studio website.

7 Antennas

This chapter provides s an overview of the different external antennas that can be used together with the module.

⚠ This radio transmitter IC: 8595A-NINAW10 has been approved by Industry Canada to operate with the antenna types listed below with the maximum permissible gain and required antenna impedance for each antenna type indicated. Antenna types not included in this list, having a gain greater than the maximum gain indicated for that type, are strictly prohibited for use with this device.

⚠ Cet émetteur radio IC: 8595A-NINAW10 été approuvé par Industry Canada pour fonctionner avec les types d'antenne énumérés ci-dessous avec le gain maximum autorisé et l'impédance 39ecessaire pour chaque type d'antenne indiqué. Les types d'antenne ne figurant pas dans cette liste et ayant un gain supérieur au gain maximum indiqué pour ce type-là sont strictement interdits d'utilisation avec cet appareil.

For each antenna, the "Approvals" field defines in which test reports the antenna is included. Definitions of the «Approvals» field are:

- FCC – The antenna is included in the FCC test reports and thus approved for use in countries that accept the FCC radio approvals, primarily US.
- IC – The antenna is included in the IC (Industrie Canada) test reports and thus approved for use in countries that accept the IC radio approvals, primarily Canada.
- RED – The antenna is included in the ETSI test reports and thus approved for use in countries that accept the Radio Equipment Directive, primarily the European countries.
- MIC – The antenna is included in the Japanese government affiliated MIC test reports and thus approved for use in the Japanese market.
- NCC – The antenna is included in the Taiwan NCC test reports and thus approved for use in Taiwan.
- KCC - The antenna is included in the Korea KCC test reports and thus approved for use in Korea.
- ANATEL – The antenna is included in the Brazil Anatel test reports and thus approved for use in Brazil.
- ACMA – The antenna is included in the Australia and New Zealand test reports and thus approved for use in Australia and New Zealand.
- ICASA – The antenna is included in the South Africa ICASA test reports and thus approved for use in South Africa.

In general, antennas with SMD connection, Reverse Polarity SMA connector or U.FL connector are included in FCC, IC, RED, MIC, NCC, KCC, ANATEL, ACMA and ICASA radio tests. The antennas with SMA connector are included in RED, MIC, NCC, KCC, ANATEL, ACMA and ICASA radio tests but not in the FCC or IC due to FCC/IC regulations.

The external antennas are connected to the board through U.FL connectors. Some antennas are connected directly to the U.FL connector of the board while some are connected using an SMA or reversed polarity SMA connector through a short U.FL to SMA or reversed polarity SMA adapter cable.

7.1 Antenna accessories

Name	U.FL to SMA adapter cable
Connector	U.FL and SMA jack (outer thread and pin receptacle)
Impedance	50 Ω
Minimum cable loss	0.5 dB, The cable loss must be above the minimum cable loss to meet the regulatory requirements. Minimum cable length 100 mm.
Comment	The SMA connector can be mounted in a panel. See NINA-W1 series system integration manual [1] for information how to integrate the U.FL connector.
Approval	RED, MIC, NCC, KCC, ANATEL, ACMA and ICASA

Name	U.FL to Reverse Polarity SMA adapter cable
Connector	U.FL and Reverse Polarity SMA jack (outer thread and pin)
Impedance	50 Ω
Minimum cable loss	0.5 dB, The cable loss must be above the minimum cable loss to meet the regulatory requirements. Minimum cable length 100 mm.
Comment	The Reverse Polarity SMA connector can be mounted in a panel. See NINA-W1 series system integration manual [1] for information how to integrate the U.FL connector. This reference design must be followed to comply with the NINA–W1 FCC/IC modular approvals.
Approval	FCC, IC, RED, MIC, NCC, KCC, ANATEL, ACMA and ICASA

7.2 Approved antennas

7.2.1 Single band antennas

NINA-W102	
Manufacturer	Abracon
Gain	+3 dBi
Impedance	50 Ω
Size (HxWxL)	3.0 x 3.8 x 9.9 mm
Type	PIFA
Comment	SMD PIFA antenna on NINA-W102. Should not be mounted inside a metal enclosure. See also Internal antenna.
Approval	FCC, IC, RED, MIC, NCC, KCC, ANATEL, ACMA and ICASA

NINA-W106	
Manufacturer	Abracon
Gain	+3 dBi
Impedance	N/A
Size (HxWxL)	1.1 x 3.4 x 10 mm
Type	PCB trace
Comment	PCB antenna on NINA-W106. Should not be mounted inside a metal enclosure. See also Internal antenna.
Approval	FCC, IC, RED, MIC and ACMA

GW.26.0111	
Manufacturer	Taoglas
Polarization	Vertical
Gain	+2.0 dBi
Impedance	50 Ω
Size	Ø 7.9 x 30.0 mm
Type	Monopole
Connector	SMA (M) .
Comment	To be mounted with a U.FL to SMA adapter cable.
Approval	RED, MIC, NCC, KCC, ANATEL, ACMA and ICASA

ANT-2.4-CW-RH-RPS	
Manufacturer	Linx
Polarization	Vertical
Gain	-1.0 dBi
Impedance	50 Ω
Size	Ø 7.4 x 27.0 mm
Type	Monopole
Connector	Reverse Polarity SMA plug (inner thread and pin receptacle).
Comment	To be mounted with a U.FL to SMA adapter cable. An SMA version antenna is also available but not recommended for use (ANT-2.4-CW-RH-SMA).
Approval	FCC, IC, RED, MIC, NCC, KCC, ANATEL, ACMA and ICASA

Wi-Fi external antenna, PN PRO-EX-348	
Manufacturer	Abracon
Polarization	Vertical
Gain	+3.0 dBi
Impedance	50 Ω
Size	Ø 12.0 x 28.0 mm
Type	Monopole
Connector	Reverse Polarity SMA plug (inner thread and pin receptacle).
Comment	The antenna adapter cable UF.L part must be mounted on a metal ground plane for best performance. To be mounted with a U.FL to SMA adapter cable. An SMA version antenna is also available but not recommended for use (Ex-It 2400 28 SMA).
Approval	FCC, IC, RED, MIC, NCC, KCC, ANATEL, ACMA, and ICASA Original part number at certification: Ex-IT 2400 RP-SMA 28-001)

Wi-Fi / Bluetooth external antenna, PN PRO-EX-296	
Manufacturer	Abracon
Polarization	Vertical
Gain	+2.0 dBi
Impedance	50 Ω
Size	Ø 12.0 x 28.0 mm
Type	Monopole
Cable length	100 mm
Connector	U.FL. connector
Comment	This antenna requires to be mounted on a metal ground plane for best performance. To be mounted with a U.FL connector. See NINA-W10 series system integration manual [1] for information how to integrate the U.FL connector. This reference design must be followed to comply with the NINA–W1 FCC/IC modular approvals.
Approval	FCC, IC, RED, MIC, NCC, KCC, ANATEL, ACMA and ICASA Original part number at certification: Ex-IT 2400 MHF 28)

Wi-Fi / Bluetooth / Bluetooth LE external whip antenna, PN PRO-EX-333	
Manufacturer	Abracon
Polarization	Vertical
Gain	+3.0 dBi
Impedance	50 Ω
Size	Ø 10 x 83 mm
Type	Monopole
Connector	Reverse Polarity SMA plug (inner thread and pin receptacle)
Comment	To be mounted with a U.FL to Reverse Polarity SMA adapter cable. An SMA version antenna is also available but not recommended for use (PN PRO-EX-332).
Approval	FCC, IC, RED, MIC, NCC, KCC, ANATEL, ACMA and ICASA Original part number at certification: Ex-IT 2400 RP-SMA 70-002)

Wi-Fi / Bluetooth external whip antenna, PN PRO-EX-327	
Manufacturer	Abracon
Polarization	Vertical
Gain	+3.0 dBi
Impedance	50 Ω
Size	Ø 9.4 x 70.5 mm
Type	Monopole
Cable length	100 mm
Connector	U.FL. connector
Comment	To be mounted with a U.FL connector. See NINA-W1 series system integration manual [1] for information how to integrate the U.FL connector. Ths reference design must be followed this reference design to comply with the NINA-W1 FCC/IC modular approvals.
Approval	FCC, IC, RED, MIC, NCC, KCC, ANATEL, ACMA and ICASA Original part number at certification: Ex-IT 2400 MHF 70-001)

Wi-Fi / Bluetooth / Bluetooth LE board antenna, PN PRO-IS-237	
Manufacturer	Abracon
Gain	+3.0 dBi
Impedance	50 Ω
Size	27 x 12 mm (triangular)
Type	Patch
Cable length	100 mm
Connector	U.FL. connector
Comment	Should be attached to a plastic enclosure or part for best performance. To be mounted with a U.FL connector. See NINA-W1 series system integration manual [1] for information how to integrate the U.FL connector. This reference design must be followed to comply with the NINA–W1 FCC/IC modular approvals.
Approval	FCC, IC, RED, MIC, NCC, KCC, ANATEL, ACMA and ICASA

7.2.2 Dual-band antennas

Wi-Fi / Bluetooth / Bluetooth LE board antenna, PN PRO-IS-299	
Manufacturer	Abracon
Gain	+3.0 dBi
Impedance	50 Ω
Size	27 x 12 mm (triangular)
Type	Patch
Cable length	100 mm
Connector	U.FL. connector
Comment	Should be attached to a plastic enclosure or part for best performance. Dual-band (2.4 GHz / 5 GHz) antenna to be mounted with a U.FL connector. See NINA-W1 series system integration manual [1] for information how to integrate the U.FL connector. This reference design must be followed to comply with the NINA–W1 FCC/IC modular approvals.
Approval	FCC, IC, RED, MIC, NCC, KCC, ANATEL, ACMA and ICASA

Wi-Fi / Bluetooth / Bluetooth LE board antenna, PN PRO-IS-432	
Manufacturer	Abracon
Gain	+3.0 dBi
Impedance	50 Ω
Size	24x22x1 mm with mounting hole
Type	Patch
Cable length	100 mm
Connector	U.FL. connector
Comment	Should be attached to a plastic enclosure or part for best performance. Dual-band (2.4 GHz / 5 GHz) antenna to be mounted with a U.FL connector. See NINA-W1 series system integration manual [1] for information on how to integrate the U.FL connector. This reference design must be followed to comply with the NINA-W1 FCC/IC modular approvals.
Approval	FCC, IC, RED, MIC, NCC, KCC, ANATEL, ACMA and ICASA

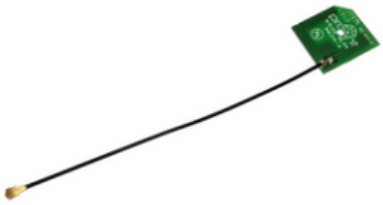

Wi-Fi / Bluetooth exernal whip antenna, PN PRO-EX-286	
Manufacturer	Abracon
Polarization	Vertical
Gain	+3 dBi
Impedance	50 Ω
Size	107 mm (Straight)
Type	Monopole
Connector	Reverse Polarity SMA plug (inner thread and pin receptacle)
Comment	To be mounted with a U.FL to Reverse Polarity SMA adapter cable.
Approval	FCC, IC, RED, MIC, NCC, KCC, ANATEL, ACMA and ICASA Original part number at certification: Ex-IT WLAN RPSMA)

8 Product handling

8.1 Packaging

To enable efficient production, lot set-up, and tear-down, NINA-W10 series modules are delivered as hermetically sealed, reeled tapes. For more information about packaging, see also the Packaging information reference [2].

8.1.1 Reels

NINA-W1 modules are delivered in quantities of 500 pieces on a reel. Table 23 shows the reel types for NINA-W10 modules as they are delivered on tape. See also the Packaging information guide [2].

Model	Reel type
NINA-W101	B
NINA-W102	A
NINA-W106	A

Table 23: Reel types for different NINA-W10 series modules

8.1.2 Tapes

Figure 15 and Figure 16 show the position and orientation of the NINA-W10 module variants s as they are delivered on tape.

Feed

Figure 15: NINA-W101 module on tape orientation

Feed

Figure 16: NINA-W102/NINA-W106 module on tape orientation

The dimensions of the tapes are specified in Figure 17.

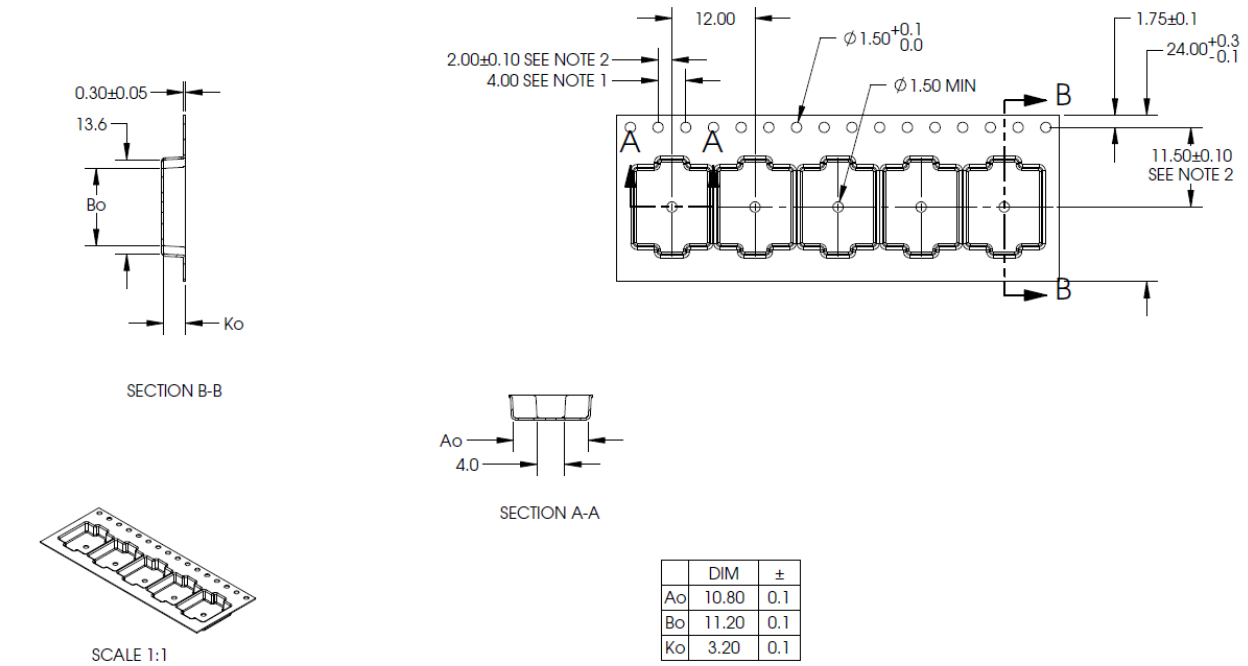

	DIM	±
Ao	10.80	0.1
Bo	11.20	0.1
Ko	3.20	0.1

NOTES:
1. 10 SPROCKET HOLE PITCH CUMULATIVE TOLERANCE ±0.2
2. POCKET POSITION RELATIVE TO SPROCKET HOLE MEASURED AS TRUE POSITION OF POCKET, NOT POCKET HOLE.
3. Ao AND Bo ARE MEASURED ON A PLANE AT A DISTANCE "R" ABOVE THE BOTTOM OF THE POCKET.

Figure 17: NINA-W101 tape dimensions

The dimensions of the tapes are specified in Figure 18.

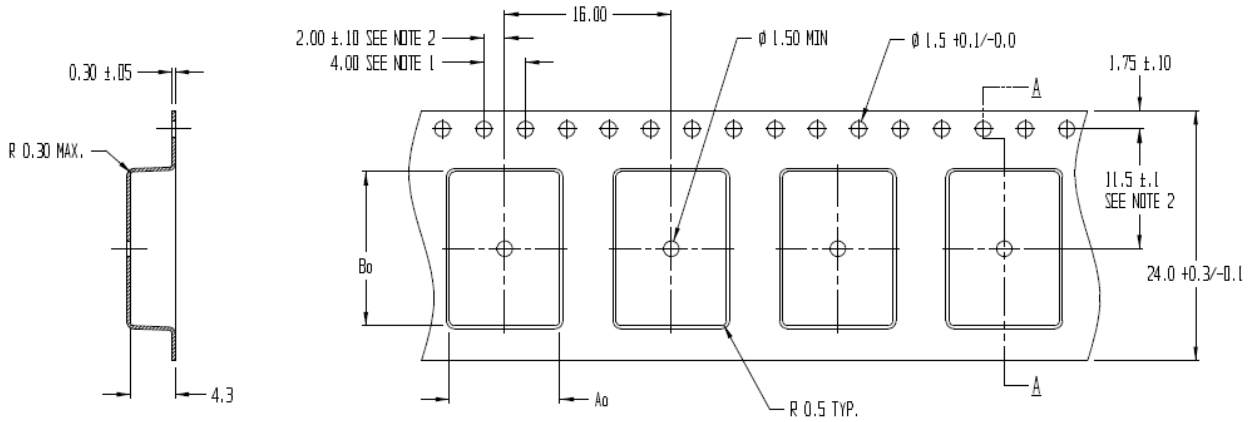

Ao = 10.6
Bo = 14.8
Ko = 4.3

NOTES:
1. 10 SPROCKET HOLE PITCH CUMULATIVE TOLERANCE ±0.2
2. POCKET POSITION RELATIVE TO SPROCKET HOLE MEASURED AS TRUE POSITION OF POCKET, NOT POCKET HOLE
3. Ao AND Bo ARE CALCULATED ON A PLANE AT A DISTANCE "R" ABOVE THE BOTTOM OF THE POCKET.

Figure 18: NINA-W102/NINA-W106 tape dimensions

8.2 Moisture sensitivity levels

⚠ NINA-W10 series modules are rated as MSL Level 4 devices in accordance with the IPC/JEDEC J-STD-020 standard. For detailed information, see the moisture sensitive warning label on the MBB (Moisture Barrier Bag).

After opening the dry pack, the modules must be mounted within 72 hours in factory conditions of maximum 30 °C/60%RH or must be stored at less than 10%RH. The modules require baking if the humidity indicator card shows more than 10% when read at 23±5 °C or if the conditions mentioned above are not met. For information about the bake procedure, see also the J-STD-033B standard.

For more information regarding MSL (Moisture Sensitivity Level), labeling, and storage, see also the Packaging information guide [2].

☞ For MSL standards, see IPC/JEDEC J-STD-020, which can be downloaded from www.jedec.org.

8.3 Reflow soldering

NINA-W1 series modules are approved for two reflow cycles.

⚠ Reflow soldering profiles must be selected in accordance with u-blox soldering recommendations described in the system integration manual [1]. Failure to observe these recommendations can result in severe damage to the product.

8.4 ESD precautions

⚠ NINA-W10 series modules are Electrostatic Sensitive Devices that demand the observance of special handling precautions against static damage. Failure to observe these precautions can result in severe damage to the product.

Proper ESD handling and packaging procedures must be applied throughout the processing, handling, and operation of any application that incorporates NINA-W10 series modules. ESD precautions should be implemented on the application board where the module is mounted.

For further information about the handling of NINA-W10 series modules, see also the NINA-W10 system integration manual [1].

9 Labeling and ordering information

9.1 Product labeling

The labels (7.5 x 7.5 mm) of the NINA-W10 series modules include important product information.

Figure 19 shows the label applied to NINA-W10 series modules. Each of the given label references are described in Table 24.

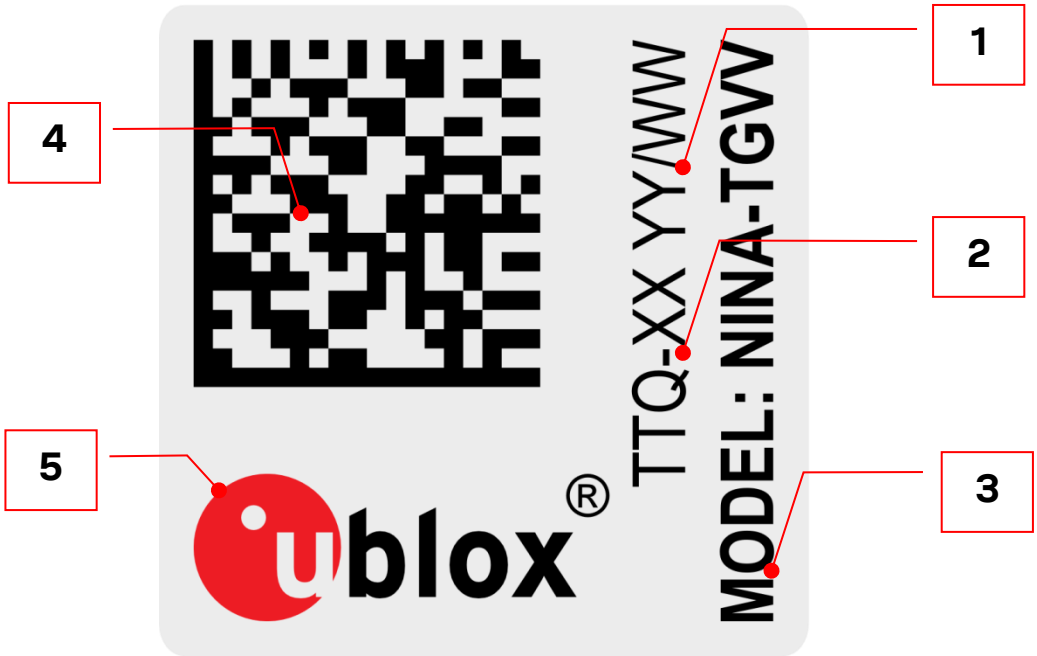

Figure 19: Location of product type number on the NINA-W10 series module label

Reference	Description
1	Date of unit production encoded YY/WW (year, week)
2	Major and minor product version info
3	Model name (NINA-W101, NINA-W102 or NINA-W106). This is the same as the product name.
4	Data Matrix with unique serial number comprising 19 alphanumeric symbols: - The first 3 symbols are used for production tracking and are an abbreviated representation of the Type number that is unique to each module variant. - The following 12 symbols represent the unique hexadecimal Bluetooth address of the module AABBCCDDEEFF, and The last 4 symbols represent the hardware and firmware version encoded HHFF.
5	u-blox logo. The red dot also indicates pin 1.

Table 24: NINA-W10 series label description

9.2 Product identifiers

Table 25 describes the three product identifiers, namely the Type number, Model name and Ordering code.

Format	Description	Nomenclature
Model name	Describes the form factor, platform technology and platform variant. Used mostly in product documentation like this data sheet, the model name represents the most common identity for all u-blox products	PPPP-TGVV
Ordering code	Comprises the model name – with additional identifiers to describe the major product version and quality grade	PPPP-TGVV-TTQ
Type number	Comprises the model name and ordering code – with additional identifiers to describe minor product versions.	PPPP -TGVV-TTQ-XX

Table 25: Product code formats

9.3 Identification codes

Table 26 describes the individual identification codes represented in each product identifier.

Code	Meaning	Example
PPPP	Form factor	NINA
TG	Platform (Technology and Generation) T – Dominant technology, For example, W: Wi-Fi, B: Bluetooth G – Generation	W1: Wi-Fi Generation 1
VV	Variant based on the same platform; range [00…99]	01: product with antenna pin
TT	Major Product Version	00: first revision
Q	Quality grade A: Automotive B: Professional C: Standard	B: professional grade
XX	Minor product version (not relevant for certification)	Default value is 00

Table 26: Part identification code

9.4 Ordering information

Ordering code	Product
NINA-W101-01B	Module with antenna pin. Open CPU version. Using ESP32-D0WDQ6-V3. Flash 16Mbit.
NINA-W102-01B	Module with internal PIFA antenna. Open CPU version. Using ESP32-D0WDQ6-V3. Flash 16Mbit.
NINA-W106-00B	Module with internal PCB trace antenna. Open CPU version. Using ESP32-D0WD-V3. Flash 32Mbit.
NINA-W106-10B	Module with internal PCB trace antenna. Open CPU version. Using ESP32-D0WD-V3. Flash 64Mbit.

Table 27: Product ordering codes

Appendix

A Glossary

Abbreviation	Definition
ADC	Analog to Digital Converter
BLE	Bluetooth low energy
BPF	Band Pass Filter
BR/EDR	Basic rate/Enhanced data rate
BT	Bluetooth
CAN	Controller Area Network
CTS	Clear To Send
DAC	Digital to Analog Converter
DC	Direct Current
DSR	Data Set Ready
ESD	Electro Static Discharge
FCC	Federal Communications Commission
GATT	Generic ATTribute profile
GND	Ground
GPIO	General Purpose Input/Output
I2C	Inter-Integrated Circuit
IC	Industry Canada
IEEE	Institute of Electrical and Electronics Engineers
IoT	Internet of Things
LPO	Low Power Oscillator
MCU	Micro Controller Unit
MDIO	Management Data Input / Output
MII	Media-Independent Interface
MIMO	Multi-Input Multi-Output
MRD	Market Requirement Document
MSD	Moisture Sensitive Device
N/A	Not Applicable
PCN	Product Change Notification
PIFA	Planar Inverted IF Antenna
QSPI	Quad Serial Peripheral Interface
RMII	Reduced Media Independent Interface
RTS	Request To Send
RXD	Receive Data
SDIO	Secure Digital Input Output
SDK	Software Development Kit
SPI	Serial Peripheral Interface
TBD	To Be Defined
TXD	Transmit Data
UART	Universal Asynchronous Receiver/Transmitter

Table 28: Explanation of the abbreviations and terms used

Related documents

[1] NINA-W1 series system integration manual, UBX-17005730
[2] Packaging information reference, UBX-14001652
[3] Espressif System ESP32 Datasheet, version 3.6
[4] NINA-W10 declaration of conformity, UBX-18007184
[5] NINA-W10 series product summary, UBX-17051775

☞ For product change notifications and regular updates of u-blox documentation, register on our website, www.u-blox.com.

Revision history

Revision	Date	Name	Comments
R01	5-Mar-2018	mwej, kgom	Initial release of the Data Sheet for NINA-W10 series with open CPU architecture. Refer to UBX-17006694 for information about NINA-W13 series.
R02	19-Apr-2018	mlju, kgom	Updated the ordering codes (Table 27).
R03	5-Jun-2018	mwej, ovik, mlju, kgom	Added Bluetooth Qualification information (section 6.11). Updated Mac addresses (section 1.7). Updated Table 4 and section 6.
R04	4-Jan-2019	mwej, kgom	Removed "pending" status for Japan and Korea (section 6.1). Updated label description (Table 24). Updated Bluetooth qualification information (section 6.11). Updated SPI data signals naming to MOSI/MISO (section 3.4). Added information about UART2 (section 2.7.1). Removed LPO functionality. In chapter 4, updated RF characteristics.
R05	8-Aug-2019	mwej	Corrected LPO functionality information (moved LPO_IN signal from pin 5 to pin 7). Added certification information for Brazil, Australia, New Zealand and South Africa (sections 6.7-6.9). Updated information about approved antennas (chapter 7). Updated with RoHS 3 compliance (section 6.2.2). Updated voltage supply range (section 0) and Absolute maximum module supply voltage and maximum RF input ratings (section 4.1). Updated maximum ESD ratings (section 4.1.1). Corrected Wi-Fi typical output power in section 1.5 (matching Wi-Fi radio characteristics section). Updated Bluetooth output power and sensitivity (sections 4.2.8 and 4.2.9).
R06	20-Apr-2020	hekf	Added information describing the new NINA-W106 product and NINA-W101/W102 variants. Added antenna radiation patterns in section 4.2.10. Changed bootstrap information in section 2.4. Changed ESD ratings in section 4.1.1 and descriptions of GPIO drive current capabilities in section 4.2.5. Changed the number of GPIOs, Table 4, Figure 2, and Figure 3.
R07	8-Jul-2020	hekf	Added footnote in ESD section 4.1.1. Changed status of NINA-W101-01B-00 and NINA-W102-01B-00 modules to In Development.
R08	10-Jul-2020	mwej	Changed status of NINA-W106-00B-00 to Prototype.
R09	18-Dec-2020	hekf	Updated Radiation pattern in section 4.2.10. Updated the current consumptions in section 4.2.6. Updated frequency range in section 4.2.7. Noted ESP32 internally configured in section 2.4. Added remark concerning pin 5 and 7 LPO in section 3.4. Removed max values in section 4.2.6 Current consumption. Revised Wi-Fi throughput, power consumption parameters in sleep mode, certifications, and approvals status. Added WPA3 security support. Revised NINA-W106 product status in the Document information.
R10	8-Apr-2021	fkru, flun, hekf	Added NINA-W106 as certified for Canada, Japan, Australia, and New Zeeland in section 6 (Qualification and approvals). Removed reference to Host Subsystem QD ID 110883. Clarified LPO requirements in section 4.2.4 and decreased the minimum capacitor to 200 pF. Removed Product feature table.

Revision	Date	Name	Comments
R11	27-Oct-21	fkru, hekf, mlju, cche	Added NINA-W106 as certified for South Korea and Brazil. Updated names for ProAnt Ex-It series antennas and FlatWhip EOL in Approved antennas. Removed NINA-W106-00B-00 and added NINA-W106-00B-01 and NINA-W106-10B-00 in the product table, Document information and Ordering information. Removed ambiguous description of operating condition ranges in Electrical specifications. Updated information describing Moisture sensitivity levels, Reflow soldering, and ESD precautions. Revised Labeling and ordering information. Updated all document cross references. Revised Maximum ESD ratings.
R12	29-Nov-21	hekf	Changed to Initial Production for NINA-W106-10B-00 in the product table, Document information. Revised Product handling information and removed obsolete notice relating to information validity for modules in Development status.
R13	16-Aug-22	fkru, cche, ecar	Added ICASA certification for NINA-W106 in South Africa regulatory compliance. Corrected appropriate bake mount time to 72 hours in Moisture sensitivity levels. Updated contact information. Revised Bluetooth qualification information. Revised former Proant antenna references with updated part numbers from Abracon and removed obsolete antennas (EOL) from the list of approved antennas. Removed ordering codes for now obsolete/EOL products (NINA-W101-00B and NINA-W102-00B).

Contact

For further support and contact information, visit us at www.u-blox.com/support.