Description

The 8T49N283 has two independent, fractional-feedback PLLs that can be used as jitter attenuators and frequency translators. It is equipped with six integer and two fractional output dividers, allowing the generation of up to 8 different output frequencies, ranging from 8kHz to 1GHz. Four of these frequencies are completely independent of each other and the inputs. The other four are related frequencies. The eight outputs may select among LVPECL, LVDS or LVCMOS output levels.

This makes it ideal to be used in any frequency translation application, including 1G, 10G, 40G and 100G Synchronous Ethernet, OTN, and SONET/SDH, including ITU-T G.709 (2009) FEC rates. The device may also behave as a frequency synthesizer.

The 8T49N283 accepts up to two differential or single-ended input clocks and a crystal input. Each of the two internal PLLs can lock to different input clocks which may be of independent frequencies. Each PLL can use the other input for redundant backup of the primary clock, but in this case, both input clocks must be related in frequency.

The device supports hitless reference switching between input clocks. The device monitors all input clocks for Loss of Signal (LOS), and generates an alarm when an input clock failure is detected. Automatic and manual hitless reference switching options are supported. LOS behavior can be set to support gapped or un-gapped clocks.

The 8T49N283 supports holdover for each PLL. The holdover has an initial accuracy of ±50ppB from the point where the loss of all applicable input reference(s) has been detected. It maintains a historical average operating point for each PLL that may be returned to in holdover at a limited phase slope.

The device places no constraints on input to output frequency conversion, supporting all FEC rates, including the new revision of ITU-T Recommendation G.709 (2009), most with 0ppm conversion error.

Each PLL has a register-selectable loop bandwidth from 0.5Hz to 512Hz.

Each output supports individual phase delay settings to allow output-output alignment.

The device supports Output Enable inputs and Lock, Holdover and LOS status outputs.

The device is programmable through an I^2C interface. It also supports I^2C master capability to allow the register configuration to be read from an external EEPROM.

Typical Applications

- OTN or SONET / SDH equipment Line cards (up to OC-192, and supporting FEC ratios)
- OTN de-mapping (Gapped Clock and DCO mode)
- Gigabit and Terabit IP switches / routers including support of Synchronous Ethernet
- Wireless base station baseband
- Data communications

Features

- Supports SDH/SONET and Synchronous Ethernet clocks including all FEC rate conversions
- Two differential outputs meet jitter limits for 100G Ethernet and STM-256/OC-768
  - <0.3ps RMS (including spurs): 12kHz to 20MHz
- All outputs <0.5ps RMS (including spurs) 12kHz to 20MHz
- Operating modes: locked to input signal, holdover and free-run
  - Initial holdover accuracy of ±50ppb
- Accepts up to two LVPECL, LVDS, LVHSTL or LVCMOS input clocks
  - Accepts frequencies ranging from 8kHz up to 875MHz
  - Auto and manual input clock selection with hitless switching
  - Clock input monitoring, including support for gapped clocks
- Phase-Slope Limiting and Fully Hitless Switching options to control output phase transients
- Operates from a 10MHz to 40MHz fundamental-mode crystal
- Generates eight LVPECL / LVDS or sixteen LVCMOS output clocks
  - Output frequencies ranging from 8kHz up to 1.0GHz (diff)
  - Output frequencies ranging from 8kHz to 250MHz (LVCMOS)
- Four General Purpose I/O pins with optional support for status & control:
  - Four Output Enable control inputs may be mapped to any of the eight outputs
  - Lock, Holdover & Loss-of-Signal status outputs
- Open-drain Interrupt pin
- Programmable PLL bandwidth settings for each PLL:
  - 0.5Hz, 1Hz, 2Hz, 4Hz, 8Hz, 16Hz, 32Hz, 64Hz, 128Hz, 256Hz or 512Hz
  - Optional Fast Lock function
- Programmable output phase delays in steps as small as 16ps
- Register programmable through I^2C or via external I^2C EEPROM
- Bypass clock paths for system tests
- Power supply modes
  V_{CC} / V_{CCA} / V_{CCO}
  3.3V / 3.3V / 3.3V
  3.3V / 3.3V / 2.5V
  3.3V / 3.3V / 1.8V (LVCMOS)
  2.5V / 2.5V / 3.3V
  2.5V / 2.5V / 2.5V
  2.5V / 2.5V / 1.8V (LVCMOS)
- Power down modes support consumption as low as 1.7W (see *Power Dissipation and Thermal Considerations* for details)
- -40°C to 85°C ambient operating temperature
- Package: 56QFN, lead-free (RoHS 6)

© 2019 Renesas Electronics Corporation

8T49N283 Block Diagram

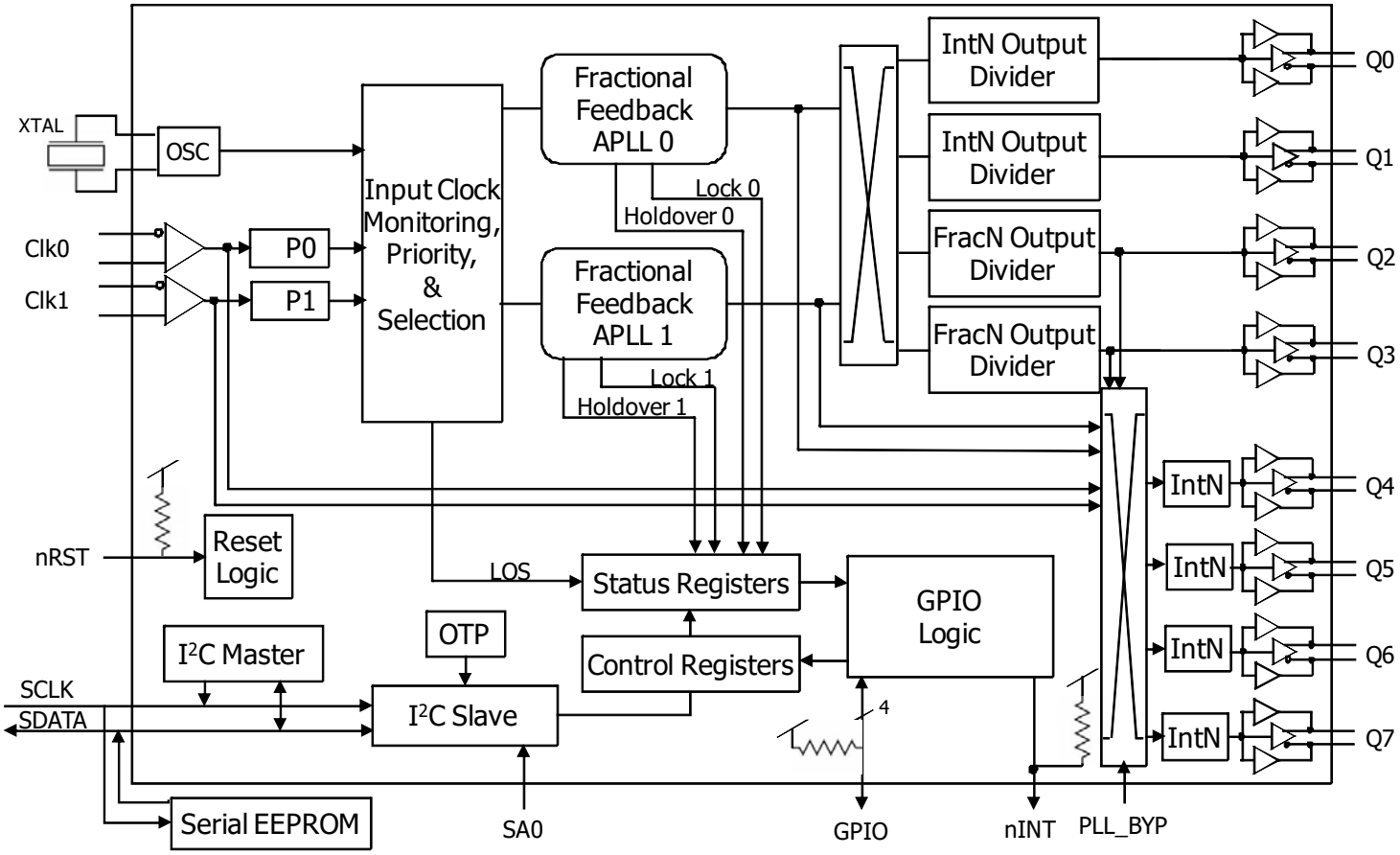

Figure 1. 8T49N283 Functional Block Diagram

Pin Assignment

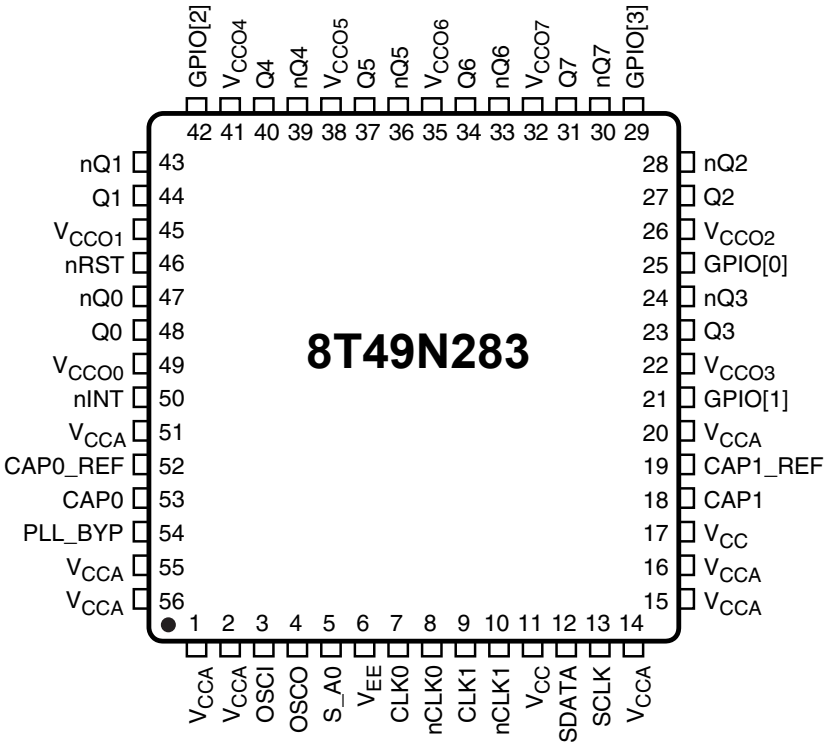

56-Lead, 8mm x 8mm VFQFN Package

Figure 2. Pinout Drawing

Pin Description and Pin Characteristic Tables

Table 1. Pin Descriptions

Number	Name	Type		Description
3	OSCI	I		Crystal Input. Accepts a 10MHz-40MHz reference from a clock oscillator or a 12pF fundamental mode, parallel-resonant crystal. For proper device functionality, a crystal or external oscillator must be connected to this pin.
4	OSCO	O		Crystal Output. This pin must be connected to a crystal. If an oscillator is connected to OSCI, then this pin must be left unconnected.
5	S_A0	I	Pulldown	I^2C lower address bit A0.
12	SDATA	I/O	Pullup	I^2C interface bi-directional Data.
13	SCLK	I/O	Pullup	I^2C interface bi-directional Clock.
7	CLK0	I	Pulldown	Non-inverting differential clock input.
8	nCLK0	I	Pullup / Pulldown	Inverting differential clock input. $V_{CC}/2$ when left floating (set by the internal pullup and pulldown resistors.)
9	CLK1	I	Pulldown	Non-inverting differential clock input.
10	nCLK1	I	Pullup / Pulldown	Inverting differential clock input. $V_{CC}/2$ when left floating (set by the internal pullup and pulldown resistors.)
48, 47	Q0, nQ0	O	Universal	Output Clock 0. Please refer to the Output Drivers for more details.
44, 43	Q1, nQ1	O	Universal	Output Clock 1. Please refer to the Output Drivers for more details.
27, 28	Q2, nQ2	O	Universal	Output Clock 2. Please refer to the Output Drivers for more details.
23, 24	Q3, nQ3	O	Universal	Output Clock 3. Please refer to the Output Drivers for more details.
40, 39	Q4, nQ4	O	Universal	Output Clock 4. Please refer to the Output Drivers for more details.
37, 36	Q5, nQ5	O	Universal	Output Clock 5. Please refer to the Output Drivers for more details.
34, 33	Q6, nQ6	O	Universal	Output Clock 6. Please refer to the Output Drivers for more details.
31, 30	Q7, nQ7	O	Universal	Output Clock 7. Please refer to the Output Drivers for more details.
46	nRST	I	Pullup	Master Reset input. LVTTL / LVCMOS interface levels: 0 = All registers and state machines are reset to their default values 1 = Device runs normally
50	nINT	O	Open-drain with pullup	Interrupt output.
29, 42, 21, 25	GPIO[3:0]	I/O	Pullup	General-purpose input-outputs. LVTTL / LVCMOS Input levels. Open-drain output.Pulled-up with 5.1kΩ resistor to V_{CC}.
54	PLL_BYP	I	Pulldown	Bypass Selection. Allow input references to bypass both PLLs. LVTTL / LVCMOS interface levels.
6, ePad	V_{EE}	Power		Negative supply voltage. All V_{EE} pins and EPAD must be connected before any positive supply voltage is applied.
11	V_{CC}	Power		Core and digital functions supply voltage.
17	V_{CC}	Power		Core and digital functions supply voltage.
2	V_{CCA}	Power		Analog functions supply voltage for core analog functions.
14, 15, 16, 20	V_{CCA}	Power		Analog functions supply voltage for analog functions associated with PLL1.
1, 51, 55, 56	V_{CCA}	Power		Analog functions supply voltage for analog functions associated with PLL0.
49	V_{CCO0}	Power		High-speed output supply voltage for output pair Q0, nQ0.
45	V_{CCO1}	Power		High-speed output supply voltage for output pair Q1, nQ1.
26	V_{CCO2}	Power		High-speed output supply voltage for output pair Q2, nQ2.
22	V_{CCO3}	Power		High-speed output supply voltage for output pair Q3, nQ3.

© 2019 Renesas Electronics Corporation

Number	Name	Type		Description
41	V_{CCO4}	Power		High-speed output supply voltage for output pair Q4, nQ4.
38	V_{CCO5}	Power		High-speed output supply voltage for output pair Q5, nQ5.
35	V_{CCO6}	Power		High-speed output supply voltage for output pair Q6, nQ6.
32	V_{CCO7}	Power		High-speed output supply voltage for output pair Q7, nQ7.
53 52	CAP0, CAP0_REF	Analog		PLL0 External Capacitance. A 0.1µF capacitance value across these pins is recommended.
18 19	CAP1, CAP1_REF	Analog		PLL1 External Capacitance. A 0.1µF capacitance value across these pins is recommended.

NOTE: *Pullup* and *Pulldown* refer to internal input resistors. See Table 2, on page 5, *Pin Characteristics,* for typical values.

Table 2. Pin Characteristics, V_{CC} = V_{CCOX} = 3.3V±5% or 2.5V±5%

Symbol	Parameter		Test Conditions	Minimum	Typical	Maximum	Units
C_{IN}	Input Capacitance; NOTE[1]				3.5		pF
R_{PULLUP}	Internal Pullup Resistor	nRST, SDATA, SCLK			51		kΩ
		nINT			50		kΩ
		GPIO[3:0]			5.1		kΩ
$R_{PULLDOWN}$	Internal Pulldown Resistor				51		kΩ
C_{PD}	Power Dissipation Capacitance (per output pair)	LVCMOS Q[0:1], Q[4:7]	V_{CCOX} = 3.465V		14.5		pF
		LVCMOS Q[2:3]	V_{CCOX} = 3.465V		18.5		pF
		LVCMOS Q[0:1], Q[4:7]	V_{CCOX} = 2.625V		13		pF
		LVCMOS Q[2:3]	V_{CCOX} = 2.625V		17.5		pF
		LVCMOS Q[0:1], Q[4:7]	V_{CCOX} = 1.89V		12.5		pF
		LVCMOS Q[2:3]	V_{CCOX} = 1.89V		17		pF
		LVDS or LVPECL Q[0:1], Q[4:7]	V_{CCOx} = 3.465V or 2.625V		2		pF
		LVDS or LVPECL Q[2:3]	V_{CCOx} = 3.465V or 2.625V		4.5		pF
R_{OUT}	Output Impedance	GPIO [3:0]	Output HIGH		5.1		kΩ
			Output LOW		25		Ω
		LVCMOS Q[0:7], nQ[0:7]			20		Ω

NOTE 1: This specification does not apply to OSCI and OSCO pins.

NOTE: V_{CCOX} denotes: V_{CCO0}, V_{CCO1}, V_{CCO2}, V_{CCO3}, V_{CCO4}, V_{CCO5}, V_{CCO6}, V_{CCO7}.

© 2019 Renesas Electronics Corporation

Principles of Operation

The 8T49N283 has two PLLs that can each independently be locked to any of the input clocks and generate a wide range of synchronized output clocks.

It incorporates two completely independent PLLs. These could be used for example in the transmit and receive path of Synchronous Ethernet equipment. Either of the input clocks can be selected as the reference for either PLL. From the output of the two PLLs a wide range of output frequencies can be simultaneously generated.

The 8T49N283 accepts up to two differential input clocks ranging from 8kHz up to 875MHz. It generates up to eight output clocks ranging from 8kHz up to 1.0GHz.

Each PLL path within the 8T49N283 supports three states: Lock, Holdover and Free-run. Lock & holdover status may be monitored on register bits and pins. Each PLL also supports automatic and manual hitless reference switching. In the locked state, the PLL locks to a valid clock input and its output clocks have a frequency accuracy equal to the frequency accuracy of the input clock. In the Holdover state, the PLL will output a clock which is based on the selected holdover behavior. Each of the PLL paths within the 8T49N283 has an initial holdover frequency offset of ±50ppb. In the Free-run state, the PLL outputs a clock with the same frequency accuracy as the external crystal.

Upon power up, each PLL will enter Free-run state, in this state it generates output clocks with the same frequency accuracy as the external crystal. The 8T49N283 continuously monitors each input for activity (signal transitions).

In automatic reference switching, when an input clock has been validated the PLL will transition to the locked state. If the selected input clock fails and there are no other valid input clocks, the PLL will quickly detect that and go into holdover. In the Holdover state, the PLL will output a clock which is based on the selected holdover behavior. If the selected input clock fails and another input clock is available then the 8T49N283 will hitlessly switch to that input clock. The reference switch can be either revertive or non-revertive.

The device supports conversion of any input frequency to four different, independent output frequencies on the Q[0:3]outputs. Additionally, a further four output frequencies may be generated that are integer-related to the four independent frequencies. These additional four frequencies are on the Q[4:7] outputs.

The 8T49N283 has a programmable loop bandwidth from 0.5Hz to 512Hz.

The device monitors all input clocks and generates an alarm when an input clock failure is detected.

The device supports programmable individual output phase adjustments in order to allow control of input to output phase adjustments and output to output phase alignment.

The device is programmable through an I^2C and may also autonomously read its register settings from an internal One-Time Programmable (OTP) memory or an external serial I^2C EEPROM.

Crystal Input

The crystal input on the 8T49N283 is capable of being driven by a parallel-resonant, fundamental mode crystal with a frequency range of 10MHz - 40MHz.

The oscillator input also supports being driven by a single-ended crystal oscillator or reference clock.

The initial holdover frequency offset is set by the device, but the long term drift depends on the quality of the crystal or oscillator attached to this port.

Bypass Path

For system test purposes, each of PLL0 and PLL1 may be bypassed. When PLL_BYP is asserted the CLK0 input reference will be presented directly on the Q4 output. The CLK1 input reference will be presented directly on the Q5 output.

Additionally, CLK0 or CLK1 may be used as a clock source for the output dividers of Q[4:7]. This may only be done for input frequencies of 250MHz or less.

Input Clock Selection

The 8T49N283 accepts up to two input clocks with frequencies ranging from 8kHz up to 875MHz. Each input can accept LVPECL, LVDS, LVHSTL, HCSL or LVCMOS inputs using 1.8V, 2.5V or 3.3V logic levels. To use LVCMOS inputs, refer to the Application Note, Wiring the Differential Input to Accept Single-Ended Levels for biasing instructions.

The device has independent input clock selection control for each PLL. In Manual mode, only one of these inputs may be chosen per PLL and if that input fails that PLL will enter holdover.

Manual mode may be operated by directly selecting the desired input reference in the REFSEL register field. It may also operate via pin-selection of the desired input clock by selecting that mode in the REFSEL register field. In that case, GPIOs must be used as Clock Select inputs (CSELn). CSEL0 = 0 will select the CLK0 input and CSEL0 = 1 will select the CLK1 input for PLL0. CSEL1 will perform the same function for PLL1.

In addition, the crystal frequency may be passed directly to the output dividers for Q[4:7] for use as a reference.

Inputs do not support transmission of spread-spectrum clocking sources. Since this family is intended for high-performance applications, it will assume input reference sources to have stabilities of ±100ppm or better, except where gapped clock inputs are used.

If the PLL is working in automatic mode, then each of the input reference sources is assigned a priority of 1-2. At power-up or if the currently selected input reference fails, the PLL will switch to the highest priority input reference that is valid at that time (see Input Clock Monitor for details).

Automatic mode has two sub-options: revertive or non-revertive. In revertive mode, the PLL will switch to a reference with a higher priority setting whenever one becomes valid. In non-revertive mode the PLL remains with the currently selected source as long as it remains valid.

The clock input selection is based on the input clock priority set by the Clock Input Priority control registers. It is recommended that all input references for a PLL be given different priority settings in the Clock Input Priority control registers for that PLL.

© 2019 Renesas Electronics Corporation

Input Clock Monitor

Each clock input is monitored for Loss of Signal (LOS). If no activity has been detected on the clock input within a user-selectable time period then the clock input is considered to be failed and an internal Loss-of-Signal status flag is set, which may cause an input switchover depending on other settings. The user-selectable time period has sufficient range to allow a gapped clock missing many consecutive edges to be considered a valid input.

User-selection of the clock monitor time-period is based on a counter driven by a monitor clock. The monitor clock is fixed at the frequency of PLL0's VCO divided by 8. With a VCO range of 3GHz - 4GHz, the monitor clock has a frequency range of 375MHz to 500MHz.

The monitor logic for each input reference will count the number of monitor clock edges indicated in the appropriate Monitor Control register. If an edge is received on the input reference being monitored, then the count resets and begins again. If the target edge count is reached before an input reference edge is received, then an internal soft alarm is raised and the count re-starts. During the soft alarm period, the PLL(s) tracking this input will not be adjusted. If an input reference edge is received before the count expires for the second time, then the soft alarm status is cleared and the PLL(s) will resume adjustments. If the count expires again without any input reference edge being received, then a Loss-of-Signal alarm is declared.

It is expected that for normal (non-gapped) clock operation, users will set the monitor clock count for each input reference to be slightly longer than the nominal period of that input reference. A margin of 2-3 monitor clock periods should give a reasonably quick reaction time and yet prevent false alarms.

For gapped clock operation, the user will set the monitor clock count to a few monitor clock periods longer than the longest expected clock gap period. The monitor count registers support 17-bit count values, which will support at least a gap length of two clock periods for any supported input reference frequency, with longer gaps being supported for faster input reference frequencies. Since gapped clocks usually occur on input reference frequencies above 100MHz, gap lengths of thousands of periods can be supported.

Using this configuration for a gapped clock, the PLL will continue to adjust while the normally expected gap is present, but will freeze once the expected gap length has been exceeded and alarm after twice the normal gap length has passed.

Once a LOS on any of the input clocks is detected, the appropriate internal LOS alarm will be asserted and it will remain asserted until that input clock returns and will be validated by the receipt of eight rising clock edges on that input reference. If another error condition on the same input clock is detected during the validation time then the alarm remains asserted and the validation time starts over.

Each LOS flag may also be reflected on one of the GPIO[3:0] outputs. Changes in status of any reference can also generate an interrupt if not masked.

Holdover

8T49N283 supports a small initial holdover frequency offset for each PLL path in non-gapped clock mode. When the input clock monitor is set to support gapped clock operation, this initial holdover frequency offset is indeterminate since the desired behavior with gapped clocks is for the PLL to continue to adjust itself even if clock edges are missing. In gapped clock mode, the PLL will not enter holdover until the input is missing for two LOS monitor periods.

The holdover performance characteristics of a clock are referred as its accuracy and stability, and are characterized in terms of the fractional frequency offset. The 8T49N283 can only control the initial frequency accuracy. Longer-term accuracy and stability are determined by the accuracy and stability of the external oscillator.

When a PLL loses all valid input references, it will enter the holdover state. In non-gapped clock mode, the PLL will initially maintain its most recent frequency offset setting and then transition at a rate dictated by its selected phase-slope limit setting to a frequency offset setting that is based on historical settings.

This behavior is intended to compensate for any frequency drift that may have occurred on the input reference before it was detected to be lost.

The historical holdover value will have three options:

- Return to center of tuning range within the VCO band.
- Instantaneous mode - the holdover frequency will use the DPLL current frequency 100msec before it entered holdover. The accuracy is shown in the *AC Characteristics Table,* Table 10, on page 50.
- Fast average mode - an internal IIR (Infinite Impulse Response) filter is employed to get the frequency offset. The IIR filter gives a 3 dB attenuation point corresponding to a nominal period of 20 minutes. The accuracy is shown in the *AC Characteristics Table,* Table 10, on page 50.

When entering holdover, each PLL will set a separate internal HOLD alarm internally. This alarm may be read from internal status register, appear on the appropriate GPIO pin and/or assert the nINT output.

While a PLL is in holdover, its frequency offset is now relative to the crystal input and so the output clocks derived from that PLL will be tracing their accuracy to the local oscillator or crystal. At some point in time, depending on the stability & accuracy of that source, the clock(s) derived from that PLL will have drifted outside of the limits of the holdover state and the system will be considered to be in a free-run state. Since this borderline is defined outside the PLL and dictated by the accuracy and stability of the external local crystal or oscillator, the 8T49N283 cannot know or influence when that transition occurs. As a result, the 8T49N283 will remain in the holdover state internally.

© 2019 Renesas Electronics Corporation

Input to Output Clock Frequency

The 8T49N283 is designed to accept any frequency in its input range and generate eight different output frequencies that are independent from each other and from the input frequencies. The internal architecture of the device ensures that most such translations will result in the exact output frequency specified. Where exact frequency translation is not possible, the frequency translation error will be minimized.Please contact IDT for configuration software or other assistance in determining if a desired configuration will be supported exactly.

Synthesizer Mode Operation

The device may also act as a frequency synthesizer with either or both PLL's generating their operating frequency from just the crystal input. By setting the SYN_MODEn register bit and setting the STATEn[1:0] field to Freerun, no input clock references are required to generate the desired output frequencies.

Loop Filter and Bandwidth

When operating in Synthesizer Mode as described above, the 8T49N283 has a fixed loop bandwidth of approximately 200kHz. When operating in all other modes, the following information applies:

The 8T49N283 uses no external components to support a range of loop bandwidths: 0.5Hz, 1Hz, 2Hz, 4Hz, 8Hz, 16Hz, 32Hz, 64Hz, 128Hz, 256Hz or 512Hz. Each PLL shall support separate loop filter settings.

The device supports three different loop bandwidth settings for each PLL: acquisition, locked and tight-locked. These loop bandwidths are selected from the list of options described above. If enabled, the acquisition bandwidth is used while lock is being acquired to allow the PLL to “fast-lock”. Once locked the PLL will use the locked bandwidth setting. If the acquisition bandwidth setting is not used, the PLL will use the locked bandwidth setting at all times. The tight-locked setting may be used to lower phase noise in situations where the input reference only varies within a very narrow, register-programmed range.

Output Dividers and Mapping to PLLs

The 8T49N283 will support eight output dividers that may be mapped to either PLL. Six of the output dividers will have IntN capability only (see Table 3) and the other two will support FracN division.

Integer Output Divider Programming (Q[0:1], Q[4:7] only)

Each integer output divider block consists of two divider stages in a series to achieve the desired total output divider ratio. The first stage divider may be set to divide by 4, 5 or 6. The second stage of the divider may be bypassed (i.e. divide-by-1) or programmed to any even divider ratio from 2 to 131,070. The total divide ratios, settings and possible output frequencies are shown in Table 3.

In addition, the first divider stage for the Q[4:7] outputs supports a bypass (i.e. divide-by-1) operation for some clock sources.

Table 3. Q[0:1], Q[4:7] Output Divide Ratios

1st-Stage Divide	2nd-Stage Divide	Total Divide	Minimum F_{OUT} MHz	Maximum F_{OUT} MHz
4	1	4	750	1000
5	1	5	600	800
6	1	6	500	666.7
4	2	8	375	500
5	2	10	300	400
6	2	12	250	333.3
4	4	16	187.5	250
5	4	20	150	200
6	4	24	125	166.7
...				
4	131,070	524,280	0.0057	0.0076
5	131,070	655,350	0.0046	0.0061
6	131,070	786,420	0.0038	0.0051

NOTE: Above frequency ranges for Q[4:7] apply when driven directly from PLL0 or PLL1.

Fractional Output Divider Programming (Q2, Q3 only)

For the FracN output dividers Q[2:3], the output divide ratio is given by:

Output Divide Ratio = (N.F)x2

N = Integer Part: 4, 5, ...(2^{18}-1)

F = Fractional Part: [0, 1, 2, ...(2^{28}-1)]/(2^{28})

For integer operation of these outputs dividers, N = 3 is also supported.

Output Divider Frequency Sources

Output dividers associated with the Q[0:3] outputs can take their input frequencies from either PLL0 or PLL1.

Output dividers associated with the Q[4:7] outputs can take their input frequencies from PLL0, PLL1, Q2 or Q3 output dividers, CLK0 or CLK1 input frequencies or the crystal frequency.

Output Banks

Outputs of the 8T49N283 are divided into three banks for purposes of output skew measurement:

- Q0, nQ0, Q1, nQ1
- Q4, nQ4, Q5, nQ5
- Q6, nQ6, Q7, nQ7

© 2019 Renesas Electronics Corporation

Output Phase Control on Switchover

When the 8T49N283 switches between input references, enters or leaves the holdover state for either PLL, there are two options on how the output phase can be controlled in these events: phase-slope limiting or fully hitless switching (sometimes called phase build-out) may be selected. The SWMODEn bit selects which behavior is to be followed for PLLn.

If fully hitless switching is selected, then the output phase will remain unchanged under any of these conditions. Note that fully hitless switching is not supported when external loopback is being used. Fully hitless switching should not be used unless all input references are in the same clock domain. Note that use of this mode may prevent an output frequency and phase from being able to trace its alignment back to a primary reference source.

If phase-slope limiting is selected, then the output phase will adjust from its previous value until it is tracking the new condition at a rate dictated by the SLEWn[1:0] bits. Phase-slope limiting should be used if all input references are not in the same clock domain or users wish to retain traceability to a primary reference source.

Output Phase Alignment

The device has a programmable output to output phase alignment for each of the eight output dividers. After power-up and the PLLs have achieved lock, the device will be in a state where the outputs are synchronized with a deterministic offset relative to each other.After synchronization, the output alignment will depend on the particular configuration of each output according to the following rules. The step size is defined as the period of the clock to that divider:

1) Only outputs derived from the same source will be aligned with each other. 'Source' means the reference selected to drive the output divider as controlled by the CLK_SELn bit for each output.

2) For integer dividers (Q[0:1], Q[4:7]) when both divider stages are active, edges are aligned. This case is used as a baseline to compare the other cases here.

3) For integer dividers where the 1st-stage divider is bypassed (only Q[4:7] support this), coarse delay adjustments can’t be performed. The output phase will be one step earlier than in Case 2.

4) Fractional output dividers (Q2 or Q3) do not guarantee any specific phase on power-up or after a synchronization event.

5) Integer dividers using Q2 or Q3 as a source (Q[4:7] support this option) will be aligned to their source divider's output (Q2 or Q3). Note that the output skews described above are not included in any of the phase adjustments described here.

Once the device is in operation, the outputs associated with each PLL may have their phase adjustments re-synced in one of two ways:

1) If the PLL becomes unlocked, the coarse phase adjustments will be reset and the fine phase adjustments will be re-loaded once it becomes locked again.

2) Toggling of a register bit for either PLL (PLLn_SYN bits in register 00A8h) may also be used to force a re-sync / re-load for outputs associated with that PLL.

The user may apply adjustments that are proportional to the period of the clock source each output divider is operating from. For example, if the divider associated with Output Q3 is running off PLL0, which has a VCO frequency of 4GHz, then the appropriate period would be 250ps. The output phase may be adjusted in these steps across the full period of the output.

- Coarse Adjustment: all Output Dividers may have their phase adjusted in steps of the source clock period. For example a 4GHz VCO gives a step size of 250ps. The user may request an adjustment of phase of up to 31 steps using a single register write. The phase will be adjusted by lengthening the period of the output by 250ps at a time. This process will be repeated every four output clock periods until the full requested adjustment has been achieved. A busy signal will remain asserted in the phase delay register until the requested adjustment is complete. Then a further adjustment may be setup and triggered by toggling the trigger bit.
- Fine Adjustment: For the Fractional Output Dividers associated with the Q2 and Q3 outputs, the phase of those outputs may be further adjusted with a granularity of 1/16th of the VCO period. For example a 4GHz VCO frequency gives a granularity of 16ps. This is performed by directly writing the required offset (from the nominal rising edge position) in units of 1/16th of the output period into a register. Then the appropriate PLLn_SYN bit must be toggled to load the new value. Note that toggling this bit will clear all Coarse Delays for all outputs associated with that PLL, so Fine Delays should be set first, before Coarse Delays. The output will then jump directly to that new offset value. For this reason, this adjustment should be made as the output is initially programmed or in High-Impedance.

Each output has the capability of being inverted (180 degree phase shift).

Jitter and Wander Tolerance

The 8T49N283 can be used as a line card device and therefore is expected to tolerate the jitter and wander output of a timing card PLL (e.g IDT82V3390).

Output Drivers

The Q0 to Q7 clock outputs are provided with register-controlled output drivers. By selecting the output drive type in the appropriate register, any of these outputs can support LVCMOS, LVPECL or LVDS logic levels.

The operating voltage ranges of each output is determined by its independent output power pin (V_{CCO}) and thus each can have different output voltage levels. Output voltage levels of 2.5V or 3.3V are supported for differential operation and LVCMOS operation. In addition, LVCMOS output operation supports 1.8V V_{CCO}.

Each output may be enabled or disabled by register bits and/or GPIO pins configured as Output Enables. The outputs will be enabled if the register bit and the associated OE pin are both asserted (high). When disabled an output will be in a high impedance state.

LVCMOS Operation

When a given output is configured to provide LVCMOS levels, then both the Q and nQ outputs will toggle at the selected output frequency. All the previously described configuration and control apply equally to both outputs. Frequency, phase alignment, voltage levels and enable / disable status apply to both the Q and nQ pins. When configured as LVCMOS, the Q and nQ outputs can be selected to be phase-aligned with each other or inverted relative to one another. Phase-aligned outputs will have increased simultaneous switching currents which can negatively affect phase noise performance and power consumption. It is recommended that use of this selection be kept to a minimum.

Power-Saving Modes

To allow the device to consume the least power possible for a given application, the following functions are included under register control:

- PLL1 may be shut down.
- Any unused output, including all output divider and phase adjustment logic, can be individually powered-off.
- Clock gating on logic that is not being used.

Status / Control Signals and Interrupts

General-Purpose I/Os & Interrupts

The 8T49N283 provides 4 General Purpose Input / Output (GPIO) pins for miscellaneous status & control functions. Each GPIO may be configured as an input or an output. Each GPIO may be directly controlled from register bits or be used as a predefined function as shown in Table 4. Note that the default state prior to configuration being loaded from internal OTP or external EEPROM will be to set each GPIO to function as an Output Enable.

Table 4. GPIO Configuration[1]

GPIO Pin	Configured as Input				Configured as Output		
	Fixed Function			General Purpose	Fixed Function		General Purpose
	Output Enable (default)	Output Enable	Clock Select				
3	OE[3]	OE[7]	CSEL1	GPI[3]	-	-	GPO[3]
2	OE[2]	OE[6]	CSEL0	GPI[2]	LOS[0]	LOS[1]	GPO[2]
1	OE[1]	OE[5]	-	GPI[1]	HOLD[0]	HOLD[1]	GPO[1]
0	OE[0]	OE[4]	-	GPI[0]	LOL[0]	LOL[1]	GPO[0]

NOTE 1:
OE[x]: Output Enable Control for output Qx, nQx. Logic-high enables the output pair.
GPI[x]: General Purpose Input. Logic state on GPIO[x] pin is directly reflected in GPI[x] register.
LOS[x]: Loss-of-Signal Status Flag for Input Reference x. Logic-high indicates input reference failure.
GPO[x]: General Purpose Output. Logic state is determined by value written in register GPO[x].
CSELn: Manual Clock Select Input for PLLn. Logic-high selects differential clock input 1 (CLK1).
HOLD[n]: Holdover Status Flag for Digital PLLn. Logic-high indicates digital PLLn in holdover status.
LOL[n]: Loss-of-Lock Status Flag for Digital PLLn. Logic-high indicates digital PLL not locked.
Refer to Register Descriptions for additional details.

If used in the Fixed Function mode of operation, the GPIO bits will reflect the real-time status of their respective status bits as shown in Table 4. Note that the LOL signal represents the lock status of the PLL. It does not account for the process of synchronization of the output dividers associated with that PLL. The output dividers programmed to operate from that PLL will automatically go through a re-synchronization process when the PLL locks or re-locks, or if the user triggers a re-sync manually via register bit PLLn_SYN. This synchronization process may result in a period of instability on the affected outputs for a duration of up to 350ns after the re-lock (LOL de-asserts) or the PLLn_SYN bit is de-asserted.

Interrupt Functionality

Interrupt functionality includes an interrupt status flag for each of PLL Loss-of-Lock Status (LOL[1:0]), PLL Holdover Status (HOLD[1:0]) and Input Reference Status (LOS[1:0]) that is set whenever there is an alarm on any of those signals. The Status Flag will remain set until the alarm has been cleared and a ‘1’ has been written to the Status Flag’s register location or if a reset occurs. Each Status Flag will also have an Interrupt Enable bit that will determine if that Status Flag is allowed to cause the Interrupt Status to be affected (enabled) or not (disabled). All Interrupt Enable bits will be in the disabled state after reset. The Device Interrupt Status flag and nINT output pin are asserted if any of the enabled Interrupt Status flags are set.

Device Hardware Configuration

The 8T49N283 supports an internal One-Time Programmable (OTP) memory that can be pre-programmed at the factory with 1 complete device configuration. If the device is set to read a configuration from an external, serial EEPROM, then the values read will overwrite the OTP-defined values.

This configuration can be over-written using the serial interface once reset is complete. Any configuration written via the programming interface needs to be re-written after any power cycle or reset. Please contact IDT if a specific factory-programmed configuration is desired.

Device Start-up & Reset Behavior

The 8T49N283 has an internal power-up reset (POR) circuit and a Master Reset input pin nRST. If either is asserted, the device will be in the Reset State.

For highly programmable devices, it's common practice to reset the device immediately after the initial power-on sequence. IDT recommends connecting the nRST input pin to a programmable logic source for optimal functionality. It is recommended that a minimum pulse width of 10ns be used to drive the nRST input pin.

While in the reset state (nRST input asserted or POR active), the device will operate as follows:

- All registers will return to & be held in their default states as indicated in the applicable register description.
- All internal state machines will be in their reset conditions.
- The serial interface will not respond to read or write cycles.
- The GPIO signals will be configured as General-Purpose inputs.
- All clock outputs will be disabled.
- All interrupt status and Interrupt Enable bits will be cleared, negating the nINT signal.

Upon the later of the internal POR circuit expiring or the nRST input negating, the device will exit reset and begin self-configuration.

The device will load an initial block of its internal registers using the configuration stored in the internal One-Time Programmable (OTP) memory. Once this step is complete, the 8T49N283 will check the register settings to see if it should load the remainder of its configuration from an external I^2C EEPROM at a defined address or continue loading from OTP. See I2C Boot-up Initialization Mode for details on how this is performed.

Once the full configuration has been loaded, the device will respond to accesses on the serial port and will attempt to lock both PLLs to the selected sources and begin operation. Once the PLLs are locked, all the outputs derived from a given PLL will be synchronized and output phase adjustments can then be applied if desired.

Serial Control Port Description

Serial Control Port Configuration Description

The device has a serial control port capable of responding as a slave in an I^2C compatible configuration, to allow access any of the internal registers for device programming or examination of internal status. All registers are configured to have default values. See the specifics for each register for details.

The device has the additional capability of becoming a master on the I^2C bus only for the purpose of reading its initial register configurations from a serial EEPROM on the I^2C bus. Writing of the configuration to the serial EEPROM must be performed by another device on the same I^2C bus or pre-programmed into the device prior to assembly.

I^2C Mode Operation

The I^2C interface is designed to fully support v1.2 of the I^2C Specification for Normal and Fast mode operation. The device acts as a slave device on the I^2C bus at 100kHz or 400kHz using the address defined in the Status Interface Control register (0006h), as modified by the S_A0 input pin setting. The interface accepts byte-oriented block write and block read operations. Two address bytes specify the register address of the byte position of the first register to write or read. Data bytes (registers) are accessed in sequential order from the lowest to the highest byte (most significant bit first). Read and write block transfers can be stopped after any complete byte transfer. During a write operation, data will not be moved into the registers until the STOP bit is received, at which point, all data received in the block write will be written simultaneously.

For full electrical I^2C compliance, it is recommended to use external pull-up resistors for SDATA and SCLK. The internal pull-up resistors

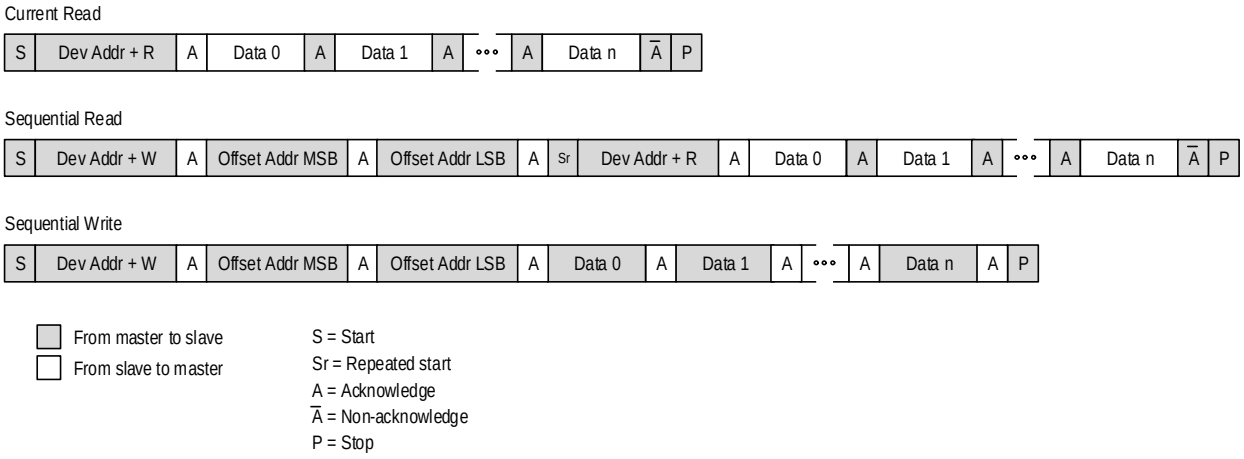

Figure 3. I^2C Slave Read and Write Cycle Sequencing

I²C Master Mode

When operating in I²C mode, the 8T49N283 has the capability to become a bus master on the I²C bus for the purposes of reading its configuration from an external I²C EEPROM. Only a block read cycle will be supported.

As an I²C bus master, the 8T49N283 will support the following functions:

- 7-bit addressing mode
- Base address register for EEPROM
- Validation of the read block via CCITT-8 CRC check against value stored in last byte (E0h) of EEPROM
- Support for 100kHz and 400kHz operation with speed negotiation. If bit d0 is set at Byte address 05h in the EEPROM, this will shift from 100kHz operation to 400kHz operation.
- Support for 1 or 2-byte addressing mode
- Master arbitration with programmable number of retries
- Fixed-period cycle response timer to prevent permanently hanging the I²C bus.
- Read will abort with an alarm (BOOTFAIL) if any of the following conditions occur: Slave NACK, Arbitration Fail, Collision during Address Phase, CRC failure, Slave Response time-out

The 8T49N283 will not support the following functions:

- I²C General Call
- Slave clock stretching
- I²C Start Byte protocol
- EEPROM Chaining
- CBUS compatibility
- Responding to its own slave address when acting as a master
- Writing to external I²C devices including the external EEPROM used for booting

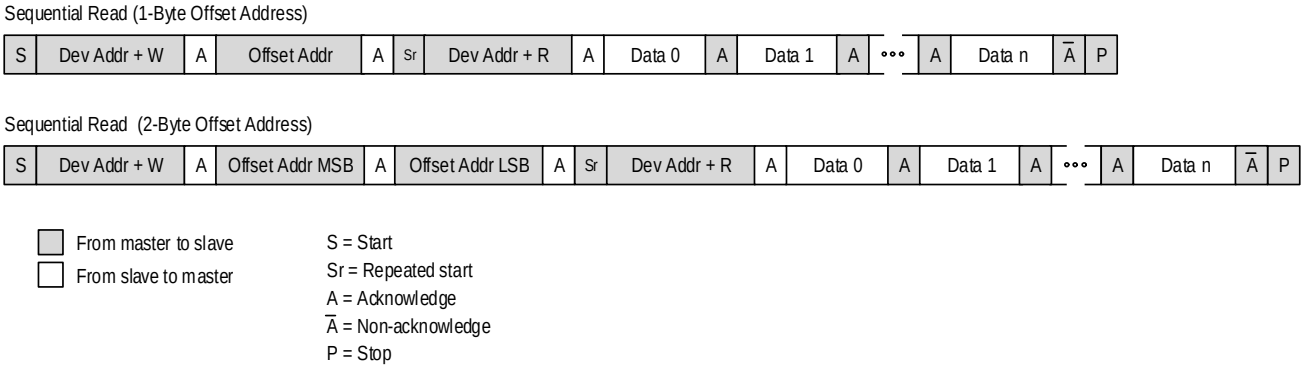

Figure 4. I²C Master Read Cycle Sequencing

I²C Boot-up Initialization Mode

If enabled (via the BOOT_EEP bit in the Startup register), once the nRST input has been deasserted (high) and its internal power-up reset sequence has completed, the device will contend for ownership of the I²C bus to read its initial register settings from a memory location on the I²C bus. The address of that memory location is kept in non-volatile memory in the Startup register. During the boot-up process, the device will not respond to serial control port accesses. Once the initialization process is complete, the contents of any of the device's registers can be altered. It is the responsibility of the user to make any desired adjustments in initial values directly in the serial bus memory.

If a NACK is received to any of the read cycles performed by the device during the initialization process, or if the CRC does not match the one stored in address E0h of the EEPROM the process will be aborted and any uninitialized registers will remain with their default values. The BOOTFAIL bit (021Eh) in the Global Interrupt Status register will also be set in this event.

If the BOOTFAIL bit is set, then both LOL[n] indicators will be set.

Contents of the EEPROM should be as shown in Table 5.

Table 5. External Serial EEPROM Contents

EEPROM Offset (Hex)	Contents							
	D7	D6	D5	D4	D3	D2	D1	D0
00	1	1	1	1	1	1	1	1
01	1	1	1	1	1	1	1	1
02	1	1	1	1	1	1	1	1
03	1	1	1	1	1	1	1	1
04	1	1	1	1	1	1	1	1
05	1	1	1	1	1	1	1	Serial EEPROM Speed Select 0 = 100kHz 1 = 400kHz
06	1	8T49N283 Device I^2C Address [6:2]					0	1
07	0	0	0	0	0	0	0	0
08 - DF	Desired contents of Device Registers 08h - DFh							
E0	Serial EEPROM CRC							
E1 - FF	Unused							

Register Descriptions

Table 6A. Register Blocks

Register Ranges Offset (Hex)	Register Block Description
0000 - 0001	Startup Control Registers
0002 - 0005	Device ID Control Registers
0006 - 0007	Serial Interface Control Registers
0008 - 003A	Digital PLL0 Control Registers
003B - 006D	Digital PLL1 Control Registers
006E - 0076	GPIO Control Registers
0077 - 00AB	Output Clock Control Registers
00AC - 00AF	Analog PLL0 Control Registers
00B0 - 00B3	Analog PLL1 Control Registers
00B4 - 00B8	Power-Down Control Registers
00B9 - 00C6	Input Monitor Control Registers
00C7 - 00C8	Interrupt Enable Registers
00C9 - 01FF	Reserved
0200 - 0203	Interrupt Status Registers
0204	Output Phase Adjustment Status Register
0205 - 020E	Digital PLL0 Status Registers
020F - 0218	Digital PLL1 Status Registers
0219	General-Purpose Input Status Register
021A - 021F	Global Interrupt and Boot Status Register
0220 - 03FF	Reserved

Table 6B. Startup Control Register Bit Field Locations and Descriptions

Startup Control Register Block Field Locations								
Address (Hex)	**D7**	**D6**	**D5**	**D4**	**D3**	**D2**	**D1**	**D0**
0000	EEP_RTY[4:0]					Rsvd	nBOOT_OTP	nBOOT_EEP
0001	EEP_A15	EEP_ADDR[6:0]						

Startup Control Register Block Field Descriptions			
Bit Field Name	**Field Type**	**Default Value**	**Description**
EEP_RTY[4:0]	R/W	00001b	Select number of times arbitration for the I^2C bus to read the serial EEPROM will be retried before being aborted. Note that this number does not include the original try.
nBOOT_OTP	R/W	NOTE[1]	Internal One-Time Programmable (OTP) memory usage on power-up: 0 = Load power-up configuration from OTP 1 = Only load 1st eight bytes from OTP
nBOOT_EEP	R/W	NOTE[1]	External EEPROM usage on power-up: 0 = Load power-up configuration from external serial EEPROM (overwrites OTP values) 1 = Don't use external EEPROM
EEP_A15	R/W	NOTE[1]	Serial EEPROM supports 15-bit addressing mode (multiple pages).
EEP_ADDR[6:0]	R/W	NOTE[1]	I^2C base address for serial EEPROM.
Rsvd	R/W	-	Reserved. Always write 0 to this bit location. Read values are not defined.

NOTE 1: These values are specific to the device configuration 'dash-code'. Please refer to the *FemtoClock NG Universal Frequency Translator Ordering Product Information guide* for exact default values.

Table 6C. Device ID Control Register Bit Field Locations and Descriptions

Device ID Control Register Block Field Locations								
Address (Hex)	**D7**	**D6**	**D5**	**D4**	**D3**	**D2**	**D1**	**D0**
0002	REV_ID[3:0]				DEV_ID[15:12]			
0003	DEV_ID[11:4]							
0004	DEV_ID[3:0]				DASH_CODE [10:7]			
0005	DASH_CODE [6:0]							1

Device ID Control Register Block Field Descriptions			
Bit Field Name	**Field Type**	**Default Value**	**Description**
REV_ID[3:0]	R/W	0010b	Device revision.
DEV_ID[15:0]	R/W	0601h	Device ID code.
DASH CODE [10:0]	R/W	NOTE[1]	Device Dash Code: Decimal value assigned by IDT to identify the configuration loaded at the factory. May be over-written by users at any time. Refer to *FemtoClock NG Universal Frequency Translator Ordering Product Information guide* to identify major configuration parameters associated with this Dash Code value.

NOTE 1: These values are specific to the device configuration 'dash-code'. Please refer to the *FemtoClock NG Universal Frequency Translator Ordering Product Information guide* for exact default values.

Table 6D. Serial Interface Control Register Bit Field Locations and Descriptions

Serial Interface Control Block Field Locations								
Address (Hex)	**D7**	**D6**	**D5**	**D4**	**D3**	**D2**	**D1**	**D0**
0006	Rsvd	UFTADD[6:2]					UFTADD[1]	UFTADD[0]
0007	Rsvd							1

Serial Interface Control Register Block Field Descriptions			
Bit Field Name	**Field Type**	**Default Value**	**Description**
UFTADD[6:2]	R/W	NOTE[1]	Configurable portion of I^2C Base Address (bits 6:2) for this device.
UFTADD[1]	R/O	0b	I^2C Base Address bit 1. This bit is fixed at 0.
UFTADD[0]	R/O	0b	I^2C base address bit 0. This address bit reflects the status of the S_A0 external input pin. See *Pin Description Table,* Table 1, on page 4.
Rsvd	R/W	-	Reserved. Always write 0 to this bit location. Read values are not defined.

NOTE 1: These values are specific to the device configuration 'dash-code'. Please refer to the *FemtoClock NG Universal Frequency Translator Ordering Product Information guide* for exact default values.

Table 6E. Digital PLL0 Input Control Register Bit Field Locations and Descriptions

Digital PLL0 Input Control Register Block Field Locations								
Address (Hex)	**D7**	**D6**	**D5**	**D4**	**D3**	**D2**	**D1**	**D0**
0008	REFSEL0[2:0]			FBSEL0[1:0]			RVRT0	SWMODE0
0009	11		10		PRI0_1[1:0]		PRI0_0[1:0]	
000A	1	1	REFDIS0_1	REFDIS0_0	Rsvd	Rsvd	STATE0[1:0]	
000B	Rsvd			PRE0_0[20:16]				
000C	PRE0_0[15:8]							
000D	PRE0_0[7:0]							
000E	Rsvd			PRE0_1[20:16]				
000F	PRE0_1[15:8]							
0010	PRE0_1[7:0]							
0011	Rsvd			Rsvd				
0012	Rsvd							
0013	Rsvd PRE0_2[7:0]							
0014	Rsvd			Rsvd				
0015	Rsvd							
0016	Rsvd							

Digital PLL0 Input Control Register Block Field Descriptions			
Bit Field Name	**Field Type**	**Default Value**	**Description**
REFSEL0[2:0]	R/W	000b	Input reference selection for Digital PLL0: 000 = Automatic selection 001 = Manual selection by GPIO inputs 010 through 011 = Reserved 100 = Force selection of Input Reference 0 101 = Force selection of Input Reference 1 110 = Do not use 111 = Do not use
FBSEL0[2:0]	R/W	000b	Feedback mode selection for Digital PLL0: 000 through 011 = internal feedback divider 100 = external feedback from Input Reference 0 101 = external feedback from Input Reference 1 110 = do not use 111 = do not use
RVRT0	R/W	1b	Automatic switching mode for Digital PLL0: 0 = non-revertive switching 1 = revertive switching
SWMODE0	R/W	1b	Controls how Digital PLL0 adjusts output phase when switching between input references: 0 = Absorb any phase differences between old & new input references 1 = Track to follow new input reference's phase using phase-slope limiting
PRI0_0[1:0]	R/W	00b	Switchover priority for Input Reference 0 when used by Digital PLL0: 00 = 1st priority 01 = 2nd priority 10 = do not use 11 = do not use

© 2019 Renesas Electronics Corporation

Digital PLL0 Input Control Register Block Field Descriptions			
Bit Field Name	**Field Type**	**Default Value**	**Description**
PRI0_1[1:0]	R/W	01b	Switchover priority for Input Reference 1 when used by Digital PLL0: 00 = 1st priority 01 = 2nd priority 10 = do not use 11 = do not use
REFDIS0_0	R/W	0b	Input Reference 0 Switching Selection Disable for Digital PLL0: 0 = Input Reference 0 is included in the switchover sequence for Digital PLL0 1 = Input Reference 0 is not included in the switchover sequence for Digital PLL0
REFDIS0_1	R/W	0b	Input Reference 1 Switching Selection Disable for Digital PLL0: 0 = Input Reference 1 is included in the switchover sequence for Digital PLL0 1 = Input Reference 1 is not included in the switchover sequence for Digital PLL0
STATE0[1:0]	R/W	00b	Digital PLL0 State Machine Control: 00 = Run automatically 01 = Force FREERUN state - set this if in Synthesizer Mode for PLL0 10 = Force NORMAL state 11 = Force HOLDOVER state
PRE0_0[20:0]	R/W	000000h	Pre-divider ratio for Input Reference 0 when used by Digital PLL0.
PRE0_1[20:0]	R/W	000000h	Pre-divider ratio for Input Reference 1 when used by Digital PLL0.
Rsvd	R/W	-	Reserved. Always write 0 to this bit location. Read values are not defined.

© 2019 Renesas Electronics Corporation

Table 6F. Digital PLL0 Feedback Control Register Bit Field Locations and Descriptions

Digital PLL0 Feedback Control Register Block Field Locations								
Address (Hex)	**D7**	**D6**	**D5**	**D4**	**D3**	**D2**	**D1**	**D0**
0017	M1_0_0[23:16]							
0018	M1_0_0[15:8]							
0019	M1_0_0[7:0]							
001A	M1_0_1[23:16]							
001B	M1_0_1[15:8]							
001C	M1_0_1[7:0]							
001D	Rsvd							
001E	Rsvd							
001F	Rsvd							
0020	Rsvd							
0021	Rsvd							
0022	Rsvd							
0023	LCKBW0[3:0]				ACQBW0[3:0]			
0024	LCKDAMP0[2:0]			ACQDAMP0[2:0]			PLLGAIN0[1:0]	
0025	TGLCKDMP0[2:0]			TGLCKHYS 0	TGLCKBW0[2:0]			Rsvd
0026	Rsvd							
0027	Rsvd							
0028	TGLCKTHR0[6:0]							Rsvd
0029	Rsvd							
002A	Rsvd							
002B	FFh							
002C	FFh							
002D	FFh							
002E	FFh							
002F	SLEW0[1:0]		Rsvd	HOLD0[1:0]		Rsvd	HOLDAVG0	FASTLCK0
0030	LOCK0[7:0]							
0031	Rsvd							DSM_INT0[8]
0032	DSM_INT0[7:0]							
0033	Rsvd			DSMFRAC0[20:16]				
0034	DSMFRAC0[15:8]							
0035	DSMFRAC0[7:0]							
0036	Rsvd							
0037	Rsvd							
0038	Rsvd							
0039	Rsvd							
003A	DSM_ORD0[1:0]		DCXOGAIN0[1:0]		Rsvd	DITHGAIN0[2:0]		

Digital PLL0 Feedback Configuration Register Block Field Descriptions			
Bit Field Name	**Field Type**	**Default Value**	**Description**
M1_0_0[23:0]	R/W	070000h	M1 Feedback divider ratio for Input Reference 0 when used by Digital PLL0.
M1_0_1[23:0]	R/W	070000h	M1 Feedback divider ratio for Input Reference 1 when used by Digital PLL0.
LCKBW0[3:0]	R/W	0111b	Digital PLL0 Loop Bandwidth while locked: 0000 = 512 mHz 0001 = 1 Hz 0010 = 2 Hz 0011 = 4 Hz 0100 = 8 Hz 0101 = 16 Hz 0110 = 32 Hz 0111 = 64 Hz 1000 = 128 Hz 1001 = 256 Hz 1010 = 512 Hz 1011 through 1111 = Reserved
ACQBW0[3:0]	R/W	0111b	Digital PLL0 Loop Bandwidth while in acquisition (not-locked): 0000 = 512 mHz 0001 = 1 Hz 0010 = 2 Hz 0011 = 4 Hz 0100 = 8 Hz 0101 = 16 Hz 0110 = 32 Hz 0111 = 64 Hz 1000 = 128 Hz 1001 = 256 Hz 1010 = 512 Hz 1011 through 1111 = Reserved
LCKDAMP0[2:0]	R/W	011b	Damping factor for Digital PLL0 while locked: 000 = Reserved 001 = 1 010 = 2 011 = 5 100 = 10 101 = 20 110 = Reserved 111 = Reserved
ACQDAMP0[2:0]	R/W	011b	Damping factor for Digital PLL0 while in acquisition (not locked): 000 = Reserved 001 = 1 010 = 2 011 = 5 100 = 10 101 = 20 110 = Reserved 111 = Reserved
PLLGAIN0[1:0]	R/W	01b	Digital Loop Filter Gain Settings for Digital PLL0: 00 = 0.5 01 = 1 10 = 1.5 11 = 2

© 2019 Renesas Electronics Corporation

Digital PLL0 Feedback Configuration Register Block Field Descriptions			
Bit Field Name	**Field Type**	**Default Value**	**Description**
TGLCKBW0[2:0]	R/W	011b	Loop Bandwidth Setting Used when PLL0 is in tight lock and phase error is very close to 0: 000 = off (use loop bandwidth LCKBW0[3:0]) 001 = 1Hz 010 = 2Hz 011 = 4Hz 100 = 8Hz 101 = 16Hz 110 = 32Hz 111 = 64Hz
TGLCKDMP0[2:0]	R/W	000b	Tight Lock Operation Damping Factor for PLL0: 000 = Off (Use Locked Damping Factor LCKDAMP0[2:0]) 001 = 1 010 = 2 011 = 5 100 = 10 101 = 20 110= Reserved 111 = Reserved
TGLCKHYS0	R/W	0b	Tight Lock Hysteresis Enable for PLL0. Indicates when Tight Lock Operation is entered/exited: 0 = Non-hysteresis - enter & exit when phase error crosses threshold in TGLCKTHR0[6:0] 1 = Hysteresis - enter when phase error less than 5nsec and exit when larger than TGLCKTHR0[6:0]
TGLCKTHR0[6:0]	R/W	00h	Tight Lock Threshold for PLL0, used to decide when to enter/exit Tight Lock operation. Effective value = (entered value + 2) * (PLL0 period * 8 = 2.0-2.67nsec). Range is 4-345nsec.
SLEW0[1:0]	R/W	00b	Phase-slope control for Digital PLL0: 00 = no limit - controlled by loop bandwidth of Digital PLL0 (NOTE[1]) 01 = 193 µsec/sec 10 = 24 µseC/sec 11 = Reserved
HOLD0[1:0]	R/W	00b	Holdover Averaging mode selection for Digital PLL0: 00 = Instantaneous mode - uses historical value 100ms prior to entering holdover 01 = Fast Average Mode 10 = Reserved 11 = Set VCO control voltage to $V_{CC}/2$
HOLDAVG0	R/W	0b	Holdover Averaging Enable for Digital PLL0: 0 = Holdover averaging disabled 1 = Holdover averaging enabled as defined in HOLD0[1:0]
FASTLCK0	R/W	0b	Enables Fast Lock operation for Digital PLL0: 0 = Normal locking using LCKBW0 & LCKDAMP0 fields in all cases 1 = Fast Lock mode using ACQBW0 & ACQDAMP0 when not phase locked and LCKBW0 & LCKDAMP0 once phase locked
LOCK0[7:0]	R/W	3Fh	Lock window size for Digital PLL0. Unsigned 2's complement binary number in steps of 2.5ns, giving a total range of 640ns. Do not program to 0.
DSM_INT0[8:0]	R/W	02Dh	Integer portion of the Delta-Sigma Modulator value.
DSMFRAC0[20:0]	R/W	000000h	Fractional portion of Delta-Sigma Modulator value. Divide this number by 2^{21} to determine the actual fraction.

© 2019 Renesas Electronics Corporation

Digital PLL0 Feedback Configuration Register Block Field Descriptions			
Bit Field Name	**Field Type**	**Default Value**	**Description**
DSM_ORD0[1:0]	R/W	11b	Delta-Sigma Modulator Order for Digital PLL0: 00 = Delta-Sigma Modulator disabled 01 = 1st order modulation 10 = 2nd order modulation 11 = 3rd order modulation
DCXOGAIN0[1:0]	R/W	01b	Multiplier applied to instantaneous frequency error before it is applied to the Digitally Controlled Oscillator in Digital PLL0: 00 = 0.5 01 = 1 10 = 2 11 = 4
DITHGAIN0[2:0]	R/W	000b	Dither Gain setting for Digital PLL0: 000 = no dither 001 = Least Significant Bit (LSB) only 010 = 2 LSBs 011 = 4 LSBs 100 = 8 LSBs 101 = 16 LSBs 110 = 32 LSBs 111 = 64 LSBs
Rsvd	R/W	-	Reserved. Always write 0 to this bit location. Read values are not defined.

NOTE 1: Settings other than “00” may result in a significant increase in initial lock time.

Table 6G. Digital PLL1 Input Control Register Bit Field Locations and Descriptions

Digital PLL1 Input Control Register Block Field Locations								
Address (Hex)	**D7**	**D6**	**D5**	**D4**	**D3**	**D2**	**D1**	**D0**
003B	REFSEL1[2:0]			FBSEL1[1:0]			RVRT1	SWMODE1
003C	11		10		PRI1_1[1:0]		PRI1_0[1:0]	
003D	1	1	REFDIS1_1	REFDIS1_0	Rsvd	Rsvd	STATE1[1:0]	
003E	Rsvd			PRE1_0[20:16]				
003F	PRE1_0[15:8]							
0040	PRE1_0[7:0]							
0041	Rsvd			PRE1_1[20:16]				
0042	PRE1_1[15:8]							
0043	PRE1_1[7:0]							
0044	Rsvd			Rsvd				
0045	Rsvd							
0046	Rsvd							
0047	Rsvd			Rsvd				
0048	Rsvd							
0049	Rsvd							

Digital PLL1 Input Control Register Block Field Descriptions			
Bit Field Name	**Field Type**	**Default Value**	**Description**
REFSEL1[2:0]	R/W	000b	Input reference selection for Digital PLL1: 000 = Automatic selection 001 = Manual selection by GPIO inputs 010 through 011 = Reserved 100 = Force selection of Input Reference 0 101 = Force selection of Input Reference 1 110 = do not use 111 = do not use
FBSEL1[2:0]	R/W	000b	Feedback mode selection for Digital PLL1: 000 through 011 = internal feedback divider 100 = external feedback from Input Reference 0 101 = external feedback from Input Reference 1 110 = do not use 111 = do not use
RVRT1	R/W	1b	Automatic switching mode for Digital PLL1: 0 = non-revertive switching 1 = revertive switching
SWMODE1	R/W	1b	Controls how Digital PLL1 adjusts output phase when switching between input references: 0 = Absorb any phase differences between old & new input references 1 = Track to follow new input reference's phase using phase-slope limiting
PRI1_0[1:0]	R/W	00b	Switchover priority for Input Reference 0 when used by Digital PLL1: 00 = 1st priority 01 = 2nd priority 10 = do not use 11 = do not use

© 2019 Renesas Electronics Corporation

Digital PLL1 Input Control Register Block Field Descriptions			
Bit Field Name	**Field Type**	**Default Value**	**Description**
PRI1_1[1:0]	R/W	01b	Switchover priority for Input Reference 1 when used by Digital PLL1: 00 = 1st priority 01 = 2nd priority 10 = do not use 11 = do not use
REFDIS1_0	R/W	0b	Input Reference 0 Switching Selection Disable for Digital PLL1: 0 = Input Reference 0 is included in the switchover sequence for Digital PLL1 1 = Input Reference 0 is not included in the switchover sequence for Digital PLL1
REFDIS1_1	R/W	0b	Input Reference 1 Switching Selection Disable for Digital PLL1: 0 = Input Reference 1 is included in the switchover sequence for Digital PLL1 1 = Input Reference 1 is not included in the switchover sequence for Digital PLL1
STATE1[1:0]	R/W	00b	Digital PLL1 State Machine Control: 00 = Run automatically 01 = Force FREERUN state - set this if in Synthesizer Mode for PLL1. 10 = Force NORMAL state 11 = Force HOLDOVER state
PRE1_0[20:0]	R/W	000000h	Pre-divider ratio for Input Reference 0 when used by Digital PLL1.
PRE1_1[20:0]	R/W	000000h	Pre-divider ratio for Input Reference 1 when used by Digital PLL1.
Rsvd	R/W	-	Reserved. Always write 0 to this bit location. Read values are not defined.

© 2019 Renesas Electronics Corporation

Table 6H. Digital PLL1 Feedback Control Register Bit Field Locations and Descriptions

Digital PLL1 Feedback Control Register Block Field Locations								
Address (Hex)	**D7**	**D6**	**D5**	**D4**	**D3**	**D2**	**D1**	**D0**
004A	M1_1_0[23:16]							
004B	M1_1_0[15:8]							
004C	M1_1_0[7:0]							
004D	M1_1_1[23:16]							
004E	M1_1_1[15:8]							
004F	M1_1_1[7:0]							
0050	Rsvd							
0051	Rsvd							
0052	Rsvd							
0053	Rsvd							
0054	Rsvd							
0055	Rsvd							
0056	LCKBW1[3:0]				ACQBW1[3:0]			
0057	LCKDAMP1[2:0]			ACQDAMP1[2:0]			PLLGAIN1[1:0]	
0058	TGLCKDMP1[2:0]			TGLCKHYS1	TGLCKBW1[2:0]			Rsvd
0059	Rsvd							
005A	Rsvd							
005B	TGLCKTHR1[6:0]							Rsvd
005C	Rsvd							
005D	Rsvd							
005E	FFh							
005F	FFh							
0060	FFh							
0061	FFh							
0062	SLEW1[1:0]		Rsvd	HOLD1[1:0]		Rsvd	HOLDAVG1	FASTLCK1
0063	LOCK1[7:0]							
0064	Rsvd							DSM_INT1[8]
0065	DSM_INT1[7:0]							
0066	Rsvd			DSMFRAC1[20:16]				
0067	DSMFRAC1[15:8]							
0068	DSMFRAC1[7:0]							
0069	Rsvd							
006A	Rsvd							
006B	Rsvd							
006C	Rsvd							
006D	DSM_ORD1[1:0]		DCXOGAIN1[1:0]		Rsvd	DITHGAIN1[2:0]		

© 2019 Renesas Electronics Corporation

Digital PLL1 Feedback Configuration Register Block Field Descriptions			
Bit Field Name	**Field Type**	**Default Value**	**Description**
M1_1_0[23:0]	R/W	070000h	M1 Feedback divider ratio for Input Reference 0 when used by Digital PLL1.
M1_1_1[23:0]	R/W	070000h	M1 Feedback divider ratio for Input Reference 1 when used by Digital PLL1.
LCKBW1[3:0]	R/W	0111b	Digital PLL1 Loop Bandwidth while locked: 0000 = 512 mHz 0001 = 1 Hz 0010 = 2 Hz 0011 = 4 Hz 0100 = 8 Hz 0101 = 16 Hz 0110 = 32 Hz 0111 = 64 Hz 1000 = 128 Hz 1001 = 256 Hz 1010 = 512 Hz 1011 through 1111 = Reserved
ACQBW1[3:0]	R/W	0111b	Digital PLL1 Loop Bandwidth while in acquisition (not-locked): 0000 = 512 mHz 0001 = 1 Hz 0010 = 2 Hz 0011 = 4 Hz 0100 = 8 Hz 0101 = 16 Hz 0110 = 32 Hz 0111 = 64 Hz 1000 = 128 Hz 1001 = 256 Hz 1010 = 512 Hz 1011 through 1111 = Reserved
LCKDAMP1[2:0]	R/W	011b	Damping factor for Digital PLL1 while locked: 000 = Reserved 001 = 1 010 = 2 011 = 5 100 = 10 101 = 20 110 = Reserved 111 = Reserved
ACQDAMP1[2:0]	R/W	011b	Damping factor for Digital PLL1 while in acquisition (not locked): 000 = Reserved 001 = 1 010 = 2 011 = 5 100 = 10 101 = 20 110 = Reserved 111 = Reserved
PLLGAIN1[1:0]	R/W	01b	Digital Loop Filter Gain Settings for Digital PLL1: 00 = 0.5 01 = 1 10 = 1.5 11 = 2

© 2019 Renesas Electronics Corporation

Digital PLL1 Feedback Configuration Register Block Field Descriptions			
Bit Field Name	**Field Type**	**Default Value**	**Description**
TGLCKBW1[2:0]	R/W	011b	Loop Bandwidth Setting Used when PLL1 is in tight lock and phase error is very close to 0: 000 = off (use loop bandwidth LCKBW1[3:0]) 001 = 1Hz 010 = 2Hz 011 = 4Hz 100 = 8Hz 101 = 16Hz 110 = 32Hz 111 = 64Hz
TGLCKDMP1[2:0]	R/W	000b	Tight Lock Operation Damping Factor for PLL1: 000 = Off (Use Locked Damping Factor LCKDAMP1[2:0]) 001 = 1 010 = 2 011 = 5 100 = 10 101 = 20 110 = Reserved 111 = Reserved
TGLCKHYS1	R/W	0b	Tight Lock Hysteresis Enable for PLL1. Indicates when Tight Lock Operation is entered/exited: 0 = Non-hysteresis - enter & exit when phase error crosses threshold in TGLCKTHR1[6:0] 1 = Hysteresis - enter when phase error less than 5nsec and exit when larger than TGLCKTHR1[6:0]
TGLCKTHR1[6:0]	R/W	00h	Tight Lock Threshold for PLL1, used to decide when to enter/exit Tight Lock operation. Effective value = (entered value + 2) * (PLL0 period * 8 = 2.0-2.67nsec). Range is 4-345nsec.
SLEW1[1:0]	R/W	00b	Phase-slope control for Digital PLL1: 00 = no limit - controlled by loop bandwidth of Digital PLL0 (NOTE[1]) 01 = 193 µsec/sec 10 = 24 µsec/sec 11 = Reserved
HOLD1[1:0]	R/W	00b	Holdover Averaging mode selection for Digital PLL1: 00 = Instantaneous mode - uses historical value 100ms prior to entering holdover 01 = Fast Average Mode 10 = Reserved 11 = Set VCO control voltage to $V_{CC}/2$
HOLDAVG1	R/W	0b	Holdover Averaging Enable for Digital PLL1: 0 = Holdover averaging disabled 1 = Holdover averaging enabled as defined in HOLD1[1:0]
FASTLCK1	R/W	0b	Enables Fast Lock operation for Digital PLL1: 0 = Normal locking using LCKBW1 & LCKDAMP1 fields in all cases 1 = Fast Lock mode using ACQBW1 & ACQDAMP1 when not phase locked and LCKBW1 & LCKDAMP1 once phase locked
LOCK1[7:0]	R/W	3Fh	Lock window size for Digital PLL1. Unsigned 2's complement binary number in steps of 2.5ns, giving a total range of 640ns. Do not program to 0.
DSM_INT1[8:0]	R/W	02Dh	Integer portion of the Delta-Sigma Modulator value.
DSMFRAC1[20:0]	R/W	000000h	Fractional portion of Delta-Sigma Modulator value. Divide this number by 2^{21} to determine the actual fraction.

Digital PLL1 Feedback Configuration Register Block Field Descriptions			
Bit Field Name	**Field Type**	**Default Value**	**Description**
DSM_ORD1[1:0]	R/W	11b	Delta-Sigma Modulator Order for Digital PLL1: 00 = Delta-Sigma Modulator disabled 01 = 1st order modulation 10 = 2nd order modulation 11 = 3rd order modulation
DCXOGAIN1[1:0]	R/W	01b	Multiplier applied to instantaneous frequency error before it is applied to the Digitally Controlled Oscillator in Digital PLL1: 00 = 0.5 01 = 1 10 = 2 11 = 4
DITHGAIN1[2:0]	R/W	000b	Dither Gain setting for Digital PLL1: 000 = no dither 001 = Least Significant Bit (LSB) only 010 = 2 LSBs 011 = 4 LSBs 100 = 8 LSBs 101 = 16 LSBs 110 = 32 LSBs 111 = 64 LSBs
Rsvd	R/W	-	Reserved. Always write 0 to this bit location. Read values are not defined.

NOTE 1: Settings other than “00” may result in a significant increase in initial lock time.

Table 6l. GPIO Control Register Bit Field Locations and Descriptions

The values observed on any GPIO pins that are used as general purpose inputs are visible in the GPI[3:0] register that is located at location 0219h near a number of other read-only registers.

GPIO Control Register Block Field Locations								
Address (Hex)	**D7**	**D6**	**D5**	**D4**	**D3**	**D2**	**D1**	**D0**
006E	Rsvd				GPIO_DIR[3:0]			
006F	Rsvd				GPI3SEL[2]	GPI2SEL[2]	GPI1SEL[2]	GPI0SEL[2]
0070	Rsvd				GPI3SEL[1]	GPI2SEL[1]	GPI1SEL[1]	GPI0SEL[1]
0071	Rsvd				GPI3SEL[0]	GPI2SEL[0]	GPI1SEL[0]	GPI0SEL[0]
0072	Rsvd				GPO3SEL[2]	GPO2SEL[2]	GPO1SEL[2]	GPO0SEL[2]
0073	Rsvd				GPO3SEL[1]	GPO2SEL[1]	GPO1SEL[1]	GPO0SEL[1]
0074	Rsvd				GPO3SEL[0]	GPO2SEL[0]	GPO1SEL[0]	GPO0SEL[0]
0075	Rsvd							
0076	Rsvd				GPO[3:0]			

GPIO Control Register Block Field Descriptions			
Bit Field Name	**Field Type**	**Default Value**	**Description**
GPIO_DIR[3:0]	R/W	00h	Direction control for General-Purpose I/O Pins GPIO[3:0]: 0 = input mode 1 = output mode
GPI0SEL[2:0]	R/W	000b	Function of GPIO[0] pin when set to input mode by GPIO_DIR[0] register bit: 000 = General Purpose Input (value on GPIO[0] pin directly reflected in GPI[0] register bit) 001 = Output Enable control for output Q0 010 = Output Enable control for output Q4 011 = reserved 100 through 111 = reserved
GPI1SEL[2:0]	R/W	000b	Function of GPIO[1] pin when set to input mode by GPIO_DIR[1] register bit: 000 = General Purpose Input (value on GPIO[1] pin directly reflected in GPI[1] register bit) 001 = Output Enable control for output Q1 010 = Output Enable control for output Q5 011 through 111 = reserved
GPI2SEL[2:0]	R/W	000b	Function of GPIO[2] pin when set to input mode by GPIO_DIR[2] register bit: 000 = General Purpose Input (value on GPIO[2] pin directly reflected in GPI[2] register bit) 001 = Output Enable control for output Q2 010 = Output Enable control for output Q6 011 = reserved 100 = reserved 101 = CSEL0: Manual Clock Select Input for PLL0 110 through 111 = reserved
GPI3SEL[2:0]	R/W	000b	Function of GPIO[3] pin when set to input mode by GPIO_DIR[3] register bit: 000 = General Purpose Input (value on GPIO[3] pin directly reflected in GPI[3] register bit) 001 = Output Enable control for output Q3 010 = Output Enable control for output Q7 011 = reserved 101 = CSEL1: Manual Clock Select Input for PLL1 100, 110, 111 = reserved

GPIO Control Register Block Field Descriptions			
Bit Field Name	**Field Type**	**Default Value**	**Description**
GPO0SEL[2:0]	R/W	000b	Function of GPIO[0] pin when set to output mode by GPIO_DIR[0] register bit: 000 = General Purpose Output (value in GPO[0] register bit driven on GPIO[0] pin 001 = Loss-of-Lock Status Flag for Digital PLL0 reflected on GPIO[0] pin 010 = Loss-of-Lock Status Flag for Digital PLL1 reflected on GPIO[0] pin 011 = reserved 100 = reserved 101 = reserved 110 through 111 = reserved
GPO1SEL[2:0]	R/W	000b	Function of GPIO[1] pin when set to output mode by GPIO_DIR[1] register bit: 000 = General Purpose Output (value in GPO[1] register bit driven on GPIO[1] pin 001 = Holdover Status Flag for Digital PLL0 reflected on GPIO[1] pin 010 = Holdover Status Flag for Digital PLL1 reflected on GPIO[1] pin 011 = reserved 100 = reserved 101 = reserved 110 = reserved 111 = reserved
GPO2SEL[2:0]	R/W	000b	Function of GPIO[2] pin when set to output mode by GPIO_DIR[2] register bit: 000 = General Purpose Output (value in GPO[2] register bit driven on GPIO[2] pin 001 = Loss-of-Signal Flag for Input Reference 0 reflected on GPIO[2] pin 010 = Loss-of-Signal Flag for Input Reference 1 reflected on GPIO[2] pin 011 = reserved 100 = reserved 101 through 111 = reserved
GPO3SEL[2:0]	R/W	000b	Function of GPIO[3] pin when set to output mode by GPIO_DIR[3] register bit: 000 = General Purpose Output (value in GPO[3] register bit driven on GPIO[3] pin 001 = Loss-of-Lock Status Flag for Digital PLL1 reflected on GPIO[3] pin 010 = Loss-of-Signal Status Flag for Input Reference 1 reflected on GPIO[3] pin 011 = reserved 100 = reserved 101 through 111 = reserved
GPO[3:0]	R/W	00h	Output Values reflect on pin GPIO[3:0] when General-Purpose Output Mode selected.
Rsvd	R/W	-	Reserved. Always write 0 to this bit location. Read values are not defined.

© 2019 Renesas Electronics Corporation

Table 6J. Output Driver Control Register Bit Field Locations and Descriptions

Output Driver Control Register Block Field Locations								
Address (Hex)	**D7**	**D6**	**D5**	**D4**	**D3**	**D2**	**D1**	**D0**
0077	OUTEN[7:0]							
0078	POL_Q[7:0]							
0079	OUTMODE7[2:0]			SE_MODE7	OUTMODE6[2:0]			SE_MODE6
007A	OUTMODE5[2:0]			SE_MODE5	OUTMODE4[2:0]			SE_MODE4
007B	OUTMODE3[2:0]			SE_MODE3	OUTMODE2[2:0]			SE_MODE2
007C	OUTMODE1[2:0]			SE_MODE1	OUTMODE0[2:0]			SE_MODE0

Output Driver Control Register Block Field Descriptions			
Bit Field Name	**Field Type**	**Default Value**	**Description**
OUTEN[7:0]	R/W	00h	Output Enable control for Clock Outputs Q[7:0], nQ[7:0]: 0 = Qn is in a high-impedance state 1 = Qn is enabled as indicated in appropriate OUTMODEn[2:0] register field
POL_Q[7:0]	R/W	00h	Polarity of Clock Outputs Q[7:0], nQ[7:0]: 0 = normal polarity 1 = inverted polarity
OUTMODEm[2:0]	R/W	001b	Output Driver Mode of Operation for Clock Output Pair Qm, nQm: 000 = High-impedance 001 = LVPECL 010 = LVDS 011 = LVCMOS 100 = reserved 101 - 111 = reserved
SE_MODEm	R/W	0b	Behavior of Output Pair Qm, nQm when LVCMOS operation is selected: (Must be 0 if LVDS or LVPECL output style is selected) 0 = Qm and nQm are both the same frequency but inverted in phase 1 = Qm and nQm are both the same frequency and phase

© 2019 Renesas Electronics Corporation

Table 6K. Output Divider Control Register Bit Field Locations and Descriptions

Output Divider Control Register Block Field Locations								
Address (Hex)	**D7**	**D6**	**D5**	**D4**	**D3**	**D2**	**D1**	**D0**
007D	Rsvd						NS1_Q0[1:0]	
007E	NS2_Q0[15:8]							
007F	NS2_Q0[7:0]							
0080	Rsvd						NS1_Q1[1:0]	
0081	NS2_Q1[15:8]							
0082	NS2_Q1[7:0]							
0083	Rsvd						N_Q2[17:16]	
0084	N_Q2[15:8]							
0085	N_Q2[7:0]							
0086	Rsvd						N_Q3[17:16]	
0087	N_Q3[15:8]							
0088	N_Q3[7:0]							
0089	Rsvd						NS1_Q4[1:0]	
008A	NS2_Q4[15:8]							
008B	NS2_Q4[7:0]							
008C	Rsvd						NS1_Q5[1:0]	
008D	NS2_Q5[15:8]							
008E	NS2_Q5[7:0]							
008F	Rsvd						NS1_Q6[1:0]	
0090	NS2_Q6[15:8]							
0091	NS2_Q6[7:0]							
0092	Rsvd						NS1_Q7[1:0]	
0093	NS2_Q7[15:8]							
0094	NS2_Q7[7:0]							
0095	Rsvd				NFRAC_Q2[27:24]			
0096	NFRAC_Q2[23:16]							
0097	NFRAC_Q2[15:8]							
0098	NFRAC_Q2[7:0]							
0099	Rsvd				NFRAC_Q3[27:24]			
009A	NFRAC_Q3[23:16]							
009B	NFRAC_Q3[15:8]							
009C	NFRAC_Q3[7:0]							

© 2019 Renesas Electronics Corporation

Output Divider Control Register Block Field Descriptions			
Bit Field Name	**Field Type**	**Default Value**	**Description**
NS1_Qm[1:0] (m = 0, 1)	R/W	10b	1st Stage Output Divider Ratio for Output Clock Qm, nQm (m = 0, 1): 00 = /5 01 = /6 10 = /4 11 = Output Qm, nQm not switching
NS1_Qm[1:0] (m = 4, 5, 6, 7)	R/W	10b	1st Stage Output Divider Ratio for Output Clock Qm, nQm (m = 4, 5, 6, 7): 00 = /5 01 = /6 10 = /4 11 = /1 (Do not use this selection if PLL0 or PLL1 are the source since the 2nd-stage divider has a limit of 1GHz).
NS2_Qm[15:0]	R/W	0002h	2nd Stage Output Divider Ratio for Output Clock Qm, nQm (m = 0, 1, 4, 5, 6, 7): Actual divider ratio is 2x the value written here. A value of 0 in this register will bypass the second stage of the divider.
N_Qm[17:0]	R/W	00008h	Integer Portion of Output Divider Ratio for Output Clock Qm, nQm (m = 2, 3): Values of 0, 1 or 2 cannot be written to this register. Actual divider ratio is 2x the value written here.
NFRAC_Qm[27:0]	R/W	0000000h	Fractional Portion of Output Divider Ratio for Output Clock Qm, nQm (m = 2, 3): Actual fractional portion is 2x the value written here. Fraction = (NFRAC_Qm * 2) * 2^{-28}
Rsvd	R/W	-	Reserved. Always write 0 to this bit location. Read values are not defined.

Table 6L. Output Clock Phase Adjustment Control Register Bit Field Locations and Descriptions

Output Clock Phase Adjustment Control Control Register Block Field Locations								
Address (Hex)	**D7**	**D6**	**D5**	**D4**	**D3**	**D2**	**D1**	**D0**
009D	CRSE_TRG[7:0]							
009E	Rsvd			COARSE0[4:0]				
009F	Rsvd			COARSE1[4:0]				
00A0	Rsvd			COARSE2[4:0]				
00A1	Rsvd			COARSE3[4:0]				
00A2	Rsvd			COARSE4[4:0]				
00A3	Rsvd			COARSE5[4:0]				
00A4	Rsvd			COARSE6[4:0]				
00A5	Rsvd			COARSE7[4:0]				
00A6	Rsvd				FINE2[3:0]			
00A7	Rsvd				FINE3[3:0]			

Output Clock Phase Adjustment Control Control Register Block Field Descriptions			
Bit Field Name	**Field Type**	**Default Value**	**Description**
CRSE_TRG[7:0]	R/W	00h	Trigger Coarse Phase Adjustment for output Qm, nQm by amount specified in COARSEm[4:0] register upon 0→1 transition of this Trigger register bit. Please ensure the PA_BUSYm status bit is 0 before triggering another adjustment cycle on that particular output. Trigger bit must be returned to 0 before another delay cycle can be triggered.
COARSEm[4:0]	R/W	00000b	Number of periods to be inserted when Trigger happens. Relevant clock period is determined by the clock source selected for output Qm, nQm in its CLK_SELm register field.
FINEm[3:0]	R/W	0000b	Number of 1/16ths of the relevant clock period to add to the phase of output Qm, nQm (m = 2, 3). Relevant clock period is determined by the clock source selected for output Qm, nQm in its CLK_SELm register field. The PLLn_SYN bit for the PLL driving the output divider for the output in question must be toggled to make this value take effect. Note that toggling the PLLn_SYN bit will clear all Coarse delay values and so Fine delay should be set first.
Rsvd	R/W	-	Reserved. Always write 0 to this bit location. Read values are not defined.

Table 6M. Output Clock Source Control Register Bit Field Locations and Descriptions

Output Clock Source Control Register Block Field Locations								
Address (Hex)	**D7**	**D6**	**D5**	**D4**	**D3**	**D2**	**D1**	**D0**
00A8	Rsvd		PLL1_SYN	PLL0_SYN	CLK_SEL3	CLK_SEL2	CLK_SEL1	CLK_SEL0
00A9	Rsvd	CLK_SEL5[2:0]			Rsvd	CLK_SEL4[2:0]		
00AA	Rsvd	CLK_SEL7[2:0]			Rsvd	CLK_SEL6[2:0]		
00AB	10		10		Rsvd		Rsvd	

Output Clock Source Control Register Block Field Descriptions			
Bit Field Name	**Field Type**	**Default Value**	**Description**
PLL1_SYN	R/W	0b	Output Synchronization Control for Outputs Derived from PLL1: Setting this bit from 0→1 will cause the output divider(s) for the affected outputs to be held in reset. Setting this bit from 1→0 will release all the output divider(s) for the affected outputs to run from the same point in time with the coarse output phase adjustment reset to 0.
PLL0_SYN	R/W	0b	Output Synchronization Control for Outputs Derived from PLL0: Setting this bit from 0→1 will cause the output divider(s) for the affected outputs to be held in reset. Setting this bit from 1→0 will release all the output divider(s) for the affected outputs to run from the same point in time with the coarse output phase adjustment reset to 0.
CLK_SEL0	R/W	0b	Clock Source Selection for output Q0, nQ0: 0 = PLL0 1 = PLL1
CLK_SEL1	R/W	1b	Clock Source Selection for output Q1, nQ1: 0 = PLL0 1 = PLL1
CLK_SEL2	R/W	0b	Clock Source Selection for output Q2, nQ2: 0 = PLL0 1 = PLL1
CLK_SEL3	R/W	1b	Clock Source Selection for output Q3, nQ3: 0 = PLL0 1 = PLL1
CLK_SEL4[2:0]	R/W	000b	Clock Source Selection for output Q4, nQ4. Do not select Input Reference 0 or 1 if that input is faster than 250MHz. 000 = PLL0 001 = PLL1 010 = Output Q2, nQ2 011 = Output Q3, nQ3 100 = Input Reference 0 (CLK0) 101 = Input Reference 1 (CLK1) 110 = Reserved 111 = Crystal input
CLK_SEL5[2:0]	R/W	010b	Clock Source Selection for output Q5, nQ5. Do not select Input Reference 0 or 1 if that input is faster than 250MHz. 000 = PLL0 001 = PLL1 010 = Output Q2, nQ2 011 = Output Q3, nQ3 100 = Input Reference 0 (CLK0) 101 = Input Reference 1 (CLK1) 110 = Reserved 111 = Crystal input

© 2019 Renesas Electronics Corporation

Output Clock Source Control Register Block Field Descriptions			
Bit Field Name	**Field Type**	**Default Value**	**Description**
CLK_SEL6[2:0]	R/W	000b	Clock Source Selection for output Q6, nQ6. Do not select Input Reference 0 or 1 if that input is faster than 250MHz. 000 = PLL0 001 = PLL1 010 = Output Q2, nQ2 011 = Output Q3, nQ3 100 = Input Reference 0 (CLK0) 101 = Input Reference 1 (CLK1) 110 = Reserved 111 = Crystal input
CLK_SEL7[2:0]	R/W	101b	Clock Source Selection for output Q7, nQ7. Do not select Input Reference 0 or 1 if that input is faster than 250MHz. 000 = PLL0 001 = PLL1 010 = Output Q2, nQ2 011 = Output Q3 nQ3 100 = Input Reference 0 (CLK0) 101 = Input Reference 1 (CLK1) 110 = Reserved 111 = Crystal input
Rsvd	R/W	-	Reserved. Always write 0 to this bit location. Read values are not defined.

© 2019 Renesas Electronics Corporation

Table 6N. Analog PLL0 Control Register Bit Field Locations and Descriptions

Please contact IDT through one of the methods listed on the last page of this datasheet for details on how to set these fields for a particular user configuration.

Analog PLL0 Control Register Block Field Locations								
Address (Hex)	**D7**	**D6**	**D5**	**D4**	**D3**	**D2**	**D1**	**D0**
00AC	CPSET_0[2:0]			RS_0[1:0]		CP_0[1:0]		WPOST_0
00AD	Rsvd				SYN_MODE 0	Rsvd	DLCNT_0	DBITM_0
00AE	Rsvd		VCOMAN_0	DBIT1_0[4:0]				
00AF	Rsvd			DBIT2_0[4:0]				

Analog PLL0 Control Register Block Field Descriptions			
Bit Field Name	**Field Type**	**Default Value**	**Description**
CPSET_0[2:0]	R/W	100b	Charge Pump Current Setting for Analog PLL0: 000 = 110µA 001 = 220µA 010 = 330µA 011 = 440µA 100 = 550µA 101 = 660µA 110 = 770µA 111 = 880µA
RS_0[1:0]	R/W	01b	Internal Loop Filter Series Resistor Setting for Analog PLL0: 00 = 330 Ω 01 = 640 Ω 10 = 1.2k Ω 11 = 1.79 kΩ
CP_0[1:0]	R/W	01b	Internal Loop Filter Parallel Capacitor Setting for Analog PLL0: 00 = 40pF 01 = 80pF 10 = 140pF 11 = 200pF
WPOST_0	R/W	1b	Internal Loop Filter 2nd-Pole Setting for Analog PLL0: 0 = Rpost = 497 Ω, Cpost = 40pF 1 = Rpost = 1.58 kΩ, Cpost = 40pF
DLCNT_0	R/W	1b	Digital Lock Count Setting for Analog PLL0: Value should be set to 0 (1ppm accuracy) if external capacitor value is >95nF, otherwise set to 1. 0 = 1ppm accuracy 1 = 16ppm accuracy
DBITM_0	R/W	0b	Digital Lock Manual Override Setting for Analog PLL0: 0 = Automatic Mode 1 = Manual Mode
VCOMAN_0	R/W	1b	Manual Lock Mode VCO Selection Setting for Analog PLL0: 0 = VCO2 1 = VCO1
DBIT1_0[4:0]	R/W	01011b	Manual Mode Digital Lock Control Setting for VCO1 in Analog PLL0.

Analog PLL0 Control Register Block Field Descriptions			
Bit Field Name	**Field Type**	**Default Value**	**Description**
DBIT2_0[4:0]	R/W	00000b	Manual Mode Digital Lock Control Setting for VCO2 in Analog PLL0.
SYN_MODE0	R/W	0b	Frequency Synthesizer Mode Control for PLL0: 0 = PLL0 jitter attenuates and translates one or more input references 1 = PLL0 synthesizes output frequencies using only the crystal as a reference Note that the STATE0[1:0] field in the Digital PLL0 Control Register must be set to Force Freerun state.
Rsvd	R/W	-	Reserved. Always write 0 to this bit location. Read values are not defined.

Table 6O. Analog PLL1 Control Register Bit Field Locations and Descriptions

Please contact IDT through one of the methods listed on the last page of this datasheet for details on how to set these fields for a particular user configuration.

Analog PLL1 Control Register Block Field Locations								
Address (Hex)	**D7**	**D6**	**D5**	**D4**	**D3**	**D2**	**D1**	**D0**
00B0	CPSET_1[2:0]			RS_1[1:0]		CP_1[1:0]		WPOST_1
00B1	Rsvd				SYN_MODE1	Rsvd	DLCNT_1	DBITM_1
00B2	Rsvd		VCOMAN_1	DBIT1_1[4:0]				
00B3	Rsvd			DBIT2_1[4:0]				

Analog PLL1 Control Register Block Field Descriptions			
Bit Field Name	**Field Type**	**Default Value**	**Description**
CPSET_1[2:0]	R/W	100b	Charge Pump Current Setting for Analog PLL1: 000 = 110µA 001 = 220µA 010 = 330µA 011 = 440µA 100 = 550µA 101 = 660µA 110 = 770µA 111 = 880µA
RS_1[1:0]	R/W	01b	Internal Loop Filter Series Resistor Setting for Analog PLL1: 00 = 330 Ω 01 = 640 Ω 10 = 1.2 kΩ 11 = 1.79 kΩ
CP_1[1:0]	R/W	01b	Internal Loop Filter Parallel Capacitor Setting for Analog PLL1: 00 = 40pF 01 = 80pF 10 = 140pF 11 = 200pF
WPOST_1	R/W	1b	Internal Loop Filter 2nd-Pole Setting for Analog PLL1: 0 = Rpost = 497 Ω, Cpost = 40pF 1 = Rpost = 1.58 kΩ, Cpost = 40pF
DLCNT_1	R/W	1b	Digital Lock Count Setting for Analog PLL1: Value should be set to 0 (1ppm accuracy) if external capacitor value is >95nF, otherwise set to 1. 0 = 1ppm accuracy 1 = 16ppm accuracy
DBITM_1	R/W	0b	Digital Lock Manual Override Setting for Analog PLL1: 0 = Automatic Mode 1 = Manual Mode

Analog PLL1 Control Register Block Field Descriptions			
Bit Field Name	**Field Type**	**Default Value**	**Description**
VCOMAN_1	R/W	1b	Manual Lock Mode VCO Selection Setting for Analog PLL1: 0 = VCO2 1 = VCO1
DBIT1_1[4:0]	R/W	01011b	Manual Mode Digital Lock Control Setting for VCO1 in Analog PLL1.
DBIT2_1[4:0]	R/W	00000b	Manual Mode Digital Lock Control Setting for VCO2 in Analog PLL1.
SYN_MODE1	R/W	0b	Frequency Synthesizer Mode Control for PLL1: 0 = PLL1 jitter attenuates and translates one or more input references 1 = PLL1 synthesizes output frequencies using only the crystal as a reference Note that the STATE1[1:0] field in the Digital PLL1 Control Register must be set to Force Freerun state.
Rsvd	R/W	-	Reserved. Always write 0 to this bit location. Read values are not defined.

Table 6P. Power Down Control Register Bit Field Locations and Descriptions

Power Down Control Register Block Field Locations								
Address (Hex)	**D7**	**D6**	**D5**	**D4**	**D3**	**D2**	**D1**	**D0**
00B4	Rsvd							DBL_DIS
00B5	Rsvd				1	1	CLK1_DIS	CLK0_DIS
00B6	Rsvd			PLL1_DIS	Rsvd			
00B7	Q7_DIS	Q6_DIS	Q5_DIS	Q4_DIS	Q3_DIS	Q2_DIS	Q1_DIS	Q0_DIS
00B8	Rsvd				DPLL1_DIS	DPLL0_DIS	CALRST1	CALRST0

Power Down Control Register Block Field Descriptions			
Bit Field Name	**Field Type**	**Default Value**	**Description**
DBL_DIS	R/W	0b	Controls whether Crystal Input Frequency is Doubled before Being used in PLL0 or PLL1: 0 = 2x Actual Crystal Frequency Used 1 = Actual Crystal Frequency Used
CLKm_DIS	R/W	0b	Disable Control for Input Reference m: 0 = Input Reference m is Enabled 1 = Input Reference m is Disabled
PLL1_DIS	R/W	0b	Disable Control for Analog PLL1: 0 = PLL1 Enabled 1 = Analog PLL1 Disabled
Qm_DIS	R/W	0b	Disable Control for Output Qm, nQm: 0 = Output Qm, nQm functions normally 1 = All logic associated with Output Qm, nQm is Disabled & Driver in High-Impedance state
DPLLm_DIS	R/W	0b	Disable Control for Digital PLLm: 0 = Digital PLLm Enabled 1 = Digital PLLm Disabled
CALRSTm	R/W	0b	Reset Calibration Logic for APLLm: 0 = Calibration Logic for APLLm Enabled 1 = Calibration Logic for APLLm Disabled
Rsvd	R/W	-	Reserved. Always write 0 to this bit location. Read values are not defined.

© 2019 Renesas Electronics Corporation

Table 6Q. Input Monitor Control Register Bit Field Locations and Descriptions

Input Monitor Control Register Block Field Locations								
Address (Hex)	**D7**	**D6**	**D5**	**D4**	**D3**	**D2**	**D1**	**D0**
00B9	Rsvd							LOS_0[16]
00BA	LOS_0[15:8]							
00BB	LOS_0[7:0]							
00BC	Rsvd							LOS_1[16]
00BD	LOS_1[15:8]							
00BE	LOS_1[7:0]							
00BF	Rsvd							Rsvd
00C0	Rsvd							
00C1	Rsvd							
00C2	Rsvd							Rsvd
00C3	Rsvd							
00C4	Rsvd							
00C5	Rsvd							
00C6	Rsvd							

Input Monitor Control Register Block Field Descriptions			
Bit Field Name	**Field Type**	**Default Value**	**Description**
LOS_m[16:0]	R/W	1FFFFh	Number of Input Monitoring clock periods before Input Reference m is considered to be missed (soft alarm). Minimum setting is 3.
Rsvd	R/W	-	Reserved. Always write 0 to this bit location. Read values are not defined.

Table 6R. Interrupt Enable Control Register Bit Field Locations and Descriptions

Interrupt Enable Control Register Block Field Locations								
Address (Hex)	**D7**	**D6**	**D5**	**D4**	**D3**	**D2**	**D1**	**D0**
00C7	LOL1_EN	LOL0_EN	HOLD1_EN	HOLD0_EN	Rsvd	Rsvd	LOS1_EN	LOS0_EN
00C8	Rsvd							

Interrupt Enable Control Register Block Field Descriptions			
Bit Field Name	**Field Type**	**Default Value**	**Description**
LOLm_EN	R/W	0b	Interrupt Enable Control for Loss-of-Lock Interrupt Status Bit for PLLm: 0 = LOLm_INT register bit will not affect status of nINT output signal 1 = LOLm_INT register bit will affect status of nINT output signal
HOLDm_EN	R/W	0b	Interrupt Enable Control for Holdover Interrupt Status Bit for PLLm: 0 = HOLDm_INT register bit will not affect status of nINT output signal 1 = HOLDm_INT register bit will affect status of nINT output signal
LOSm_EN	R/W	0b	Interrupt Enable Control for Loss-of-Signal Interrupt Status Bit for Input Reference m: 0 = LOSm_INT register bit will not affect status of nINT output signal 1 = LOSm_INT register bit will affect status of nINT output signal
Rsvd	R/W	-	Reserved. Always write 0 to this bit location. Read values are not defined.

Table 6S. Interrupt Status Register Bit Field Locations and Descriptions

This register contains “sticky” bits for tracking the status of the various alarms. Whenever an alarm occurs, the appropriate Interrupt Status bit will be set. The Interrupt Status bit will remain asserted even after the original alarm goes away. The Interrupt Status bits remain asserted until explicitly cleared by a write of a ‘1’ to the bit over the serial port. This type of functionality is referred to as Read / Write-1-to-Clear (R/W1C).

Interrupt Status Register Block Field Locations								
Address (Hex)	**D7**	**D6**	**D5**	**D4**	**D3**	**D2**	**D1**	**D0**
0200	LOL1_INT	LOL0_INT	HOLD1_INT	HOLD0_INT	Rsvd	Rsvd	LOS1_INT	LOS0_INT
0201	Rsvd							
0202	Rsvd							
0203	Rsvd							

Interrupt Status Register Block Field Descriptions			
Bit Field Name	**Field Type**	**Default Value**	**Description**
LOLm_INT	R/W1C	0b	Interrupt Status Bit for Loss-of-Lock on PLLm: 0 = No Loss-of-Lock alarm flag on PLLm has occurred since the last time this register bit was cleared 1 = At least one Loss-of-Lock alarm flag on PLLm has occurred since the last time this register bit was cleared
HOLDm_INT	R/W1C	0b	Interrupt Status Bit for Holdover on PLLm: 0 = No Holdover alarm flag on PLLm has occurred since the last time this register bit was cleared 1 = At least one Holdover alarm flag on PLLm has occurred since the last time this register bit was cleared
LOSm_INT	R/W1C	0b	Interrupt Status Bit for Loss-of-Signal on Input Reference m: 0 = No Loss-of-Signal alarm flag on Input Reference m has occurred since the last time this register bit was cleared 1 = At least one Loss-of-Signal alarm flag on Input Reference m has occurred since the last time this register bit was cleared
Rsvd	R/W	-	Reserved. Always write 0 to this bit location. Read values are not defined.

Table 6T. Output Phase Adjustment Status Register Bit Field Locations and Descriptions

Output Phase Adjustment Status Register Block Field Locations								
Address (Hex)	**D7**	**D6**	**D5**	**D4**	**D3**	**D2**	**D1**	**D0**
0204	PA_BUSY7	PA_BUSY6	PA_BUSY5	PA_BUSY4	PA_BUSY3	PA_BUSY2	PA_BUSY1	PA_BUSY0

Output Phase Adjustment Status Register Block Field Descriptions			
Bit Field Name	**Field Type**	**Default Value**	**Description**
PA_BUSYm	R/O	-	Phase Adjustment Event Status for output Qm, nQm: 0 = No phase adjustment is currently in progress on output Qm, nQm 1 = Phase adjustment still in progress on output Qm, nQm. Do not initiate any new phase adjustment at this time

Table 6U. Digital PLL0 Status Register Bit Field Locations and Descriptions

Digital PLL0 Status Register Block Field Locations								
Address (Hex)	**D7**	**D6**	**D5**	**D4**	**D3**	**D2**	**D1**	**D0**
0205	Rsvd			EXTLOS0	Rsvd	CURR_REF0[2:0]		
0206	Rsvd			Rsvd	Rsvd	Rsvd	Rsvd	
0207	Rsvd							Rsvd
0208	Rsvd							
0209	Rsvd							
020A	Rsvd							Rsvd
020B	Rsvd							
020C	Rsvd							
020D	Rsvd							
020E	Rsvd							

Digital PLL0 Status Register Block Field Descriptions			
Bit Field Name	**Field Type**	**Default Value**	**Description**
CURR_REF0[2:0]	R/O	-	Currently Selected Reference Status for Digital PLL0: 000 - 011 = No reference currently selected 100 = Input Reference 0 (CLK0, nCLK0) selected 101 = Input Reference 1 (CLK1, nCLK1) selected 110 = Reserved 111 = Reserved
EXTLOS0	R/O	-	External Loopback signal lost for PLL0: 0 = PLL0 has a valid feedback reference signal 1 = PLL0 has lost the external feedback reference signal and is no longer locked
Rsvd	R/W	-	Reserved. Always write 0 to this bit location. Read values are not defined.

Table 6V. Digital PLL1 Status Register Bit Field Locations and Descriptions

Digital PLL1 Status Register Block Field Locations								
Address (Hex)	**D7**	**D6**	**D5**	**D4**	**D3**	**D2**	**D1**	**D0**
020F	Rsvd			EXTLOS1	Rsvd	CURR_REF1[2:0]		
0210	Rsvd			Rsvd	Rsvd	Rsvd	Rsvd	
0211	Rsvd							Rsvd
0212	Rsvd							
0213	Rsvd							
0214	Rsvd							Rsvd
0215	Rsvd							
0216	Rsvd							
0217	Rsvd							
0218	Rsvd							

Digital PLL1 Status Register Block Field Descriptions			
Bit Field Name	**Field Type**	**Default Value**	**Description**
CURR_REF1[2:0]	R/O	-	Currently Selected Reference Status for Digital PLL1: 000 - 011 = No reference currently selected 100 = Input Reference 0 (CLK0, nCLK0) selected 101 = Input Reference 1 (CLK1, nCLK1) selected 110 = Reserved 111 = Reserved
EXTLOS1	R/O	-	External Loopback signal lost for PLL1: 0 = PLL1 has a valid feedback reference signal 1 = PLL1 has lost the external feedback reference signal and is no longer locked
Rsvd	R/W	-	Reserved. Always write 0 to this bit location. Read values are not defined.

Table 6W. General Purpose Input Status Register Bit Field Locations and Descriptions

Global Interrupt Status Register Block Field Locations								
Address (Hex)	**D7**	**D6**	**D5**	**D4**	**D3**	**D2**	**D1**	**D0**
0219	Rsvd				GPI[3]	GPI[2]	GPI[1]	GPI[0]

General Purpose Input Status Register Block Field Descriptions			
Bit Field Name	**Field Type**	**Default Value**	**Description**
GPI[3:0]	R/O	-	Shows current values on GPIO[3:0] pins that are configured as General-Purpose Inputs.

Table 6X. Global Interrupt Status Register Bit Field Locations and Descriptions

Global Interrupt Status Register Block Field Locations								
Address (Hex)	**D7**	**D6**	**D5**	**D4**	**D3**	**D2**	**D1**	**D0**
021A	Rsvd				Rsvd			INT
021B	Rsvd							
021C	Rsvd			Rsvd				
021D	Rsvd			Rsvd				
021E	Rsvd					Rsvd	Rsvd	BOOTFAIL
021F	Rsvd	Rsvd	Rsvd	Rsvd	nEEP_CRC	Rsvd	Rsvd	EEPDONE

Global Interrupt Status Register Block Field Descriptions			
Bit Field Name	**Field Type**	**Default Value**	**Description**
INT	R/O	-	Device Interrupt Status: 0 = No Interrupt Status bits that are enabled are asserted (nINT pin released) 1 = At least one Interrupt Status bit that is enabled is asserted (nINT pin asserted low)
BOOTFAIL	R/O	-	Reading of Serial EEPROM failed. Once set this bit is only cleared by reset.
nEEP_CRC	R/O	-	EEPROM CRC Error (Active Low): 0 = EEPROM was detected and read, but CRC check failed - please reset the device via the nRST pin to retry (serial port is locked) 1 = No EEPROM CRC Error
EEPDONE	R/O	-	Serial EEPROM Read cycle has completed. Once set this bit is only cleared by reset.
Rsvd	R/W	-	Reserved. Always write 0 to this bit location. Read values are not defined.

© 2019 Renesas Electronics Corporation

Absolute Maximum Ratings

NOTE: Stresses beyond those listed under *Absolute Maximum Ratings* may cause permanent damage to the device. These ratings are stress specifications only. Functional operation of product at these conditions or any conditions beyond those listed in the *DC Characteristics or AC Characteristics* is not implied. Exposure to absolute maximum rating conditions for extended periods may affect product reliability.

Item	Rating
Supply Voltage, V_{CC}	3.63V
Inputs, V_I OSCI Other Input	 0V to 2V -0.5V to V_{CC} + 0.5V
Outputs, V_O (Q[0:7], nQ[0:7])	-0.5V to V_{CCOX} + 0.5V
Outputs, V_O (GPIO[0:3], SDATA, SCLK, nINT)	-0.5V to V_{CC} + 0.5V
Outputs, I_O (Q[0:7], nQ[0:7]) Continuous Current Surge Current	 40mA 65mA
Outputs, I_O (GPIO[0:3], SDATA, SCLK, nINT)) Continuous Current Surge Current	 8mA 13mA
Junction Temperature, T_J	125°C
Storage Temperature, T_{STG}	-65°C to 150°C

NOTE: V_{CCOx} denotes V_{CCO0}, V_{CCO1}, V_{CCO2}, V_{CCO3}, V_{CCO4}, V_{CCO5}, V_{CCO6}, V_{CCO7}.

Supply Voltage Characteristics

Table 7A. Power Supply Characteristics, V_{CC} = 3.3V ±5%, V_{EE} = 0V, T_A = -40°C to 85°C

Symbol	Parameter	Test Conditions	Minimum	Typical	Maximum	Units
V_{CC}	Core Supply Voltage		3.135	3.3	3.465	V
V_{CCA}	Analog Supply Voltage		V_{CC} – 0.13	3.3	V_{CC}	V
I_{CC}	Core Supply Current; NOTE[1]			82	100	mA
I_{CCA}	Analog Supply Current; NOTE[1]	PLL0 and PLL1 Enabled		207	265	mA
		Analog PLL1, Digital PLL1, and Calibration Logic for analog PLL1 Disabled		121	187	mA
I_{EE}	Power Supply Current; NOTE[2]	Q[0:7] Configured for LVPECL Logic Levels. Outputs Unloaded		575	735	mA

NOTE 1: I_{CC} and I_{CCA} are included in I_{EE} when Q[0:7] configured for LVPECL logic levels.
NOTE 2: Internal dynamic switching current at maximum f_{OUT} is included.

Table 7B. Power Supply Characteristics, V_{CC} = 2.5V ±5%, V_{EE} = 0V, T_A = -40°C to 85°C

Symbol	Parameter	Test Conditions	Minimum	Typical	Maximum	Units
V_{CC}	Core Supply Voltage		2.375	2.5	2.625	V
V_{CCA}	Analog Supply Voltage		V_{CC} – 0.13	2.5	V_{CC}	V
I_{CC}	Core Supply Current; NOTE[1]			79	95	mA
I_{CCA}	Analog Supply Current; NOTE[1]	PLL0 and PLL1 Enabled		201	260	mA
		Analog PLL1, Digital PLL1, and Calibration Logic for Analog PLL1 Disabled		116	182	mA
I_{EE}	Power Supply Current; NOTE[2]	Q[0:7] Configured for LVPECL Logic Levels. Outputs Unloaded		544	695	mA

NOTE 1: I_{CC} and I_{CCA} are included in I_{EE} when Q[0:7] configured for LVPECL logic levels.
NOTE 2: Internal dynamic switching current at maximum f_{OUT} is included.

Table 7C. Maximum Output Supply Current, V_{CC} = 3.3V ±5% or 2.5V ±5%, V_{EE} = 0V, T_A = -40°C to 85°C

			V_{CCOx} = 3.3V ±5%			V_{CCOx} = 2.5V ±5%			V_{CCOx} = 1.8V ±5%	
Symbol	Parameter	Test Conditions	LVPECL	LVDS	LVCMOS	LVPECL	LVDS	LVCMOS	LVCMOS	Units
I_{CCO0}	Q0, nQ0 Output Supply Current	Outputs Unloaded	50	60	55	40	50	45	35	mA
I_{CCO1}	Q1, nQ1 Output Supply Current	Outputs Unloaded	50	60	55	40	50	45	35	mA
I_{CCO2}	Q2, nQ2 Output Supply Current	Outputs Unloaded	80	90	80	70	80	70	60	mA
I_{CCO3}	Q3, nQ3 Output Supply Current	Outputs Unloaded	80	90	80	70	80	70	60	mA
I_{CCO4}	Q4, nQ4 Output Supply Current	Outputs Unloaded	55	65	55	45	55	45	40	mA
I_{CCO5}	Q5, nQ5 Output Supply Current	Outputs Unloaded	55	65	55	45	55	45	40	mA
I_{CCO6}	Q6, nQ6 Output Supply Current	Outputs Unloaded	55	65	55	45	55	45	40	mA
I_{CCO7}	Q7, nQ7 Output Supply Current	Outputs Unloaded	55	65	55	45	55	45	40	mA

NOTE: V_{CCOx} denotes V_{CCO0}, V_{CCO1}, V_{CCO2}, V_{CCO3}, V_{CCO4}, V_{CCO5}, V_{CCO6}, V_{CCO7}.
NOTE: Internal dynamic switching current at maximum f_{OUT} is included.

© 2019 Renesas Electronics Corporation

DC Electrical Characteristics

Table 8A. LVCMOS/LVTTL DC Characteristics, V_{EE} = 0V, T_A = -40°C to 85°C

Symbol	Parameter		Test Conditions	Minimum	Typical	Maximum	Units
V_{IH}	Input High Voltage		V_{CC} = 3.3V	2		V_{CC} +0.3	V
			V_{CC} = 2.5V	1.7		V_{CC} +0.3	V
V_{IL}	Input Low Voltage		V_{CC} = 3.3V	-0.3		0.8	V
			V_{CC} = 2.5V	-0.3		0.7	V
I_{IH}	Input High Current	PLL_BYP, S_A0	V_{CC} = V_{IN} = 3.465V or 2.625V			150	µA
		nRST, SDATA, SCLK	V_{CC} = V_{IN} = 3.465V or 2.625V			5	µA
		GPIO[3:0]	V_{CC} = V_{IN} = 3.465V or 2.625V			1	mA
I_{IL}	Input Low Current	PLL_BYP, S_A0	V_{CC} = 3.465V or 2.625V, V_{IN} = 0V	-5			µA
		nRST, SDATA, SCLK	V_{CC} = 3.465V or 2.625V, V_{IN} = 0V	-150			µA
		GPIO[3:0]	V_{CC} = 3.465V or 2.625V, V_{IN} = 0V	-1			mA
V_{OH}	Output High Voltage	nINT, SDATA, SCLK; NOTE1	V_{CC} = 3.3V ±5%, I_{OH} = -5µA	2.6			V
		GPIO[3:0]	V_{CC} = 3.3V ±5%, I_{OH} = -50µA	2.6			V
		nINT, SDATA, SCLK; NOTE1	V_{CC} = 2.5V ±5%, I_{OH} = -5µA	1.8			V
		GPIO[3:0]	V_{CC} = 2.5V ±5%, I_{OH} = -50µA	1.8			V
V_{OL}	Output Low Voltage	nINT, SDATA, SCLK; NOTE1	V_{CC} = 3.3V ±5% or 2.5V±5%, I_{OL} = 5mA			0.5	V
		GPIO[3:0]	V_{CC} = 3.3V ±5% or 2.5V±5%, I_{OL} = 5mA			0.5	V

NOTE 1: Use of external pull-up resistors is recommended.

Table 8B. Differential Input DC Characteristics, V_{CC} = 3.3V ±5% or 2.5V ±5%, V_{EE} = 0V, T_A = -40°C to 85°C

Symbol	Parameter		Test Conditions	Minimum	Typical	Maximum	Units
I_{IH}	Input High Current	CLKx, nCLKx	V_{CC} = V_{IN} = 3.465V or 2.625V			150	µA
I_{IL}	Input Low Current	CLKx	V_{CC} = 3.465V or 2.625V, V_{IN} = 0V	-5			µA
		nCLKx	V_{CC} = 3.465V or 2.625V, V_{IN} = 0V	-150			µA
V_{PP}	Peak-to-Peak Voltage; NOTE1			0.15		1.3	V
V_{CMR}	Common Mode Input Voltage; NOTE1, 2			V_{EE}		V_{CC} -1.2	V

NOTE: CLKx denotes CLK0, CLK1. nCLKx denotes nCLK0, nCLK1.
NOTE 1: V_{IL} should not be less than -0.3V. V_{IH} should not be higher than V_{CC}.
NOTE 2: Common mode voltage is defined as the cross-point.

© 2019 Renesas Electronics Corporation

Table 8C. LVPECL DC Characteristics, V_{CC} = 3.3V ±5% or 2.5V ±5%, V_{EE} = 0V, T_A = -40°C to 85°C

Symbol	Parameter		Test Conditions	V_{CCOx} = 3.3V±5%			V_{CCOx} = 2.5V±5%			Units
				Minimum	Typical	Maximum	Minimum	Typical	Maximum	
V_{OH}	Output High Voltage; NOTE[1]	Qx, nQx		V_{CCOx} - 1.3		V_{CCOx} - 0.8	V_{CCOx} - 1.35		V_{CCOx} - 0.9	V
V_{OL}	Output Low Voltage; NOTE[1]	Qx, nQx		V_{CCOx} - 1.95		V_{CCOx} - 1.75	V_{CCOx} - 1.95		V_{CCOx} - 1.75	V
V_{SWING}	Peak-to-Peak Output Voltage Swing	Qx, nQx			0.8			0.75		V

NOTE: V_{CCOx} denotes V_{CCO0}, V_{CCO1}, V_{CCO2}, V_{CCO3}, V_{CCO4}, V_{CCO5}, V_{CCO6}, V_{CCO7}.
NOTE: Qx denotes Q0, Q1, Q2, Q3, Q4, Q5, Q6, Q7. nQx denotes nQ0, nQ1, nQ2, nQ3, nQ4, nQ5, nQ6, nQ7.
NOTE 1: Outputs terminated with 50Ω to V_{CCOx} – 2V.

Table 8D. LVDS DC Characteristics, V_{CC} = 3.3V ±5% or 2.5V ±5%, V_{CCOx} = 3.3V ±5% or 2.5V ±5%, V_{EE} = 0V, T_A = -40°C to 85°C

Symbol	Parameter		Test Conditions	Minimum	Typical	Maximum	Units
V_{OD}	Differential Output Voltage	Qx, nQx		195		454	mV
ΔV_{OD}	V_{OD} Magnitude Change	Qx, nQx				50	mV
V_{OS}	Offset Voltage	Qx, nQx		1.1		1.375	V
ΔV_{OS}	V_{OS} Magnitude Change	Qx, nQx				50	mV

NOTE: V_{CCOx} denotes V_{CCO0}, V_{CCO1}, V_{CCO2}, V_{CCO3}, V_{CCO4}, V_{CCO5}, V_{CCO6}, V_{CCO7}.
NOTE: Qx denotes Q0, Q1, Q2, Q3, Q4, Q5, Q6, Q7. nQx denotes nQ0, nQ1, nQ2, nQ3, nQ4, nQ5, nQ6, nQ7.
NOTE: Terminated 100Ω across Qx and nQx.

Table 8E. LVCMOS DC Characteristics, V_{CC} = 3.3V ±5% or 2.5V ±5%, V_{EE} = 0V, T_A = -40°C to 85°C

Symbol	Parameter		Test Conditions	V_{CCOx} = 3.3V±5%			V_{CCOx} = 2.5V±5%			V_{CCOx} = 1.8V ±5%			Units
				Minimum	Typical	Maximum	Minimum	Typical	Maximum	Minimum	Typical	Maximum	
V_{OH}	Output High Voltage	Qx, nQx	I_{OH} = -8mA	2.6			1.8			1.1			V
V_{OL}	Output Low Voltage	Qx, nQx	I_{OL} = 8mA			0.5			0.5			0.5	V

NOTE: V_{CCOx} denotes V_{CCO0}, V_{CCO1}, V_{CCO2}, V_{CCO3}, V_{CCO4}, V_{CCO5}, V_{CCO6}, V_{CCO7}.
NOTE: Qx denotes Q0, Q1, Q2, Q3, Q4, Q5, Q6, Q7. nQx denotes nQ0, nQ1, nQ2, nQ3, nQ4, nQ5, nQ6, nQ7.

© 2019 Renesas Electronics Corporation

Table 9. Input Frequency Characteristics, V_{CC} = 3.3V±5% or 2.5V±5%, T_A = -40°C to 85°C

Symbol	Parameter		Test Conditions	Minimum	Typical	Maximum	Units
f_{IN}	Input Frequency; NOTE[1]	OSCI, OSCO		10		40	MHz
		CLKx, nCLKx		0.008		875	MHz
f_{SCLK}	Serial Port Clock SCLK (slave mode)	I^2C Operation		100		400	kHz

NOTE 1: For the input reference frequency, the divider values must be set for the VCO to operate within its supported range.
NOTE: CLKx denotes CLK0, CLK1. nCLKx denotes nCLK0, nCLK1.

Crystal Characteristics

Parameter	Test Conditions	Minimum	Typical	Maximum	Units
Mode of Oscillation			Fundamental		
Frequency		10		40	MHz
Equivalent Series Resistance (ESR)			15		Ω
Load Capacitance (C_L)			12		pF
Frequency Stability (total)		-100		100	ppm

AC Electrical Characteristics

Table 10. AC Characteristics, V_{CC} = 3.3V ±5% or 2.5V ±5%, V_{CCOx} = 3.3V ±5%, 2.5V ±5% or 1.8V ±5% (1.8V only supported for LVCMOS outputs), T_A = -40°C to 85°C

Symbol	Parameter			Test Conditions	Minimum	Typical	Maximum	Units
f_{VCO}	VCO Operating Frequency				3000		4000	MHz
f_{OUT}	Output Frequency	LVPECL, LVDS		Q0, Q1, Q4, Q5, Q6, Q7 Outputs	0.008		1000	MHz
				Q2, Q3 outputs Integer Divide Ratio & no added Phase Delay	0.008		666.67	MHz
				Q2, Q3 Outputs Non-integer Divide and/or added Phase Delay	0.008		400	MHz
		LVCMOS			0.008		250	MHz
t_R / t_F	Output Rise and Fall Times	LVPECL		20% to 80%	145	340	600	ps
		LVDS		20% to 80%	100	250	500	ps
		LVCMOS		20% to 80%, V_{CCOx} = 3.3V	180	350	600	ps
				20% to 80%, V_{CCOx} = 2.5V	200	350	550	ps
				20% to 80%, V_{CCOx} = 1.8V	200	410	650	ps
SR	Output Slew Rate	LVPECL		Measured on Differential Waveform, ±150mV from Center	1		5	V/ns
		LVDS		Measured on Differential Waveform, ±150mV from Center	0.5		4	V/ns
*t*sk(b)	Bank Skew	LVPECL	Q0, nQ0, Q1, nQ1	NOTE[1, 2, 3, 5]			75	ps
			Q4, nQ4, Q5, nQ5	NOTE[1, 2, 3, 5]			75	ps
			Q6, nQ6, Q7, nQ7	NOTE[1, 2, 3, 5]			75	ps
		LVDS	Q0, nQ0, Q1, nQ1	NOTE[1, 2, 3, 5]			75	ps
			Q4, nQ4, Q5, nQ5	NOTE[1, 2, 3, 5]			75	ps
			Q6, nQ6, Q7,nQ7	NOTE[1, 2, 3, 5]			75	ps
		LVCMOS	Q0, nQ0, Q1, nQ1	NOTE[1, 2, 4, 5, 6]			80	ps
			Q4, nQ4, Q5, nQ5	NOTE[1, 2, 4, 5, 6]			115	ps
			Q6, nQ6, Q7, nQ7	NOTE[1, 2, 4, 5, 6]			115	ps
odc	Output Duty Cycle; NOTE[7]	LVPECL		$f_{OUT} \leq$ 666.667MHz	45	50	55	%
				f_{OUT} > 666.667MHz	40	50	60	%
		LVDS		$f_{OUT} \leq$ 666.667MHz	45	50	55	%
				f_{OUT} > 666.667MHz	40	50	60	%
		LVCMOS			40	50	60	%

© 2019 Renesas Electronics Corporation

Symbol	Parameter		Test Conditions	Minimum	Typical	Maximum	Units
	Initial Frequency Offset		Switchover or Entering / Leaving Holdover State; NOTE[8, 13]	-50		50	ppb
	Output Phase Change in Fully Hitless Switching		Switchover or Entering / Leaving Holdover State; NOTE[10, 13]		5		ns
Φ_{SSB}(1k)	Single Sideband Phase Noise; NOTE[9]	1kHz	122.88MHz Output		-119		dBc/Hz
Φ_{SSB}(10k)		10kHz	122.88MHz Output		-127		dBc/Hz
Φ_{SSB}(100k)		100kHz	122.88MHz Output		-135		dBc/Hz
Φ_{SSB}(1M)		1MHz	122.88MHz Output		-147		dBc/Hz
Φ_{SSB}(10M)		10MHz	122.88MHz Output		-153		dBc/Hz
Φ_{SSB}(30M)		≥30MHz	122.88MHz Output		-154		dBc/Hz
	Spurious Limit at Offset	≥800kHz	122.88MHz Output; NOTE[11]		-83		dBc
$t_{startup}$	Startup Time	Internal OTP Startup; NOTE[13]	from V_{CC} >80% to First Output clock edge		110	150	ms
		External EEPROM Startup; NOTE[12, 13]	from V_{CC} >80% to First Output Clock Edge (0 retries). I^2C Frequency = 100kHz		150	200	ms
			from V_{CC} >80% to First Output Clock Edge (0 retries). I^2C Frequency = 400kHz		130	150	ms
			from V_{CC} >80% to First Output Clock Edge (31 retries). I^2C Frequency = 100kHz		925	1200	ms
			from V_{CC} >80% to First Output Clock Edge (31 retries). I^2C Frequency = 400kHz		360	500	ms

NOTE: V_{CCOx} denotes V_{CCO0}, V_{CCO1}, V_{CCO2}, V_{CCO3}, V_{CCO4}, V_{CCO5}, V_{CCO6}, V_{CCO7}.
NOTE: Electrical parameters are guaranteed over the specified ambient operating temperature range, which is established when the device is mounted in a test socket with maintained transverse airflow greater than 500 lfpm. The device will meet specifications after thermal equilibrium has been reached under these conditions.
NOTE 1: This parameter is guaranteed by characterization. Not tested in production.
NOTE 2: This parameter is defined in accordance with JEDEC Standard 65.
NOTE 3: Measured at the output differential cross points.
NOTE 4: Measured at V_{CCOx}/2 of the rising edge. All Qx and nQx outputs phase-aligned.
NOTE 5: Defined as skew within a bank of outputs at the same supply voltage and with equal load conditions running off the same clock source.
NOTE 6: Appropriate SE_MODE bit must be set to enable phase-aligned operation.
NOTE 7: Characterized in synthesizer mode. Duty cycle of bypassed signals (input reference clocks or crystal input) is not adjusted by the device.
NOTE 8: Tested in fast-lock operation after >20 minutes of locked operation to ensure holdover averaging logic is stable.
NOTE 9: Characterized with 8T49N283B-901 units (synthesizer mode).
NOTE 10: Device programmed with SWMODEn = 0 (absorbs phase differences).
NOTE 11: Tested with all outputs operating at 122.88MHz.
NOTE 12: Assuming a clear I^2C bus.
NOTE 13: This parameter is guaranteed by design.

© 2019 Renesas Electronics Corporation

Table 11A. Typical RMS Phase Jitter (Synthesizer Mode), V_{CC} = 3.3V ±5% or 2.5V ±5%, V_{CCOx} = 3.3V ±5%, 2.5V ±5% or 1.8V ±5% (1.8V only supported for LVCMOS outputs), T_A = -40°C to 85°C

Symbol	Parameter		Test Conditions	LVPECL	LVDS	LVCMOS NOTE 6	Units
tjit(ϕ)	RMS Phase Jitter (Random)	Q0, Q1	f_{OUT} = 122.88MHz, Integration Range: 12kHz - 20MHz; NOTE 1	275	291	281	fs
			f_{OUT} = 156.25MHz, Integration Range: 12kHz - 20MHz; NOTE 2	269	274	284	fs
			f_{OUT} = 622.08MHz, Integration Range: 12kHz - 20MHz; NOTE 3	270	239	N/A (NOTE 5)	fs
		Q2, Q3 Integer; NOTE 1	f_{OUT} = 122.88MHz, Integration Range: 12kHz - 20MHz	294	304	305	fs
		Q2, Q3 Fractional; NOTE 4	f_{OUT} = 122.88MHz, Integration Range: 12kHz - 20MHz	259	271	261	fs
		Q4, Q5, Q6, Q7; NOTE 1	f_{OUT} = 122.88MHz, Integration Range: 12kHz - 20MHz	287	299	290	fs

NOTE: V_{CCOx} denotes V_{CCO0}, V_{CCO1}, V_{CCO2}, V_{CCO3}, V_{CCO4}, V_{CCO5}, V_{CCO6}, V_{CCO7}.
NOTE: Fox part numbers: 277LF-40-18 and 277LF-38.88-2 used for 40MHz and 38.88MHz crystals, respectively.
NOTE: All outputs configured for the specific output type, as shown in the table.
NOTE 1: Characterized with 8T49N283B-901.
NOTE 2: Characterized with 8T49N283B-902.
NOTE 3: Characterized with 8T49N283B-903.
NOTE 4: Characterized with 8T49N283B-900.
NOTE 5: This frequency is not supported for LVCMOS operation.
NOTE 6: Qx and nQx are 180° out of phase.

Table 11B. Typical RMS Phase Jitter (Jitter Attenuator Mode), V_{CC} = 3.3V ±5% or 2.5V ±5%, V_{CCOx} = 3.3V ±5%, 2.5V ±5% or 1.8V ±5% (1.8V only supported for LVCMOS outputs), T_A = -40°C to 85°C

Symbol	Parameter		Test Conditions	LVPECL	LVDS	LVCMOS NOTE 6	Units
tjit(ϕ)	RMS Phase Jitter (Random)	Q0, Q1	f_{OUT} = 122.88MHz, Integration Range: 12kHz - 20MHz; NOTE 1	271	292	280	fs
			f_{OUT} = 156.25MHz, Integration Range: 12kHz - 20MHz; NOTE 2	241	249	284	fs
			f_{OUT} = 622.08MHz, Integration Range: 12kHz - 20MHz; NOTE 3	212	189	N/A (NOTE 5)	fs
		Q2, Q3 Integer; NOTE 1	f_{OUT} = 122.88MHz, Integration Range: 12kHz - 20MHz	293	304	304	fs
		Q2, Q3 Fractional; NOTE 4	f_{OUT} = 122.88MHz, Integration Range: 12kHz - 20MHz	260	272	263	fs
		Q4, Q5, Q6, Q7; NOTE 1	f_{OUT} = 122.88MHz, Integration Range: 12kHz - 20MHz	285	299	289	fs

NOTE: V_{CCOx} denotes V_{CCO0}, V_{CCO1}, V_{CCO2}, V_{CCO3}, V_{CCO4}, V_{CCO5}, V_{CCO6}, V_{CCO7}.
NOTE: Fox part numbers: 277LF-40-18 and 277LF-38.88-2 used for 40MHz and 38.88MHz crystals, respectively.
NOTE: All outputs configured for the specific output type, as shown in the table.
NOTE: Measured using a Rohde & Schwarz SMA100A as the input source.
NOTE 1: Characterized with 8T49N283B-905.
NOTE 2: Characterized with 8T49N283B-906.
NOTE 3: Characterized with 8T49N283B-907.
NOTE 4: Characterized with 8T49N283B-904.
NOTE 5: This frequency is not supported for LVCMOS operation.
NOTE 6: Qx and nQx are 180° out of phase.

Table 12A. PCI Express Jitter Specifications, V_{CC} = V_{CCOx} = 3.3V ±5%, T_A = -40°C to 85°C

Symbol	Parameter	Test Conditions	Minimum	Typical	Maximum	PCIe Industry Specification	Units
tj (PCIe Gen 1)	Phase Jitter Peak-to-Peak; NOTE[1, 4, 5]	f = 100MHz, 40MHz Crystal Input, Evaluation Band: 0Hz - Nyquist (clock frequency/2)		8	30	86	ps
$t_{REFCLK_HF_RMS}$ (PCIe Gen 2)	Phase Jitter RMS; NOTE[2, 4, 5]	f = 100MHz, 40MHz Crystal Input, High Band: 1.5MHz - Nyquist (clock frequency/2)		0.5	2	3.10	ps
$t_{REFCLK_LF_RMS}$ (PCIe Gen 2)	Phase Jitter RMS; NOTE[2, 4, 5]	f = 100MHz, 40MHz Crystal Input, Low Band: 10kHz - 1.5MHz		0.04	0.2	3.0	ps
t_{REFCLK_RMS} (PCIe Gen 3)	Phase Jitter RMS; NOTE[3, 4, 5]	f = 100MHz, 40MHz Crystal Input, Evaluation Band: 0Hz - Nyquist (clock frequency/2)		0.1	0.4	0.8	ps

NOTE: V_{CCOx} denotes V_{CCO0}, V_{CCO1}, V_{CCO2}, V_{CCO3}, V_{CCO4}, V_{CCO5}, V_{CCO6}, V_{CCO7}.
NOTE: Electrical parameters are guaranteed over the specified ambient operating temperature range, which is established when the device is mounted in a test socket with maintained transverse airflow greater than 500 lfpm. The device will meet specifications after thermal equilibrium has been reached under these conditions.
NOTE 1: Peak-to-Peak jitter after applying system transfer function for the Common Clock Architecture. Maximum limit for PCI Express Gen 1
NOTE 2: RMS jitter after applying the two evaluation bands to the two transfer functions defined in the Common Clock Architecture and reporting the worst case results for each evaluation band. Maximum limit for PCI Express Generation 2 is 3.1ps RMS for $t_{REFCLK_HF_RMS}$ (High Band) and 3.0ps RMS for $t_{REFCLK_LF_RMS}$ RMS (Low Band).
NOTE 3: RMS jitter after applying system transfer function for the Common Clock Architecture. This specification is based on the PCI Express Base Specification Revision 0.7, October 2009 and is subject to change pending the final release version of the specification.
NOTE 4: This parameter is guaranteed by characterization. Not tested in production.
NOTE 5: Outputs configured for LVPECL mode. Fox 277LF-40-18 crystal used with doubler logic enabled.

Table 12B. PCI Express Jitter Specifications, V_{CC} = V_{CCOx} = 2.5V ±5%, T_A = -40°C to 85°C

Symbol	Parameter	Test Conditions	Minimum	Typical	Maximum	PCIe Industry Specification	Units
tj (PCIe Gen 1)	Phase Jitter Peak-to-Peak; NOTE[1, 4, 5]	f = 100MHz, 40MHz Crystal Input, Evaluation Band: 0Hz - Nyquist (clock frequency/2)		12	65	86	ps
$t_{REFCLK_HF_RMS}$ (PCIe Gen 2)	Phase Jitter RMS; NOTE[2, 4, 5]	f = 100MHz, 40MHz Crystal Input, High Band: 1.5MHz - Nyquist (clock frequency/2)		0.8	3.10	3.10	ps
$t_{REFCLK_LF_RMS}$ (PCIe Gen 2)	Phase Jitter RMS; NOTE[2, 4, 5]	f = 100MHz, 40MHz Crystal Input, Low Band: 10kHz - 1.5MHz		0.05	0.4	3.0	ps
t_{REFCLK_RMS} (PCIe Gen 3)	Phase Jitter RMS; NOTE[3, 4, 5]	f = 100MHz, 40MHz Crystal Input, Evaluation Band: 0Hz - Nyquist (clock frequency/2)		0.2	0.8	0.8	ps

NOTE: V_{CCOx} denotes V_{CCO0}, V_{CCO1}, V_{CCO2}, V_{CCO3}, V_{CCO4}, V_{CCO5}, V_{CCO6}, V_{CCO7}.
NOTE: Electrical parameters are guaranteed over the specified ambient operating temperature range, which is established when the device is mounted in a test socket with maintained transverse airflow greater than 500 lfpm. The device will meet specifications after thermal equilibrium has been reached under these conditions.
NOTE 1: Peak-to-Peak jitter after applying system transfer function for the Common Clock Architecture. Maximum limit for PCI Express Gen 1
NOTE 2: RMS jitter after applying the two evaluation bands to the two transfer functions defined in the Common Clock Architecture and reporting the worst case results for each evaluation band. Maximum limit for PCI Express Generation 2 is 3.1ps RMS for $t_{REFCLK_HF_RMS}$ (High Band) and 3.0ps RMS for $t_{REFCLK_LF_RMS}$ RMS (Low Band).
NOTE 3: RMS jitter after applying system transfer function for the Common Clock Architecture. This specification is based on the PCI Express Base Specification Revision 0.7, October 2009 and is subject to change pending the final release version of the specification.
NOTE 4: This parameter is guaranteed by characterization. Not tested in production.
NOTE 5: Outputs configured for LVPECL mode. Fox 277LF-40-18 crystal used with doubler logic enabled.

© 2019 Renesas Electronics Corporation

Typical Phase Noise at 156.25MHz

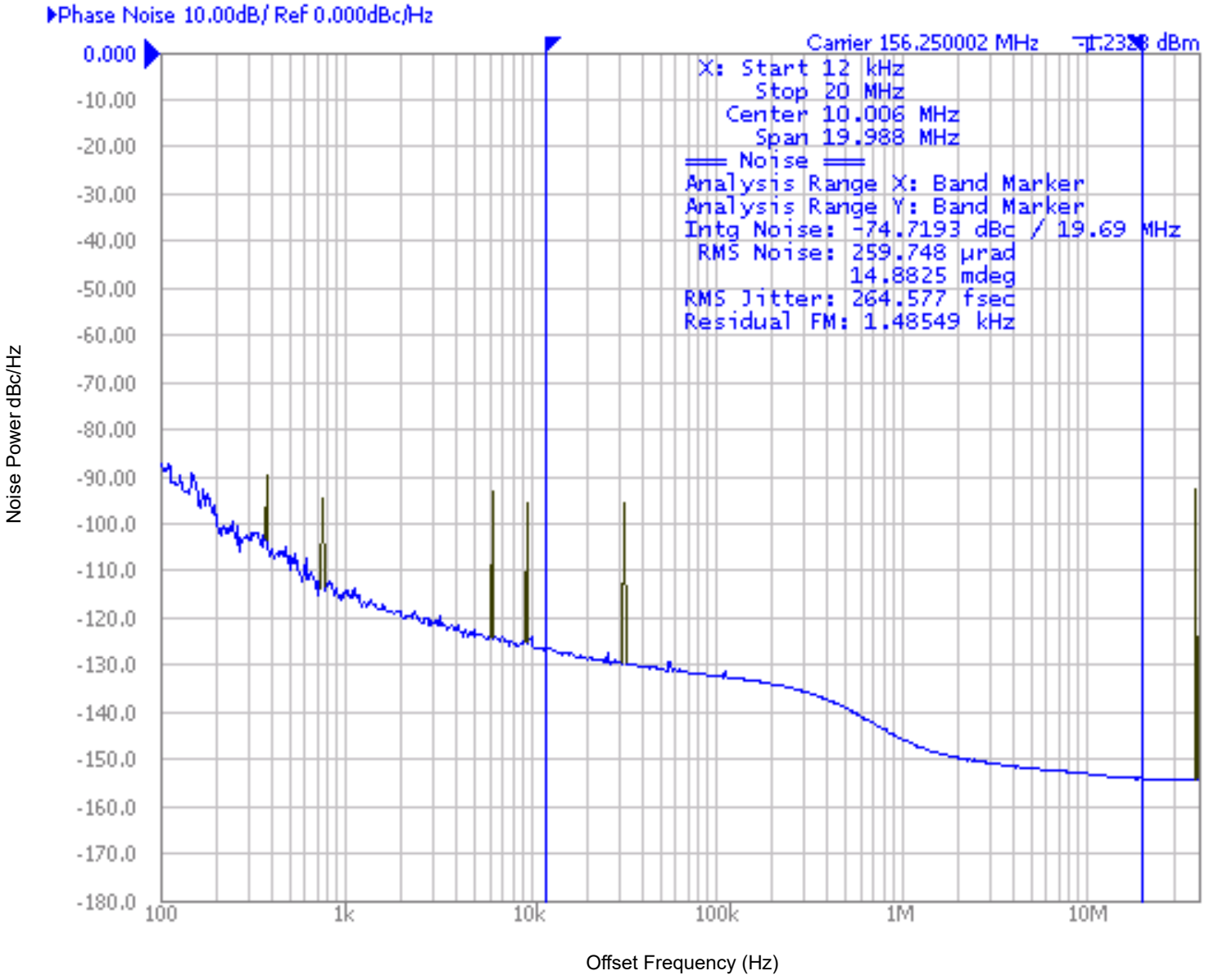

Applications Information

Overdriving the XTAL Interface

The OSCI input can be overdriven by an LVCMOS driver or by one side of a differential driver through an AC coupling capacitor. The OSCO pin can be left floating. The amplitude of the input signal should be between 500mV and 1.8V and the slew rate should not be less than 0.2V/ns. For 3.3V LVCMOS inputs, the amplitude must be reduced from full swing to at least half the swing in order to prevent signal interference with the power rail and to reduce internal noise. *Figure 5A* shows an example of the interface diagram for a high speed 3.3V LVCMOS driver. This configuration requires that the sum of the output impedance of the driver (Ro) and the series resistance (Rs) equals the transmission line impedance. In addition, matched termination at the crystal input will attenuate the signal in half. This can be done in one of two ways. First, R1 and R2 in parallel should equal the transmission line impedance. For most 50Ω applications, R1 and R2 can be 100Ω. This can also be accomplished by removing R1 and changing R2 to 50Ω. The values of the resistors can be increased to reduce the loading for a slower and weaker LVCMOS driver. *Figure 5B* shows an example of the interface diagram for an LVPECL driver. This is a standard LVPECL termination with one side of the driver feeding the OSCI input. It is recommended that all components in the schematics be placed in the layout. Suggest edge rate faster than 1V/ns.Though some components might not be used, they can be utilized for debugging purposes. The datasheet specifications are characterized and guaranteed by using a quartz crystal as the input.

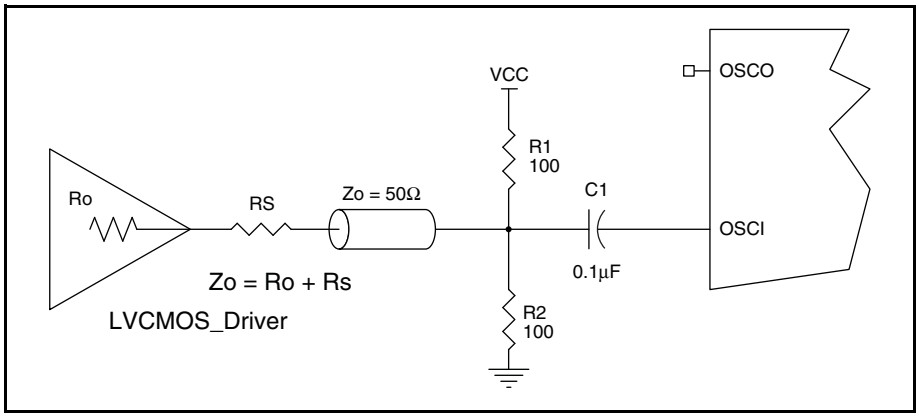

Figure 5A. General Diagram for LVCMOS Driver to XTAL Input Interface

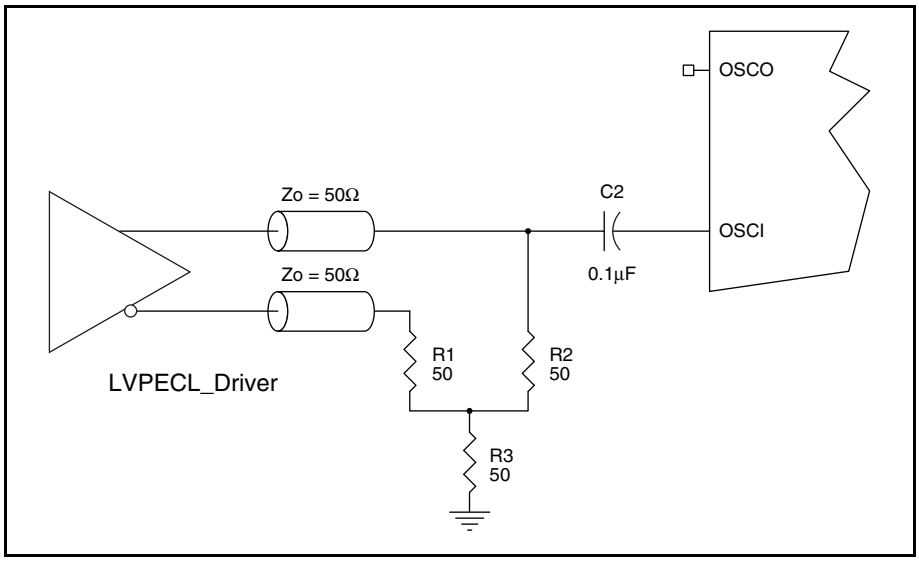

Figure 5B. General Diagram for LVPECL Driver to XTAL Input Interface

Wiring the Differential Input to Accept Single-Ended Levels

Figure 6 shows how a differential input can be wired to accept single ended levels. The reference voltage $V_{REF} = V_{CC}/2$ is generated by the bias resistors R1 and R2. The bypass capacitor (C1) is used to help filter noise on the DC bias. This bias circuit should be located as close to the input pin as possible. The ratio of R1 and R2 might need to be adjusted to position the V_{REF} in the center of the input voltage swing. For example, if the input clock swing is 2.5V and V_{CC} = 3.3V, R1 and R2 value should be adjusted to set V_{REF} at 1.25V. The values below are for when both the single ended swing and V_{CC} are at the same voltage. This configuration requires that the sum of the output impedance of the driver (Ro) and the series resistance (Rs) equals the transmission line impedance. In addition, matched termination at the input will attenuate the signal in half. This can be done in one of two ways. First, R3 and R4 in parallel should equal the transmission line impedance. For most 50Ω applications, R3 and R4 can be 100Ω.

The values of the resistors can be increased to reduce the loading for slower and weaker LVCMOS driver. When using single-ended signaling, the noise rejection benefits of differential signaling are reduced. Even though the differential input can handle full rail LVCMOS signaling, it is recommended that the amplitude be reduced. The datasheet specifies a lower differential amplitude, however this only applies to differential signals. For single-ended applications, the swing can be larger, however V_{IL} cannot be less than -0.3V and V_{IH} cannot be more than V_{CC} + 0.3V. Suggest edge rate faster than 1V/ns. Though some of the recommended components might not be used, the pads should be placed in the layout. They can be utilized for debugging purposes. The datasheet specifications are characterized and guaranteed by using a differential signal.

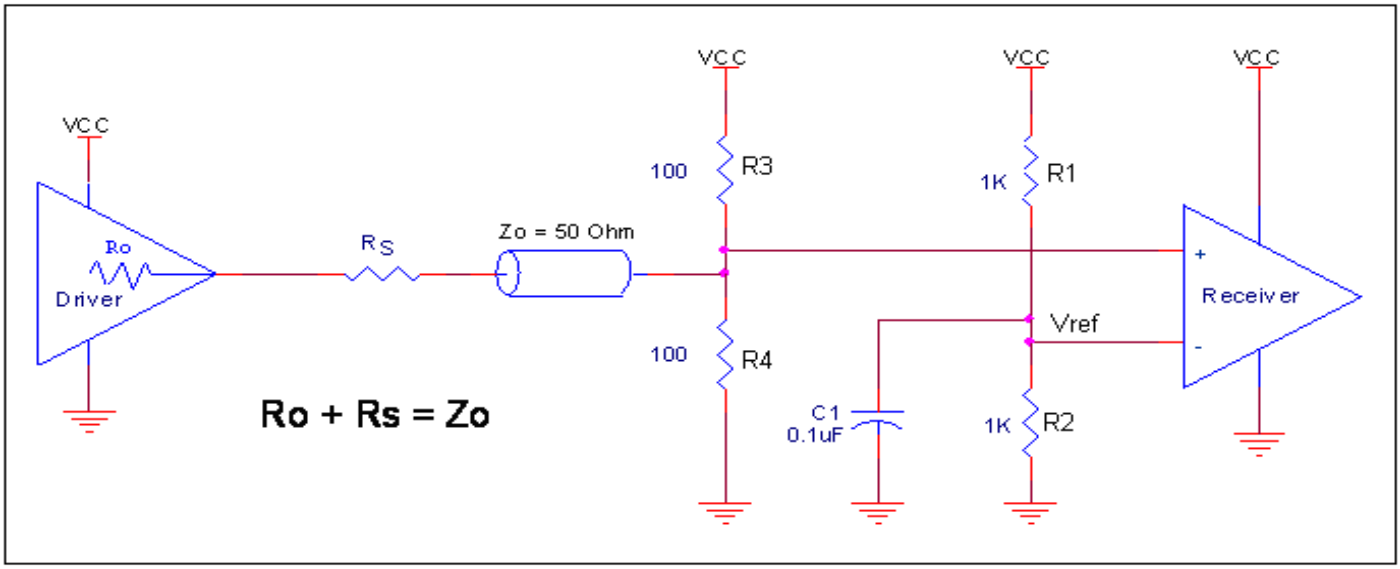

Figure 6. Recommended Schematic for Wiring a Differential Input to Accept Single-ended Levels

3.3V Differential Clock Input Interface

CLKx/nCLKx accepts LVDS, LVPECL, LVHSTL, HCSL and other differential signals. Both V_{SWING} and V_{OH} must meet the V_{PP} and V_{CMR} input requirements. *Figure 7A to Figure 7E* show interface examples for the CLKx/nCLKx input driven by the most common driver types. The input interfaces suggested here are examples only.

Please consult with the vendor of the driver component to confirm the driver termination requirements. For example, in Figure 7A, the input termination applies for IDT open emitter LVHSTL drivers. If you are using an LVHSTL driver from another vendor, use their termination recommendation.

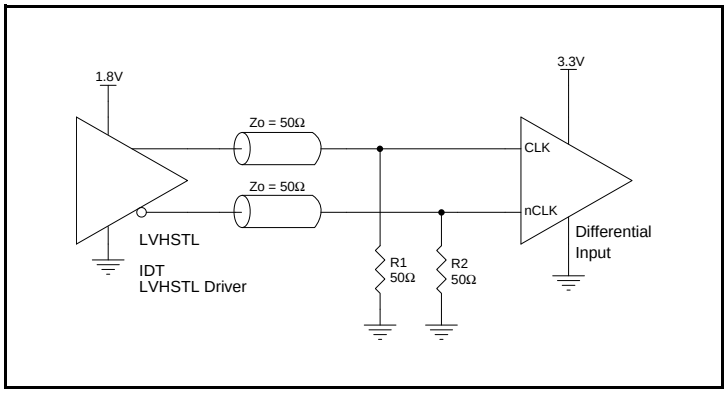

Figure 7A. CLKx/nCLKx Input Driven by an IDT Open Emitter LVHSTL Driver

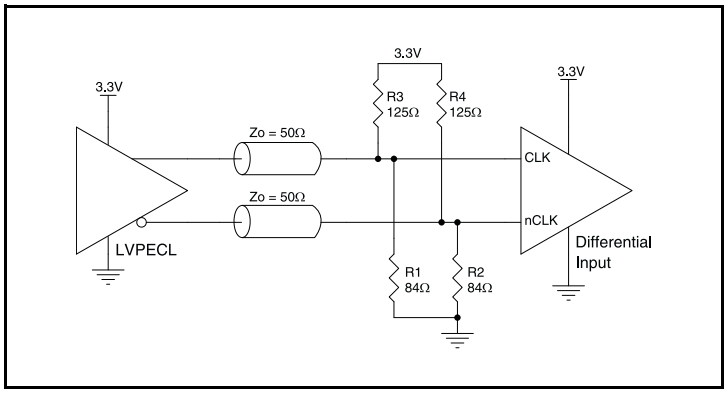

Figure 7B. CLKx/nCLKx Input Driven by a 3.3V LVPECL Driver

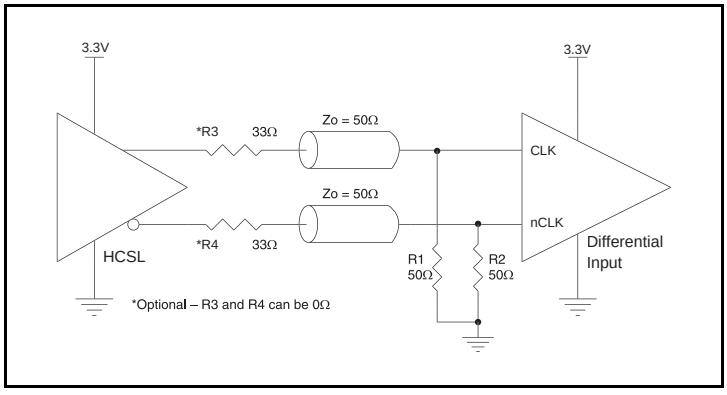

Figure 7C. CLKx/nCLKx Input Driven by a 3.3V HCSL Driver

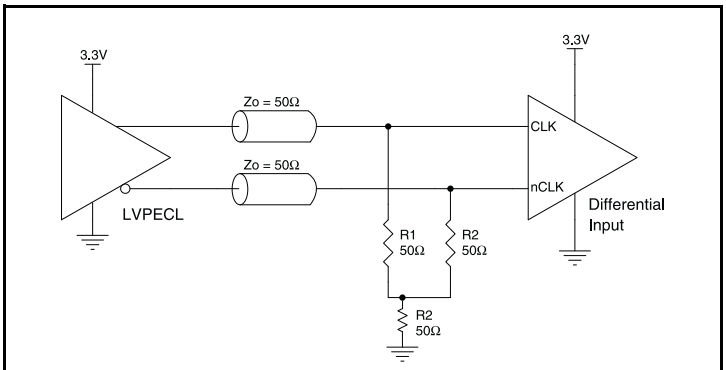

Figure 7D. CLKx/nCLKx Input Driven by a 3.3V LVPECL Driver

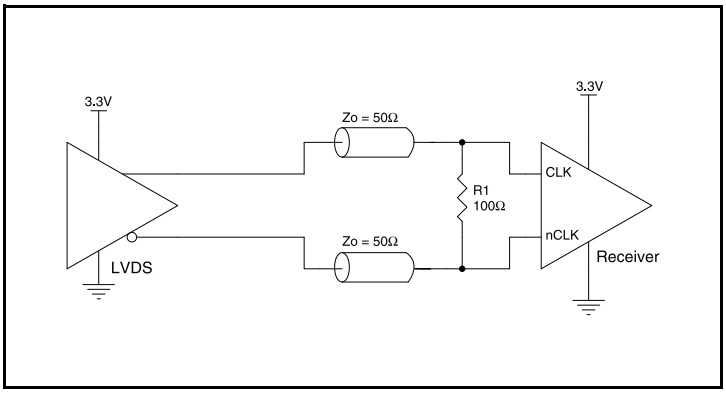

Figure 7E. CLKx/nCLKx Input Driven by a 3.3V LVDS Driver

2.5V Differential Clock Input Interface

CLKx/nCLKx accepts LVDS, LVPECL, LVHSTL and other differential signals. Both V_{SWING} and V_{OH} must meet the V_{PP} and V_{CMR} input requirements. *Figure 8A to Figure 8D* show interface examples for the CLKx/nCLKx input driven by the most common driver types. The input interfaces suggested here are examples only. Please consult with the vendor of the driver component to confirm the driver termination requirements. For example, in Figure 8A, the input termination applies for IDT open emitter LVHSTL drivers. If you are using an LVHSTL driver from another vendor, use their termination recommendation.

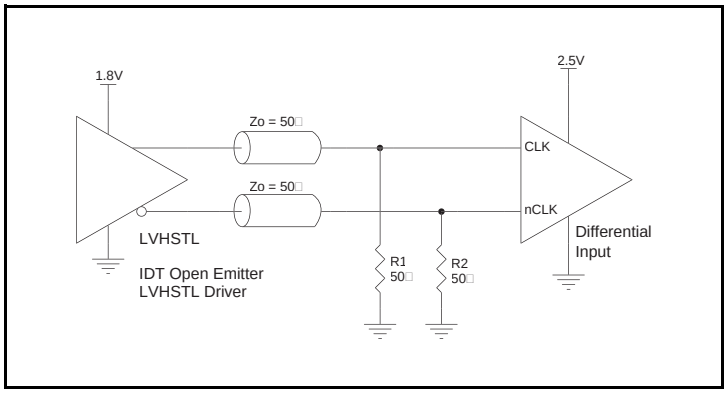

Figure 8A. CLKx/nCLKx Input Driven by an IDT Open Emitter LVHSTL Driver

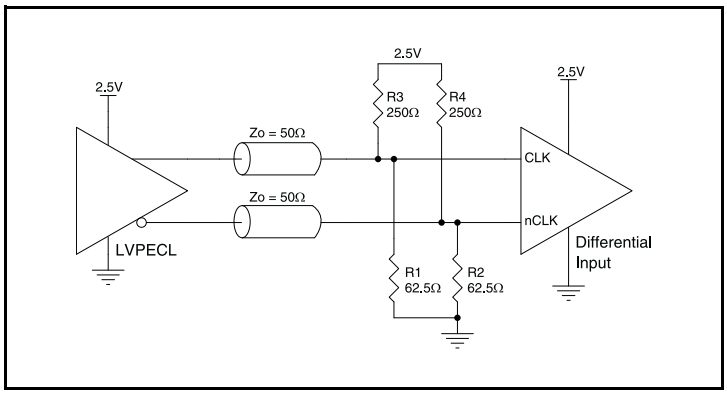

Figure 8C. CLKx/nCLKx Input Driven by a 2.5V LVPECL Driver

Figure 8B. CLKx/nCLKx Input Driven by a 2.5V LVPECL Driver

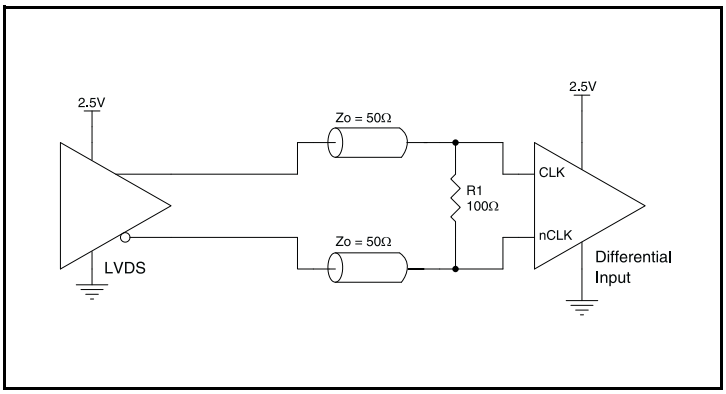

Figure 8D. CLKx/nCLKx Input Driven by a 2.5V LVDS Driver

Recommendations for Unused Input and Output Pins

Inputs:

CLKx/nCLKx Input

For applications not requiring the use one or more reference clock inputs, both CLKx and nCLKx can be left floating. Though not required, but for additional protection, a 1kΩ resistor can be tied from CLKx to ground. It is recommended that CLKx, nCLKx not be driven with active signals when not enabled for use.

LVCMOS Control Pins

All control pins have internal pullups or pulldowns; additional resistance is not required but can be added for additional protection. A 1kΩ resistor can be used.

Outputs:

LVPECL Outputs

Any unused LVPECL output pairs can be left floating. We recommend that there is no trace attached. Both sides of the differential output pair should either be left floating or terminated.

LVDS Outputs

Any unused LVDS output pairs can be either left floating or terminated with 100Ω across. If they are left floating there should be no trace attached.

LVCMOS Outputs

Any LVCMOS output can be left floating if unused. There should be no trace attached.

Termination for 3.3V LVPECL Outputs

The clock layout topology shown below is a typical termination for LVPECL outputs. The two different layouts mentioned are recommended only as guidelines.

The differential outputs generate ECL/LVPECL compatible outputs. Therefore, terminating resistors (DC current path to ground) or current sources must be used for functionality. These outputs are designed to drive 50Ω transmission lines. Matched impedance techniques should be used to maximize operating frequency and minimize signal distortion. *Figure 9A and Figure 9B* show two different layouts which are recommended only as guidelines. Other suitable clock layouts may exist and it would be recommended that the board designers simulate to guarantee compatibility across all printed circuit and clock component process variations.

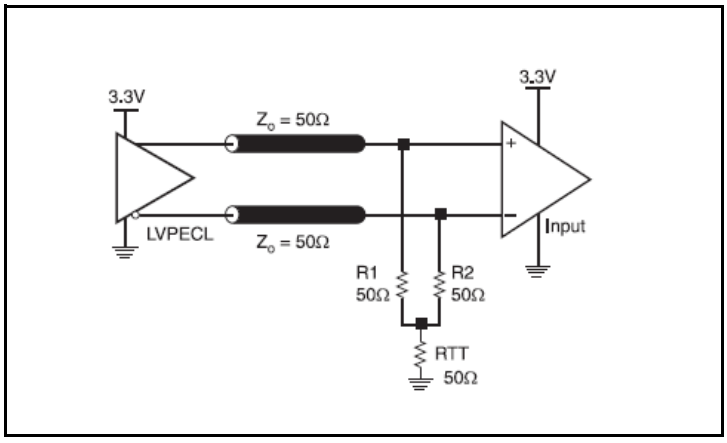

Figure 9A. 3.3V LVPECL Output Termination

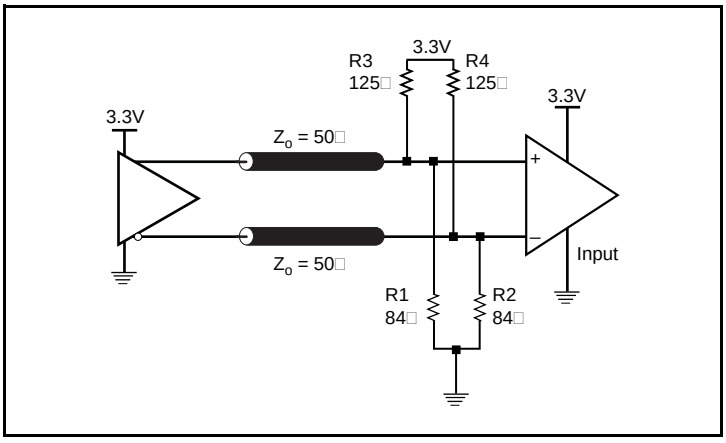

Figure 9B. 3.3V LVPECL Output Termination

Termination for 2.5V LVPECL Outputs

Figure 10A and *Figure 10C* show examples of termination for 2.5V LVPECL driver. These terminations are equivalent to terminating 50Ω to V_{CCO} – 2V. For V_{CCO} = 2.5V, the V_{CCO} – 2V is very close to ground level. The R3 in *Figure 10C* can be eliminated and the termination is shown in *Figure 10B*.

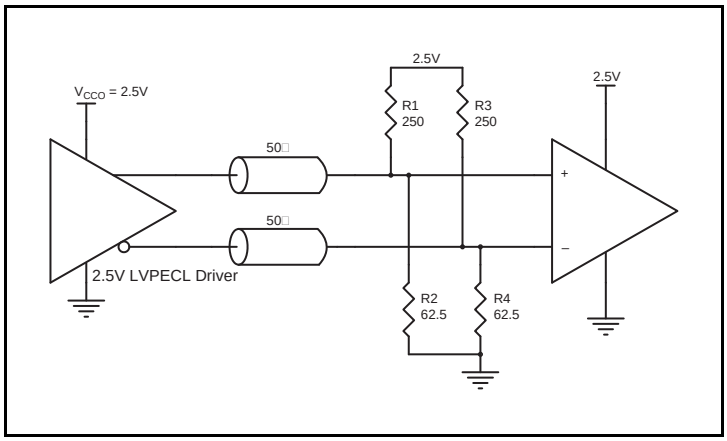

Figure 10A. 2.5V LVPECL Driver Termination Example

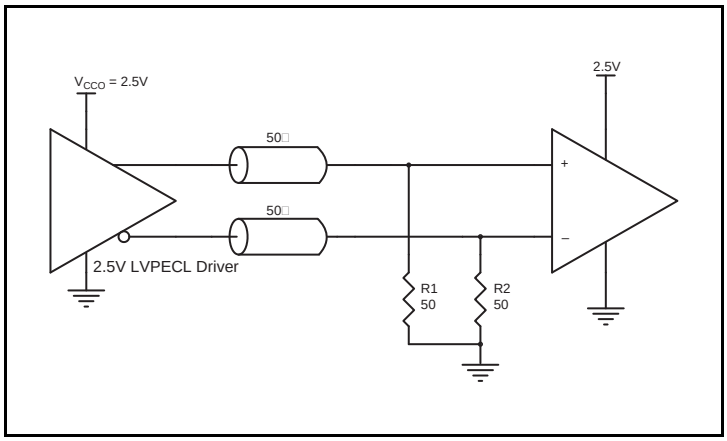

Figure 10B. 2.5V LVPECL Driver Termination Example

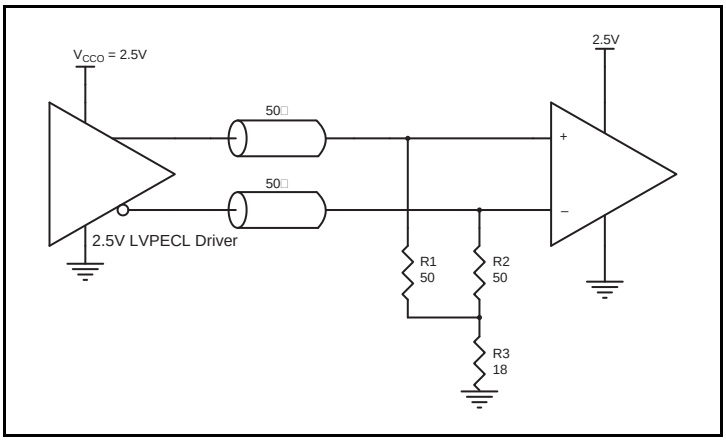

Figure 10C. 2.5V LVPECL Driver Termination Example

LVDS Driver Termination

For a general LVDS interface, the recommended value for the termination impedance (Z_T) is between 90Ω and 132Ω. The actual value should be selected to match the differential impedance (Z_0) of your transmission line. A typical point-to-point LVDS design uses a 100Ω parallel resistor at the receiver and a 100Ω differential transmission-line environment. In order to avoid any transmission-line reflection issues, the components should be surface mounted and must be placed as close to the receiver as possible. IDT offers a full line of LVDS compliant devices with two types of output structures: current source and voltage source. The standard termination schematic as shown in *Figure 11A* can be used with either type of output structure. *Figure 11B*, which can also be used with both output types, is an optional termination with center tap capacitance to help filter common mode noise. The capacitor value should be approximately 50pF. If using a non-standard termination, it is recommended to contact IDT and confirm if the output structure is current source or voltage source type. In addition, since these outputs are LVDS compatible, the input receiver's amplitude and common-mode input range should be verified for compatibility with the output.

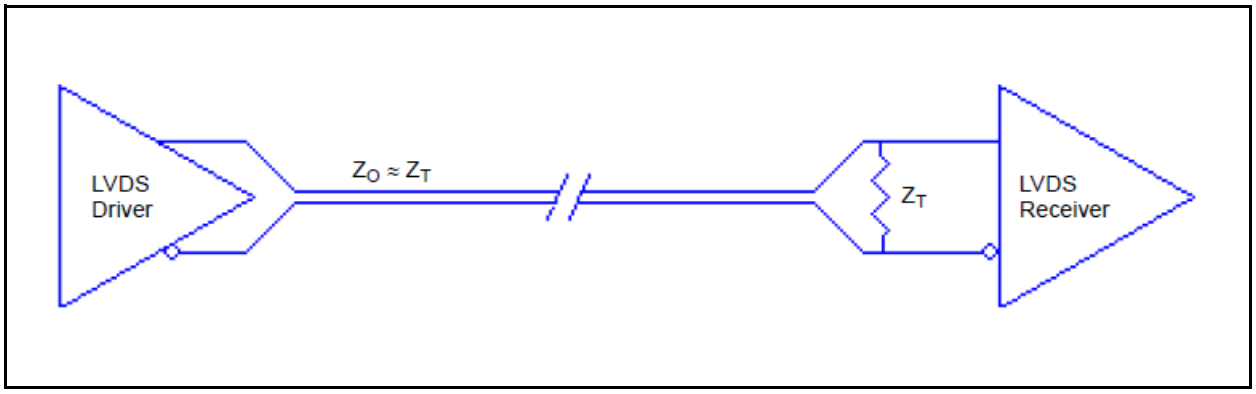

Figure 11A. Standard LVDS Termination

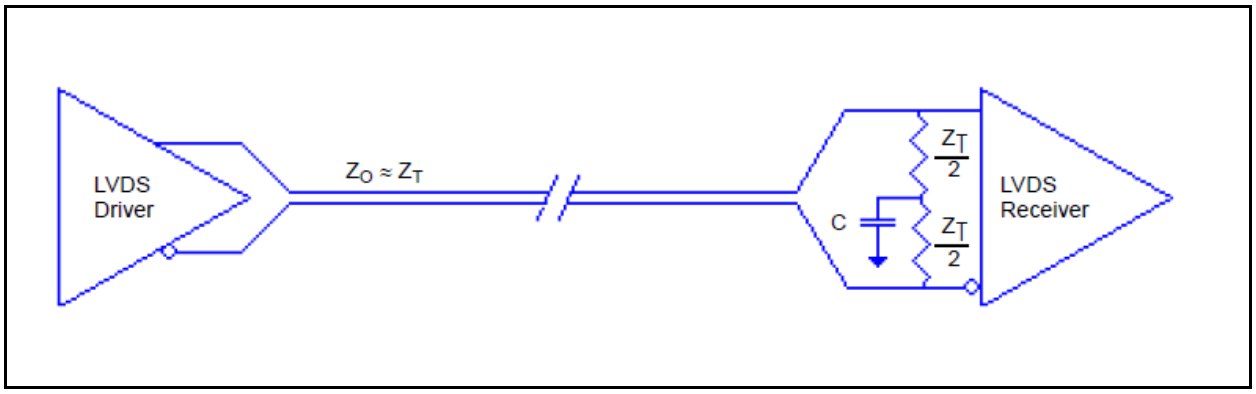

Figure 11B. Optional LVDS Termination

VFQFN EPAD Thermal Release Path

In order to maximize both the removal of heat from the package and the electrical performance, a land pattern must be incorporated on the Printed Circuit Board (PCB) within the footprint of the package corresponding to the exposed metal pad or exposed heat slug on the package, as shown in *Figure 12*. The solderable area on the PCB, as defined by the solder mask, should be at least the same size/shape as the exposed pad/slug area on the package to maximize the thermal/electrical performance. Sufficient clearance should be designed on the PCB between the outer edges of the land pattern and the inner edges of pad pattern for the leads to avoid any shorts.

While the land pattern on the PCB provides a means of heat transfer and electrical grounding from the package to the board through a solder joint, thermal vias are necessary to effectively conduct from the surface of the PCB to the ground plane(s). The land pattern must be connected to ground through these vias. The vias act as “heat pipes”. The number of vias (i.e. “heat pipes”) are application specific and dependent upon the package power dissipation as well as electrical conductivity requirements. Thus, thermal and electrical analysis and/or testing are recommended to determine the minimum number needed. Maximum thermal and electrical performance is achieved when an array of vias is incorporated in the land pattern. It is recommended to use as many vias connected to ground as possible. It is also recommended that the via diameter should be 12 to 13mils (0.30 to 0.33mm) with 1oz copper via barrel plating. This is desirable to avoid any solder wicking inside the via during the soldering process which may result in voids in solder between the exposed pad/slug and the thermal land. Precautions should be taken to eliminate any solder voids between the exposed heat slug and the land pattern. Note: These recommendations are to be used as a guideline only. For further information, please refer to the Application Note on the Surface Mount Assembly of Amkor’s Thermally/ Electrically Enhance Lead frame Base Package, Amkor Technology.

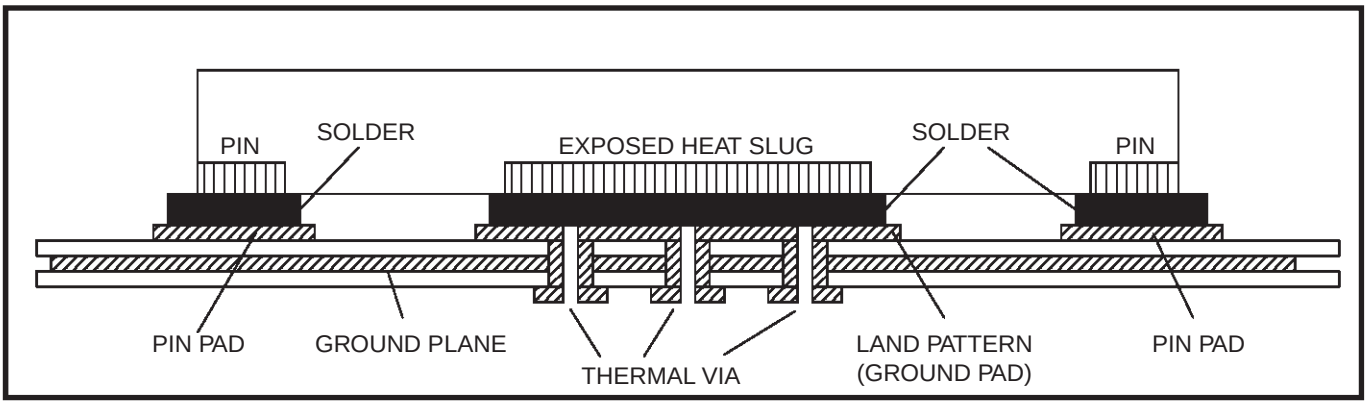

Figure 12. P.C. Assembly for Exposed Pad Thermal Release Path – Side View (drawing not to scale)

Schematic and Layout Information

Schematics for 8T49N283 can be found on IDT.com. Please search for the 8T49N283 device and click on the link for evaluation board schematics.

Crystal Recommendation

This device was validated using FOX 277LF series through-hole crystals including part #277LF-40-18 (40MHz) and #277LF-38.88-2 (38.88MHz). If a surface mount crystal is desired, we recommended FOX Part #603-40-48 (40MHz) or #603-38.88-7 (38.88MHz).

I^2C Serial EEPROM Recommendation

The 8T49N283 was designed to operate with most standard I^2C serial EEPROMs of 256 bytes or larger. Atmel AT24C04C was used during device characterization and is recommended for use. Please contact IDT for review of any other I^2C EEPROM’s compatibility with the 8T49N283.

© 2019 Renesas Electronics Corporation

PCI Express Application Note

PCI Express jitter analysis methodology models the system response to reference clock jitter. The block diagram below shows the most frequently used *Common Clock Architecture* in which a copy of the reference clock is provided to both ends of the PCI Express Link.

In the jitter analysis, the transmit (Tx) and receive (Rx) serdes PLLs are modeled as well as the phase interpolator in the receiver. These transfer functions are called H1, H2, and H3 respectively. The overall system transfer function at the receiver is:

$$Ht(s) = H3(s) \times [H1(s) - H2(s)]$$

The jitter spectrum seen by the receiver is the result of applying this system transfer function to the clock spectrum X(s) and is:

$$Y(s) = X(s) \times H3(s) \times [H1(s) - H2(s)]$$

In order to generate time domain jitter numbers, an inverse Fourier Transform is performed on X(s)*H3(s) * [H1(s) - H2(s)].

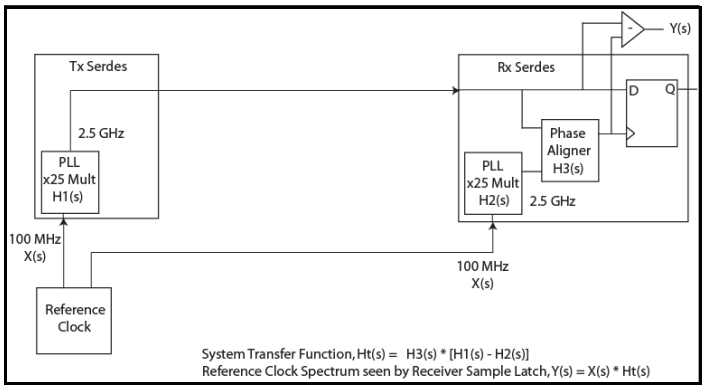

PCI Express Common Clock Architecture

For **PCI Express Gen 1**, one transfer function is defined and the evaluation is performed over the entire spectrum: DC to Nyquist (e.g for a 100MHz reference clock: 0Hz – 50MHz) and the jitter result is reported in peak-peak.

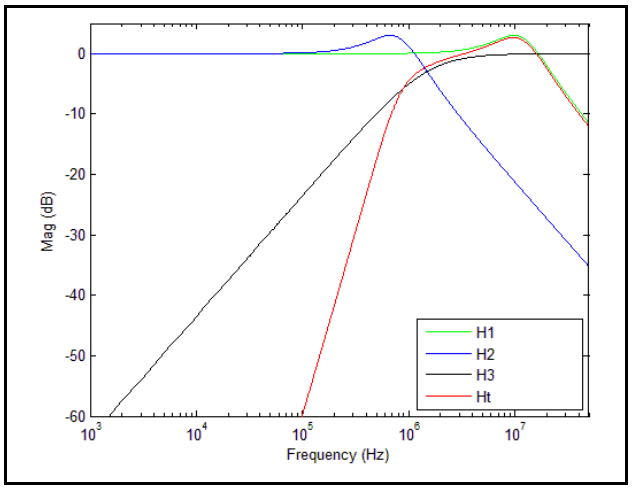

PCIe Gen 1 Magnitude of Transfer Function

For **PCI Express Gen 2**, two transfer functions are defined with 2 evaluation ranges and the final jitter number is reported in RMS. The two evaluation ranges for PCI Express Gen 2 are 10kHz – 1.5MHz (Low Band) and 1.5MHz – Nyquist (High Band). The plots show the individual transfer functions as well as the overall transfer function Ht.

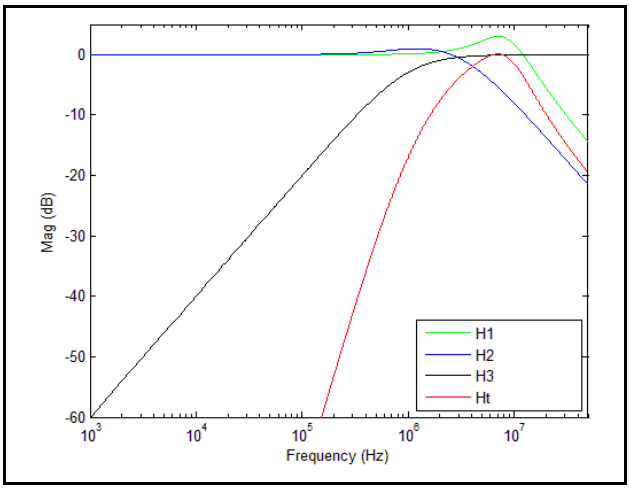

PCIe Gen 2A Magnitude of Transfer Function

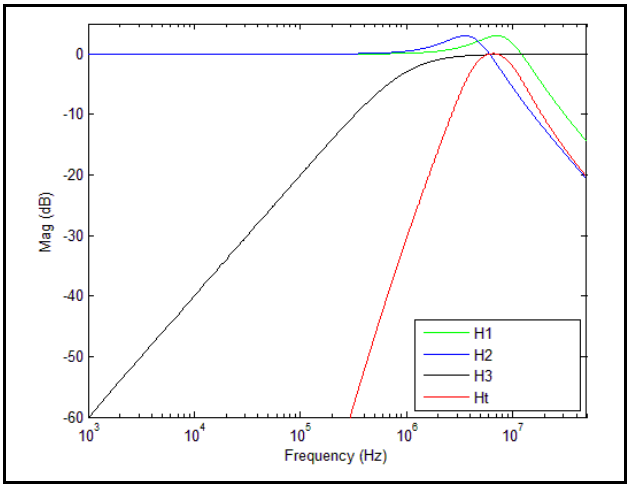

PCIe Gen 2B Magnitude of Transfer Function

For **PCI Express Gen 3**, one transfer function is defined and the evaluation is performed over the entire spectrum. The transfer function parameters are different from Gen 1 and the jitter result is reported in RMS.

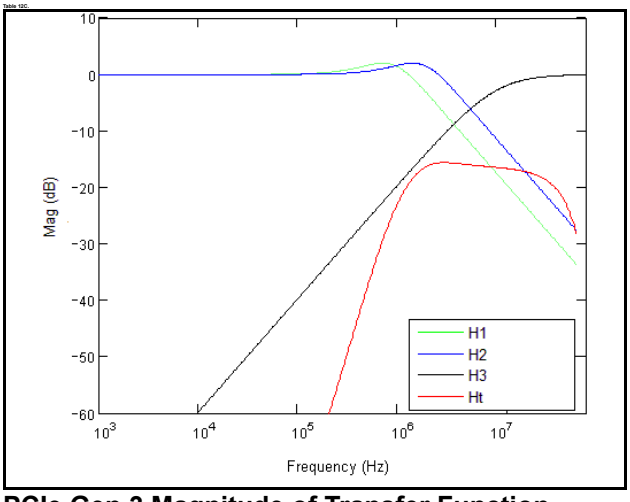

PCIe Gen 3 Magnitude of Transfer Function

For a more thorough overview of PCI Express jitter analysis methodology, please refer to IDT Application Note *PCI Express Reference Clock Requirements.*

© 2019 Renesas Electronics Corporation

Power Dissipation and Thermal Considerations

The 8T49N283 is a multi-functional, high speed device that targets a wide variety of clock frequencies and applications. Since this device is highly programmable with a broad range of features and functionality, the power consumption will vary as each of these features and functions is enabled.

The 8T49N283 device was designed and characterized to operate within the ambient industrial temperature range of -40°C to +85°C. The ambient temperature represents the temperature around the device, not the junction temperature. When using the device in extreme cases, such as maximum operating frequency and high ambient temperature, external air flow may be required in order to ensure a safe and reliable junction temperature. Extreme care must be taken to avoid exceeding 125°C junction temperature.

The power calculation examples below were generated using a maximum ambient temperature and supply voltage. For many applications, the power consumption will be much lower. Please contact IDT technical support for any concerns on calculating the power dissipation for your own specific configuration.

Power Domains

The 8T49N283 device has a number of separate power domains that can be independently enabled and disabled via register accesses (all power supply pins must still be connected to a valid supply voltage). Figure 13 below indicates the individual domains and the associated power pins.

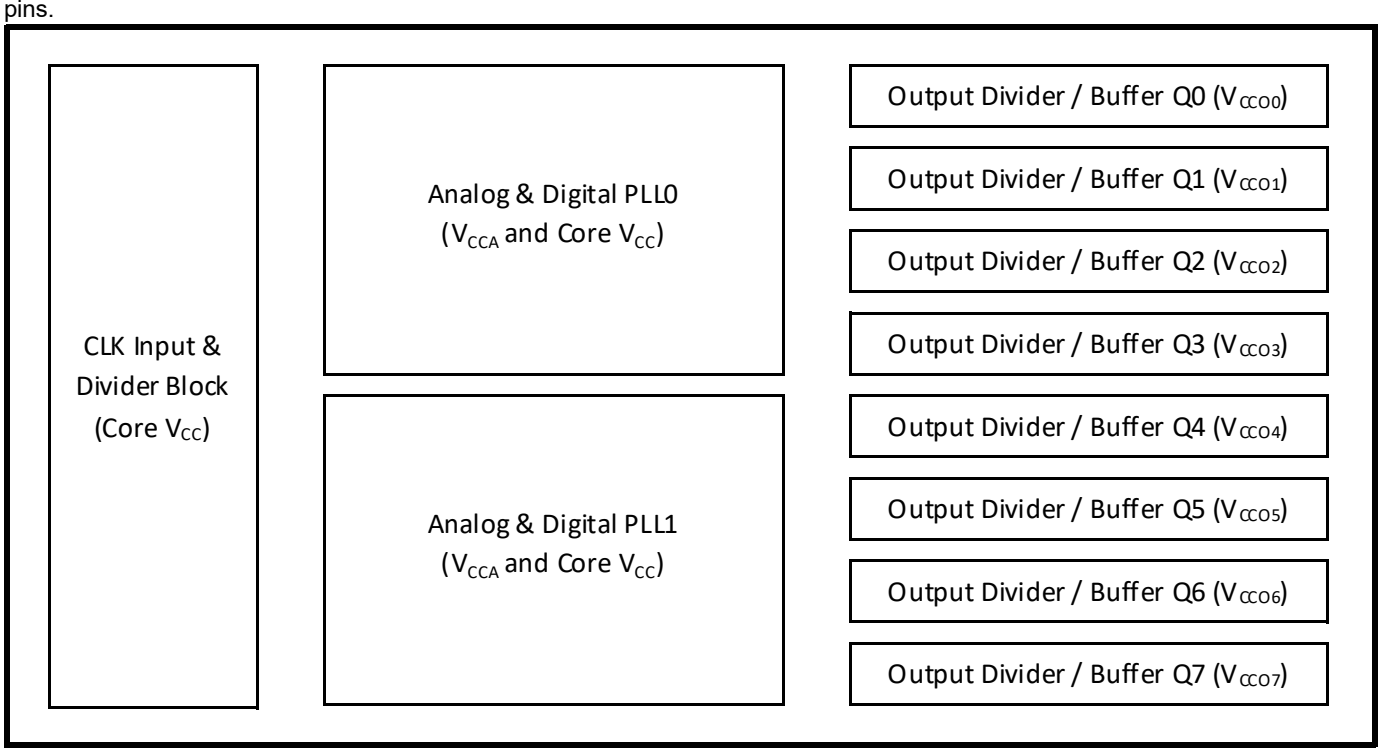

Figure 13. 8T49N283 Power Domains

For the output paths shown above, there are three different structures that are used. Q0 and Q1 use one output path structure, Q2 and Q3 use a second structure and Q[4:7] use a 3rd structure. Power consumption data will vary slightly depending on the structure used as shown in the appropriate tables below.

Power Consumption Calculation

Determining total power consumption involves several steps:

1. Determine the power consumption using maximum current values for core and analog voltage supplies from Table 7A and Table 7B, on page 46.
2. Determine the nominal power consumption of each enabled output path.
   a. This consists of a base amount of power that is independent of operating frequency, as shown in Table 14A through Table 14G (depending on the chosen output protocol).
   b. Then there is a variable amount of power that is related to the output frequency. This can be determined by multiplying the output frequency by the FQ_Factor shown in Table 14A through Table 14G.
3. All of the above totals are then summed.

© 2019 Renesas Electronics Corporation

Thermal Considerations

Once the total power consumption has been determined, it is necessary to calculate the maximum operating junction temperature for the device under the environmental conditions it will operate in. Thermal conduction paths, air flow rate and ambient air temperature are factors that can affect this. The thermal conduction path refers to whether heat is to be conducted away via a heatsink, via airflow or via conduction into the PCB through the device pads (including the ePAD). Thermal conduction data is provided for typical scenarios in Table 13 below. Please contact IDT for assistance in calculating results under other scenarios.

Table 13. Thermal Resistance θ_{JA} for 56-Lead VFQFN, Forced Convection

θ_{JA} by Velocity			
Meters per Second	**0**	**1**	**2**
Multi-Layer PCB, JEDEC Standard Test Boards	16.0°C/W	12.14°C/W	11.02°C/W

Current Consumption Data and Equations

Table 14A. 3.3V LVPECL Output Calculation Table

LVPECL	FQ_Factor (mA/MHz)	Base_Current (mA)
Q0	0.00624	40.3
Q1		
Q2	0.01445	63.6
Q3		
Q4	0.00609	42.2
Q5		
Q6		
Q7		

Table 14B. 3.3V LVDS Output Calculation Table

LVDS	FQ_Factor (mA/MHz)	Base_Current (mA)
Q0	0.00664	49.6
Q1		
Q2	0.01479	73.0
Q3		
Q4	0.00646	51.5
Q5		
Q6		
Q7		

Table 14C. 3.3V LVCMOS Output Calculation Table

LVCMOS	Base_Current (mA)
Q0	37.5
Q1	
Q2	61.1
Q3	
Q4	40.1
Q5	
Q6	
Q7	

Table 14D. 2.5V LVPECL Output Calculation Table

LVPECL	FQ_Factor (mA/MHz)	Base_Current (mA)
Q0	0.00409	33.0
Q1		
Q2	0.01179	56.4
Q3		
Q4	0.00369	35.4
Q5		
Q6		
Q7		

Table 14E. 2.5V LVDS Output Calculation Table

LVDS	FQ_Factor (mA/MHz)	Base_Current (mA)
Q0	0.00412	41.9
Q1		
Q2	0.01217	65.3
Q3		
Q4	0.00425	43.6
Q5		
Q6		
Q7		

Table 14F. 2.5V LVCMOS Output Calculation Table

LVCMOS	Base_Current (mA)
Q0	31.0
Q1	
Q2	54.6
Q3	
Q4	33.2
Q5	
Q6	
Q7	

© 2019 Renesas Electronics Corporation

Table 14G. 1.8V LVCMOS Output Calculation Table

LVCMOS	Base_Current (mA)
Q0	26.8
Q1	
Q2	50.4
Q3	
Q4	29.0
Q5	
Q6	
Q7	

Applying the values to the following equation will yield output current by frequency:

Qx Current (mA) = FQ_Factor * Frequency (MHz) + Base_Current

where:

Qx Current is the specific output current according to output type and frequency

FQ_Factor is used for calculating current increase due to output frequency

Base_Current is the base current for each output path independent of output frequency

The second step is to multiply the power dissipated by the thermal impedance to determine the maximum power gradient, using the following equation:

$T_J = T_A + (\theta_{JA} * Pd_{total})$

where:

T_J is the junction temperature (°C)

T_A is the ambient temperature (°C)

θ_{JA} is the thermal resistance value from Table 13, on page 65, dependent on ambient airflow (°C/W)

Pd_{total} is the total power dissipation of the 8T49N283 under usage conditions, including power dissipated due to loading (W)

Note that for LVPECL outputs the power dissipation through the load is assumed to be 27.95mW. When selecting LVCMOS outputs, power dissipation through the load will vary based on a variety of factors including termination type and trace length. For these examples, power dissipation through loading will be calculated using C_{PD} (found in Table 2, on page 5) and output frequency:

$Pd_{OUT} = C_{PD} * F_{OUT} * V_{CCO}^2$

where:

Pd_{out} is the power dissipation of the output (W)

Cpd is the power dissipation capacitance (pF)

Fout is the output frequency of the selected output (MHz)

V_{CCO} is the voltage supplied to the appropriate output (V)

Example Calculations

Example 1 – Common Customer Configuration (3.3V Core Voltage)

Output	Output Type	Frequency (MHz)	V_{CCO}
Q0	LVPECL	245.76	3.3
Q1	LVPECL	245.76	3.3
Q2	LVPECL	33.333	3.3
Q3	LVPECL	33.333	3.3
Q4	LVDS	125	3.3
Q5	LVDS	125	3.3
Q6	LVCMOS	25	3.3
Q7	LVCMOS	25	3.3
PLL0	Enabled		
PLL1	Enabled		

- Core Supply Current, I_{CC} = **100mA (max)**
- Analog Supply Current, I_{CCA} = **265mA (max)**

Q0 Current = 0.00624x245.76 + 40.3 = 41.83mA

Q1 Current = 0.00624x245.76 + 40.3 = 41.83mA

Q2 Current = 0.01445x33.333 + 63.6 = 64.08mA

Q3 Current = 0.01445x33.333 + 63.6 = 64.08mA

Q4 Current = 0.00646x125 + 51.5 = 52.3mA

Q5 Current = 0.00646x125 + 51.5 = 52.3mA

Q6 Current = 40.1mA

Q7 Current = 40.1mA

- Total Output Current = **396.62mA (max)**

  Total Device Current = 100mA + 265mA + 396.6mA = **761.6mA**

  Total Device Power = 3.465V * 761.6mA = **2639mW**

- Power dissipated through output loading:

  LVPECL = 27.95mW * 4 = **111.8mW**

  LVDS = already accounted for in device power

  LVCMOS = 14.5pF * 25MHz * $3.465V^2$ * 2 output pairs = **8.7mW**

Total Power = 2639mW + 111.8mW + 8.7mW = **2759.5mW or 2.76W**

With an ambient temperature of 85°C and no airflow, the junction temperature is:

T_J = 85°C + 16.0°C/W * 2.76W = **129.2°C**

This junction temperature is above the maximum allowable. In instances where maximum junction temperature is exceeded adjustments need to be made to either airflow or ambient temperature. In this case, adjusting airflow to 1m/s (θ_{JA} = 12.14°C/W) will reduce junction temperature to 118.5°C. If no airflow adjustments can be made, the maximum ambient operating temperature must be reduced by a minimum of 4.2°C.

© 2019 Renesas Electronics Corporation

Example 2 – High-Frequency Customer Configuration (3.3V Core Voltage)

Output	Output Type	Frequency (MHz)	V_{CCO}
Q0	LVDS	625.00	2.5
Q1	LVDS	625.00	2.5
Q2	LVPECL	161.133	2.5
Q3	LVPECL	161.133	2.5
Q4	LVDS	25	3.3
Q5	LVDS	25	3.3
Q6	LVPECL	125	2.5
Q7	LVDS	156.25	2.5
PLL0	Enabled		
PLL1	Disabled		

- Core Supply Current, I_{CC} = **100mA (max)**
- Analog Supply Current, I_{CCA} = **187mA (max, PLL0 path only)**

Q0 Current = 0.00412x625 + 41.9 = 44.48mA

Q1 Current = 0.00412x625 + 41.9 = 44.48mA

Q2 Current = 0.01179x161.133 + 56.4 = 58.3mA

Q3 Current = 0.01179x161.133 + 56.4 = 58.3mA

Q4 Current = 0.00646x25 + 51.5 = 51.66mA

Q5 Current = 0.00646x25 + 51.5 = 51.66mA

Q6 Current = 0.00369x125 + 35.4 = 35.86mA

Q7 Current = 0.00425x166.25 + 43.6 = 44.26mA

- Total Output Current = **285.68mA** (V_{CCO} = 2.5V), **103.3mA** (V_{CCO} = 3.3V)

  Total Device Power = 3.465V *(100mA + 187mA + 103.3mA) + 2.625V * 285.68mA = **2102.3mW**

- Power dissipated through output loading:

  LVPECL = 27.95mW * 3 = **83.9mW**

  LVDS = already accounted for in device power

  LVCMOS = n/a

  Total Power = 2102.3mW + 83.9mW = **2186.2mW or 2.19W**

With an ambient temperature of 85°C, the junction temperature is:

T_J = 85°C + 16.0°C/W *2.19W = **120°C**

This junction temperature is below the maximum allowable.

Example 3 – Low Power Customer Configuration (2.5V Core Voltage)

Output	Output Type	Frequency (MHz)	V_{CCO}
Q0	LVDS	156.25	2.5
Q1	LVDS	156.25	2.5
Q2	LVDS	161.133	2.5
Q3	LVCMOS	33.333	1.8
Q4	LVCMOS	25	1.8
Q5	LVCMOS	25	1.8
Q6	LVCMOS	25	1.8
Q7	LVDS	156.25	2.5
PLL0	Enabled		
PLL1	Enabled		

- Core Supply Current, I_{CC} = **95mA (max)**
- Analog Supply Current, I_{CCA} = **260mA (max)**

Q0 Current = 0.00412x156.25 + 41.9 = 42.54mA

Q1 Current = 0.00412x156.25 + 41.9 = 42.54mA

Q2 Current = 0.01217x161.133 + 65.3 = 67.26mA

Q3 Current = 50.4mA

Q4 Current = 29mA

Q5 Current = 29mA

Q6 Current = 29mA

Q7 Current = 0.00425x156.25 + 43.6 = 44.26mA

- Total Output Current = **196.6mA** (V_{CCO} = 2.5V), **137.4mA** (V_{CCO} = 1.8V)

  Total Device Power = 2.625V *(95mA + 260mA + 196.6mA) + 1.89V * 137.4mA = **1707.6mW**

- Power dissipated through output loading:

  LVPECL = n/a

  LVDS = already accounted for in device power

  LVCMOS_33.3MHz = 17pF * 33.3MHz * $1.89V^2$ * 1 output pair = **2.02mW**

  LVCMOS_25MHz = 12.5pF * 25MHz * $1.89V^2$ * 3 output pairs = **3.35mW**

  Total Power = 1707.6mW + 2.02mW + 3.35mW = **1713mW or 1.7W**

With an ambient temperature of 85°C, the junction temperature is:

TJ = 85°C + 16.0°C/W *1.7W = **112.2°C**

This junction temperature is below the maximum allowable.

Reliability Information

Table 15. θ_{JA} vs. Air Flow Table for a 56-Lead VFQFN

θ_{JA} vs. Air Flow			
Meters per Second	**0**	**1**	**2**
Multi-Layer PCB, JEDEC Standard Test Boards	16.0°C/W	12.14°C/W	11.02°C/W

NOTE: Theta JA (θ_{JA})values calculated using a 4-layer JEDEC PCB (114.3mm x 101.6mm), with 2oz. (70µm) copper plating on all 4 layers.

Transistor Count

The transistor count for 8T49N283 is: 959,346

Marking Diagram



1. Lines 1 and 2 are the part number.
2. “002” is indicative of a configuration-specific number (dash code).
3. “#” denotes stepping.
4. “YYWW” denotes: “YY” is the last two digits of the year, and “WW” is the work week number that the part was assembled.
5. “$” denotes the mark code.

Package Outline Drawings

The package outline drawings are appended at the end of this document and are accessible from the link below. The package information is the most current data available.

www.idt.com/document/psc/nlnlg-56-package-outline-80-x-80-mm-body-epad-660mm-sq-050-mm-pitch-vfqfp-n

Ordering Information

Table 16. Ordering Information

Part/Order Number	Marking	Package	Shipping Packaging	Temperature
8T49N283C-dddNLGI	IDT8T49N283C-dddNLGI	56-Lead VFQFN, Lead-Free	Tray	-40°C to +85°C
8T49N283C-dddNLGI8	IDT8T49N283C-dddNLGI	56-Lead VFQFN, Lead-Free	Tape & Reel, Pin 1 Orientation: EIA-481-C	-40°C to +85°C
8T49N283C-dddNLGI#	IDT8T49N283C-dddNLGI	56-Lead VFQFN, Lead-Free	Tape & Reel, Pin 1 Orientation: EIA-481-D	-40°C to +85°C

NOTE: For the specific -ddd order codes, refer to *FemtoClock NG Universal Frequency Translator Ordering Product Information guide*.

Table 17. Pin 1 Orientation in Tape and Reel Packaging

Part Number Suffix	Pin 1 Orientation	Illustration
NLGI8	Quadrant 1 (EIA-481-C)	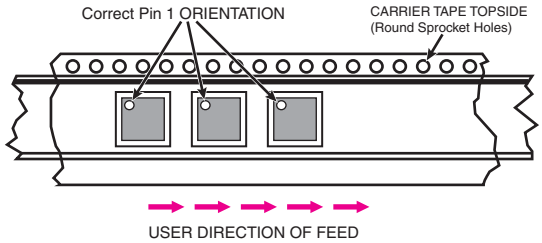
NLGI#	Quadrant 2 (EIA-481-D)	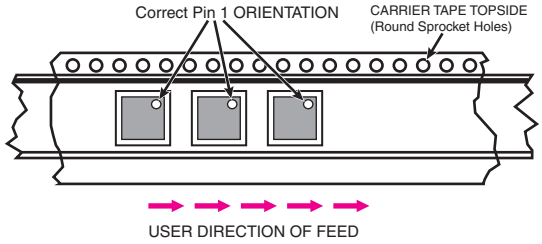

ERRATA

Errata # 1: EEPROM CRC Check Failure

Errata: if the UFT++ attempts to load its initial configuration from an external EEPROM and the CRC check fails, the serial port will not complete write operations and will only respond to reads with values of 0 until device is reset via nRST pin.
- if no EEPROM access is attempted, no EEPROM is found or the EEPROM read succeeds there are no issues
- The CRC failure condition can be detected by reading the Global Interrupt Status Register at address 21Fh. If the nEEP_CRC bit is low, then the device's serial port is now in the failed state
- if the device is also programmed to load its registers from the internal One-Time Programmable memory, those register settings will be correctly loaded and used.

Work-Around: by reading the nEEP_CRC bit, this condition can be detected. Once detected, the user may attempt to retry the EEPROM load operation by asserting then releasing the nRST input pin. If the retry attempt continues to fail, then no further recovery is possible. Note that a persistent EEPROM CRC failure indicates a corrupted configuration is present and the device could not be correctly configured anyway.

Fix Plan: None

Errata # 2: GPIOs Can't Use Input Mode if V_{CCO} = 1.8V

Errata: When the V_{CCO} pin adjacent to a GPIO pin is set to 1.8V and the core V_{CC} of the chip is at 3.3V, the GPIO pin will not behave as an input, either a General-Purpose Input or an Output Enable. Mappings are according to the following relationships:

GPIO0 / V_{CCO3}

GPIO1 / V_{CCO3}

GPIO2 / V_{CCO4}

GPIO3 / V_{CCO7}

Work-Around: Ensure that voltage used on V_{CCO} pins is no less than V_{CC} - 1.6V.

Fix Plan: None

Revision History

Revision Date	Description of Change
January 29, 2019	• Corrected the I^2C read sequence diagrams in Figure 3 and Figure 4 to match I^2C specification and device actual performance. Note: Only the drawings were incorrect – the part's behavior did not change and continues to meet the I^2C specification. • Added a Marking Diagram • Updated the Package Outline Drawings; however, no mechanical changes
February 3, 2016	Per PCN# W1512-01, Effective Date 03/18/2016 - changed Part/Order Number from 8T49N283B-dddNLGI to 8T49N283C-dddNLGI, and Marking from IDT8T49N283B-dddNLGI to IDT8T49N283C-dddNLGI. Updated Datasheet header/footer.
October 7, 2015	Updated Pin Descriptions, pins 3, 4, 18/19 and 53/52. Output Phase Control on Switchover - added sentence to second and third paragraphs. Added notes toTable 4, "GPIO Configuration". AC Characteristics Table - updated Note 5. Updated Figure 13, 8T49N283 Power Domains.
July 8, 2015	Device Start-up & Reset Behavior - added second paragraph.
May 12, 2015	AC Characteristics Table - added missing minimum Output Frequency spec for Q2, Q3 (LVPECL, LVDS) and LVCMOS. "Termination for 3.3V LVPECL Outputs" - updated Figure 10A. "Crystal Recommendation" - included additional crystal recommendation. Deleted IDT prefix/suffix throughout the datasheet.
July 10, 2014	Description - deleted HCSL from first paragraph/last sentence. "Principles of Operation": Input Clock Selection - updated last paragraph. Output Phase Alignment - Output Phase Alignment, revised: – Number Bullet 3 – First Bullet/first sentence LVCMOS Operation - revised last two sentences of paragraph. Table 6D, "Serial Interface Control Register Bit Field Locations and Descriptions" updated: Bit, UFTADD[6:2], UFTADD[1], and UFTADD[0]. Table 6M, "Output Clock Source Control Register Bit Field Locations and Descriptions" changed D7/D6 and D5/D4 from Reserved to 10. Typical RMS Phase Jitter Table - Corrected the symbol in $t_{JIT.}$ Corrected "Package Outline Drawings". "Ordering Information" - added Orientation in Tape & Reel Packaging.

© 2019 Renesas Electronics Corporation

Revision Date	Description of Change
April 29, 2014	Added NOTE 1 to C_{IN}. General-Purpose I/Os & Interrupts section: added last paragraph. I^2C Master Mode: third bullet - corrected text from (0xe0) to (E0h). *External Serial EEPROM Contents Table*, *EEPROM Offset (Hex) column* - deleted '0x' prefix from the entry rolls. *Contents column* - corrected entry 0x08 - 0xDF changed to 08h - DFh. Table Header: deleted '(Binary)' from 'Default Value" column; corrected value formatting in the 'Default Value" column. Digital PLL0 Feedback Control Register Table, Address 002[B-E] rows - modified Register column from 'Rsvd' to 'FFh'. Digital PLL1 Feedback Control Register Table - corrected Register 0056. Address 005[E-F], 0060 and 0061 rows - modified Register column from 'Rsvd' to 'FFh'. Power Down Control Register Bit Table - Address 00B4, changed Bit D0 from DBL_EN to DBL_DIS. Absolute Maximum Ratings Table - add NOTE, changes GPIO to GPIO[0:3]. LVCMOS DC Characteristics Table - V_{OH} - added nINT pin.

REVISIONS			
REV	DESCRIPTION	DATE	APPROVED
00	INITIAL RELEASE	5/23/16	JH

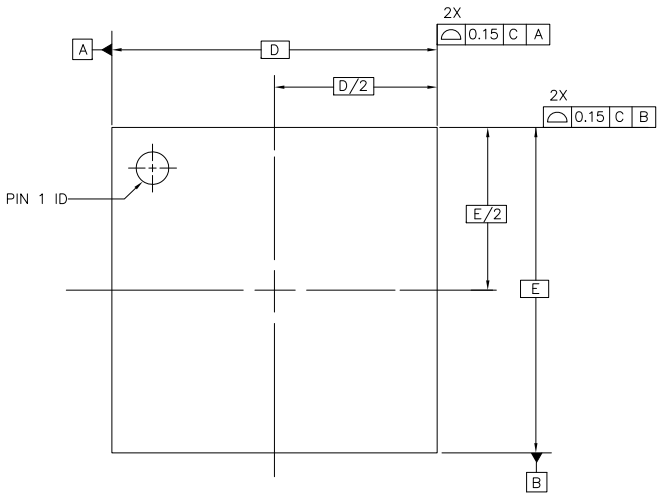

TOP VIEW

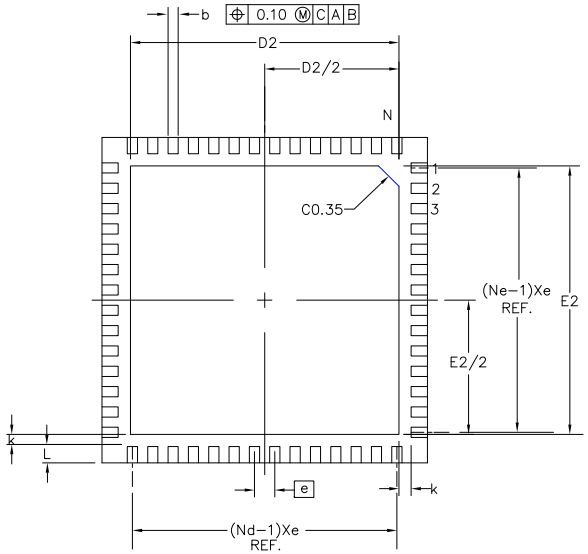

BOTTOM VIEW

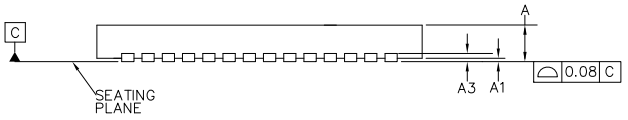

SIDE VIEW

SYMBOL	DIMENSION		
	MIN.	NOM.	MAX.
e		0.50 BSC	
N		56	
Nd		14	
Ne		14	
L	0.30	0.40	0.50
b	0.18	0.25	0.30
D2	6.45	6.60	6.75
E2	6.45	6.60	6.75
A	0.80	0.90	1.00
A1	0.00	0.02	0.05
A3		0.20 REF.	
D		8.00 BSC	
E		8.00 BSC	
θ	–	–	12°
k	–	0.30	–

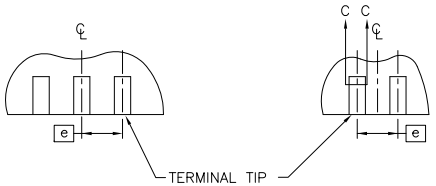

FOR ODD TERMINAL/SIDE FOR EVEN TERMINAL/SIDE

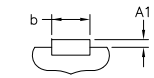

SECTION "C–C"
SCALE: NONE

NOTES:
1. DIMENSIONING & TOLERANCING CONFORM TO ASME Y14.5M. – 1994.
2. ALL DIMENSIONS ARE IN mm.

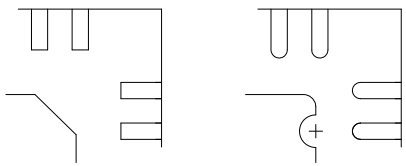

PIN #1 ID AND TIE BAR MARK OPTION

TOLERANCES UNLESS SPECIFIED DECIMAL ANGULAR XX± ± XXX± XXXX±	IDT™ www.IDT.com	6024 SILVERCREEK VALLEY ROAD SAN JOSE CA. 95138 PHONE: (408) 284–8200 FAX: (408) 284–8591	
APPROVALS / DATE	TITLE	NL/NLG 56 PACKAGE OUTLINE 8.0 X 8.0 mm BODY, EPAD 6.60mm SQ 0.50 mm PITCH VFQFP–N	
DRAWN PKP 12/07/01			
CHECKED			
	SIZE	DRAWING No.	REV
	C	PSC–4110–02	00
	DO NOT SCALE DRAWING		SHEET 1 OF 2

REVISIONS			
REV	DESCRIPTION	DATE	APPROVED
00	INITIAL RELEASE	5/23/16	JH

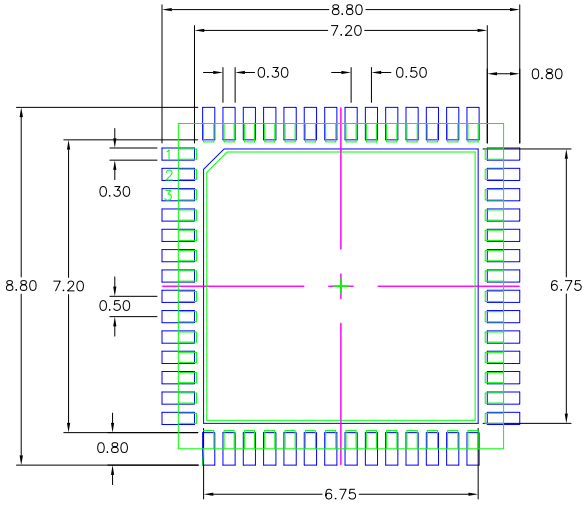

RECOMMENDED LAND PATTERN DIIMENSON

NOTES:

1. ALL DIMENSIONS ARE IN mm. ANGLES IN DEGREES.
2. TOP DOWN VIEW. AS VIEWED ON PCB.
3. COMPONENT OUTLINE SHOWS FOR REFERENCE IN GREEN.
4. LAND PATTERN IN BLUE. NSMD PATTERN ASSUMED.
5. LAND PATTERN RECOMMENDATION PER IPC-7351B GENERIC REQUIREMENT FOR SURFACE MOUNT DESIGN AND LAND PATTERN.

TOLERANCES UNLESS SPECIFIED DECIMAL ANGULAR XX± ± XXX± XXXX±		IDT™ www.IDT.com	6024 SILVERCREEK VALLEY ROAD SAN JOSE CA. 95138 PHONE: (408) 284-8200 FAX: (408) 284-8591
APPROVALS	DATE	TITLE	NL/NLG 56 PACKAGE OUTLINE 8.0 X 8.0 mm BODY, EPAD 6.60mm SQ 0.50 mm PITCH VFQFP-N
DRAWN PKP	12/07/01		
CHECKED			
		SIZE C	DRAWING No. PSC-4110-02 REV 00
		DO NOT SCALE DRAWING	SHEET 2 OF 2

IMPORTANT NOTICE AND DISCLAIMER

RENESAS ELECTRONICS CORPORATION AND ITS SUBSIDIARIES (“RENESAS”) PROVIDES TECHNICAL SPECIFICATIONS AND RELIABILITY DATA (INCLUDING DATASHEETS), DESIGN RESOURCES (INCLUDING REFERENCE DESIGNS), APPLICATION OR OTHER DESIGN ADVICE, WEB TOOLS, SAFETY INFORMATION, AND OTHER RESOURCES “AS IS” AND WITH ALL FAULTS, AND DISCLAIMS ALL WARRANTIES, EXPRESS OR IMPLIED, INCLUDING, WITHOUT LIMITATION, ANY IMPLIED WARRANTIES OF MERCHANTABILITY, FITNESS FOR A PARTICULAR PURPOSE, OR NON-INFRINGEMENT OF THIRD PARTY INTELLECTUAL PROPERTY RIGHTS.

These resources are intended for developers skilled in the art designing with Renesas products. You are solely responsible for (1) selecting the appropriate products for your application, (2) designing, validating, and testing your application, and (3) ensuring your application meets applicable standards, and any other safety, security, or other requirements. These resources are subject to change without notice. Renesas grants you permission to use these resources only for development of an application that uses Renesas products. Other reproduction or use of these resources is strictly prohibited. No license is granted to any other Renesas intellectual property or to any third party intellectual property. Renesas disclaims responsibility for, and you will fully indemnify Renesas and its representatives against, any claims, damages, costs, losses, or liabilities arising out of your use of these resources. Renesas' products are provided only subject to Renesas' Terms and Conditions of Sale or other applicable terms agreed to in writing. No use of any Renesas resources expands or otherwise alters any applicable warranties or warranty disclaimers for these products.

(Rev.1.0 Mar 2020)

Corporate Headquarters

TOYOSU FORESIA, 3-2-24 Toyosu,
Koto-ku, Tokyo 135-0061, Japan
www.renesas.com

Contact Information

For further information on a product, technology, the most up-to-date version of a document, or your nearest sales office, please visit:
www.renesas.com/contact/

Trademarks

Renesas and the Renesas logo are trademarks of Renesas Electronics Corporation. All trademarks and registered trademarks are the property of their respective owners.

© 2020 Renesas Electronics Corporation. All rights reserved.