PART NUMBER	ENGINEERING NUMBER	FINISH LENGTH
1300061256	105000A03F030	3.00′ +1.75″ -0 [.9M +44.5 -0]
1300061257	105000A03F060	6.00′ +2.19″ -0 [1.8M +55.6 -0]
1300061260	105000A03F120	12.00′ +3.50″ -0 [3.7M +88.9 -0]
1300061263	105000A03F150	15.00′ +6.50″ -0 [4.6M +165.1 -0]
1300061264	105000A03F200	20.00′ +6.50″ -0 [6.1M +165.1 -0]
1300061267	105000A03F250	25.00′ +12.50″ -0 [7.6M +317.5 -0]

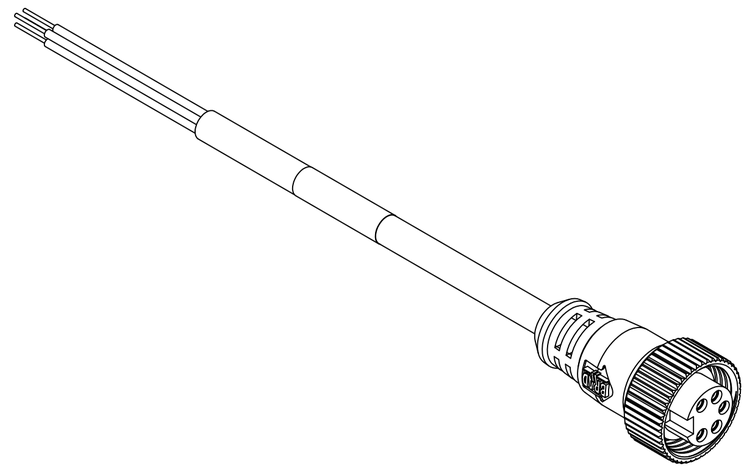

NOTE

1) MATERIAL: SEE TABLE
2) FINISHES: SEE TABLE
3) WRAP LABEL IS MARKED WITH P/N, DATE CODE, VOLTAGE & AMPERAGE
4) MATES WITH: MINI CHANGE, 5 POLE RECEPTACLE
5) ELECTRICAL DATA:
   INLINE CORDSET
   FEMALE A-SIZE WITH FLYING LEADS
   20AWG UNSHIELDED
   POLES: 5
   MAX. VOLTAGE: 300V
   MAX. CURRENT 5.6A
   PROTECTION IP67
   TEMPERATURE RANGE: -20°C TO 105°C
6) PACKAGING:
   CABLE ASSEMBLIES ARE BAGGED SEPERATELY IN POLY BAGS WITH BAR CODE LABEL ATTACHED TO OUTSIDE OF BAG.
7)ASSEMBLY IS RoHS COMPLIANT.
8)CERTIFICATION
   CSA CERTIFIED, FILE NO. LR6837

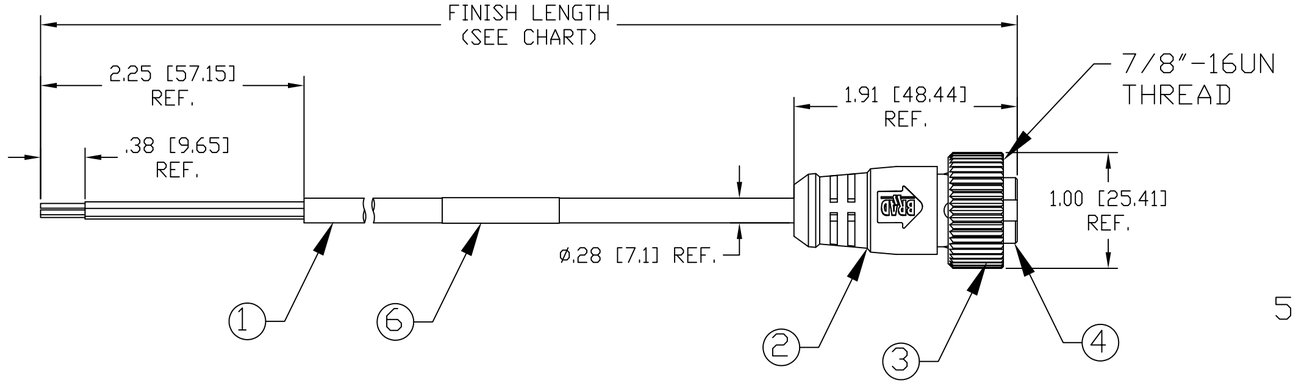

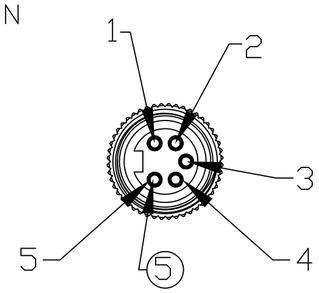

FEMALE
FACE VIEW

P1

1	RED WITH WHITE
2	RED
3	GREEN-GND
4	RED WITH YELLOW
5	RED WITH BLACK

WIRING DIAGRAM

ITEM	QTY.	DESCRIPTION	MATERIAL	FINISH
6	1	LABEL	PLASTIC FILM	BLACK/YELLOW
5	5	CONTACT SOCKET	COPPER ALLOY	GOLD PLATED
4	1	INSERT	PVC	YELLOW
3	1	COUPLING NUT	ZINC DIE CAST	BLACK E-COATED
2	1	OVERMOLD	PVC	YELLOW
1	1	CABLE, 18 AWG-5	PVC	YELLOW

RELEASE
EC NO: WNA2010-0397
DRWN: BWOODMAN 2009/12/29
CH'KD: LHARTMAN —
APPR: JFMURPHY 2010/01/05
DESCRIPTION
REV A

QUALITY SYMBOL
▼=0
(C)=0

GENERAL TOLERANCES (UNLESS SPECIFIED)

	mm	INCH
4 PLACES	±---	±---
3 PLACES	±---	±.005
2 PLACES	±0.13	±.010
1 PLACE	±0.25	±.020
ANGULAR ±1/2°		

DRAFT WHERE APPLICABLE MUST REMAIN WITHIN DIMENSIONS

DIMENSION STYLE: IN/MM
SCALE: 1:1
DESIGN UNITS: INCH
THIRD ANGLE PROJECTION

DRAWN BY: ---- DATE: ----
CHECKED BY: LHARTMAN DATE: 2009/12/29
APPROVED BY: JFMURPHY DATE: 2010/01/05

TITLE
MINI CHANGE ASSEMBLY
5-POLE FEMALE ST
18/5AWG PVC AUTO

molex MOLEX INCORPORATED

MATERIAL NO.: SEE CHART
DOCUMENT NO.: SD-130006-030
SHEET NO.: 1 OF 1
SIZE: C

THIS DRAWING CONTAINS INFORMATION THAT IS PROPRIETARY TO MOLEX INCORPORATED AND SHOULD NOT BE USED WITHOUT WRITTEN PERMISSION

FACE VIEW-FEMALE INSERT

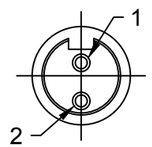	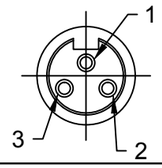	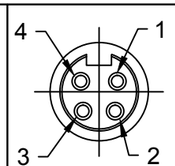	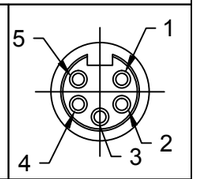
1 BROWN 2 BLUE	1 GREEN 2 RED/BLK 3 RED/WHT	1 RED/BLK 2 RED/WHT 3 RED 4 GREEN	1 RED/WHT 2 RED 3 GREEN 4 RED/YEL 5 RED/BLK

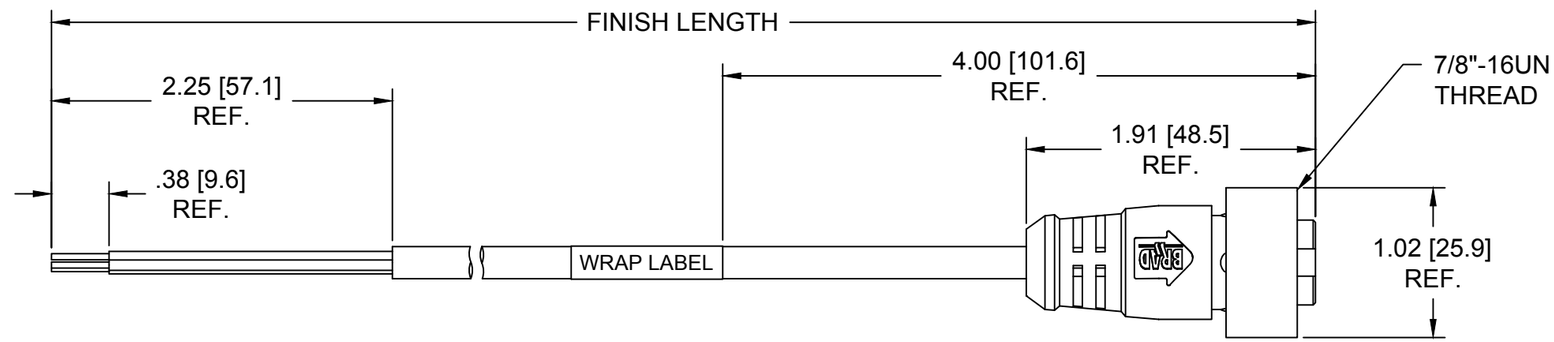

10X000A03XXXXX

POLES
2
3
4
5

LENGTH
M010 - 1 METER
M100 - 10 METER
F060 - 6 FEET
F600 - 60 FEET

COUPLING NUT
1 - SS STR.
2 - N-M
3 - NB
8 - SS HEX
BLANK - ZINC STR.

SPECIFICATIONS

MATERIALS:
COUPLING NUT: SEE CHART
CONTACTS: COPPER ALLOY, GOLD PLATED
INSERT: PVC, YELLOW
OVERMOLD: PVC, YELLOW
CABLE: 18AWG YELLOW PVC, 2-5 CONDUCTORS DEPENDENT ON POLE COUNT

ELECTRICAL:
CURRENT RATING: 10A (2P & 3P), 7A (4P), 5.6A (5P)
VOLTAGE: 300V

MECHANICAL:
TEMPERATURE RATING: -20°C TO 105°C
PROTECTION: IP67 (IN FULLY MATED POSITION)

REV	DESCRIPTION
A	INITIAL RELEASE EC NO: IPG2015-0104 DRWN: BARDEN 2014/07/17 CH'KD: BRUPERT 2014/07/18 APPR: JFMURPHY 2014/08/02

QUALITY SYMBOLS
▼=0
(C)=0

GENERAL TOLERANCES (UNLESS SPECIFIED)	mm	INCH
4 PLACES	±---	±---
3 PLACES	±---	±.005
2 PLACES	±0.13	±.010
1 PLACE	±0.25	±.020
ANGULAR ±1/2°		

DRAFT WHERE APPLICABLE MUST REMAIN WITHIN DIMENSIONS

DIMENSION STYLE: IN/MM	SCALE: NTS	DESIGN UNITS: INCH	THIRD ANGLE PROJECTION
DRAWN BY: BARDEN	DATE: 2014/07/17	TITLE: MINI-CHANGE ASSEMBLY 2-5P FE STRAIGHT 18AWG CABLE	
CHECKED BY: BRUPERT	DATE: 2014/07/18		
APPROVED BY: JFMURPHY	DATE: 2014/08/02	molex MOLEX INCORPORATED	
MATERIAL NO.: SEE CHART		DOCUMENT NO.: SD-130006-070	SHEET NO.: 1 OF 1
SIZE: B	THIS DRAWING CONTAINS INFORMATION THAT IS PROPRIETARY TO MOLEX INCORPORATED AND SHOULD NOT BE USED WITHOUT WRITTEN PERMISSION		