Rev	AWO #	Description	Date	Appr
-		RELEASED	11/23/18	

APPROVED: _____

DATE: _____ TITLE: _____

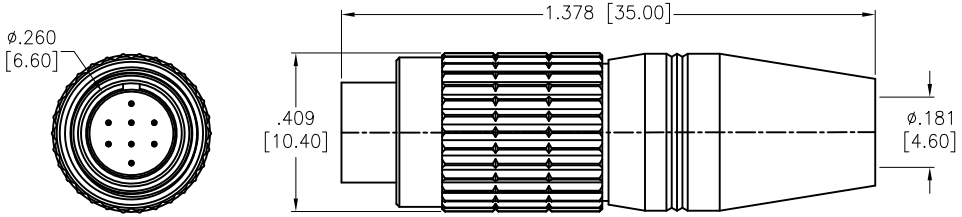

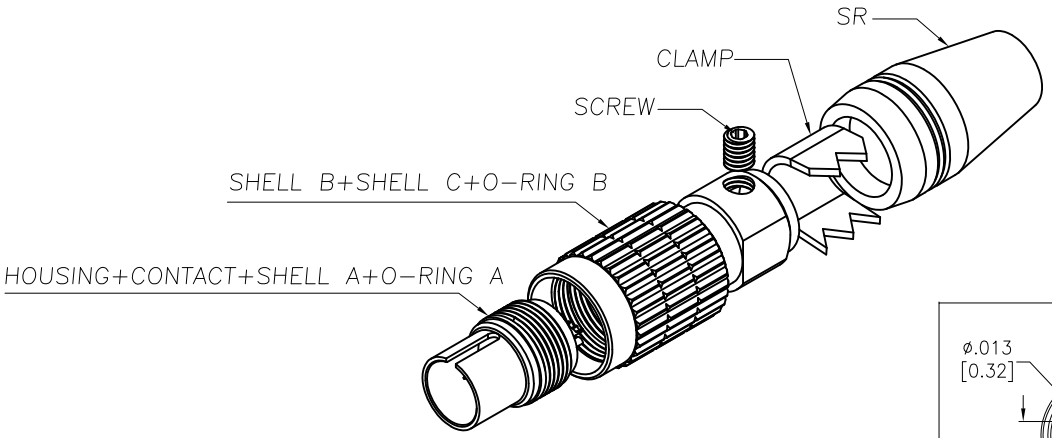

SD-PNLXX-MMTAL-S00-000

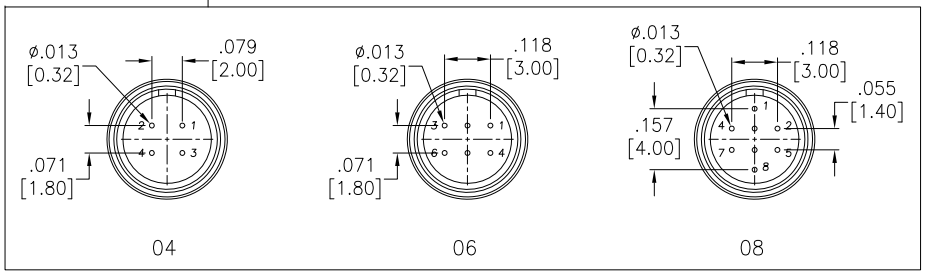

SPECIFICATIONS:
Material:
Housing: Nylon 46, rated UL 94V-0, Color: Black
Contacts: Brass, 10u" min. Gold
Shell A: Zinc Alloy, Nickel plated
Shell B: Brass, Nickel plated
Shell C: Brass, Nickel plated
O-ring A: EPDM, Color: Black
O-ring B: NBR, Color: Black
Spring: Stainless
Screw: Alloy Steel
SR: TPR
Environmental:
Lead free, RoHS compliant

RoHS COMPLIANT

UNLESS OTHERWISE SPECIFIED
ALL DIMENSIONS ARE INCHES [MM]
TOLERANCES: EXCEPT AS NOTED

INCHES		HOLES	
.X	± .10	Ø.X	±.10
.XX	± .020	Ø.XX	±.015
.XXX	± .015	Ø.XXX	±.010

APPROVALS		DATE
DRAWN	HR	11/23/18
CHECKED	AC	11/23/18
APPROVED		

ADAM TECH INTERCONNECTS
909 Rahway Avenue,
Union, NJ 07083
Phone: 908-687-5000
Fax: 908-687-5710

TITLE: WATERPROOF CONNECTOR, MALE M8 DIN, ASSEMBLY, SCREW TYPE, SOLDER

SIZE	PART NO.	REV.
X	SD-PNLXX-MMTAL-S00-000	-

REF:	SCALE:	SHEET
S00200T	NTS	1 OF 1