DSU9H & DSU9X MODELS

SIL3 PLe INCREMENTAL ENCODERS

Introduction

When an automation system requires a high degree of risk mitigation of failure modes, often times Functional Safety equipment can be a part of the solution. Sensata | BEI Sensors offers a wide range of Functional Safety encoders to fit most any application or electrical interface requirement. Rated at SIL3 (PLe), these encoders allow safe operation in set-up, production and maintenance modes, significantly reducing operational risks. All encoders have the option of a Digital HTL or TTL operation as an alternative to the Sine/Cosine outputs found on most Functional Safety encoders. This makes them a compatible replacement for existing encoders when migrating to a higher safety level of operation. DSU9H & DSU9X offer 30 mm standard through shaft models with optional reduction sleeves for mounting on smaller diameter shafts. The encoder body is 90mm in diameter, available in aluminum or stainless steel.

DSU9H

DSU9X

Features

- Usable up to SIL3 and Cat.4 / PLe according to IEC 61508 / EN ISO 13849
- Suitable for safe motor feedback according to IEC 61800-5-2
- Especially designed for heavy-duty applications (steel, paper, wood, mills, cranes…) Compact and robust design. Excellent resistance to shock and vibration
- Stainless steel version available (DSU9X)
- 90mm encoder, 30mm standard through shaft, PEEK reduction hub available
- High protection level: IP66 (DSU9X), IP65 (DSU9H)
- High temperature performance –20°C to +85°C
- Power supply 5Vdc or 11/30Vdc
- Digital TTL/RS422 or HTL Push-pull or sine/cosine 1Vpp output
- Available resolution up to 2048 ppr
- Connector or cable output – side orientation
- Adapted anti-rotation system

Applications

- Industrial automation
- Automated guided vehicles
- Mills for lumber, steel and other metals
- Printing and packaging equipment
- Food processing equipment
- Forming and die presses

SPECIFICATIONS

Mechanical

	DSU9H	DSU9X
Material	**Cover:** powder coated aluminum **Body:** aluminum	**Cover:** AISI 303 stainless steel **Body:** AISI 303 stainless steel
	Shaft: AISI 303 stainless steel	
Ball Bearings	6807 - Sealed	
Maximum Loads	**Axial:** 25 N	
	Radial: 50 N	
Shaft Inertia	< 120,000 g.mm^2	< 125,000 g.mm^2
Static/Dynamic torque	30 / 300 mN.m	250 / 600 mN.m

Copyright © 2022 Sensata Technologies, Inc.

Permissible max. speed	6000 RPM	3000 RPM
Continuous max. speed	3000 RPM	1500 RPM
Theoretical mechanical lifetime $L_{10}h$ [A]	> 18 X 10^9 turns / 100,000 hours	> 9 X 10^9 turns / 100,000 hours
Encoder weight (approx.)	0.65 kg	1.3 kg

[A] ***Continuous max. speed – ½ max. load – according to ISO 281:*** *1990, L_{10}*

Temperature Conditions

Operating temperature	- 20 ... + 85 °C (encoder T°)
Storage temperature	- 20 ... + 85 °C

Electrical Characteristics / Functional Safety Parameters [B]

Electronic Version	Output signals	Operating Voltage +V	Supply current	Current per channel pair	Short circuit protected	Reverse polarity protected	PFD	PFH	MTTFd	DC
2G2	Digital TTL RS422	5V +/-5%[C] ⎓ 250mA	100mA with no load	40mA	Yes	Yes	7.51E-05	8.58E-10	1331	HIGH
5G2		11-30V[C] ⎓ 250mA			Not to +V		9.52E-05	1.09E-09	1050	
5G5	Digital HTL				Yes		9.52E-05	1.09E-09	1050	
2WT	Sine Cosine 1Vpp	5V +/-5%[C] ⎓ 250mA	70mA with no load	10mA	Yes		4.29E-05	4.90E-10	2328	
5WT		11-30V[C] ⎓ 250mA			Not to +V		6.60E-05	7.53E-10	1515	

[B] ***Safety mission time:*** *20 years*
[C] ***UL listed:*** *Device must be supplied by a Class 2, LPS or SELV limited energy source.*

Standards Conformity

	DSU9H	DSU9X
Protection (EN 60529)	IP65	IP66
Humidity (EN 60068-2-38)	93% @ 65°C	
Shock (EN 60068-2-27)	≤ 500 m/s² (during 6 ms)	
Vibration (EN 60068-2-6)	≤ 200 m/s² (55 … 2 000 Hz)	
EMC Immunity Test	EN 61000-6-2,increased levels	
EMC Emission Test	EN 61000-6-4,increased levels	
Isolation	1000 Veff	
Salt Spray (EN 60068-2-11 part 2)	96h	168h
Functional safety	IEC 61508	
	IEC 62061	
	ISO 13849-1	
	IEC 61800-5-2	
Encoders usable up to SIL3 / PLe with external specific requirements, see safety user manual for details.		
Z and Z/ are not safety signals.		

Copyright © 2022 Sensata Technologies, Inc.

Electrical Connections

		0V	+V	A or S	B or C	Z	A/ or S/	B/ or C/	Z/	Ground
G6	**M23 - 12 pins CW**	1	2	3	4	5	6	7	8	Connector body
G8	**M23 - 12 pins CCW**	10 + 11	2 + 12	8	5	3	1	6	4	Connector body
G3	**PVC cable 8 wires 8230/020**	WH white	BN brown	GN green	YE yellow	GY grey	PK pink	BU blue	RD red	General shielding
GP	**PUR cable 12 wires 8230/050**	WH white + WH/GN white /green	BU blue + BN/GN brown / green	GY grey	BN brown	RD red	PK pink	GN green	BK black	General shielding
U3	**PVC cable 8 wires**	WH	BN	GN	YE	GY	PK	BU	RD	General shield
GC	**PUR cable**	BK	RD	GN	BN	VT	YE	OG	BU	General shield
GM	**M12 8 pins**	1	2	3	4	5	6	7	8	Connector body

Note: All connections are UL certified, except G3 and GP

RESOLUTIONS

1024 2048

DIMENSIONS

DSU9H – radial M23 connector

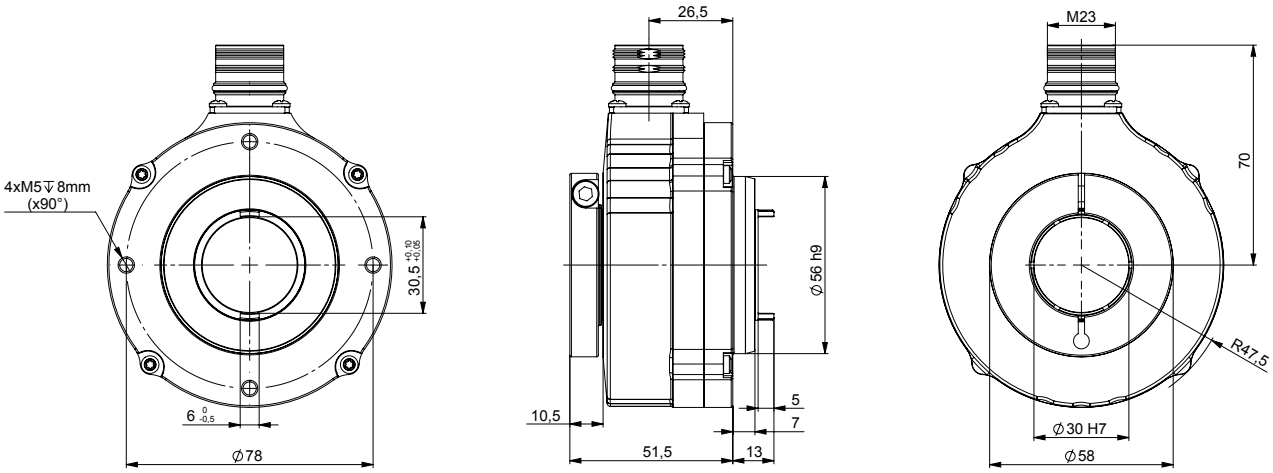

Copyright © 2022 Sensata Technologies, Inc.

DSU9H – radial cable and 20mm reduction hub

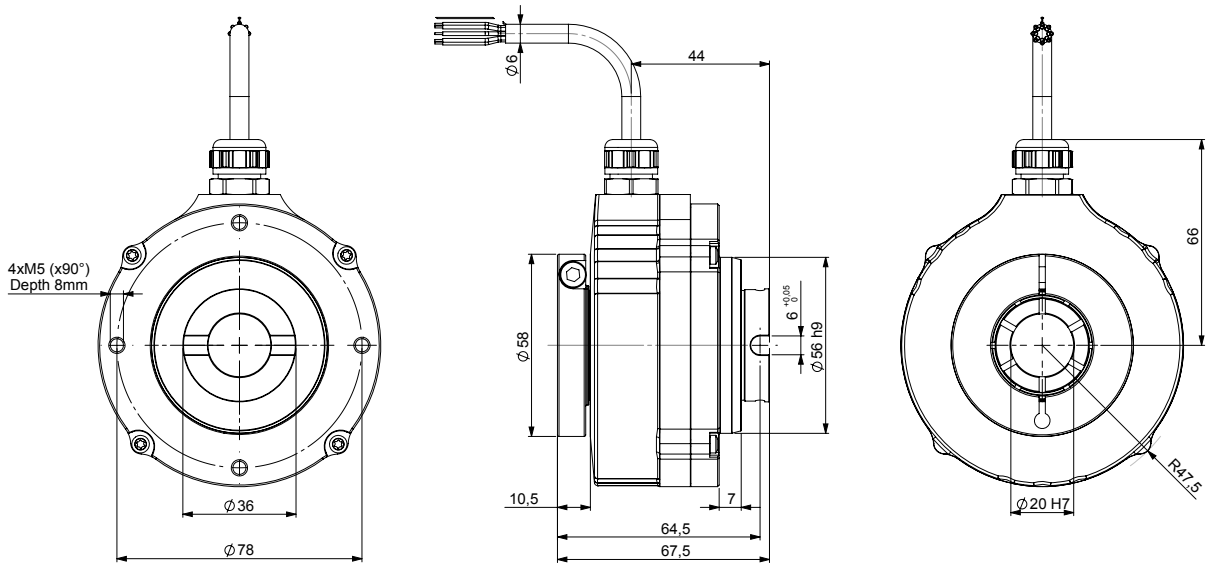

DSU9X- radial M23 connector - IP66 option

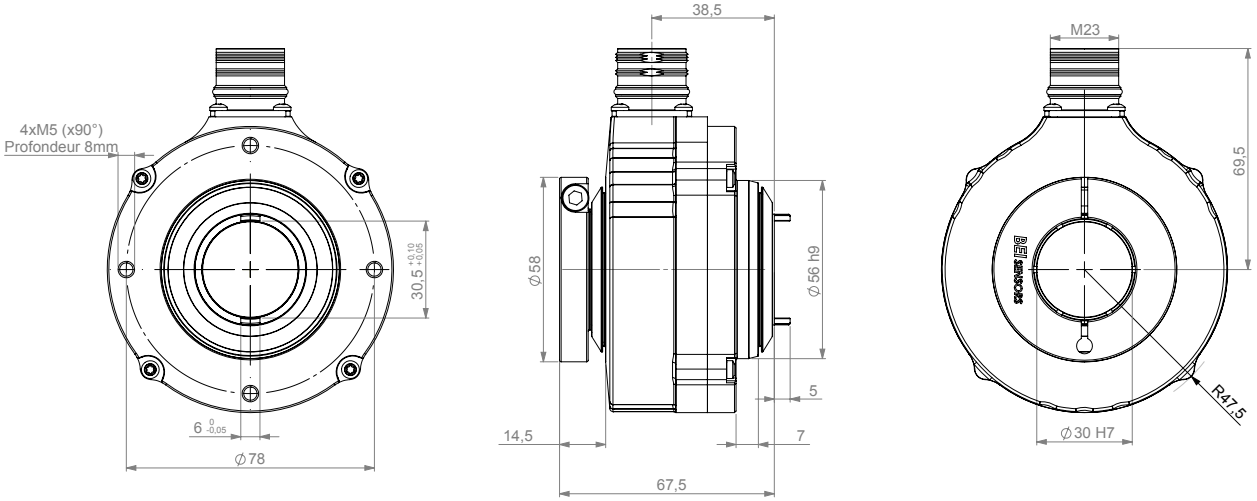

COUPLING INTERFACE

Stator coupling kit M9445/045

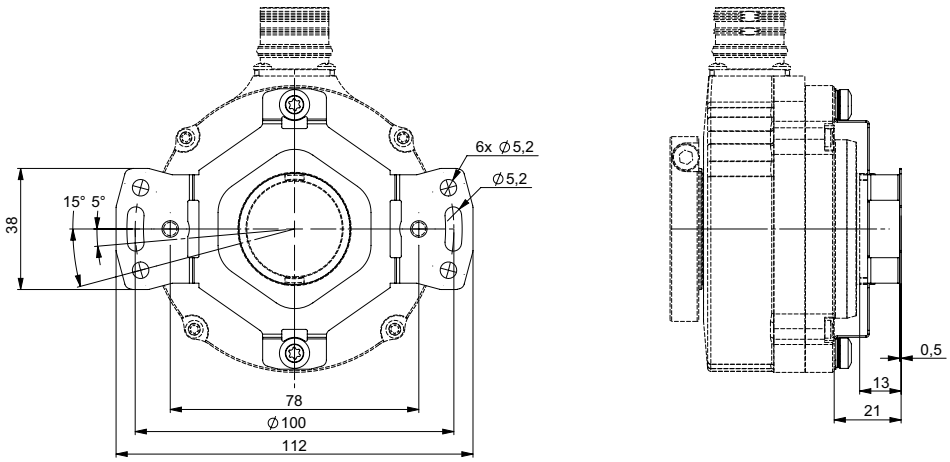

Copyright © 2022 Sensata Technologies, Inc.

Tether arm kit M9445/046

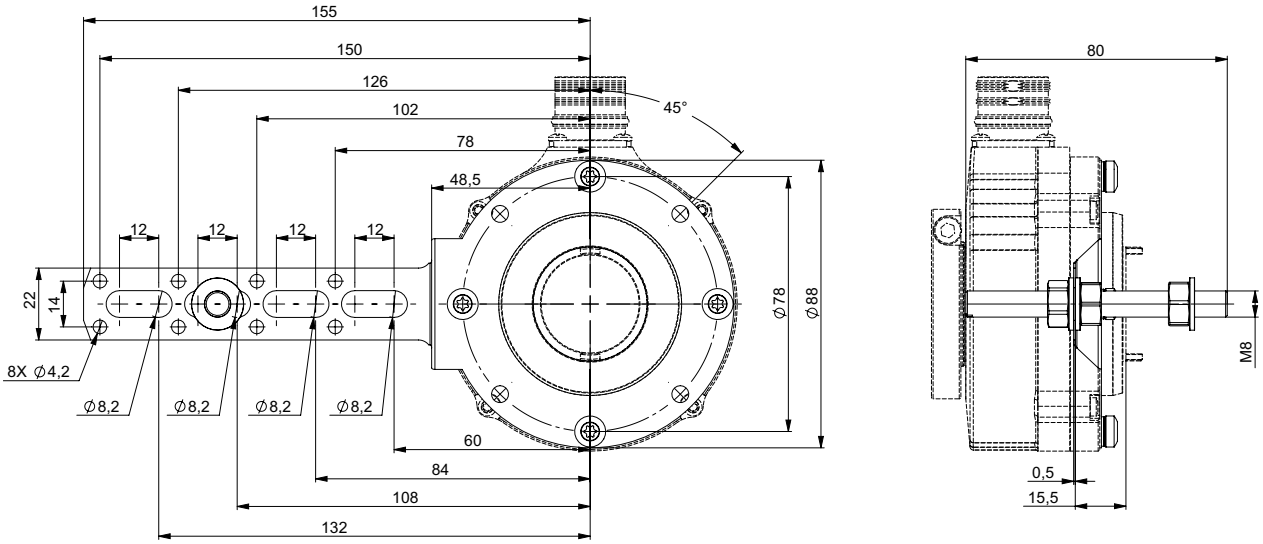

		9445/045	9445/046
Permissible misalignments	**Axial**	+/- .5mm	+/- 1mm
	Radial	+/- 0.3mm	+/- 0.2mm
	Perpend.	+/- 3°	+/- 5°
	Runout	0.1mm	0.1mm
Angular rigidity		540 N.m/rad	530 N.m/rad

GENERAL NOTES

For a safe installation according to the required safety level needed in the application, refer to the user safety User Manual. The safety User Manual provides the technical information (drawings, electrical data, etc...) for a safe integration. A quick installation guide is provided with each encoder for use by the technician who installs the device on the equipment.

Copyright © 2022 Sensata Technologies, Inc.

ORDERING OPTIONS

Example: DSU9X30 /01/ 5G29 // 01024 // GPR050 // ** DW**

Contact the factory for special versions, ex: resolution, connection, flange...

DSU9X 30 / 01 / 5G2 9 // 01024 // GP R 050 // ** DW**

Family

DSU9H: Aluminum
DSU9X: Stainless

Shaft

30: 30mm
E8: 1.00in=25.4mm (with reduction hub)
25: 25mm (with reduction hub)
20: 20mm (with reduction hub)

IP

Blank: IP65 standard
01: IP66 (available for DSU9X only)

Voltage Output

2G2: 5Vdc, TTL RS422
5G2: 11- 30Vdc, TTL RS422
5G5: 11- 30Vdc, HTL
2WT: 5Vdc, Sine 1 Vpp (analog)
5WT: 11- 30Vdc, Sine 1 Vpp (analog)

Channels

9: Digital electronics
AA/ BB/ ZZ/
B before A, CW viewed from flange side
Z gated A&B

N: Analog electronics
SS/ CC/ ZZ/
C before S, CW viewed from flange side
Z ungated
Contact factory for other configurations

Resolution

1024, 2048

Output Termination

G6: M23 12 pins CW
G8: M23 12 pins CCW
GM: M12 8 pins
GP: PUR cable 12 wires
G3: PVC cable 8 wires
U3: PVC Cable 8 wires
GC: PUR cable 8 wires

Output Orientation

R: Radial

Cable Length

xxx: Cable Length (ex.: 020 = 2 Meters)
Blank: No Cable

Reduction Hub

**** :** No reduction hub
U2 : Insulated Reduction hub

Anti-rotation

DW :** 9445/045 stator coupling
BB :** 9445/046 tether arm (delivered not mounted on flange)
**** :** No antirotation

* Parts mounted on encoder and fasteners included in the encoder box.

AGENCY APPROVALS & CERTIFICATIONS

CE

TÜVRheinland CERTIFIED Functional Safety Type Approved www.tuv.com ID 0600000000

c UL us LISTED Proc. Cont. Eq. E477663

FS

RoHS

BEI Sensors SAS
Sensata Technologies
Espace Européen de l'Entreprise
9, rue de Copenhague
B.P. 70044 Schiltigheim
F 67013 Strasbourg Cedex

Tél : +33 (0)3 88 20 80 80
Fax : +33 (0)3 88 20 87 87
Mail : position-info.eu@sensata.com
Web : www.sensata.com

Copyright © 2022 Sensata Technologies, Inc.

ACCESORIES

Description	Part Number
Reduction Hub To create 20mm, 25mm and 25,4mm (1.00 in) ID bore on DSU9 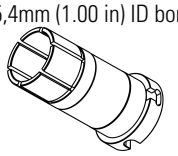	For DSU9H models: 9418/S20 = 20mm 9418/S25 = 25mm 9418/SE8 = 1" (25.4mm) For DSU9X models: 9418/S20-01 = 20mm 9418/S25-01 = 25mm 9418/SE8-01 = 1" (25.4mm)
Safety Rated Flexmount Kit Hardware included 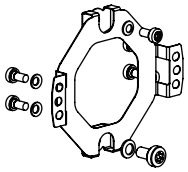	M9445/045
Safety Encoder Tether Arm Kit Hardware included 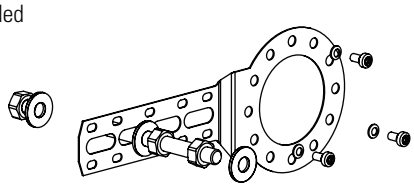	M9445/046
Standard Mating Connector 2m, 5m, 10m Mating Cable Assembly 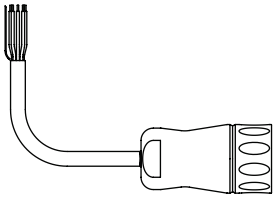	Extension cords compatible with G6 connection option: RAL-020-001 = M23, PVC cable, 2m RAL-050-001 = M23, PVC cable, 5m RAL-100-001 = M23, PVC cable, 10m Extension cords compatible with G8 connection option: RAL-020-012 = M23, PUR cable, 2m RAL-050-020 = M23, PUR cable, 5m RAL-100-028 = M23, PUR cable, 10m Extension cords compatible with GM connection option: RAL-020-039 = M12 overmolded, PUR cable, 2m RAL-050-052 = M12 overmolded, PUR cable, 5m RAL-100-050 = M12 overmolded, PUR cable, 10m

Made in France

Sensata Technologies, Inc. ("Sensata") data sheets are solely intended to assist designers ("Buyers") who are developing systems that incorporate Sensata products (also referred to herein as "components"). Buyer understands and agrees that Buyer remains responsible for using its independent analysis, evaluation and judgment in designing Buyer's systems and products. Sensata data sheets have been created using standard laboratory conditions and engineering practices. Sensata has not conducted any testing other than that specifically described in the published documentation for a particular data sheet. Sensata may make corrections, enhancements, improvements and other changes to its data sheets or components without notice.
Buyers are authorized to use Sensata data sheets with the Sensata component(s) identified in each particular data sheet. HOWEVER, NO OTHER LICENSE, EXPRESS OR IMPLIED, BY ESTOPPEL OR OTHERWISE TO ANY OTHER SENSATA INTELLECTUAL PROPERTY RIGHT, AND NO LICENSE TO ANY THIRD PARTY TECHNOLOGY OR INTELLECTUAL PROPERTY RIGHT, IS GRANTED HEREIN. SENSATA DATA SHEETS ARE PROVIDED "AS IS". SENSATA MAKES NO WARRANTIES OR REPRESENTATIONS WITH REGARD TO THE DATA SHEETS OR USE OF THE DATA SHEETS, EXPRESS, IMPLIED OR STATUTORY, INCLUDING ACCURACY OR COMPLETENESS. SENSATA DISCLAIMS ANY WARRANTY OF TITLE AND ANY IMPLIED WARRANTIES OF MERCHANTABILITY, FITNESS FOR A PARTICULAR PURPOSE, QUIET ENJOYMENT, QUIET POSSESSION, AND NON-INFRINGEMENT OF ANY THIRD PARTY INTELLECTUAL PROPERTY RIGHTS WITH REGARD TO SENSATA DATA SHEETS OR USE THEREOF.
All products are sold subject to Sensata's terms and conditions of sale supplied at www.sensata.com SENSATA ASSUMES NO LIABILITY FOR APPLICATIONS ASSISTANCE OR THE DESIGN OF BUYERS' PRODUCTS. BUYER ACKNOWLEDGES AND AGREES THAT IT IS SOLELY RESPONSIBLE FOR COMPLIANCE WITH ALL LEGAL, REGULATORY AND SAFETY-RELATED REQUIREMENTS CONCERNING ITS PRODUCTS, AND ANY USE OF SENSATA COMPONENTS IN ITS APPLICATIONS, NOTWITHSTANDING ANY APPLICATIONS-RELATED INFORMATION OR SUPPORT THAT MAY BE PROVIDED BY SENSATA.
Mailing Address: Sensata Technologies, Inc., 529 Pleasant Street, Attleboro, MA 02703, USA.

CONTACT US

Americas
+1 (800) 350 2727
sensors@sensata.com
Europe, Middle East & Africa
+33 (3) 88 20 8080
position-info.eu@sensata.com
Asia Pacific
sales.isasia@list.sensata.com
China +86 (21) 2306 1500
Japan +81 (45) 277 7117
Korea +82 (31) 601 2004
India +91 (80) 67920890
Rest of Asia +886 (2) 27602006 ext 2808

Copyright © 2022 Sensata Technologies, Inc.

Specification No.:02182-001 Rev:02/15/2022