RP604Z331B-EV

Ultra-low Quiescent Current (I_Q = 0.3 µA), 300 mA, Buck-Boost DC/DC Converter Evaluation Board

No. EEV-415-Z331B-190212

RP604Z331B-EV is the evaluation board for RP604 which has the below features, benefits and specifications.

OVERVIEW

The RP604Z is a buck-boost converter featuring a minimum supply current and a high efficiency at low-load. The device operates at the low operating quiescent current (IQ = 0.3 µA) to make the most of battery life for the battery driver operated intermittently.

KEY BENEFITS

- The low supply current (IQ = 0.3 µA) can achieve making battery life longer and battery's size-reduction.
- Wide range of input voltage (1.8 V to 5.5 V) can support for every batteries from a coin-type battery to a USB port.

KEY SPECIFICATIONS

- Input Voltage: 1.8 V to 5.5 V
- Output Voltage: 1.6 V to 5.2 V, 0.1 V step
- Output Voltage Accuracy: ±1.5%
- Maximum Output Current: 300 mA at Buck
- Built-in Driver On-resistance (VIN = 3.6 V): PMOS = Typ.0.12 Ω, NMOS = Typ. 0.12 Ω
- Operating Quiescent Current (IQ): 0.3 µA
- Standby Current: 0.01 µA
- Protection Features: UVLO, OVP, LX Peak Current, and Thermal Shutdown
- For more details on RP604 IC, please refer to https://www.nisshinbo-microdevices.co.jp/en/products/power/dcdc/rp604/rp604-ea.pdf.

Part Number Information

Product Name	Package
RP604Zxx1$	WLCSP-20-P2

xx: Specify the set output voltage (V_{SET}).

xx: Fixed Output Voltage Type , 33: V_{SET} = 3.3 V

$: Specify the auto-discharge function.

Version	Auto-discharge Function
B	Enable

PCB LAYOUT

RP604Z (Package: WLCSP-20-P2) PCB Layout

Topside

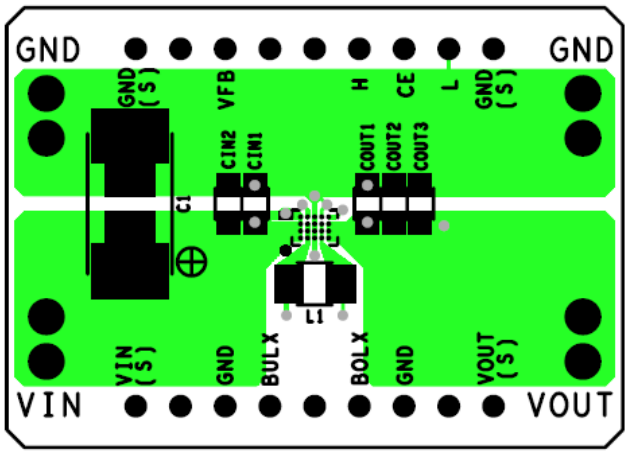

Backside

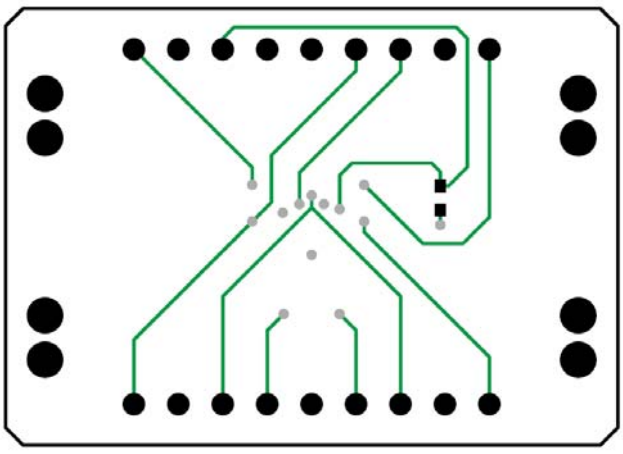

ABSOLUTE MAXIMUM RATINGS

Absolute Maximum Ratings (GND = 0 V)

Symbol	Parameter			Rating	Unit
V_{IN}	A/PVIN Pin Voltage			−0.3 to 6.5	V
V_{BULX}	BULX Pin Voltage			−0.3 to V_{IN} + 0.3	V
V_{BOLX}	BOLX Pin Voltage			−0.3 to V_{OUT} + 0.3	V
V_{CE}	CE Pin Voltage			−0.3 to 6.5	V
V_{OUT}	VOUT Pin Voltage			−0.3 to 6.5	V
V_{FB}	VFB Pin Voltage			−0.3 to 6.5	V
I_{LX}	BULX/BOLX Pin Output Current			900	mA
P_D	Power Dissipation(1)	WLCSP-20-P2	JEDEC STD. 51-9	1490	mW
Tj	Junction Temperature Range			−40 to 125	°C
Tstg	Storage Temperature Range			−55 to 125	°C

ABSOLUTE MAXIMUM RATINGS

Electronic and mechanical stress momentarily exceeded absolute maximum ratings may cause the permanent damages and may degrade the life time and safety for both device and system using the device in the field.
The functional operation at or over these absolute maximum ratings are not assured.

RECOMMENDED OPERATING CONDITIONS

Recommended Operating Conditions

Symbol	Parameter	Rating	Unit
V_{IN}	Input Voltage	1.8 to 5.5	V
Ta	Operating Temperature Range	−40 to 85	°C

RECOMMENDED OPERATING CONDITIONS

All of electronic equipment should be designed that the mounted semiconductor devices operate within the recommended operating conditions. The semiconductor devices cannot operate normally over the recommended operating conditions, even if when they are used over such conditions by momentary electronic noise or surge. And the semiconductor devices may receive serious damage when they continue to operate over the recommended operating conditions.

(1) Refer to *POWER DISSIPATION* for detailed information.

TYPICAL APPLICATION

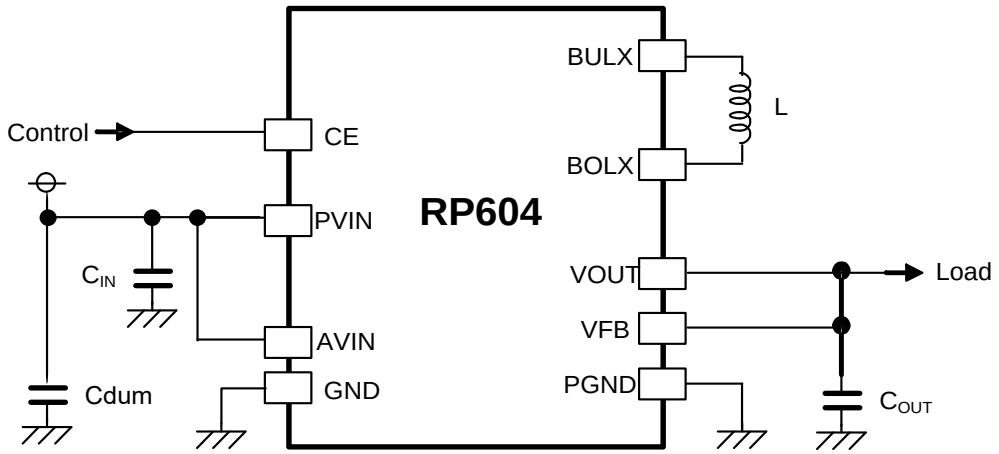

RP604 Typical Application Circuit

※Testing with this EV board, an external attachment might be necessary for evaluation of the correct performance of the RP604 and already has been attached as Cdum.
For evaluation, wiring for power supply or GND will be used. Considering the voltage drop or noise by the wiring, Cdum has been mounted on the EV board to obtain the right performance of the RP604 in the actual PCB layout or measurement unit's wire is very short, and Cdum will be unnecessary.

Recommended External Components[*1]

Symbol	Value
L	2.2 µH
C_{IN}	10 µF
C_{OUT}	22 µF
Cdum	10 µF × 2

[*1] The bill of materials will be attached on the shipment of each purchased evaluation board.

PIN DESCRIPTIONS



WLCSP-20-P2 Pin Configuration

WLCSP-20-P2 Pin Description

Pin No.	Pin Name	Description
A5, B5, C5	VOUT	Output Voltage Pin
A4, B4, C4	BOLX	Boost Switching Output Pin
A3, B3, C3, D3	PGND	Power GND Pin
A2, B2, C2	BULX	Buck Switching Output Pin
A1, B1, C1	PVIN	Power Input Voltage Pin
D1	AVIN	Analog Power Input Voltage Pin
D2	CE	Chip Enable Pin, Active-high
D4	AGND	Analog GND Pin
D5	VFB	Output Voltage Feedback Pin

TECHNICAL NOTES

The performance of a power source circuit using this device is highly dependent on a peripheral circuit. A peripheral component or the device mounted on PCB should not exceed a rated voltage, a rated current or a rated power. When designing a peripheral circuit, please be fully aware of the following points. Refer to *PCB Layout* below.

- When the built-in switches are turned off, the inductor may generate a spike-shaped high voltage. Use the high-breakdown voltage capacitor (C_{OUT}) which output voltage is 1.5 times or more than the set output voltage.
- Use an inductor that has a low DC resistance, has an enough tolerable current and is less likely to cause magnetic saturation. If the inductance value is extremely small, the peak current of L_X may increase. When the peak current of L_X reaches to the L_X limit current (I_{LXLIM}), overcurrent protection circuit starts to operate. When selecting the inductor, consider the maximum output current of Lx pin (I_{LXMAX}). For details, refer to *Calculation Method of Maximum Output Current of Lx Pin (I_{LXMAX}) in Continuous Mode* on the RP604 IC data sheet.
- When an intermediate voltage other than V_{IN} or GND is input to the CE pin, a supply current may be increased with a through current of a logic circuit in the IC. The CE pin is neither pulled up nor pulled down, therefore an operation is not stable at open.

1. The products and the product specifications described in this document are subject to change or discontinuation of production without notice for reasons such as improvement. Therefore, before deciding to use the products, please refer to our sales representatives for the latest information thereon.
2. The materials in this document may not be copied or otherwise reproduced in whole or in part without prior written consent of our company.
3. Please be sure to take any necessary formalities under relevant laws or regulations before exporting or otherwise taking out of your country the products or the technical information described herein.
4. The technical information described in this document shows typical characteristics of and example application circuits for the products. The release of such information is not to be construed as a warranty of or a grant of license under our company's or any third party's intellectual property rights or any other rights.
5. The products listed in this document are intended and designed for use as general electronic components in standard applications (office equipment, telecommunication equipment, measuring instruments, consumer electronic products, amusement equipment etc.). Those customers intending to use a product in an application requiring extreme quality and reliability, for example, in a highly specific application where the failure or misoperation of the product could result in human injury or death (aircraft, spacevehicle, nuclear reactor control system, traffic control system, automotive and transportation equipment, combustion equipment, safety devices, life support system etc.) should first contact us.
6. We are making our continuous effort to improve the quality and reliability of our products, but semiconductor products are likely to fail with certain probability. In order to prevent any injury to persons or damages to property resulting from such failure, customers should be careful enough to incorporate safety measures in their design, such as redundancy feature, fire containment feature and fail-safe feature. We do not assume any liability or responsibility for any loss or damage arising from misuse or inappropriate use of the products.
7. Anti-radiation design is not implemented in the products described in this document.
8. The X-ray exposure can influence functions and characteristics of the products. Confirm the product functions and characteristics in the evaluation stage.
9. WLCSP products should be used in light shielded environments. The light exposure can influence functions and characteristics of the products under operation or storage.
10. There can be variation in the marking when different AOI (Automated Optical Inspection) equipment is used. In the case of recognizing the marking characteristic with AOI, please contact our sales or our distributor before attempting to use AOI.
11. Please contact our sales representatives should you have any questions or comments concerning the products or the technical information.

NISSHINBO

Nisshinbo Micro Devices Inc.

Official website
https://www.nisshinbo-microdevices.co.jp/en/
Purchase information
https://www.nisshinbo-microdevices.co.jp/en/buy/