APPROVED: _____

DATE: _____ TITLE: _____

Rev	AWO #	Description	Date	Appr
-		RELEASED	5/15/13	
A		UPDATED DRAWING	5/18/16	HR/LL
B		UPDATE DRAWING	1/3/18	AY/MY

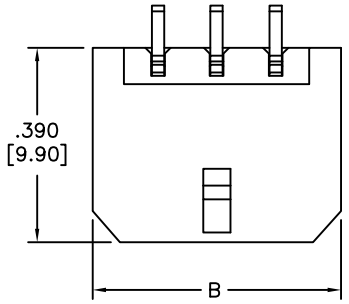

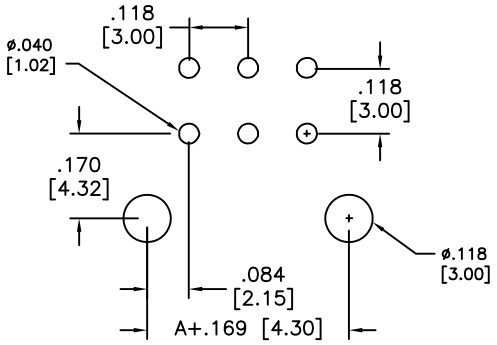

RECOMMENDED PCB LAYOUT

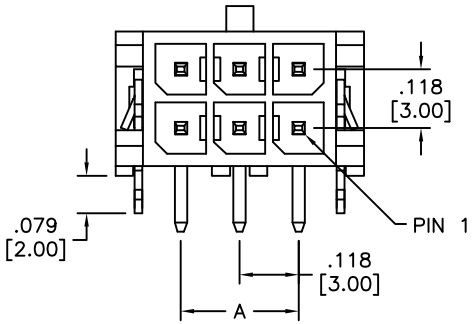

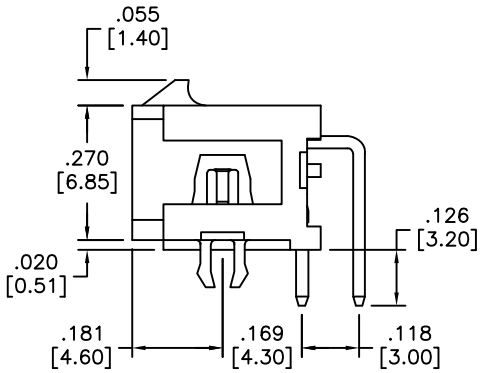

SPECIFICATIONS:

Material:

Insulator: Hi-Temp Thermoplastic, rated UL 94V-0

Insulator color: Black

Contacts: Brass

Plating:

Tin over Nickel underplate overall

Electrical:

Operating voltage: 250 V

Current rating: 20 & 22 Awg: 5 Amps max
24 Awg: 4 Amps max
26 Awg: 3 Amps max
28 Awg: 2 Amps max
30 Awg: 1 Amp max

Contact resistance: 10 mohms max

Dielectric strength: 1,500 VAC for 1 minute

Temperature Rating:

Temperature Rise: 30° max

Environmental:

Lead free, RoHS compliant.

RoHS COMPLIANT

Positions: 2 thru 24

A = .118 [3.00] x No. of Spaces

B = .118 [3.00] x No. of Spaces + .262 [6.65]

UNLESS OTHERWISE SPECIFIED
ALL DIMENSIONS ARE INCHES [MM]
TOLERANCES: EXCEPT AS NOTED

INCHES		HOLES	
.X	± .10	Ø.X	±.10
.XX	± .020	Ø.XX	±.015
.XXX	± .015	Ø.XXX	±.010

APPROVALS		DATE
DRAWN	AY	5/15/13
CHECKED	LW	5/15/13
APPROVED		

ADAM TECH
INTERCONNECTS
909 Rahway Avenue,
Union, NJ 07083
Phone: 908-687-5000
Fax: 908-687-5710

TITLE: .118" [3.0mm] MICRO FIT HEADER
DUAL ROW RIGHT ANGLE, SHORT BOARDLOCKS

SIZE	PART NO.	REV.
X	DML-XX-A-H-T-A-SBL	B

REF:	SCALE:	SHEET
S00123T	NTS	1 OF 1