MIC23303

4MHz PWM 3A Buck Regulator with HyperLight Load™ and Power Good

General Description

The MIC23303 is a high-efficiency 4MHz 3A synchronous buck regulator with HyperLight Load™ mode, Power Good output indicator, and programmable soft-start. HyperLight Load provides very high efficiency at light loads and ultra-fast transient response, which makes the MIC23303 perfectly suited for supplying processor core voltages. An additional benefit of this proprietary architecture is very low output ripple voltage throughout the entire load range with the use of small output capacitors. The tiny 3mm × 3mm DFN package saves precious board space and requires only six external components.

The MIC23303 is designed for use with a very small inductor, down to 0.33µH, and an output capacitor as small as 10µF that enables a total solution size less than 1mm in height.

The MIC23303 has very low quiescent current of 24µA and can achieve peak efficiency of 93% in continuous conduction mode. In discontinuous conduction mode, the MIC23303 can achieve 80% efficiency at 1mA.

The MIC23303 is available in a 12-pin 3mm × 3mm DFN package with an operating junction temperature range from –40°C to +125°C.

Datasheets and support documentation are available on Micrel's web site at: www.micrel.com.

Features

- Input voltage: 2.7V to 5.5V
- Output voltage: down to 0.65
- Up to 3A output current
- Up to 93% peak efficiency
- 80% typical efficiency at 1mA
- Power Good output
- Programmable soft-start
- 24µA typical quiescent current
- 4MHz PWM operation in continuous mode
- Ultra-fast transient response
- Low ripple output voltage
  - 35mVpp ripple in HyperLight Load mode
  - 5mV output voltage ripple in full PWM mode
- Fully-integrated MOSFET switches
- 0.01µA shutdown current
- Thermal-shutdown and current-limit protection
- 12-pin 3mm × 3mm DFN
- –40°C to +125°C junction temperature range

Applications

- Portable media/MP3 players
- Portable navigation devices (GPS)
- WiFi/WiMax/WiBro modules
- Digital Cameras
- Wireless LAN cards
- Portable applications

Typical Application

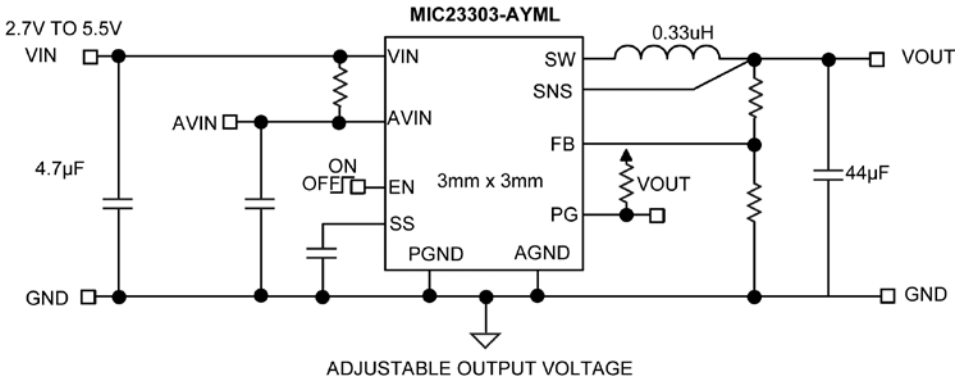

HyperLight Load is a trademark of Micrel, Inc.

Ordering Information

Part Number	Marking Code	Nominal Output Voltage	Junction Temperature Range	Package
MIC23303YML	WYA	Adjustable	–40°C to +125°C	12-Pin 3mm × 3mm DFN[1, 2]

Notes:

1. DFN is a GREEN RoHS compliant package. Lead finish is NiPdAu. Mold compound is Halogen Free.
2. DFN Pin 1 identifier is ● .

Pin Configuration

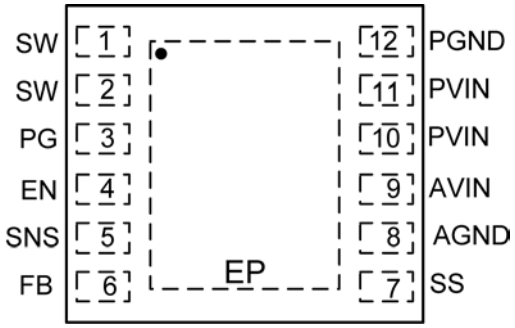

3mm x 3mm DFN (ML)
(Top View)

Pin Description

Pin Number (Adjustable)	Pin Name	Pin Function
1, 2	SW	Switch (Output): Internal power MOSFET output switches.
3	PG	Power Good: Open-drain output for the power good indicator. Use a pull-up resistor from this pin to a voltage source to detect a power good condition.
4	EN	Enable (Input): Logic high enables operation of the regulator. Logic low shuts down the device. Do not leave floating.
5	SNS	Sense: Connect to V_{OUT} as close to output capacitor as possible to sense output voltage.
6	FB	Feedback: Connect a resistor divider from the output to ground to set the output voltage.
7	SS	Soft Start: Place a capacitor from this pin to ground to program the soft start time. Do not leave floating, 2.2nF minimum C_{SS} is required.
8	AGND	Analog Ground: Connect to central ground point where all high current paths meet (C_{IN}, C_{OUT}, and PGND) for best operation.
9	AVIN	Supply Voltage (Power Input): Analog control circuitry. Connect to PVIN.
10, 11	PVIN	Input Voltage: Connect a capacitor to ground to decouple the noise.
12	PGND	Power Ground.
EP	ePad	Thermal pad: Connect to Ground plane for improved heat sinking.

Absolute Maximum Ratings[3]

Supply Voltage (V_{IN}) ..... –0.3V to 6V
Sense Voltage (V_{SNS}) ..... –0.3V to V_{IN}
Output Switch Voltage (V_{SW}) ..... –0.3V to V_{IN}
Enable Input Voltage (V_{EN}) ..... –0.3V to V_{IN}
Power Good Voltage (V_{PG}) ..... –0.3V to V_{IN}
Storage Temperature Range ..... –65°C to +150°C
Lead temperature (soldering, 10s) ..... 260°C
ESD Rating[5] ..... ESD Sensitive

Operating Ratings[4]

Supply Voltage (V_{IN}) ..... .2.7V to 5.5V
Enable Input Voltage (V_{EN}) ..... 0V to V_{IN}
Sense Voltage (V_{SNS}) ..... 0.65V to 5.5V
Junction Temperature Range (T_J) ..... –40°C ≤ T_J ≤ +125°C
Thermal Resistance
3mm × 3mm DFN-12 (θ_{JA}) ..... 61°C/W
3mm × 3mm DFN-12 (θ_{JC}) ..... 27°C/W

Electrical Characteristics[6]

T_A = 25°C; V_{IN} = V_{EN} = 3.6V; V_{OUT}=1.8V; L = 0.33µH; C_{OUT} = 44µF unless otherwise specified.
Bold values indicate –40°C ≤ T_J ≤ +125°C, unless otherwise noted.

Parameter	Condition	Min.	Typ.	Max.	Units
Supply Voltage Range		**2.7**		**5.5**	V
Undervoltage Lockout Threshold	(turn-on)	**2.3**	2.53	**2.8**	V
Undervoltage Lockout Hysteresis			275		mV
Quiescent Current	I_{OUT} = 0mA, SNS > 1.2 × V_{OUT} Nominal		24	**40**	µA
Shutdown Current	V_{EN} = 0V; V_{IN} = 5.5V		0.01	**5**	µA
Output Voltage Accuracy	V_{IN} = 3.6V if V_{OUTNOM} < 2.5V, I_{LOAD} = 20mA	**–2.5**		**+2.5**	%
	V_{IN} = 4.5V if V_{OUTNOM} ≥ 2.5V, I_{LOAD} = 20mA				
Feedback Regulation Voltage	I_{LOAD} = 20mA	**0.604**	0.62	**0.635**	V
Current Limit	SNS = 0.9 × V_{OUTNOM}	**3.5**	6.5	10	A
Output Voltage Line Regulation	V_{IN} = 3.6V to 5.5V if V_{OUTNOM} < 2.5V, I_{LOAD} = 20mA		0.3		%/V
	V_{IN} = 4.5V to 5.5V if V_{OUTNOM} ≥ 2.5V, I_{LOAD} = 20mA				
Output Voltage Load Regulation	20mA < I_{LOAD} < 500mA, V_{IN} = 3.6V if V_{OUTNOM} < 2.5V		0.3		%
	20mA < I_{LOAD} < 500mA, V_{IN} = 5.0V if V_{OUTNOM} ≥ 2.5V				
	20mA < I_{LOAD} < 1A, V_{IN} = 3.6V if V_{OUTNOM} < 2.5V		0.7		%
	20mA < I_{LOAD} < 1A, V_{IN} = 5.0V if V_{OUTNOM} ≥ 2.5V				
PWM Switch ON-Resistance	I_{SW} = 100mA PMOS I_{SW} = –100mA NMOS		0.075 0.055		Ω
Switching Frequency	I_{OUT} = 300mA		4		MHz
Maximum Duty Cycle[7, 8]		80	85		%
Soft Start Time	V_{OUT} = 90%, C_{SS} = 2.2nF		1.26		ms

Notes:

3. Exceeding the absolute maximum rating may damage the device.
4. The device is not guaranteed to function outside its operating rating.
5. Devices are ESD sensitive. Handling precautions recommended. Human body model, 1.5kΩ in series with 100pF.
6. Specification for packaged product only.
7. The maximum duty cycle is limited by the fixed mandatory off time of 300ns.
8. Guaranteed by design.

Electrical Characteristics[6] (Continued)

T_A = 25°C; V_{IN} = V_{EN} = 3.6V; V_{OUT}=1.8V; L = 0.33µH; C_{OUT} = 44µF unless otherwise specified.
Bold values indicate –40°C ≤ T_J ≤ +125°C, unless noted.

Parameter	Condition	Min.	Typ.	Max.	Units
Power Good Threshold (Rising)	Moving FB from Low to High relative to 0.62V (V_{FB})	**85**	90	**95**	%
Power Good Threshold Hysteresis	Moving FB from High to Low relative to 0.62V (V_{FB})		20		%
Power Good Delay Time	Rising			160	µs
Power Good Pull-Down	RPG = 5.1k from PG to VOUT			200	mV
Enable Threshold	The voltage on Enable that ensures the part is ON	**0.4**	0.9	**1.2**	V
Enable Input Current			0.1	**2**	µA
Overtemperature Shutdown			160		°C
Overtemperature Shutdown Hysteresis			20		°C

Typical Characteristics

Efficiency vs. Load 1.8 VOUT

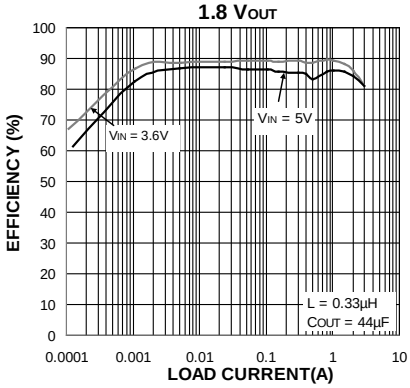

Efficiency vs. Load 1.2 VOUT

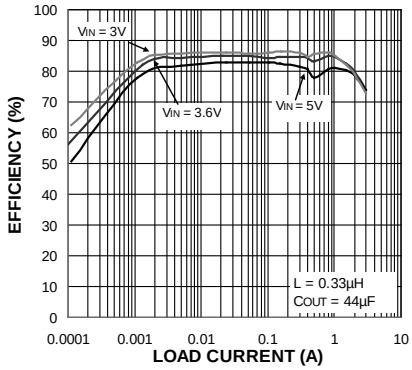

VOUT Rise Time vs Css

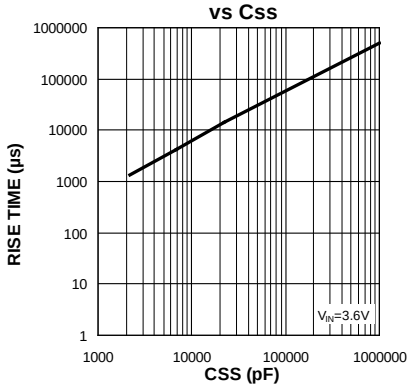

Current Limit vs. Input Voltage

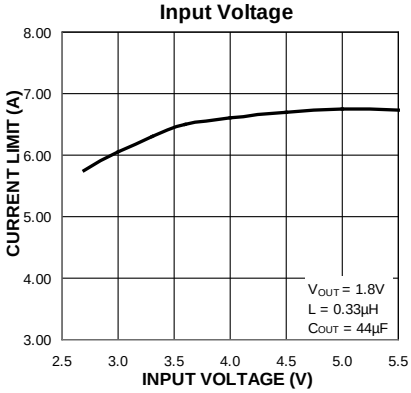

Quiscent Current vs. Input Voltage

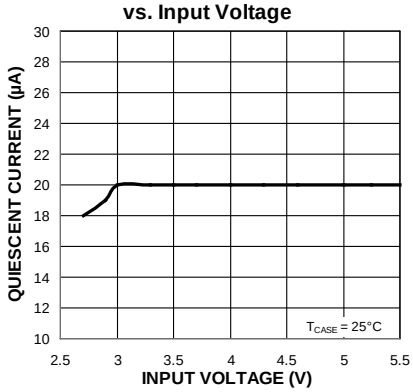

Output Voltage vs. Input Voltage

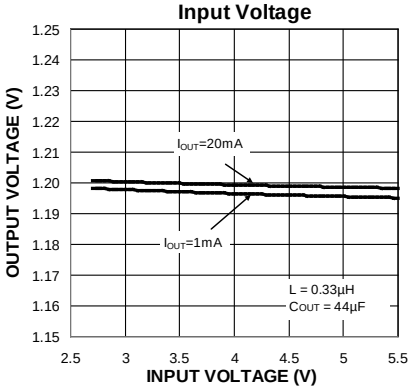

Output Voltage vs. Input Voltage

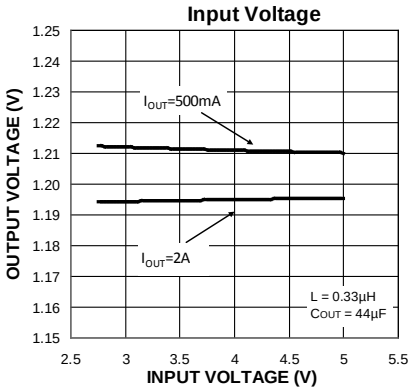

Output Voltage (HLL) vs. Load Current

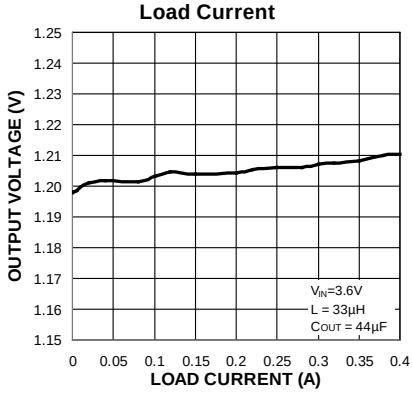

Output Voltage (CCM) vs. Load Current

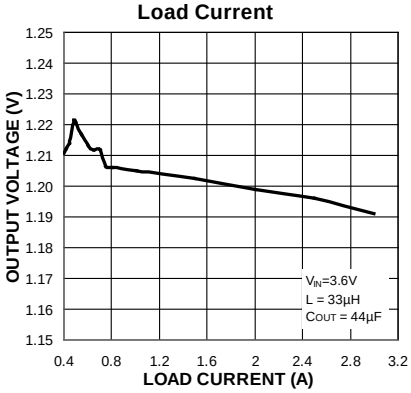

Typical Characteristics (Continued)

Output Voltage vs. Temperature

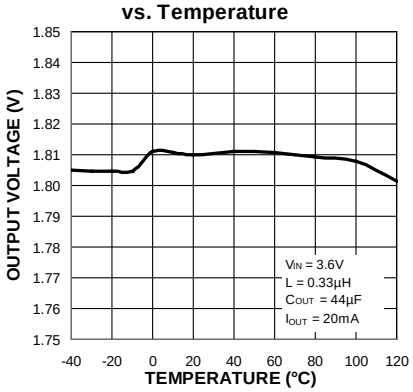

PG Delay Time vs. Input Voltage

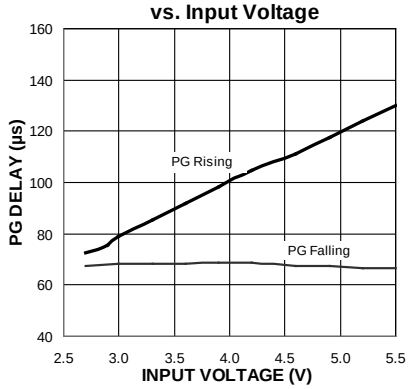

PG Thresholds vs. Input Voltage

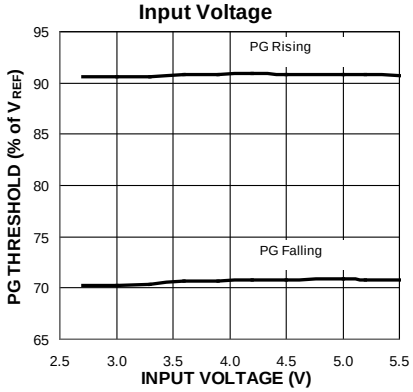

Undervoltage Lockout vs. Temperature

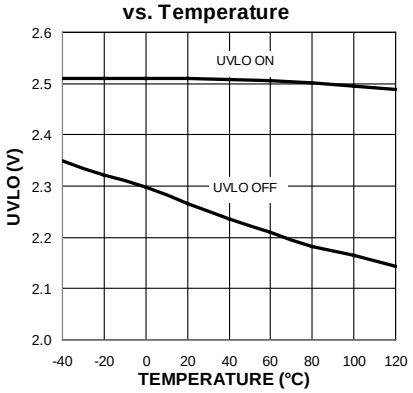

Enable Threshold vs. Input Voltage

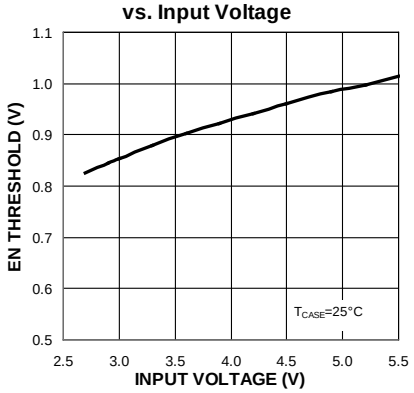

Enable Thresholds vs. Temperature

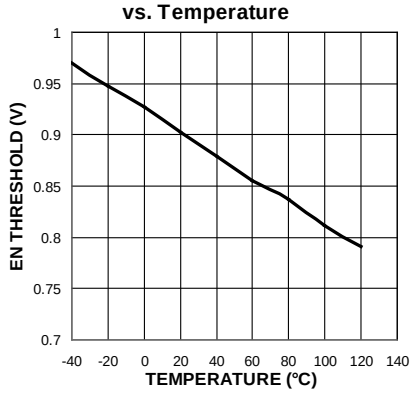

Feedback Voltage vs. Temperature

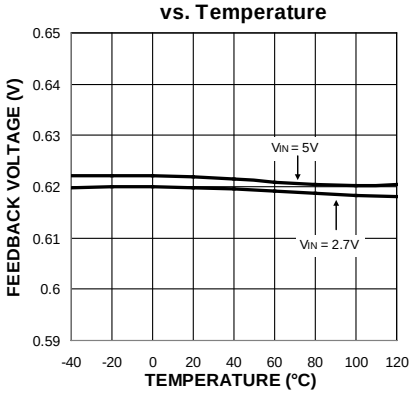

Shutdown Current vs. Temperature

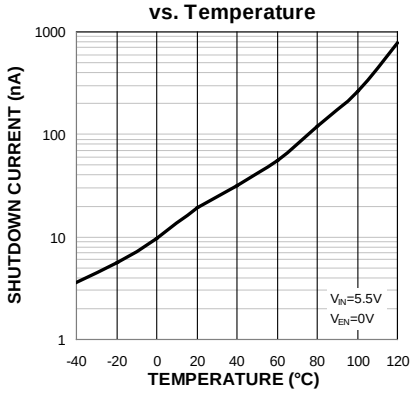

Switching Frequency vs. Load Current

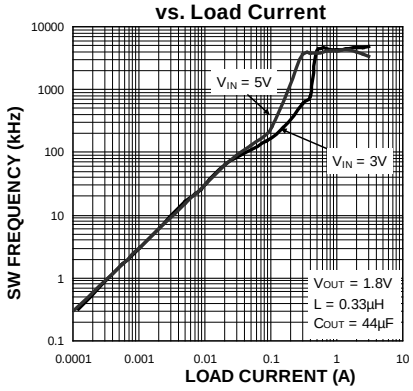

Functional Characteristics

Switching Waveform
Discontinuous Mode (1mA)

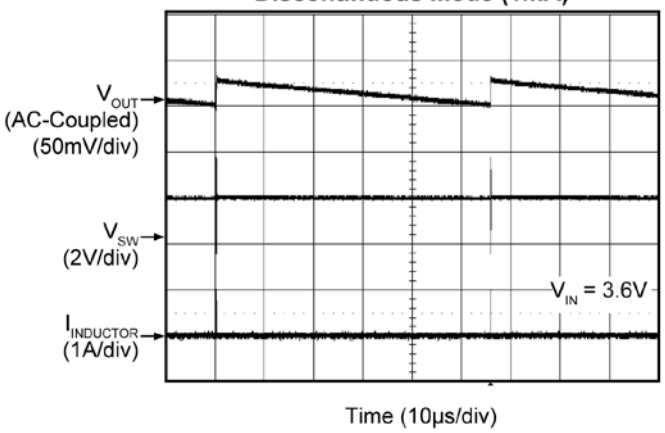

Switching Waveform
Discontinuous Mode (10mA)

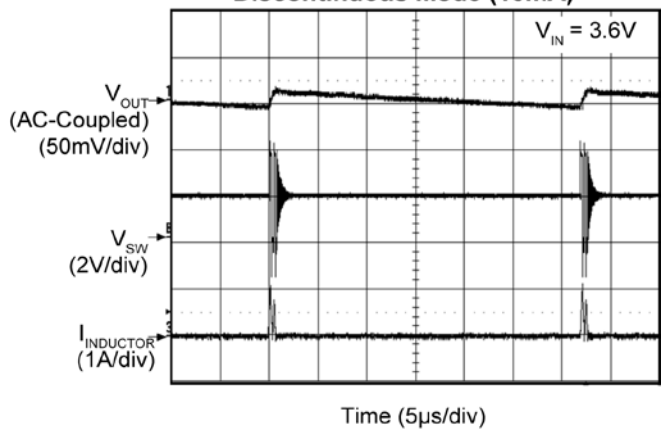

Switching Waveform
Discontinuous Mode (50mA)

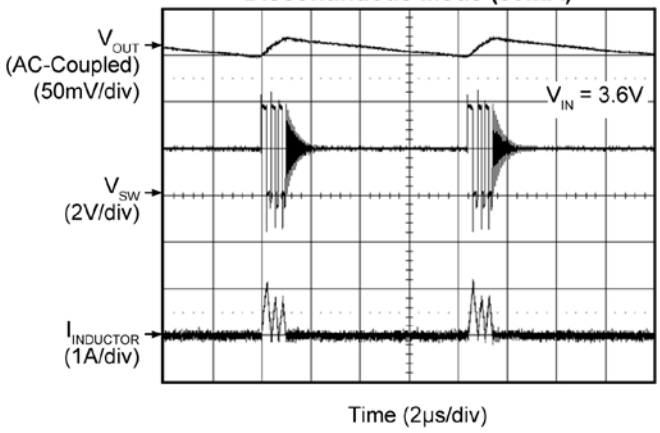

Switching Waveform
Continuous Mode (500mA)

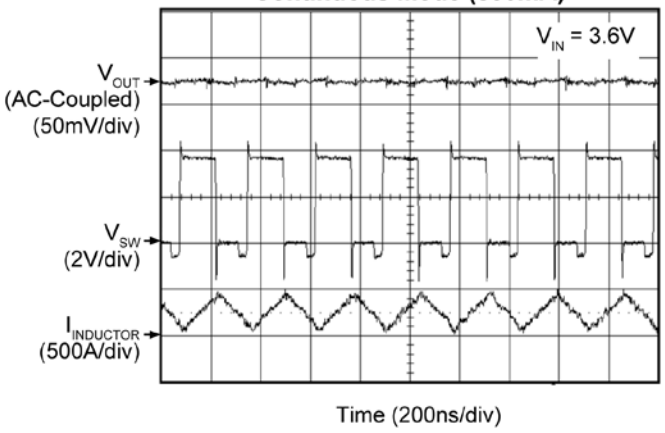

Switching Waveform
Continuous Mode (800mA)

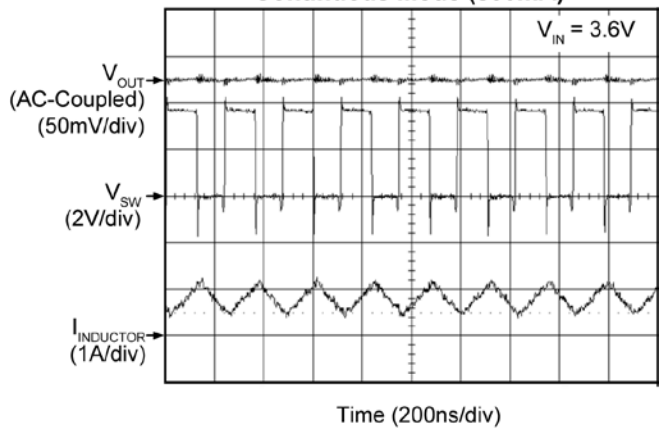

Switching Waveform
Continuous Mode (1.5A)

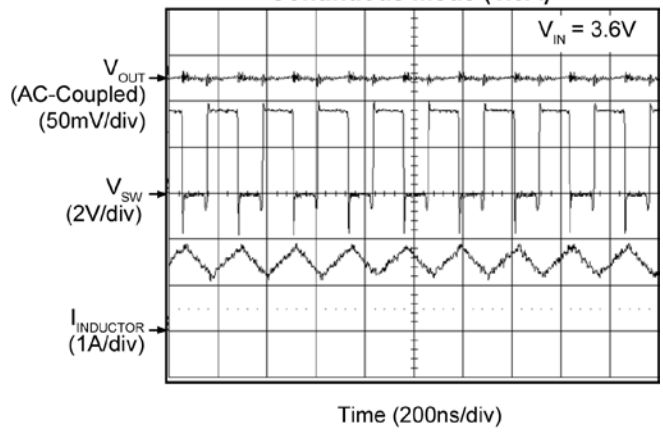

Functional Characteristics (Continued)

Load Transient (10mA to 200mA)

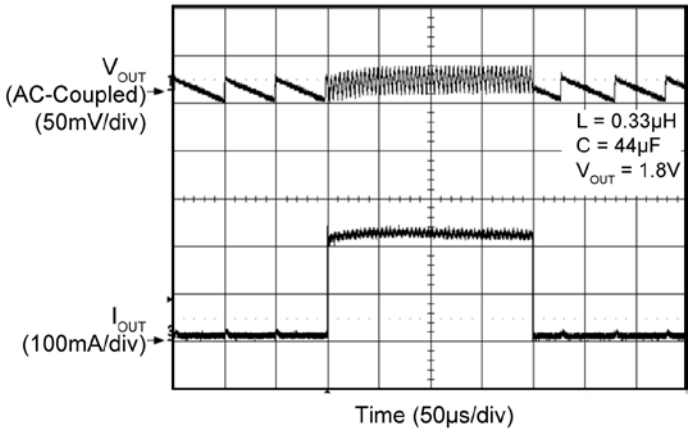

Load Transient (10mA to 500mA)

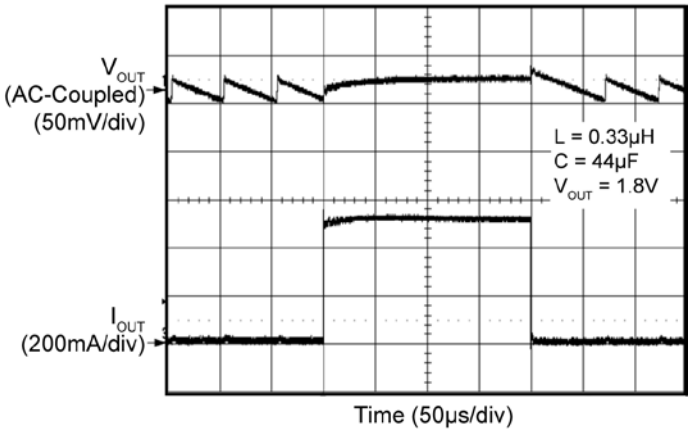

Load Transient (50mA to 1A)

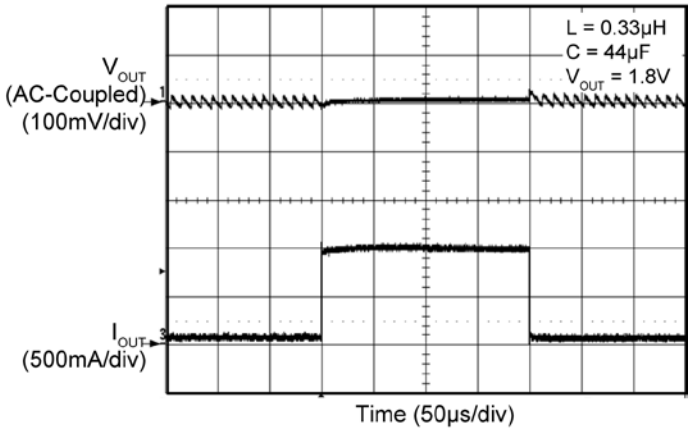

Load Transient (50mA to 1.5A)

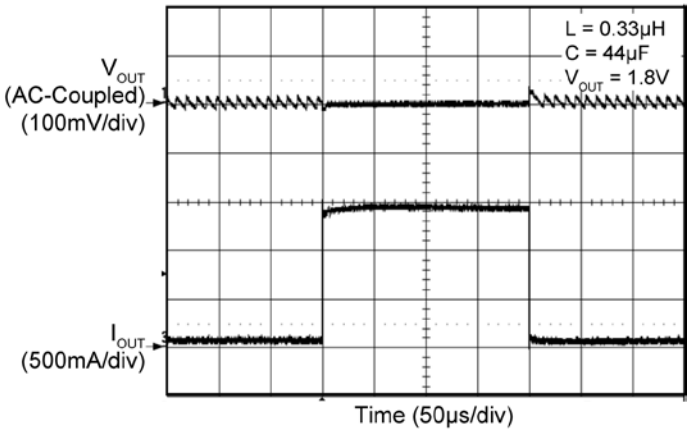

Load Transient (200mA to 600mA)

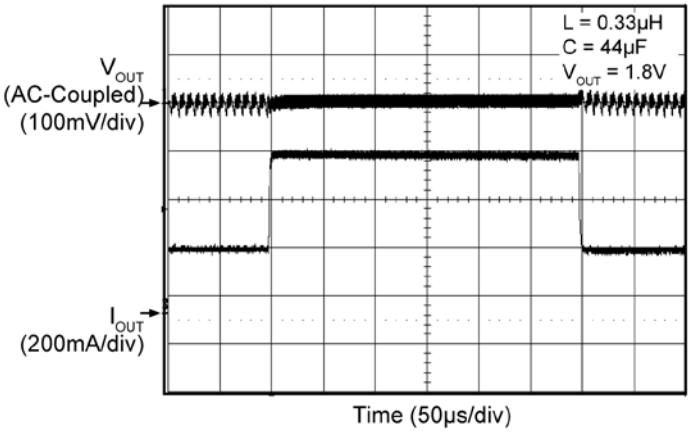

Load Transient (200mA to 1A)

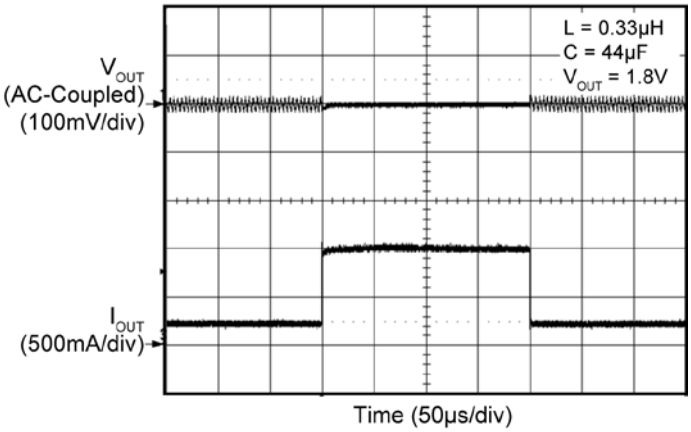

Functional Characteristics (Continued)

Load Transient (200mA to 2A)

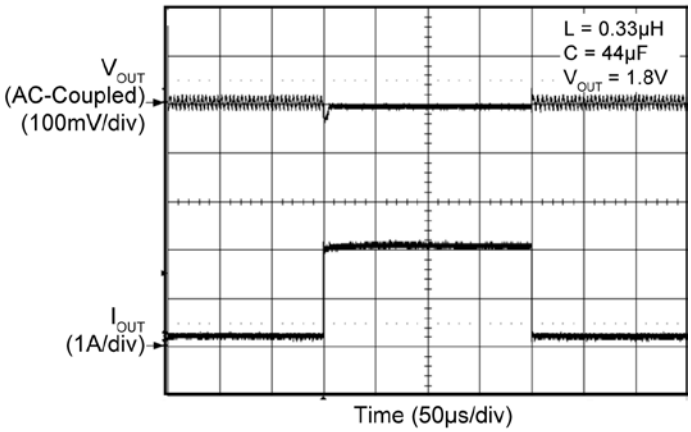

Load Transient (200mA to 3A)

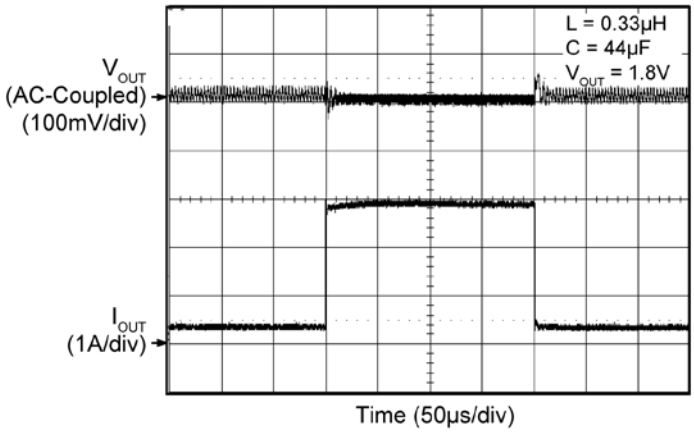

Line Transient (3.6V to 5.5V@1.5A Load)

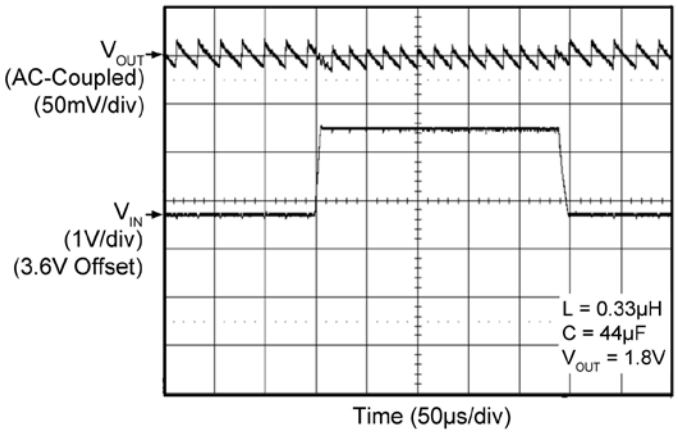

Line Transient (3.6V to 5.5V @ 20mA Load)

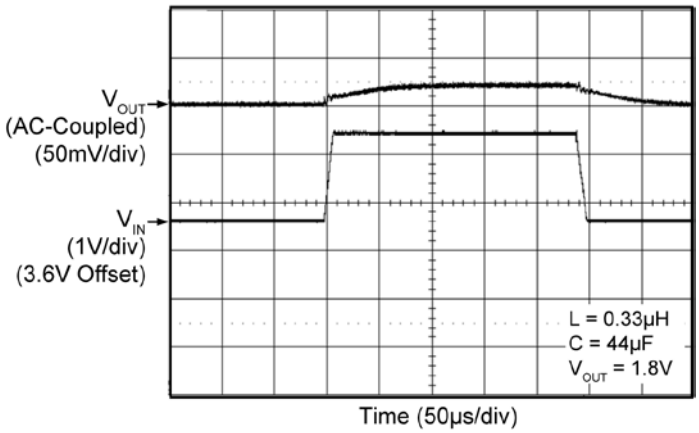

Start-Up PGOOD

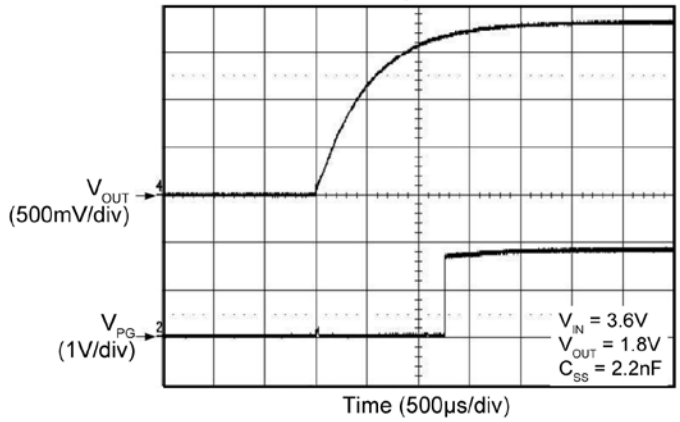

Functional Diagram

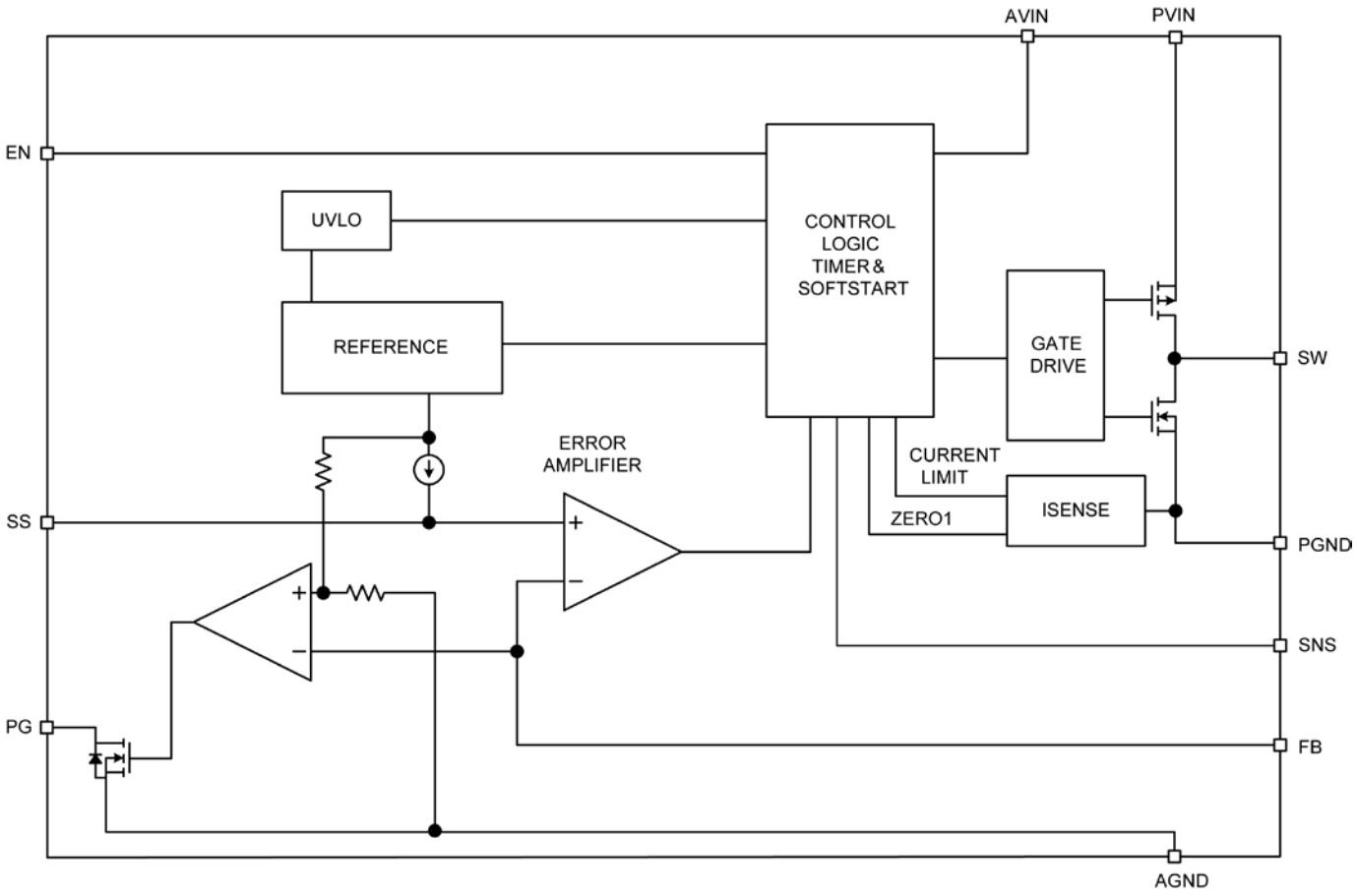

Figure 1. Simplified MIC23303 Functional Block Diagram

Functional Description

PVIN

The input supply (PVIN) provides power to the internal MOSFETs for the switch mode regulator section. The VIN operating range is 2.7V to 5.5V so an input capacitor, with a minimum voltage rating of 6.3V, is recommended. Due to the high switching speed, a minimum 4.7µF bypass capacitor placed close to PVIN and the power ground (PGND) pin is required. Refer to the PCB Layout Recommendations for details.

AVIN

Analog VIN (AVIN) provides power to the internal control and analog supply circuitry. AVIN and PVIN must be tied together. Careful layout should be considered to ensure high frequency switching noise caused by PVIN is reduced before reaching AVIN. A 1µF capacitor as close to AVIN as possible is recommended. See PCB Layout Recommendations for details.

EN

A logic high signal on the enable pin activates the output voltage of the device. A logic low signal on the enable pin deactivates the output and reduces supply current to nominal 0.01µA. MIC23303 features external soft-start circuitry via the soft start (SS) pin that reduces in-rush current and prevents the output voltage from overshooting when EN is driven logic high. Do not leave the EN pin floating.

SW

The switch (SW) connects directly to one end of the inductor and provides the current path during switching cycles. The other end of the inductor is connected to the load, SNS pin, and output capacitor. Due to the high speed switching on this pin, the switch node should be routed away from sensitive nodes whenever possible.

SNS

The sense (SNS) pin is connected to the output of the device to provide feedback to the control circuitry. The SNS connection should be placed close to the output capacitor. Refer to the PCB Layout Recommendations for more details.

AGND

The analog ground (AGND) is the ground path for the biasing and control circuitry. The current loop for the signal ground should be separate from the power ground (PGND) loop. Refer to the PCB Layout Recommendations for more details.

PGND

The power ground pin is the ground path for the high current in PWM mode. The current loop for the power ground should be as small as possible and separate from the analog ground (AGND) loop as applicable. Refer to the PCB Layout Recommendations for more details.

PG

The power good (PG) pin is an open-drain output that indicates logic high when the output voltage is typically above 90% of its steady state voltage. A pull-up resistor of more than 5kΩ should be connected from PG to V_{OUT}.

SS

The soft start (SS) pin is used to control the output voltage ramp-up time. The approximate equation for the ramp time in seconds is $250 \times 10^3 \times \ln(10) \times C_{SS}$.

For example, for C_{SS} = 2.2nF, T_{rise} ~ 1.26ms. See the Typical Characteristics curve for a graphical guide. The minimum recommended value for C_{SS} is 2.2nF.

FB

The feedback (FB) pin is provided for the adjustable voltage option (no internal connection for fixed options). This is the control input for programming the output voltage. A resistor divider network is connected to this pin from the output and is compared to the internal 0.62V reference within the regulation loop.

The output voltage can be programmed between 0.65V and 3.6V using the following equation:

$$V_{OUT} = V_{REF} \cdot \left(1 + \frac{R3}{R4}\right)$$

Where: R3 is the top resistor, R4 is the bottom resistor.

Example feedback resistor values:

V_{OUT}	R3	R4
1.2V	274k	294k
1.5V	316k	221k
1.8V	560k	294k
2.5V	324k	107k
3.3V	464k	107k

Application Information

The MIC23303 is a high-performance DC-to-DC step down regulator offering a small solution size. Supporting an output current up to 3A inside a tiny 3mm x 3mm DFN package, the IC requires only six external components while meeting today's miniature portable electronic device needs. Using the HyperLight Load switching scheme, the MIC23303 is able to maintain high efficiency throughout the entire load range while providing ultra-fast load transient response. The following sections provide additional device application information.

Input Capacitor

A 4.7µF ceramic capacitor or greater should be placed close to the PVIN pin and PGND pin for bypassing. A Murata GRM188R60J475ME19D, size 0603, 4.7µF ceramic capacitor is recommended based upon performance, size, and cost. A X5R or X7R temperature rating is recommended for the input capacitor. Y5V temperature rating capacitors, aside from losing most of their capacitance over temperature, can also become resistive at high frequencies. This reduces their ability to filter out high frequency noise.

Output Capacitor

The MIC23303 is designed for use with a 10µF or greater ceramic output capacitor. Increasing the output capacitance will lower output ripple and improve load transient response but could also increase solution size or cost. A low equivalent series resistance (ESR) ceramic output capacitor such as the Murata GRM21BR60J226ME39L, size 0805, 22µF ceramic capacitor is recommended based upon performance, size and cost. Two of these capacitors in parallel will decrease ESR, resulting in decreased output voltage ripple. Both the X7R or X5R temperature rating capacitors are recommended. The Y5V and Z5U temperature rating capacitors are not recommended due to their wide variation in capacitance over temperature and increased resistance at high frequencies.

Inductor Selection

When selecting an inductor, it is important to consider the following factors (not necessarily in the order of importance):

- Inductance
- Rated current value
- Size requirements
- DC resistance (DCR)

The MIC23303 is designed for use with a 0.33µH to 1.0µH inductor. For faster transient response and greater efficiency, a 0.33µH inductor will yield the best result. To achieve lower output voltage ripple, a higher value inductor such as a 1µH can be used. However, a greater value inductor, when operating in low load mode will result in a higher operating frequency. This effect with increased DCR will result in a less efficient design.

Maximum current ratings of the inductor are generally given in two methods; permissible DC current and saturation current. Permissible DC current can be rated either for a 40°C temperature rise or a 10% to 20% loss in inductance. Ensure that the inductor selected can handle the maximum operating current. When saturation current is specified, make sure that there are enough margins that the peak current does not cause the inductor to saturate. Peak current can be calculated as follows:

$$I_{PEAK} = \left[I_{OUT} + V_{OUT} \left(\frac{1 - V_{OUT}/V_{IN}}{2 \times f \times L} \right) \right]$$

As shown by the calculation above, the peak inductor current is inversely proportional to the switching frequency and the inductance; the lower the switching frequency or the inductance the higher the peak current. As input voltage increases, the peak current is somewhat limited by constant off time control.

The size of the inductor depends on the requirements of the application. Refer to the Typical Application Schematic and Bill of Materials for details.

DC resistance (DCR) is also important. While DCR is inversely proportional to size, DCR can represent a significant efficiency loss. Refer to the Efficiency Considerations. The transition between high loads (CCM) to HyperLight Load (HLL) mode is determined by the inductor ripple current and the load current.

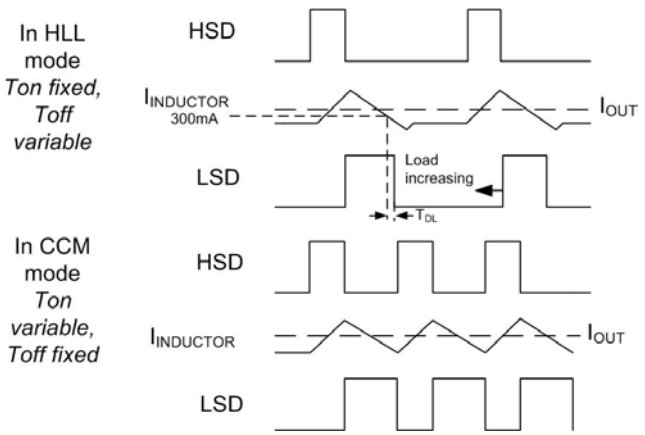

Figure 2. HyperLight Load (HLL) and Continuous Conduction Mode (CCM) Switching Diagram

Figure 2 shows the signals for high-side switch drive (HSD) for Ton control, the inductor current and the low-side switch drive (LSD) for Toff control.

In HLL mode, the inductor is charged with a fixed Ton pulse on the high-side switch (HSD). After this, the LSD is switched on and current falls at a rate V_{OUT}/L. The controller remains in HLL mode while the inductor falling current is detected to cross approximately 300mA. When the LSD (or Toff) time reaches its minimum and the inductor falling current is no longer able to reach this 300mA threshold, the part is in CCM mode and switching at a virtually constant frequency.

Compensation

The MIC23303 is designed to be stable with a 0.33µH to 1.0µH inductor with a minimum 10µF ceramic (X5R) output capacitor. The total feedback resistance should be kept around 500kΩ to reduce the I^2R losses through the feedback resistor network, improving efficiency. A feed-forward capacitor (CFF) of 33pF is recommended across the top feedback resistor to reduce the effects of parasitic capacitance and improve transient performance.

Duty Cycle

The typical maximum duty cycle of the MIC23303 is 85%.

Efficiency Considerations

Efficiency is defined as the amount of useful output power, divided by the amount of power supplied.

$$\text{Efficiency } \% = \left(\frac{V_{OUT} \times I_{OUT}}{V_{IN} \times I_{IN}} \right) \times 100$$

Maintaining high efficiency serves two purposes. It reduces power dissipation in the power supply, reducing the need for heat sinks and thermal design considerations, and it reduces consumption of current for battery-powered applications. Reduced current draw from a battery increases the devices operating time and is critical in handheld devices.

There are two types of losses in switching converters; DC losses and switching losses. DC losses are simply the power dissipation of I^2R. Power is dissipated in the high-side switch during the on cycle. Power loss is equal to the high side MOSFET R_{DSON} multiplied by the switch current squared. During the off cycle, the low side N-channel MOSFET conducts, also dissipating power. Device operating current also reduces efficiency. The product of the quiescent (operating) current and the supply voltage represents another DC loss.

The current required to drive the gates on and off at a constant 4MHz frequency and the switching transitions make up the switching losses.

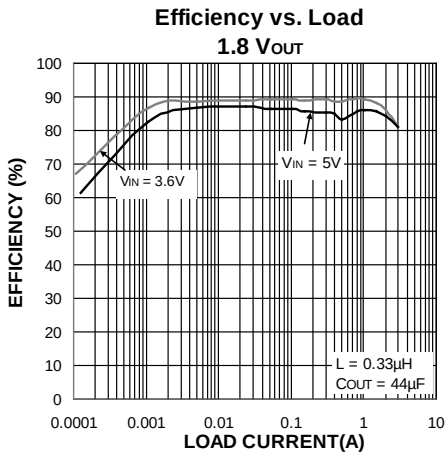

Figure 3. Efficiency under Load

Figure 3 shows an efficiency curve. From no load to 100mA, efficiency losses are dominated by quiescent current losses, gate drive, and transition losses. By using HyperLight Load mode, the MIC23303 is able to maintain high efficiency at low output currents.

Over 300mA, efficiency loss is dominated by MOSFET R_{DSON} and inductor losses. Higher input supply voltages will increase the Gate-to-Source voltage on the internal MOSFETs, thereby reducing the internal R_{DSON}. This improves efficiency by reducing DC losses in the device. All but the inductor losses are inherent to the device. When dealing with inductor losses, inductor selection becomes increasingly critical in efficiency calculations.

As the inductors are reduced in size, the DC resistance (DCR) can become quite significant. The DCR losses can be calculated as follows:

$$P_{DCR} = I_{OUT}^2 \times DCR$$

From that, the loss in efficiency due to inductor resistance can be calculated as follows:

$$\text{Efficiency Loss} = \left[1 - \left(\frac{V_{OUT} \times I_{OUT}}{V_{OUT} \times I_{OUT} + P_{DCR}}\right)\right] \times 100$$

Efficiency loss due to DCR is minimal at light loads and gains significance as the load is increased. Inductor selection becomes a trade-off between efficiency and size in this case.

HyperLight Load Mode

MIC23303 uses a minimum on and off time proprietary control loop (patented by Micrel). When the output voltage falls below the regulation threshold, the error comparator begins a switching cycle that turns the PMOS on and keeps it on for the duration of the minimum-on-time. This increases the output voltage. If the output voltage is over the regulation threshold, then the error comparator turns the PMOS off for a minimum-off-time until the output drops below the threshold. The NMOS acts as an ideal rectifier that conducts when the PMOS is off. Using a NMOS switch instead of a diode allows for lower voltage drop across the switching device when it is on. The asynchronous switching combination between the PMOS and the NMOS allows the control loop to work in discontinuous mode for light load operations. In discontinuous mode, the MIC23303 works in pulse frequency modulation (PFM) to regulate the output. As the output current increases, the off-time decreases, thus provides more energy to the output. This switching scheme improves the efficiency of MIC23303 during light load currents by only switching when it is needed. As the load current increases, the MIC23303 goes into continuous conduction mode (CCM) and switches at a frequency centered at 4MHz. The equation to calculate the load when the MIC23303 goes into continuous conduction mode may be approximated by the following formula:

$$I_{LOAD} > \left(\frac{(V_{IN} - V_{OUT}) \times D \times \eta}{2L \times f}\right)$$

As shown in the previous equation, the load at which the MIC23303 transitions from HyperLight Load mode to PWM mode is a function of the input voltage (V_{IN}), output voltage (V_{OUT}), duty cycle (D), efficiency (η), inductance (L) and frequency (f). As shown in Figure 4, as the output current increases, the switching frequency also increases until the MIC23303 goes from HyperLight Load mode to PWM mode at approximately 300mA. The MIC23303 will switch at a relatively constant frequency around 4MHz once the output current is over 300mA.

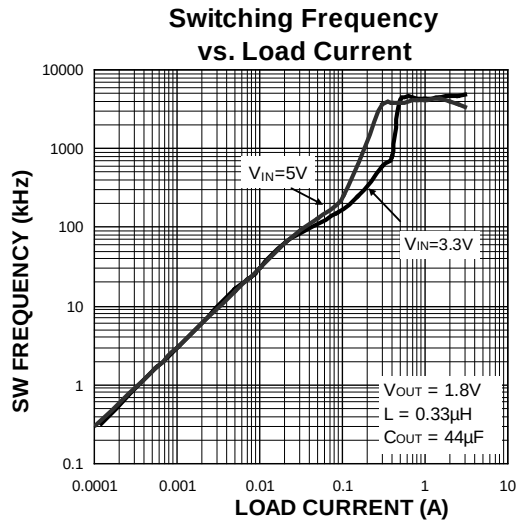

Figure 4. SW Frequency vs. Output Current

Power Dissipation Considerations

As with all power devices, the ultimate current rating of the output is limited by the thermal properties of the package and the PCB it is mounted on. There is a simple, Ohm's law type relationship between thermal resistance, power dissipation and temperature which are analogous to an electrical circuit:

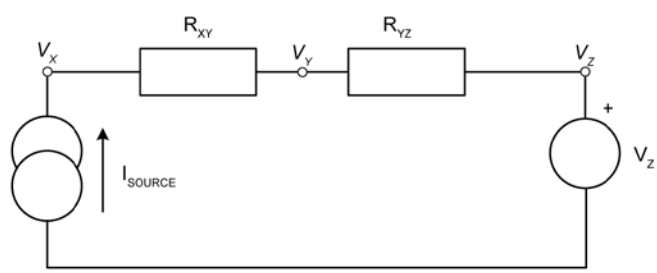

Figure 5. Ohm's Law Description

From this simple circuit we can calculate V_X if we know I_{SOURCE}, V_Z, and the resistor values, R_{XY} and R_{YZ}, using the equation:

$$V_X = I_{SOURCE} \times (R_{XY} + R_{YZ}) + V_Z$$

Thermal circuits can be considered using these same rules and can be drawn similarly replacing current sources with power dissipation (in Watts), resistance with thermal resistance (in °C/W) and voltage sources with temperature (in °C).

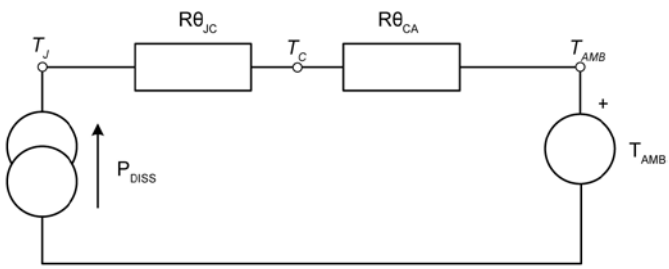

Figure 6. Thermal Circuit Description

Now replacing the variables in the equation for V_X, we can find the junction temperature (T_J) from power dissipation, ambient temperature, and the known thermal resistance of the PCB ($R\theta_{CA}$) and the package ($R\theta_{JC}$).

$$T_J = P_{DISS} \times (R\theta_{JC} + R\theta_{CA}) + T_{AMB}$$

As can be seen in the diagram, total thermal resistance $R\theta_{JA} = R\theta_{JC} + R\theta_{CA}$. Hence this can also be written:

$$T_J = P_{DISS} \times (R\theta_{JA}) + T_{AMB}$$

Since effectively all of the power losses (minus the inductor losses) in the converter are dissipated within the MIC23303 package, P_{DISS} can be calculated thus:

$$P_{DISS} = \left[P_{OUT} \times \left(\frac{1}{\eta} - 1\right) \right] - I_{OUT}^{2} \times DCR$$

Where:

η = Efficiency taken from efficiency curves and DCR = Inductor DCR.

$R\theta_{JC}$ and $R\theta_{JA}$ are found in the Operating Ratings section of the datasheet. Where the reel board area differs from 1in square, $R\theta_{CA}$ (the PCB thermal resistance) values for various PCB copper areas can be taken from Figure 7 below. This graph is taken from *Designing with Low Dropout Voltage Regulators*, which is available from the Micrel website (LDO Application Hints).

Example:

A MIC23303 is intended to drive a 2A load at 1.8V and is placed on a printed circuit board which has a ground plane area of at least 25mm square.

The voltage source is a Li-ion battery with a lower operating threshold of 3V and the ambient temperature of the assembly can be up to 50°C.

Summary of variables:

I_{OUT} = 2A

V_{OUT} = 1.8V

V_{IN} = 3V to 4.2V

T_{AMB} = 50°C

$R\theta_{JA}$ = 61°C/W from datasheet

η *@ 2A* = 85% (worst case @ 5V from Figure 3)

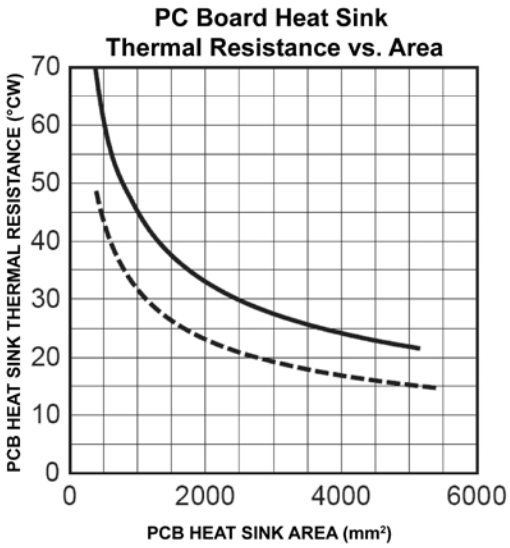

Figure 7. PCB Thermal Resistance versus PCB Copper Area

$$P_{DISS} = \left[1.8 \times 2 \times \left(\frac{1}{0.85} - 1\right)\right] - \left(2^2 \times 20m\Omega\right) = 0.56W$$

The worst case switch and inductor resistance will increase at higher temperatures, so a margin of 20% can be added to account for this.

$$P_{DISS} = 0.56 \times 1.2 = 0.67W$$

Therefore:

T_J = 0.67W. (61°C/W) + 50°C

T_J = 91°C

This is well below the maximum 125°C.

Typical Application Schematic

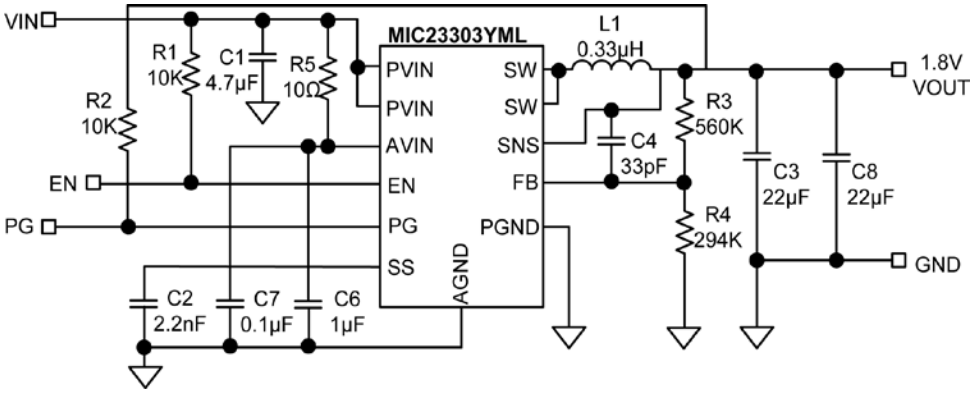

Bill of Materials

Item	Part Number	Manufacturer	Description	Qty.
C1	06036D475KAT2A	AVX[9]	4.7µF/6.3V, X5R, 0603	1
	GRM188R60J475ME19D	Murata[10]		
	C1608X5R0J475M	TDK[11]		
C2	06035C222KAT2A	AVX	2.2nF/50V, X7R, 0603	1
	GRM188R71H222MA01D	Murata		
	C1608X7R1H222K	TDK		
C3, C8	08056D226MAT2A	AVX	22µF/6.3V, X5R, 0805	1
	GRM21BR60J226ME39L	Murata		
	C2012X5R0J226M	TDK		

Notes:

9. AVX: www.avx.com .
10. Murata: www.murata.com.
11. TDK: www.tdk.com.

Bill of Materials (Continued)

Item	Part Number	Manufacturer	Description	Qty.
C4	06035A330KAT2A	AVX	33pF/50V, 0603	1
	GRM1885C1H330JA01D	Murata		
C6	06036D105KAT2A	AVX	1µF/6.3V, X5R, 0603	1
	GRM188R60J105KA01D	Murata		
	C1608X5R0J105K	TDK		
C7	06035D104KAT2A	AVX	0.1µF/6.3V, X5R, 0603	1
	GRM188R71H104KA930	Murata		
	C1608X5R1H104K	TDK		
L1	0520CDMCDSNP-R33MC	Sumida[12]	0.33µH/5.6A, 8mΩ	1
	744373240033	Wurth[13]	0.33µH/8.0A, 8.6mΩ	
R1, R2	CRCW060310K0FKEA	Vishay/Dale[14]	10K,1%, 1/10W, 0603	2
R3	CRCW0603560KFKEA	Vishay/Dale	560K,1%, 1/10W, 0603	1
R4	CRCW0603294KFKEA	Vishay/Dale	294K,1%, 1/10W, 0603	1
R5	CRCW060310R0FKEA	Vishay/Dale	10Ω,1%, 1/10W, 0603	1
IC1	**MIC23303YML**	**Micrel, Inc**[15]	**4MHz 3A Buck Regulator with HyperLight Load Mode and Power Good**	**1**

Notes:

12. Sumida: www.Sumida.com.
13. Wurth: www.we-online.com.
14. Vishay: www.vishay.com.
15. **Micrel, Inc.: www.micrel.com**.

PCB Layout Recommendations

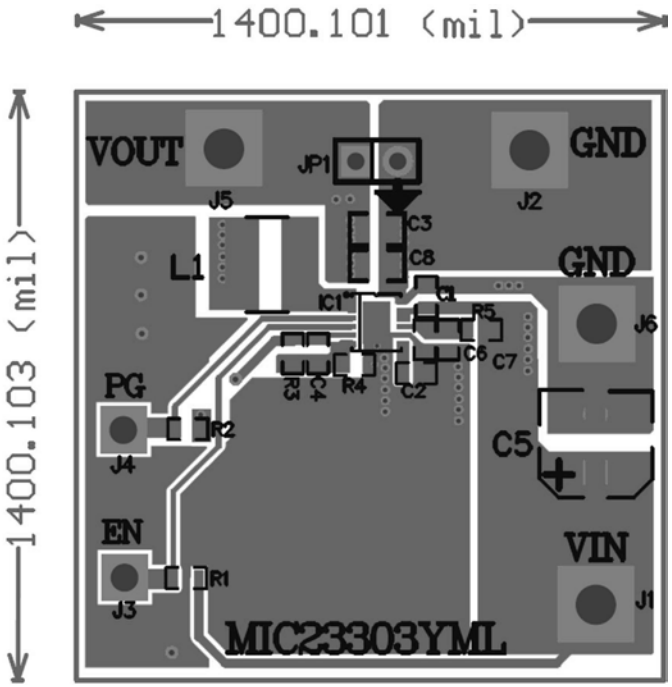

Top Layer

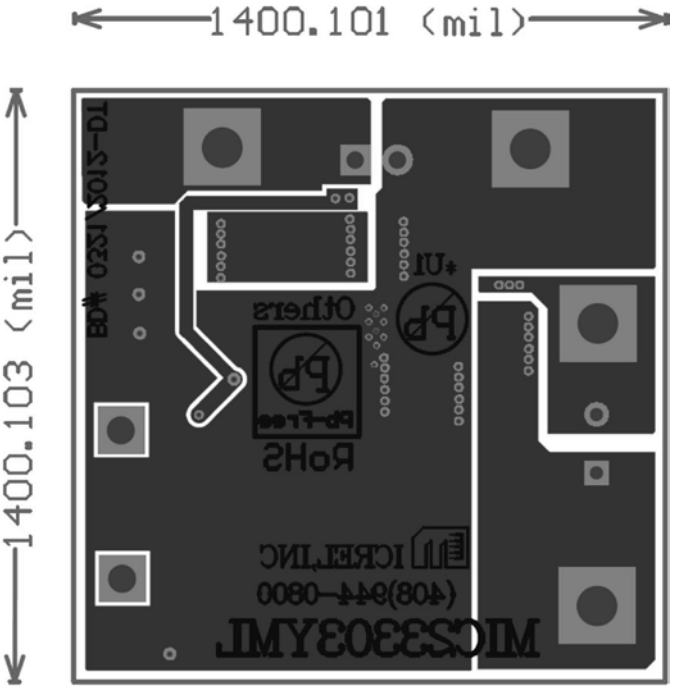

Bottom Layer

Package Information [16]

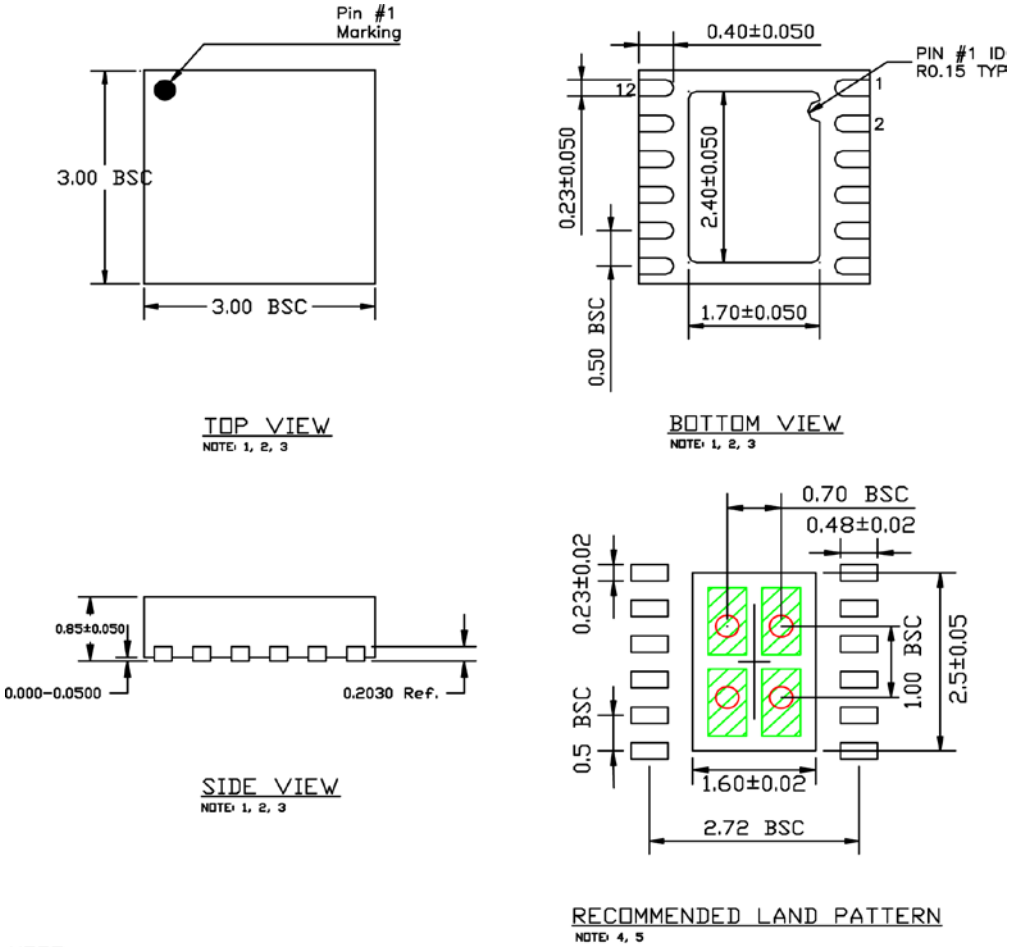

NOTE:
1. MAX PACKAGE WARPAGE IS 0.05 MM
2. MAX ALLOWABLE BURR IS 0.076MM IN ALL DIRECTIONS
3. PIN #1 IS ON TOP WILL BE LASER MARKED
4. RED CIRCLE IN LAND PATTERN INDICATE THERMAL VIA. SIZE SHOULD BE 0.30–0.3M IN DIAMETER AND SHOULD BE CONNECTED TO GND FOR MAX THERMAL PERFORMANCE
5. GREEN RECTANGLES (SHADED AREA) indicate SOLDER STENCIL OPENING ON EXPOSED PAD AREA. SIZE SHOULD BE 0.50x0.95 MM IN SIZE, 0.20 MM SPACING.

12-Pin 3mm x 3mm DFN (ML)

Note:

16. Package information is correct as of the publication date. For updates and most current information, go to www.micrel.com.

MICREL, INC. 2180 FORTUNE DRIVE SAN JOSE, CA 95131 USA
TEL +1 (408) 944-0800 FAX +1 (408) 474-1000 WEB http://www.micrel.com

Micrel makes no representations or warranties with respect to the accuracy or completeness of the information furnished in this data sheet. This information is not intended as a warranty and Micrel does not assume responsibility for its use. Micrel reserves the right to change circuitry, specifications and descriptions at any time without notice. No license, whether express, implied, arising by estoppel or otherwise, to any intellectual property rights is granted by this document. Except as provided in Micrel's terms and conditions of sale for such products, Micrel assumes no liability whatsoever, and Micrel disclaims any express or implied warranty relating to the sale and/or use of Micrel products including liability or warranties relating to fitness for a particular purpose, merchantability, or infringement of any patent, copyright or other intellectual property right.

Micrel Products are not designed or authorized for use as components in life support appliances, devices or systems where malfunction of a product can reasonably be expected to result in personal injury. Life support devices or systems are devices or systems that (a) are intended for surgical implant into the body or (b) support or sustain life, and whose failure to perform can be reasonably expected to result in a significant injury to the user. A Purchaser's use or sale of Micrel Products for use in life support appliances, devices or systems is a Purchaser's own risk and Purchaser agrees to fully indemnify Micrel for any damages resulting from such use or sale.

© 2002 Micrel, Incorporated.