PART NO.	A22041-001	REV	ECO	DATE	APP
		B	96708	05-06-10	TLM

MATERIALS & SPECIFICATIONS

INSULATOR:
LIQUID CRYSTAL POLYMER (LCP) PER ASTM D5138.

CONTACT:
COPPER ALLOY PER MIL-DTL-83513. GOLD PLATED PER ASTM B488, (HARD GOLD) TYPE II CODE C CLASS 1.27.

TERMINATION:
26 AWG (7-34) TYPE E, PER NEMA HP3, COLOR CODED PER TABLE.

LATCH BOX:
BERYLLIUM COPPER PER ASTM B194 NICKEL PLATE PER AMS-C-26074.

CURRENT CAPACITY:
3 AMP MAX.

CONTACT RESISTANCE:
26 MILLIOHMS (65mV) MAX @ 2.5 AMPS.

PERFORMANCE:
PRODUCT FAMILY TESTED TO AND PASSED THE PERFORMANCE SPECIFICATIONS OF TABLE VII OF MIL-DTL-83513.

PIN #	COLOR	PIN#	COLOR
1	BLACK	9	GRAY
2	BROWN	10	WHITE
3	RED	11	WHT/BLK
4	ORANGE	12	WHT/BRN
5	YELLOW	13	WHT/RED
6	GREEN	14	WHT/ORN
7	BLUE	15	WHT/YEL
8	VIOLET	16	WHT/GRN

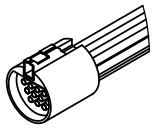

ACTUAL SIZE
EXCLUDING WIRE LENGTH

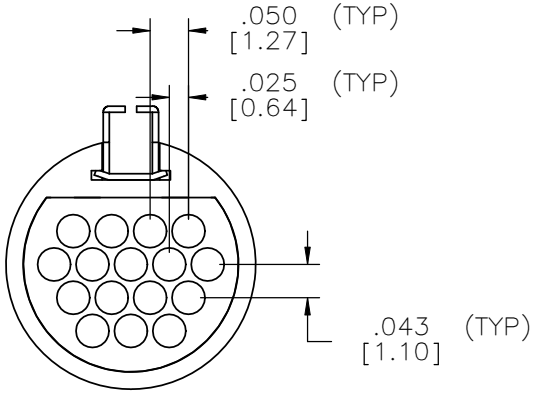

LOADING VIEW
LESS EPOXY

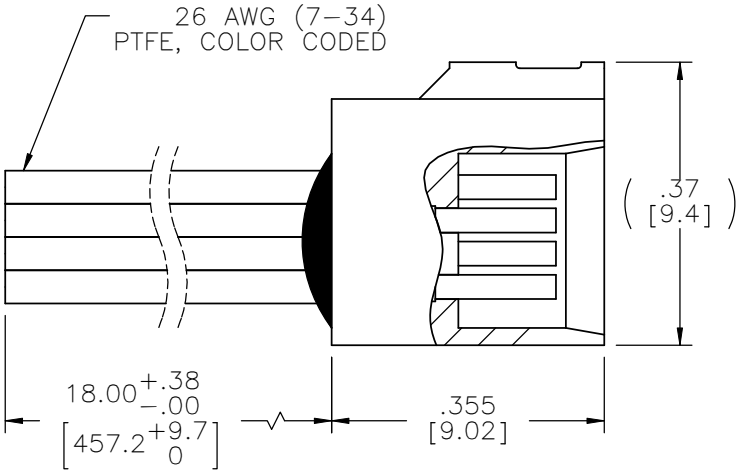

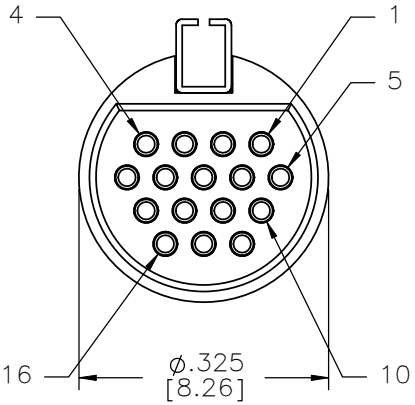

REF: OMNETICS

MCS / SLDW	THIRD ANGLE -TOLERANCES- UNLESS OTHERWISE NOTED DIMENSIONS IN INCHES 2 PL DEC± .01 3 PL DEC± .005 4 PL DEC± .0005 ANGLES ± 1°	THIS DRAWING CONTAINS CONFIDENTIAL AND PROPRIETARY INFORMATION WHICH IS THE PROPERTY OF OMNETICS CONNECTOR CORP. THIS DOCUMENT MAY NOT, IN WHOLE OR IN PART, BE DUPLICATED, OR DISCLOSED FOR ANY PURPOSE, WITHOUT WRITTEN PERMISSION FROM OMNETICS CONNECTOR CORP.	
		DFTM. TLM — DATE 04-11-08	TITLE: (16) SOCKET FEMALE MICRO CIRCULAR CONNECTOR W/ LATCH
		CHK'D. — DATE	
		APP'D. — DATE	

OMNETICS CONNECTOR CORPORATION
7260 COMMERCE CIRCLE EAST
MINNEAPOLIS, MN 55432
WWW.OMNETICS.COM

CAGE CODE 61873	
DWG NO. A22041-001	
SHEET 1 OF 1	REV B
SCALE: 4:1	