International
IOR Rectifier

IRF6722MPbF
IRF6722MTRPbF

DirectFET™ Power MOSFET ②

- RoHS Compliant Containing No Lead and Bromide ①
- Low Profile (<0.7 mm)
- Dual Sided Cooling Compatible ①
- Ultra Low Package Inductance
- Optimized for High Frequency Switching ①
- Ideal for CPU Core DC-DC Converters
- Optimized for Control FET application①
- Low Conduction and Switching Losses
- Compatible with existing Surface Mount Techniques ①
- 100% Rg tested

Typical values (unless otherwise specified)

V_{DSS}	V_{GS}	$R_{DS(on)}$	$R_{DS(on)}$
30V max	±20V max	4.7mΩ@ 10V	8.0mΩ@ 4.5V

$Q_{g\ tot}$	Q_{gd}	Q_{gs2}	Q_{rr}	Q_{oss}	$V_{gs(th)}$
11nC	4.3nC	1.2nC	26nC	11nC	1.8V

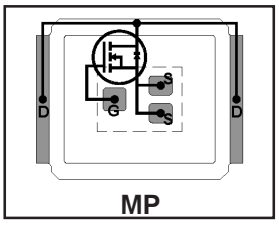

MP

DirectFET™ ISOMETRIC

Applicable DirectFET Outline and Substrate Outline (see p.7,8 for details)①

SQ	SX	ST		MQ	MX	MT	**MP**			

Description

The IRF6722MPbF combines the latest HEXFET® Power MOSFET Silicon technology with the advanced DirectFET™ packaging to achieve the lowest on-state resistance in a package that has the footprint of a MICRO-8 and only 0.7 mm profile. The DirectFET package is compatible with existing layout geometries used in power applications, PCB assembly equipment and vapor phase, infra-red or convection soldering techniques, when application note AN-1035 is followed regarding the manufacturing methods and processes. The DirectFET package allows dual sided cooling to maximize thermal transfer in power systems, improving previous best thermal resistance by 80%.

The IRF6722MPbF balances both low resistance and low charge along with ultra low package inductance to reduce both conduction and switching losses. The reduced total losses make this product ideal for high efficiency DC-DC converters that power the latest generation of processors operating at higher frequencies. The IRF6722MPbF has been optimized for parameters that are critical in synchronous buck operating from 12 volt bus converters including Rds(on) and gate charge to minimize losses.

Absolute Maximum Ratings

	Parameter	Max.	Units
V_{DS}	Drain-to-Source Voltage	30	V
V_{GS}	Gate-to-Source Voltage	±20	
I_D @ T_A = 25°C	Continuous Drain Current, V_{GS} @ 10V ③	13	A
I_D @ T_A = 70°C	Continuous Drain Current, V_{GS} @ 10V ③	11	
I_D @ T_C = 25°C	Continuous Drain Current, V_{GS} @ 10V ④	56	
I_{DM}	Pulsed Drain Current ⑤	110	
E_{AS}	Single Pulse Avalanche Energy ⑥	82	mJ
I_{AS}	Avalanche Current ⑤	11	A

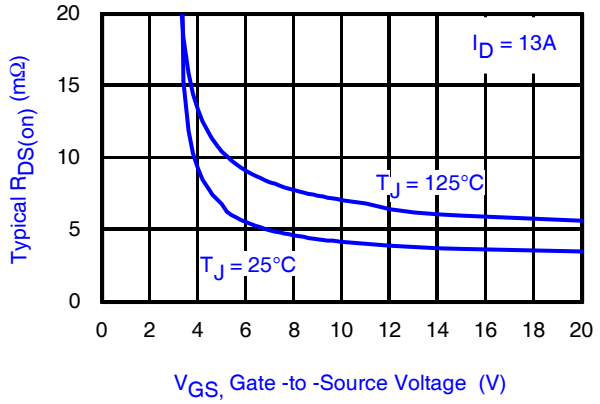

Fig 1. Typical On-Resistance vs. Gate Voltage

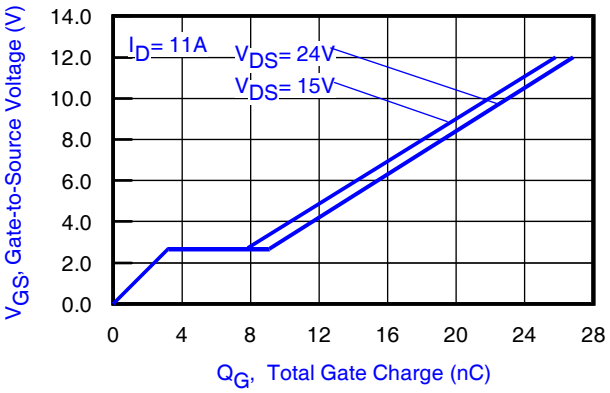

Fig 2. Typical Total Gate Charge vs. Gate-to-Source Voltage

Notes:

① Click on this section to link to the appropriate technical paper.
② Click on this section to link to the DirectFET Website.
③ Surface mounted on 1 in. square Cu board, steady state.
④ T_C measured with thermocouple mounted to top (Drain) of part.
⑤ Repetitive rating; pulse width limited by max. junction temperature.
⑥ Starting T_J = 25°C, L = 1.45mH, R_G = 25Ω, I_{AS} = 11A.

Static @ T_J = 25°C (unless otherwise specified)

	Parameter	Min.	Typ.	Max.	Units	Conditions
BV_{DSS}	Drain-to-Source Breakdown Voltage	30	—	—	V	V_{GS} = 0V, I_D = 250μA
$\Delta BV_{DSS}/\Delta T_J$	Breakdown Voltage Temp. Coefficient	—	23	—	mV/°C	Reference to 25°C, I_D = 1mA
$R_{DS(on)}$	Static Drain-to-Source On-Resistance	—	4.7	7.7	mΩ	V_{GS} = 10V, I_D = 13A ⑦
		—	8.0	10.8		V_{GS} = 4.5V, I_D = 11A ⑦
$V_{GS(th)}$	Gate Threshold Voltage	1.4	1.8	2.4	V	V_{DS} = V_{GS}, I_D = 50μA
$\Delta V_{GS(th)}/\Delta T_J$	Gate Threshold Voltage Coefficient	—	-5.9	—	mV/°C	
I_{DSS}	Drain-to-Source Leakage Current	—	—	1.0	μA	V_{DS} = 24V, V_{GS} = 0V
		—	—	150		V_{DS} = 24V, V_{GS} = 0V, T_J = 125°C
I_{GSS}	Gate-to-Source Forward Leakage	—	—	100	nA	V_{GS} = 20V
	Gate-to-Source Reverse Leakage	—	—	-100		V_{GS} = -20V
gfs	Forward Transconductance	25	—	—	S	V_{DS} = 15V, I_D = 11A
Q_g	Total Gate Charge	—	11	17		
Q_{gs1}	Pre-Vth Gate-to-Source Charge	—	2.4	—		V_{DS} = 15V
Q_{gs2}	Post-Vth Gate-to-Source Charge	—	1.2	—	nC	V_{GS} = 4.5V
Q_{gd}	Gate-to-Drain Charge	—	4.3	—		I_D = 11A
Q_{godr}	Gate Charge Overdrive	—	3.5	—		See Fig. 15
Q_{sw}	Switch Charge (Q_{gs2} + Q_{gd})	—	5.5	—		
Q_{oss}	Output Charge	—	11	—	nC	V_{DS} = 16V, V_{GS} = 0V
R_G	Gate Resistance	—	1.4	2.5	Ω	
$t_{d(on)}$	Turn-On Delay Time	—	11	—		V_{DD} = 15V, V_{GS} = 4.5V ⑦
t_r	Rise Time	—	7.8	—	ns	I_D = 11A
$t_{d(off)}$	Turn-Off Delay Time	—	9.5	—		R_G = 1.8Ω
t_f	Fall Time	—	6.1	—		See Fig. 17
C_{iss}	Input Capacitance	—	1300	—		V_{GS} = 0V
C_{oss}	Output Capacitance	—	490	—	pF	V_{DS} = 15V
C_{rss}	Reverse Transfer Capacitance	—	150	—		f = 1.0MHz

Diode Characteristics

	Parameter	Min.	Typ.	Max.	Units	Conditions
I_S	Continuous Source Current (Body Diode)	—	—	52	A	MOSFET symbol showing the integral reverse p-n junction diode. 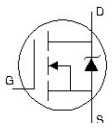
I_{SM}	Pulsed Source Current (Body Diode) ⑤	—	—	110		
V_{SD}	Diode Forward Voltage	—	0.81	1.0	V	T_J = 25°C, I_S = 11A, V_{GS} = 0V ⑦
t_{rr}	Reverse Recovery Time	—	19	29	ns	T_J = 25°C, I_F = 11A
Q_{rr}	Reverse Recovery Charge	—	26	39	nC	di/dt = 250A/μs ⑦

Notes:

⑦ Pulse width ≤ 400μs; duty cycle ≤ 2%.

Absolute Maximum Ratings

	Parameter	Max.	Units
P_D @T_A = 25°C	Power Dissipation ③	2.3	W
P_D @T_A = 70°C	Power Dissipation ③	1.5	
P_D @T_C = 25°C	Power Dissipation ④	42	
T_P	Peak Soldering Temperature	270	°C
T_J T_{STG}	Operating Junction and Storage Temperature Range	-40 to + 150	

Thermal Resistance

	Parameter	Typ.	Max.	Units
$R_{\theta JA}$	Junction-to-Ambient ③⑩	——	55	°C/W
$R_{\theta JA}$	Junction-to-Ambient ⑧⑩	12.5	——	
$R_{\theta JA}$	Junction-to-Ambient ⑨⑩	20	——	
$R_{\theta JC}$	Junction-to-Case ④⑩	——	3.0	
$R_{\theta J\text{-}PCB}$	Junction-to-PCB Mounted	1.0	——	
	Linear Derating Factor ③	0.018		W/°C

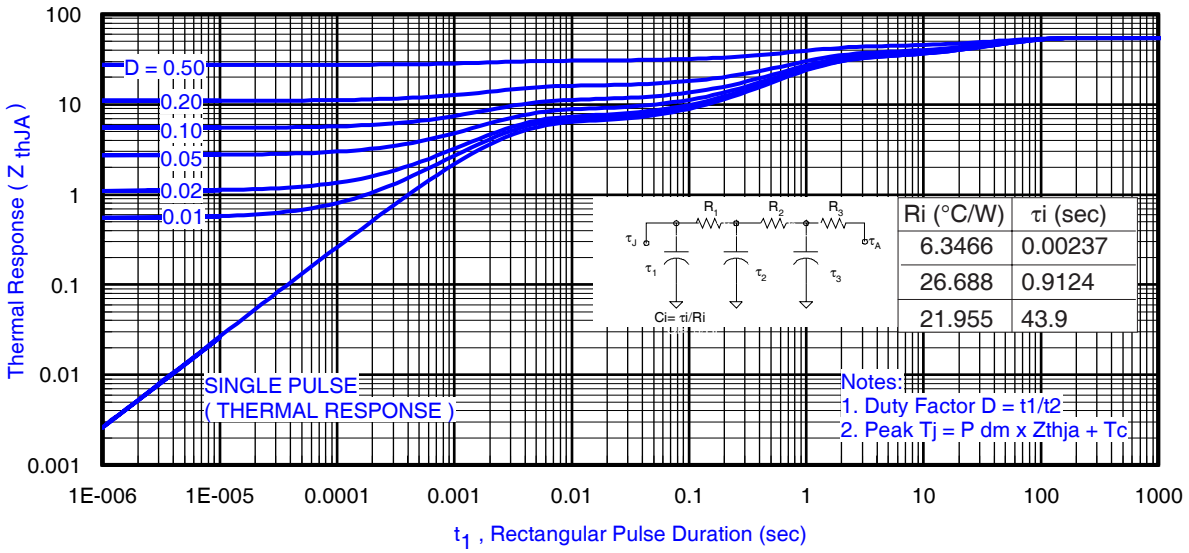

Fig 3. Maximum Effective Transient Thermal Impedance, Junction-to-Ambient ③

Notes:

⑧ Used double sided cooling , mounting pad with large heatsink.

⑨ Mounted on minimum footprint full size board with metalized back and with small clip heatsink.

⑩ R_θ is measured at T_J of approximately 90°C.

③ Surface mounted on 1 in. square Cu (still air).

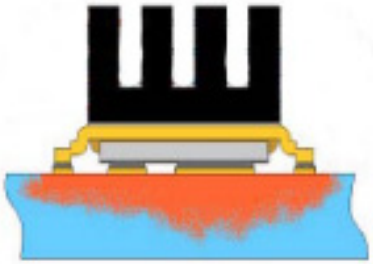

⑨ Mounted to a PCB with small clip heatsink (still air)

⑨ Mounted on minimum footprint full size board with metalized back and with small clip heatsink (still air)

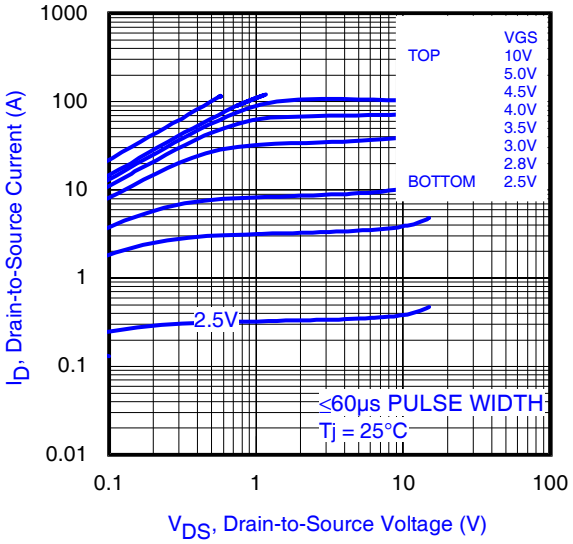

Fig 4. Typical Output Characteristics

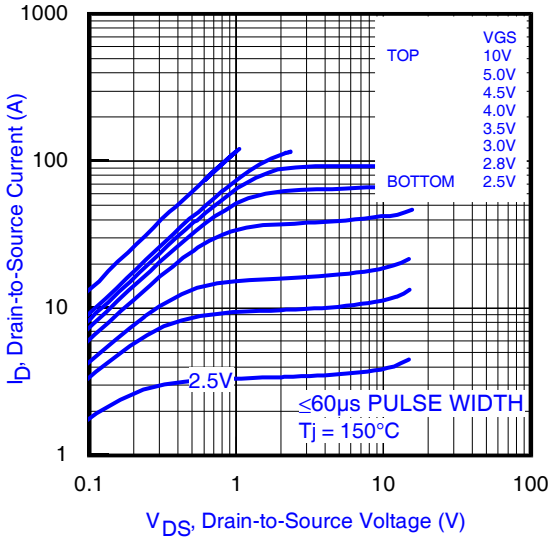

Fig 5. Typical Output Characteristics

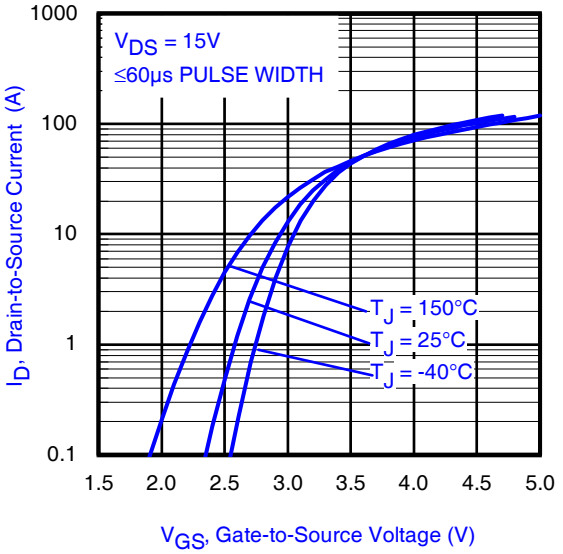

Fig 6. Typical Transfer Characteristics

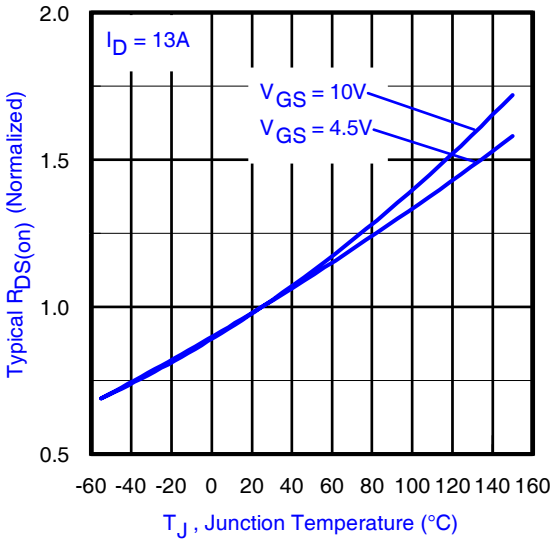

Fig 7. Normalized On-Resistance vs. Temperature

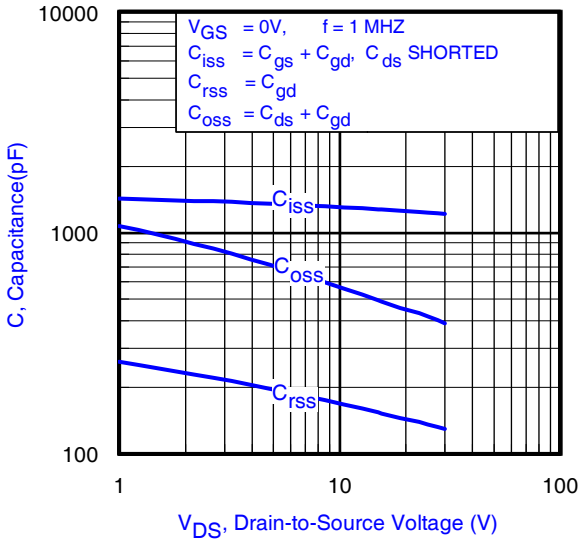

Fig 8. Typical Capacitance vs.Drain-to-Source Voltage

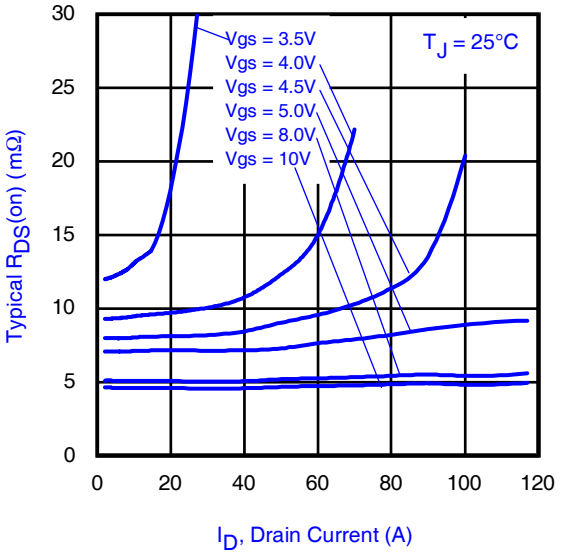

Fig 9. Typical On-Resistance vs. Drain Current and Gate Voltage

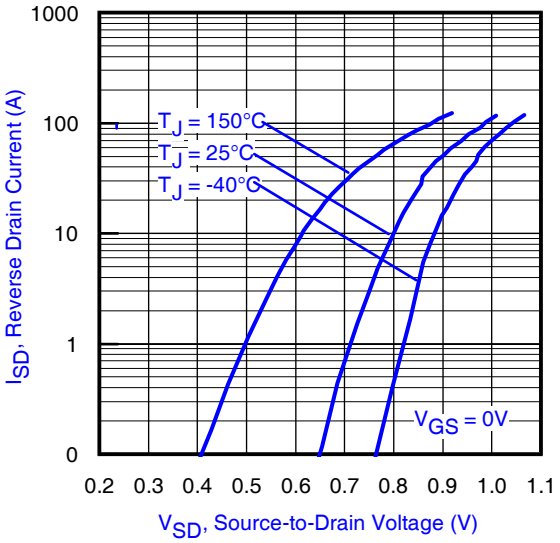

Fig 10. Typical Source-Drain Diode Forward Voltage

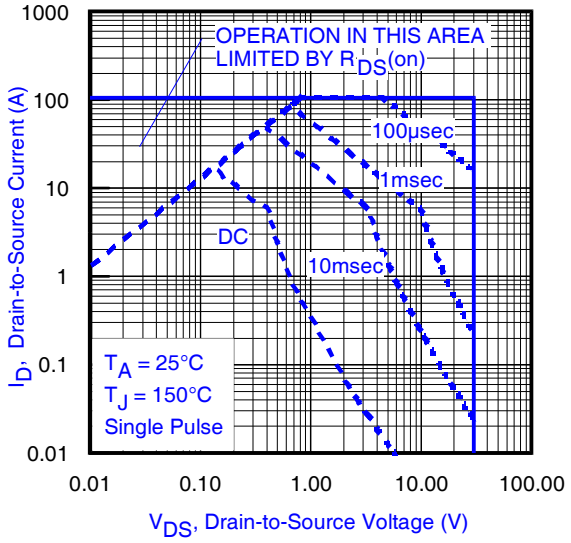

Fig11. Maximum Safe Operating Area

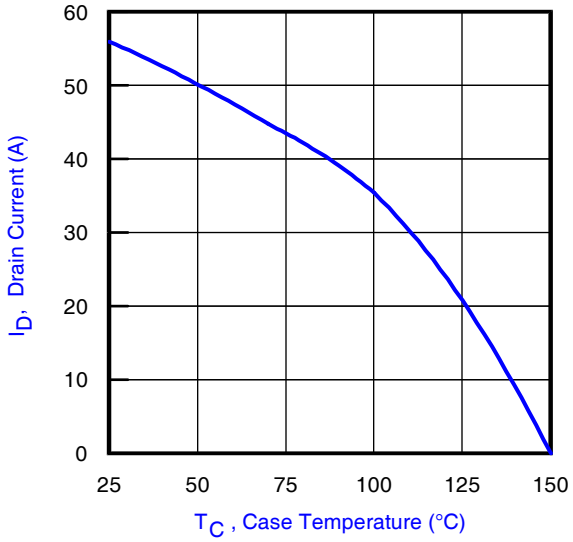

Fig 12. Maximum Drain Current vs. Case Temperature

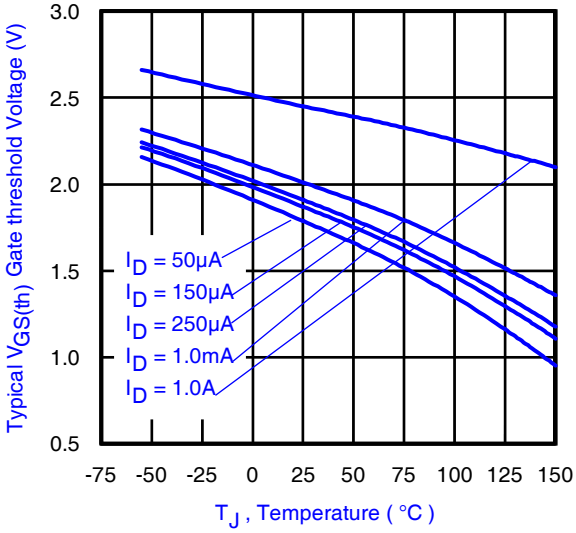

Fig 13. Typical Threshold Voltage vs. Junction Temperature

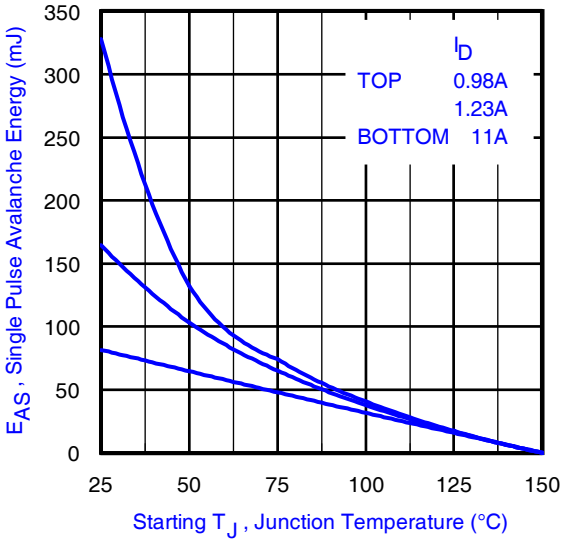

Fig 14. Maximum Avalanche Energy vs. Drain Current

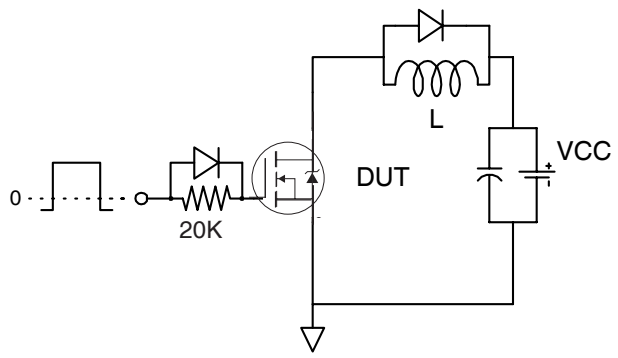

Fig 15a. Gate Charge Test Circuit

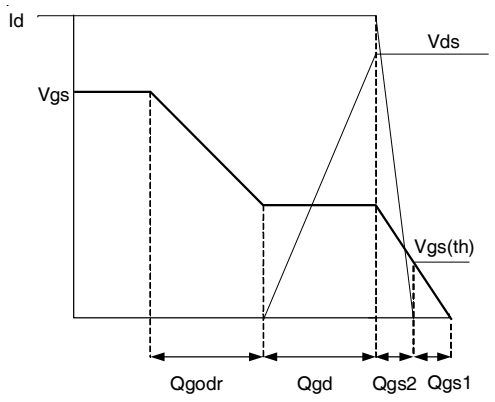

Fig 15b. Gate Charge Waveform

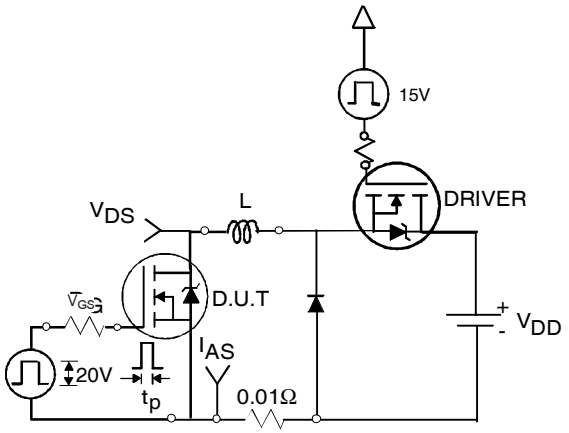

Fig 16a. Unclamped Inductive Test Circuit

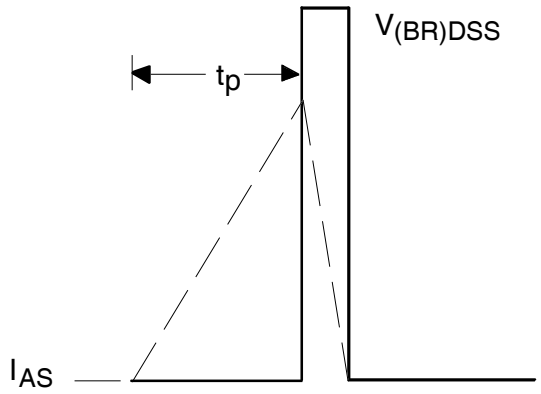

Fig 16b. Unclamped Inductive Waveforms

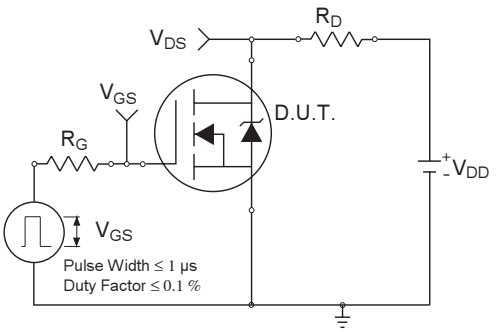

Fig 17a. Switching Time Test Circuit

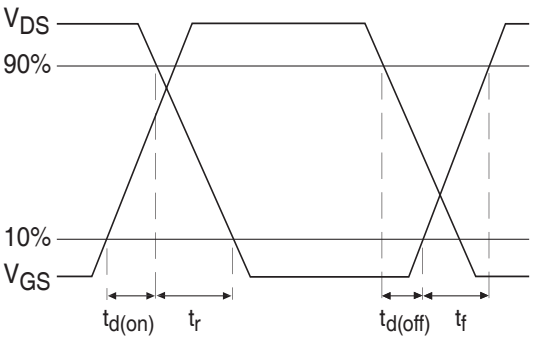

Fig 17b. Switching Time Waveforms

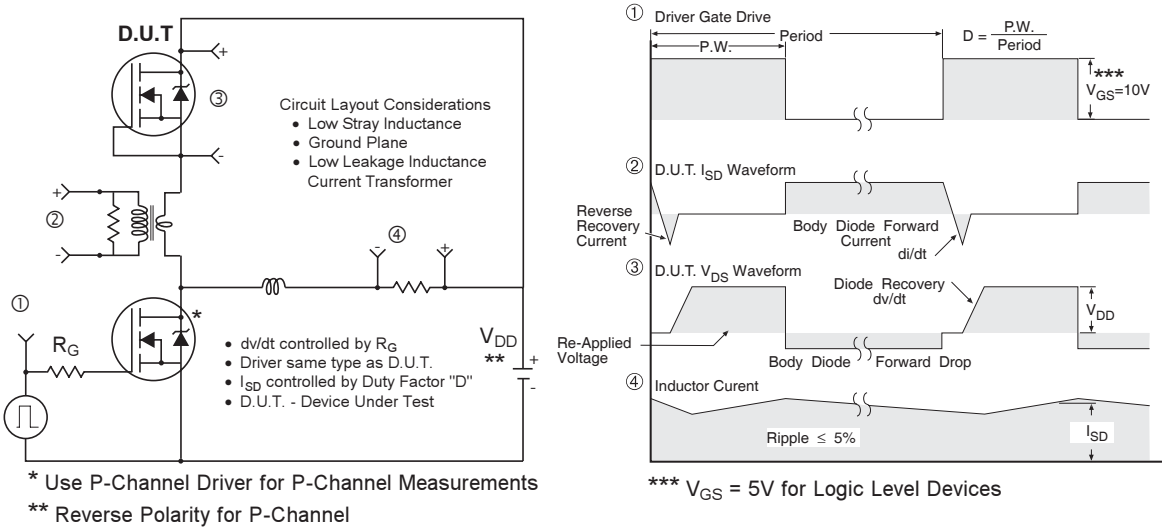

Fig 18. Diode Reverse Recovery Test Circuit for HEXFET® Power MOSFETs

DirectFET™ Board Footprint, MP Outline (Medium Size Can, P-Designation).

Please see DirectFET application note AN-1035 for all details regarding the assembly of DirectFET. This includes all recommendations for stencil and substrate designs.

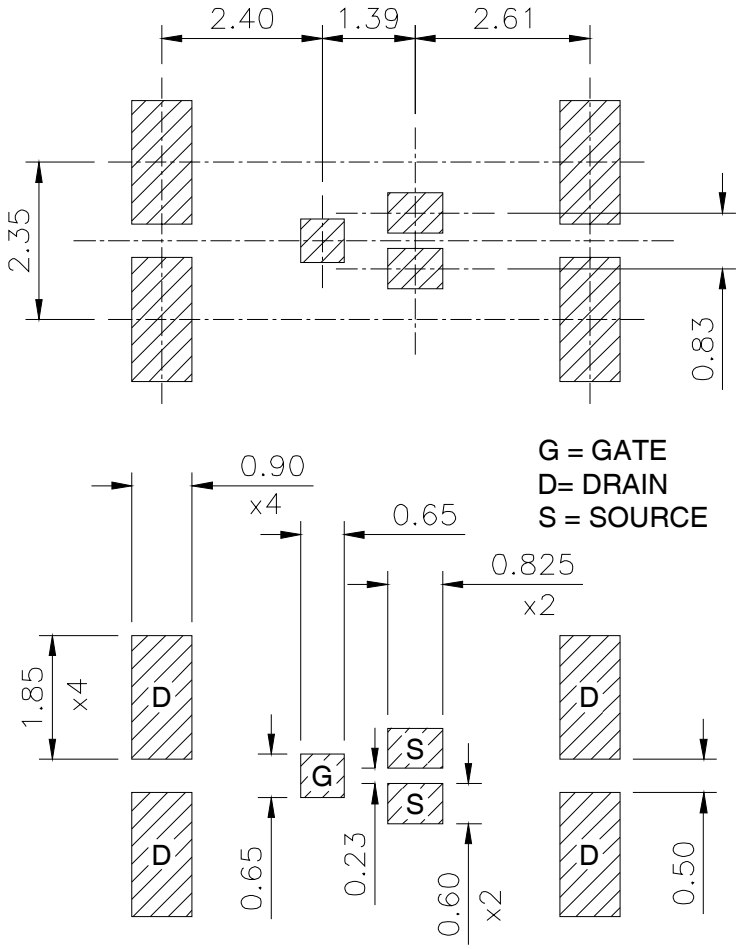

DirectFET™ Outline Dimension, MP Outline (Medium Size Can, P-Designation).

Please see DirectFET application note AN-1035 for all details regarding the assembly of DirectFET. This includes all recommendations for stencil and substrate designs.

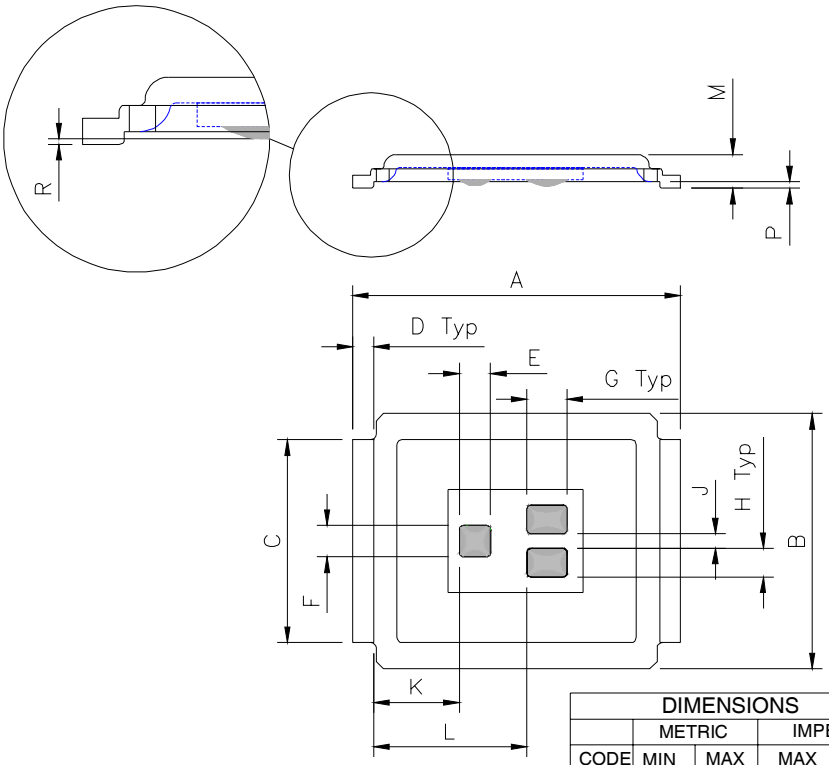

DIMENSIONS				
	METRIC		IMPERIAL	
CODE	MIN	MAX	MAX	MAX
A	6.25	6.35	0.246	0.250
B	4.80	5.05	1.889	0.199
C	3.85	3.95	0.152	0.156
D	0.35	0.45	0.014	0.018
E	0.58	0.62	0.023	0.032
F	0.58	0.62	0.023	0.032
G	0.75	0.79	0.030	0.031
H	0.53	0.57	0.021	0.022
J	0.63	0.67	0.025	0.026
K	1.59	1.72	0.063	0.068
L	2.87	3.04	0.113	0.119
M	0.616	0.676	0.0235	0.0274
R	0.020	0.080	0.0008	0.0031
P	0.08	0.17	0.003	0.007

DirectFET™ Part Marking

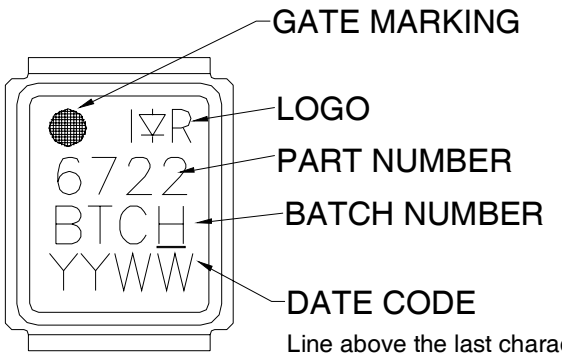

Line above the last character of the date code indicates "Lead-Free"

DirectFET™ Tape & Reel Dimension (Showing component orientation).

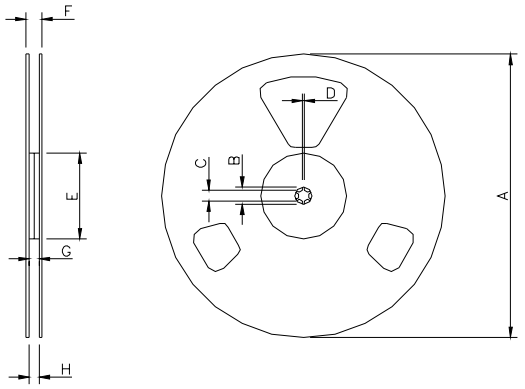

NOTE: Controlling dimensions in mm
Std reel quantity is 4800 parts. (ordered as IRF6722MTRPBF). For 1000 parts on 7" reel, order IRF6722MTR1PBF

REEL DIMENSIONS								
	STANDARD OPTION **(QTY 4800)**				TR1 OPTION **(QTY 1000)**			
	METRIC		IMPERIAL		METRIC		IMPERIAL	
CODE	MIN	MAX	MIN	MAX	MIN	MAX	MIN	MAX
A	330.0	N.C	12.992	N.C	177.77	N.C	6.9	N.C
B	20.2	N.C	0.795	N.C	19.06	N.C	0.75	N.C
C	12.8	13.2	0.504	0.520	13.5	12.8	0.53	0.50
D	1.5	N.C	0.059	N.C	1.5	N.C	0.059	N.C
E	100.0	N.C	3.937	N.C	58.72	N.C	2.31	N.C
F	N.C	18.4	N.C	0.724	N.C	13.50	N.C	0.53
G	12.4	14.4	0.488	0.567	11.9	12.01	0.47	N.C
H	11.9	15.4	0.469	0.606	11.9	12.01	0.47	N.C

LOADED TAPE FEED DIRECTION

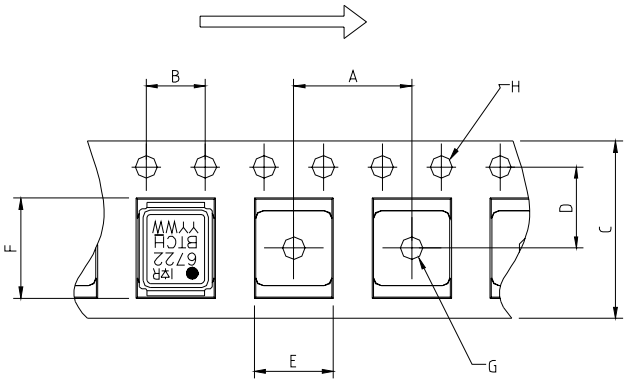

NOTE: CONTROLLING DIMENSIONS IN MM

DIMENSIONS				
	METRIC		IMPERIAL	
CODE	MIN	MAX	MIN	MAX
A	7.90	8.10	0.311	0.319
B	3.90	4.10	0.154	0.161
C	11.90	12.30	0.469	0.484
D	5.45	5.55	0.215	0.219
E	5.10	5.30	0.201	0.209
F	6.50	6.70	0.256	0.264
G	1.50	N.C	0.059	N.C
H	1.50	1.60	0.059	0.063

Data and specifications subject to change without notice.
This product has been designed and qualified for the Consumer market.
Qualification Standards can be found on IR's Web site.

International
IOR Rectifier

IR WORLD HEADQUARTERS: 233 Kansas St., El Segundo, California 90245, USA Tel: (310) 252-7105
TAC Fax: (310) 252-7903
Visit us at www.irf.com for sales contact information.11/2007

IMPORTANT NOTICE

The information given in this document shall in no event be regarded as a guarantee of conditions or characteristics ("Beschaffenheitsgarantie") .

With respect to any examples, hints or any typical values stated herein and/or any information regarding the application of the product, Infineon Technologies hereby disclaims any and all warranties and liabilities of any kind, including without limitation warranties of non-infringement of intellectual property rights of any third party.

In addition, any information given in this document is subject to customer's compliance with its obligations stated in this document and any applicable legal requirements, norms and standards concerning customer's products and any use of the product of Infineon Technologies in customer's applications.

The data contained in this document is exclusively intended for technically trained staff. It is the responsibility of customer's technical departments to evaluate the suitability of the product for the intended application and the completeness of the product information given in this document with respect to such application.

For further information on the product, technology, delivery terms and conditions and prices please contact your nearest Infineon Technologies office (**www.infineon.com**).

WARNINGS

Due to technical requirements products may contain dangerous substances. For information on the types in question please contact your nearest Infineon Technologies office.

Except as otherwise explicitly approved by Infineon Technologies in a written document signed by authorized representatives of Infineon Technologies, Infineon Technologies' products may not be used in any applications where a failure of the product or any consequences of the use thereof can reasonably be expected to result in personal injury.