MATERIAL NO.	ENGINEERING NO.	FINISHED LENGTH
1300101242	115030A01F010	1FT (0.3M)
1300101717	115030A01M420	137FT 9.5IN (42M)
1300101699	115030A01M670	219FT 9.8IN (67M)

PART NO. MATRIX

115030A01-M005

FINISHED LENGTH
F020=2 FEET
F200=20 FEET
M005= 0.5 METER
M010= 1 METER
M100= 10 METER

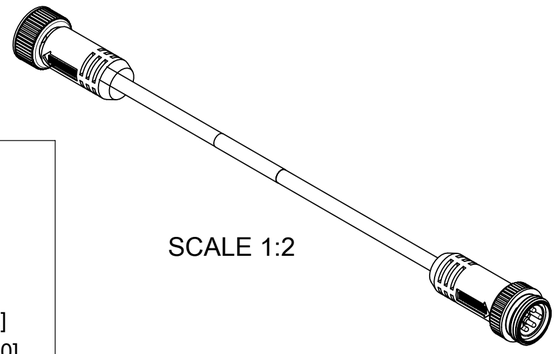

SCALE 1:2

CABLE LENGTH TOLERANCES
<.3M [1FT]: +19mm-0 [+.75in-0]
.3 - .9M [1 - 3FT]: +44.5mm-0 [+1.75in-0]
.9 - 1.8M [3 - 6FT]: +55.6mm-0 [+2.19in-0]
1.8 - 3.7M [6 - 12FT: +88.9mm-0 [+3.50in-0]
3.7 - 7.3M [12 - 24FT]: +165.1mm-0 [+6.50in-0]
7.3-14.6M [24 - 48FT]: +317.5mm-0 [+12.50in-0]
14.6 - 30.5M [48-100FT]: +622.3mm-0 [+24.50in-0]
OVER 30M [100FT] +2% OF FINISHED LENGTH

NOTES:
1. MATERIAL: AS NOTED
2. FINISH: AS NOTED
3. ELECTRICAL SPECIFICATIONS
   VOLTAGE RATING: 400V PER IEC60664
   600V PER UL2238
   CURRENT RATING: 8A
4. TEMP RANGE: -20°C TO +105°C
5. PROTECTION: IP67 (WHEN MATED)
6. UL RECOGNIZED FILE: E152210
   CSA CERTIFIED FILE: LR6837
7. ALL DIMS ARE FOR REFERENCE UNLESS TOLERANCED OR NOTED OTHERWISE

WIRING DIAGRAM

1	WHITE	1
2	RED	2
3	GREEN/YELLOW	3
4	ORANGE	4
5	BLACK	5

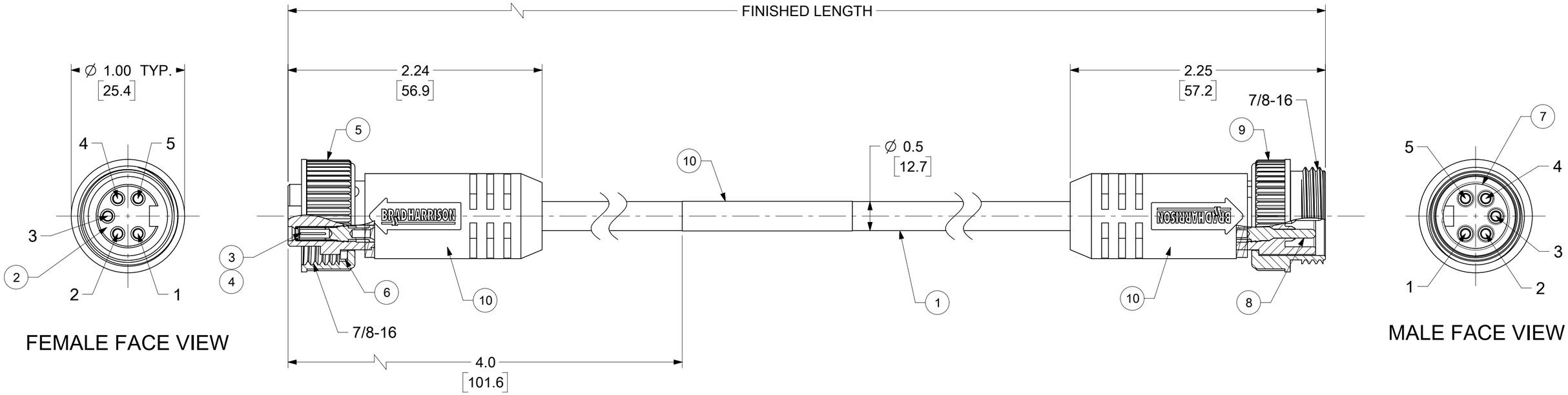

ITEM	DESCRIPTION	MATERIAL	FINISH	
11	LABEL	VINYL	BLACK/YELLOW	
10	OVERMOLD	TPE	YELLOW	A
9	COUPLING NUT, MALE	ZINC DIE-CAST	BLACK E-COAT	
8	CONTACT PIN	COPPER ALLOY	SELECTIVE GOLD/NICKEL	
7	MALE INSERT	TPE	YELLOW	A
6	FRICTION RING	NYLON	NATURAL	
5	COUPLING NUT, FEMALE	ZINC DIE-CAST	BLACK E-COAT	
4	SLEEVE	STAINLESS STEEL	-	
3	CONTACT SOCKET	COPPER ALLOY	SELECTIVE GOLD/NICKEL	
2	FEMALE INSERT	TPE	YELLOW	A
1	CABLE, 16/5 AWG	PVC JACKET	YELLOW	

DOCUMENT STATUS	P1	RELEASE DATE	2020/11/18 23:03:21

THIS DRAWING CONTAINS INFORMATION THAT IS PROPRIETARY TO MOLEX ELECTRONIC TECHNOLOGIES, LLC AND SHOULD NOT BE USED WITHOUT WRITTEN PERMISSION

DIMENSION UNITS: INCH/MM
SCALE: 1.5:1

GENERAL TOLERANCES (UNLESS SPECIFIED)

	MM	INCH
4 PLACES	±	±
3 PLACES	±	±
2 PLACES	±	±
1 PLACE	±	±
0 PLACES	±	±
ANGULAR TOL	± °	

DRAFT WHERE APPLICABLE MUST REMAIN WITHIN DIMENSIONS

CURRENT REV DESC: INITIAL RELEASE, PVC CHANGED TO TPE

EC NO: 648668
DRWN: VBASUTHKARP 2020/10/14
CHK'D: RSTONE 2020/11/11
APPR: BWOODMAN 2020/11/18

INITIAL REVISION:
DRWN: VBASUTHKARP 2020/10/14
APPR: BWOODMAN 2020/11/18

THIRD ANGLE PROJECTION | DRAWING: C-SIZE | SERIES: 130010

molex

MINI-CHANGE CORDSET, A SIZE
5 POLE, MALE-FEMALE, STRAIGHT, SINGLE KEY, 16 AWG

PRODUCT CUSTOMER DRAWING

DOCUMENT NUMBER	DOC TYPE	DOC PART	REVISION
1300101253	PSD	000	A

MATERIAL NUMBER	CUSTOMER	SHEET NUMBER
SEE TABLE	GENERAL MARKET	1 OF 1

FORMAT: Eng-lega-master-tb-prod-C
REVISION: E
DATE: 2020/11/4