GlobTek, Inc.
www.globtek.com
186 Veterans Drive,
Northvale, NJ 07647
Tel. (201) 784-1000
Fax (201) 784-0111

| | |
|---|---|
| Drawing Title: GT-46180-1809, ICT/ITE Power Supply, Efficiency Level: USA DOE Level VI / Eco-design Directive 2009/125/EC, (EU) 2019/1782, Case Color/Style: GlobTek Black, Wall Plug-in, Regulated Switchmode AC-DC Power Supply AC Adaptor, Input Rating: 100-240V~, 50-60 Hz, Interchangeable Blades http://en.globtek.com/interchangeable-blades.php, Output Rating: 18W, 9.0V@2.0A, Output Configuration: 1530 mm, 18/2 Cond, UL 2468, Female Barrel 5.5 * 2.5 * 11mm with internal Spring Clip and Locking Notch or Equal, Ferrite: Core Size: 12*20*7.3mm, GlobTek Black, GT Cord # C2614, Pin Out: Center Positive (+V), symbol compliant with IEC 60417 symbol no. 5926, Blades/Input Cord: (Order Separately), Approvals: CB 62368; Saudi; 230V CoC Tier 2; EAC; NOM (5,9,12,15,18,20,24V only); Saudi; Israel (12V only); South Africa; UKCA; cULus; RCM; NrCAN (12V only); GEMS; LPS 62368; Morocco; Morocco; Malaysia; CCC; CB 60950; CE; China RoHS; Double Insulation; IP40; Level VI; LPS 60950; PSE; RoHS; Ukraine; VCCI; WEEE; EAC; cULus; Taiwan BSMI (12V, 7.5V only); Singapore (12V); IRAM; Korea (9V, 12V, 15V Only); Singapore (7.5V); India (12V only); FCC; Korea (5V, 6V, 7V, 7.5V Only); PSE; PSE; PSE; CAN ICES-3; South Africa; | |
| Model No. GT-46180-1809 | |
| Part No./Ordering No. WR9QD2000LCP-N(R6B) | Rev D |

In Addition to GlobTek Inc.'s renewed ISO9001:2015 - Quality Management System Certification, GlobTek Inc. is now certified to:

ISO13485:2016 - Medical Devices Quality Management System Certification
ISO14001:2015 - Environmental Management System Certification

ISO Certificates are available online at https://www.globtek.com/iso-certificates/

The acceptance of this specification and use of the product described in this document indicates the acceptance and binding of the customer to Globtek TERMS AND CONDITIONS (attached to the end of this document), which supersede all other agreements, terms, and conditions (https://en.globtek.com/terms-and-conditions/).

The purchaser of this product (Customer) agrees that it is their sole responsibility to determine suitability/fitness of the product described in this specification for their application and to take precautions for protection against any hazards attendant to the handling and use of the product.

Footnote:

GlobTek Inc. will not be liable for the safety and performance of these power supplies/battery packs if unauthorized access and repair occurs. End user should consult applicable UL, CSA or EN standards for proper installation instruction.

Limitation of Use:

GlobTek products are intended for use with commercial, medical, and/or industrial equipment only. GlobTek product are not authorized for use as mission critical components in life support hazardous environment, nuclear or aircraft applications without prior written approval from the CEO of GlobTek Inc.
Contents of this document are subject to change without prior notice.

## Customer Approval of Specification:

Please approve, sign and send back to GlobTek so we can complete order processing.
A delay in receipt of this form will delay delivery schedule.

| | |
|---|---|
| Company Name: | Customer P/N: |
| Quote Number: | Date: |
| Authorized Representative Name: | Authorized Representative Signature: |

PROPRIETARY INFORMATION
PROPRIETARY OF GLOBTEK, INC. ANY REPRODUCTION, DISCLOSURE OR USE OF THIS DRAWING, IN WHOLE OR IN PART, IS HEREBY PROHIBITED EXCEPT AS SPECIFIED IN WRITING BY GLOBTEK, INC. © GlobTek, Inc. 2015 - 2022
guest /08/28/2022 5:42:29 PM

GlobTek, Inc.
www.globtek.com
186 Veterans Drive,
Northvale, NJ 07647
Tel. (201) 784-1000
Fax (201) 784-0111

Drawing Title: GT-46180-1809, ICT/ITE Power Supply, Efficiency Level: USA DOE Level VI / Eco-design Directive 2009/125/EC, (EU) 2019/1782, Case Color/Style: GlobTek Black, Wall Plug-in, Regulated Switchmode AC-DC Power Supply AC Adaptor, Input Rating: 100-240V~, 50-60 Hz, Interchangeable Blades http://en.globtek.com/interchangeable-blades.php, Output Rating: 18W, 9.0V@2.0A, Output Configuration: 1530 mm, 18/2 Cond, UL 2468, Female Barrel 5.5 * 2.5 * 11mm with internal Spring Clip and Locking Notch or Equal, Ferrite: Core Size: 12*20*7.3mm, GlobTek Black, GT Cord # C2614, Pin Out: Center Positive (+V), symbol compliant with IEC 60417 symbol no. 5926, Blades/Input Cord: (Order Separately), Approvals: CB 62368; Saudi; 230V CoC Tier 2; EAC; NOM (5,9,12,15,18,20,24V only); Saudi; Israel (12V only); South Africa; UKCA; cULus; RCM; NrCAN (12V only); GEMS; LPS 62368; Morocco; Morocco; Malaysia; CCC; CB 60950; CE; China RoHS; Double Insulation; IP40; Level VI; LPS 60950; PSE; RoHS; Ukraine; VCCI; WEEE; EAC; cULus; Taiwan BSMI (12V, 7.5V only); Singapore (12V); IRAM; Korea (9V, 12V, 15V Only); Singapore (7.5V); India (12V only); FCC; Korea (5V, 6V, 7V, 7.5V Only); PSE; PSE; PSE; CAN ICES-3; South Africa;

Model No. GT-46180-1809

Part No./Ordering No. WR9QD2000LCP-N(R6B) Rev D

# REVISION HISTORY

| REV | DESCRIPTION | SUB | DATE | APPROVED |
|---|---|---|---|---|
| D | Model is GT-46180-1809, skip Rev.B with changing model name to GT-46180-1809-3.05 | QA | 05/28/2019 | QA |
| C | Update CCC, ROHS 2 to ROHS, Ukraine 10139 TO 10276, add Saudi Arabia | QA | 05/24/2019 | QA |
| B | Change: model name to GT-46180-1809-3.05, CQC-PSE to TUV-PSE, Cable length (mm) 1830 to 1530, Wire gauge (AWG) 20 to 18 | QA | 10/17/2016 | QA |
| A | Initial release | QA | 05/19/2015 | QA |

## POWER SUPPLY INFORMATION

| | |
|---|---|
| TYPE: | Wall Plug-in |
| TECHNOLOGY: | Regulated Switchmode AC-DC Power Supply AC Adaptor |
| CASE COLOR: | GlobTek Black |
| NAMEPLATE RATED INPUT: | 100-240V~, 50-60 Hz, 0.6 A |
| INPUT CONFIG: | Interchangeable Blades |
| WATTS: | 18.0 |
| VOLTS OUT: | 9.0 |
| CURRENT OUT (Amps): | 2.0 |
| BLADE/CORD INCLUDED: | None (Order Separately) |
| BLADE/CORD INSTALLED: | None :(Order Separately) |
| INGRESS PROTECTION: | Indoor Use |
| GROUNDING CONFIGURATION: | (F1) Class II / Double Insulated |
| EFFICIENCY LEVEL: | USA DOE Level VI / Eco-design Directive 2009/125/EC, (EU) 2019/1782 - Europe Code of Conduct on Energy Efficiency of External Power Supplies - Version 5 |
| OUTPUT CONFIGURATION: | 1530 mm, 18/2 Cond, UL 2468, Female Barrel 5.5 * 2.5 * 11mm with internal Spring Clip and Locking Notch or Equal, Ferrite: Core Size: 12*20*7.3mm, GlobTek Black, GT Cord # C2614 |
| CONNECTOR PIN OUT: | Center Positive (+V), symbol compliant with IEC 60417 symbol no. 5926 |
| LABEL SPECS: | Standard GT,L-1186 |
| SPECIAL BARCODE LABEL MATERIAL: | No |
| PACK SPEC: | Standard WPI, Individually Box, User manual |
| USER MANUAL: | 809-PSUQKITUSERMANUAL on A4 paper |

PROPRIETARY INFORMATION
PROPRIETARY OF GLOBTEK, INC. ANY REPRODUCTION, DISCLOSURE OR USE OF THIS DRAWING, IN WHOLE OR IN PART, IS HEREBY PROHIBITED EXCEPT AS SPECIFIED IN WRITING BY GLOBTEK, INC. © GlobTek, Inc. 2015 - 2022
guest /08/28/2022 5:42:29 PM

GlobTek, Inc.
www.globtek.com
186 Veterans Drive,
Northvale, NJ 07647
Tel. (201) 784-1000
Fax (201) 784-0111

| | |
|---|---|
| Drawing Title: GT-46180-1809, ICT/ITE Power Supply, Efficiency Level: USA DOE Level VI / Eco-design Directive 2009/125/EC, (EU) 2019/1782, Case Color/Style: GlobTek Black, Wall Plug-in, Regulated Switchmode AC-DC Power Supply AC Adaptor, Input Rating: 100-240V~, 50-60 Hz, Interchangeable Blades http://en.globtek.com/interchangeable-blades.php, Output Rating: 18W, 9.0V@2.0A, Output Configuration: 1530 mm, 18/2 Cond, UL 2468, Female Barrel 5.5 * 2.5 * 11mm with internal Spring Clip and Locking Notch or Equal, Ferrite: Core Size: 12*20*7.3mm, GlobTek Black, GT Cord # C2614, Pin Out: Center Positive (+V), symbol compliant with IEC 60417 symbol no. 5926, Blades/Input Cord: (Order Separately), Approvals: CB 62368; Saudi; 230V CoC Tier 2; EAC; NOM (5,9,12,15,18,20,24V only); Saudi; Israel (12V only); South Africa; UKCA; cULus; RCM; NrCAN (12V only); GEMS; LPS 62368; Morocco; Morocco; Malaysia; CCC; CB 60950; CE; China RoHS; Double Insulation; IP40; Level VI; LPS 60950; PSE; RoHS; Ukraine; VCCI; WEEE; EAC; cULus; Taiwan BSMI (12V, 7.5V only); Singapore (12V); IRAM; Korea (9V, 12V, 15V Only); Singapore (7.5V); India (12V only); FCC; Korea (5V, 6V, 7V, 7.5V Only); PSE; PSE; PSE; CAN ICES-3; South Africa; | |
| Model No. GT-46180-1809 | |
| Part No./Ordering No. WR9QD2000LCP-N(R6B) | Rev D |

Notes/Modifications/Customizations (notes in this section supersede the values shown in the standard spec):

DIMENSIONS ARE IN MM UNLESS SPECIFIED OTHERWISE.

PROPRIETARY INFORMATION
PROPRIETARY OF GLOBTEK, INC. ANY REPRODUCTION, DISCLOSURE OR USE OF THIS DRAWING, IN WHOLE OR IN PART, IS HEREBY PROHIBITED EXCEPT AS SPECIFIED IN WRITING BY GLOBTEK, INC. © GlobTek, Inc. 2015 - 2022
guest /08/28/2022 5:42:29 PM

GlobTek, Inc.
www.globtek.com
186 Veterans Drive,
Northvale, NJ 07647
Tel. (201) 784-1000
Fax (201) 784-0111

| | |
|---|---|
| Drawing Title: GT-46180-1809, ICT/ITE Power Supply, Efficiency Level: USA DOE Level VI / Eco-design Directive 2009/125/EC, (EU) 2019/1782, Case Color/Style: GlobTek Black, Wall Plug-in, Regulated Switchmode AC-DC Power Supply AC Adaptor, Input Rating: 100-240V~, 50-60 Hz, Interchangeable Blades http://en.globtek.com/interchangeable-blades.php, Output Rating: 18W, 9.0V@2.0A, Output Configuration: 1530 mm, 18/2 Cond, UL 2468, Female Barrel 5.5 * 2.5 * 11mm with internal Spring Clip and Locking Notch or Equal, Ferrite: Core Size: 12*20*7.3mm, GlobTek Black, GT Cord # C2614, Pin Out: Center Positive (+V), symbol compliant with IEC 60417 symbol no. 5926, Blades/Input Cord: (Order Separately), Approvals: CB 62368; Saudi; 230V CoC Tier 2; EAC; NOM (5,9,12,15,18,20,24V only); Saudi; Israel (12V only); South Africa; UKCA; cULus; RCM; NrCAN (12V only); GEMS; LPS 62368; Morocco; Morocco; Malaysia; CCC; CB 60950; CE; China RoHS; Double Insulation; IP40; Level VI; LPS 60950; PSE; RoHS; Ukraine; VCCI; WEEE; EAC; cULus; Taiwan BSMI (12V, 7.5V only); Singapore (12V); IRAM; Korea (9V, 12V, 15V Only); Singapore (7.5V); India (12V only); FCC; Korea (5V, 6V, 7V, 7.5V Only); PSE; PSE; PSE; CAN ICES-3; South Africa; | |
| Model No. GT-46180-1809 | |
| Part No./Ordering No. WR9QD2000LCP-N(R6B) | Rev D |

## ELECTRICAL SPECIFICATIONS

A) ELECTRICAL SPECIFICATIONS:

01. Input Voltage: Specified 90-264 Vac, Nameplate rated: 100-240Vac
    (85-264Vac range @ 85% of rated load)
02. Input Frequency: Specified 47-63 Hz, Nameplate rated 50-60Hz
03. Inrush Current: No damage. On power when switching on/off repeatedly under any condition.
04. Average Efficiency: 85% Min (CEC & DOE LEVEL VI Compliant), 85.45% Min (ErP European Commission's Ecodesign Directive (2005/32/EC) / CoC Tier 2 Compliant)
05. Input power(no load): <0.1W (CEC & DOE LEVEL VI Compliant), <0.075W (ErP European Commission's Ecodesign Directive (2005/32/EC) / CoC Tier 2 Compliant)
06. Output Voltage toterance: ±5%
07. Line regulation: ± 1%
08. Output Voltage: Tolerance ± 5%
09. Turn On Delay: 3000 mS MAX at 115 VAC Full Load
10. Hold Up Time: 10 mS Min at 100 VAC Full Load
11. Ripple Voltage: +/-1% or 150 mV whichever is greater, measured at 20 MHz bandwidth with 0.1 uf ceramic capacitor in parallel with 10 uf electrolytic capacitor connected at the end of the output connector at nominal line.

B) PROTECTION

01. Over voltage protection: Output shut down and auto restart
02. Short circuit protection: Output shut down and auto restart
03.Over Load Protection: Output shut down and auto restart

C) SAFETY

01. HI-POT : Input to output : 3000VAC or 4242VDC 10mA 1 minute
02. Touch current: <0.25mA
03. ESD: Contact discharges 8kV, Air discharges 15 kV
04. Fast transients/bursts: 4 kV

D) OTHER:

01. MTBF: 200,000 Hours @ 25°C ambient temperature
02. Operating Temperature: 0°C to 40°C ambient temperature
03. Humidity Operating : 20% to 80%. 0% to 90% relative humidity
04. Elevation up to 4000 m
05. Storage Temperature: -10°C to 70°C

PROPRIETARY INFORMATION
PROPRIETARY OF GLOBTEK, INC. ANY REPRODUCTION, DISCLOSURE OR USE OF THIS DRAWING, IN WHOLE OR IN PART, IS HEREBY PROHIBITED EXCEPT AS SPECIFIED IN WRITING BY GLOBTEK, INC. © GlobTek, Inc. 2015 - 2022
guest /08/28/2022 5:42:29 PM

Humidity Storage: 10% to 90%

06. RoHS: Complies with EU 2015/863 and China SJ/T11363-2014

E) ENCLOSURE

01. Housing: High impact plastic, 94V0 polycarbonate, non-vented

02. Size: 74.0 x 43.5 x 34.0 +/-1.0 mm

03. Weight : 68.5 g

04. Markings: Label and/or Pad Printed and/or Molded in the case

TO ADDRESS SYSTEM-LEVEL EMI CONCERNS, FERRITE CHOKES/BEADS MAY BE ADDED/REVISED UPON REQUEST. A SAMPLE KIT OF GLOBTEK'S STANDARD FERRITES IS AVAILABLE UNDER GLOBTEK P/N: EMI-MITIGATION-KIT1

FOR ADDITIONAL INFORMATION, PLEASE READ OUR WHITE PAPER AT:
https://en.globtek.com/technical-articles/ferrite-kit-radiated-emi-suppression-kit-for-globtek-power-supplies-cable-assemblies

INGRESS PROTECTION: Indoor Use


PROPRIETARY INFORMATION
PROPRIETARY OF GLOBTEK, INC. ANY REPRODUCTION, DISCLOSURE OR USE OF THIS DRAWING, IN WHOLE OR IN PART, IS HEREBY PROHIBITED EXCEPT AS SPECIFIED IN WRITING BY GLOBTEK, INC. © GlobTek, Inc. 2015 - 2022
guest /08/28/2022 5:42:29 PM

GlobTek, Inc.
www.globtek.com
186 Veterans Drive,
Northvale, NJ 07647
Tel. (201) 784-1000
Fax (201) 784-0111

| | |
|---|---|
| Drawing Title: GT-46180-1809, ICT/ITE Power Supply, Efficiency Level: USA DOE Level VI / Eco-design Directive 2009/125/EC, (EU) 2019/1782, Case Color/Style: GlobTek Black, Wall Plug-in, Regulated Switchmode AC-DC Power Supply AC Adaptor, Input Rating: 100-240V~, 50-60 Hz, Interchangeable Blades http://en.globtek.com/interchangeable-blades.php, Output Rating: 18W, 9.0V@2.0A, Output Configuration: 1530 mm, 18/2 Cond, UL 2468, Female Barrel 5.5 * 2.5 * 11mm with internal Spring Clip and Locking Notch or Equal, Ferrite: Core Size: 12*20*7.3mm, GlobTek Black, GT Cord # C2614, Pin Out: Center Positive (+V), symbol compliant with IEC 60417 symbol no. 5926, Blades/Input Cord: (Order Separately), Approvals: CB 62368; Saudi; 230V CoC Tier 2; EAC; NOM (5,9,12,15,18,20,24V only); Saudi; Israel (12V only); South Africa; UKCA; cULus; RCM; NrCAN (12V only); GEMS; LPS 62368; Morocco; Morocco; Malaysia; CCC; CB 60950; CE; China RoHS; Double Insulation; IP40; Level VI; LPS 60950; PSE; RoHS; Ukraine; VCCI; WEEE; EAC; cULus; Taiwan BSMI (12V, 7.5V only); Singapore (12V); IRAM; Korea (9V, 12V, 15V Only); Singapore (7.5V); India (12V only); FCC; Korea (5V, 6V, 7V, 7.5V Only); PSE; PSE; PSE; CAN ICES-3; South Africa; | |
| Model No. GT-46180-1809 | |
| Part No./Ordering No. WR9QD2000LCP-N(R6B) | Rev D |

3D File Download https://www.globtek.com/dl/GT-46180-18VV-xx-Q.stp

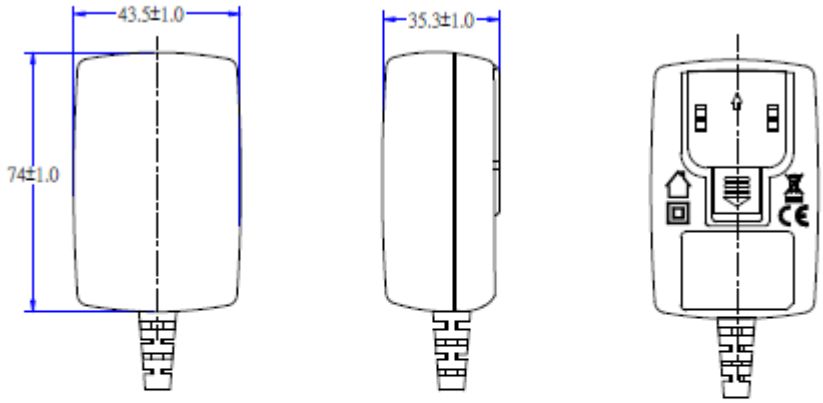


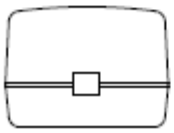

PROPRIETARY INFORMATION
PROPRIETARY OF GLOBTEK, INC. ANY REPRODUCTION, DISCLOSURE OR USE OF THIS DRAWING, IN WHOLE OR IN PART, IS HEREBY PROHIBITED EXCEPT AS SPECIFIED IN WRITING BY GLOBTEK, INC. © GlobTek, Inc. 2015 - 2022
guest /08/28/2022 5:42:29 PM

GlobTek, Inc.
www.globtek.com
186 Veterans Drive,
Northvale, NJ 07647
Tel. (201) 784-1000
Fax (201) 784-0111

Drawing Title: GT-46180-1809, ICT/ITE Power Supply, Efficiency Level: USA DOE Level VI / Eco-design Directive 2009/125/EC, (EU) 2019/1782, Case Color/Style: GlobTek Black, Wall Plug-in, Regulated Switchmode AC-DC Power Supply AC Adaptor, Input Rating: 100-240V~, 50-60 Hz, Interchangeable Blades http://en.globtek.com/interchangeable-blades.php, Output Rating: 18W, 9.0V@2.0A, Output Configuration: 1530 mm, 18/2 Cond, UL 2468, Female Barrel 5.5 * 2.5 * 11mm with internal Spring Clip and Locking Notch or Equal, Ferrite: Core Size: 12*20*7.3mm, GlobTek Black, GT Cord # C2614, Pin Out: Center Positive (+V), symbol compliant with IEC 60417 symbol no. 5926, Blades/Input Cord: (Order Separately), Approvals: CB 62368; Saudi; 230V CoC Tier 2; EAC; NOM (5,9,12,15,18,20,24V only); Saudi; Israel (12V only); South Africa; UKCA; cULus; RCM; NrCAN (12V only); GEMS; LPS 62368; Morocco; Morocco; Malaysia; CCC; CB 60950; CE; China RoHS; Double Insulation; IP40; Level VI; LPS 60950; PSE; RoHS; Ukraine; VCCI; WEEE; EAC; cULus; Taiwan BSMI (12V, 7.5V only); Singapore (12V); IRAM; Korea (9V, 12V, 15V Only); Singapore (7.5V); India (12V only); FCC; Korea (5V, 6V, 7V, 7.5V Only); PSE; PSE; PSE; CAN ICES-3; South Africa;

Model No. GT-46180-1809

Part No./Ordering No. WR9QD2000LCP-N(R6B) | Rev D

## DERATING CURVE

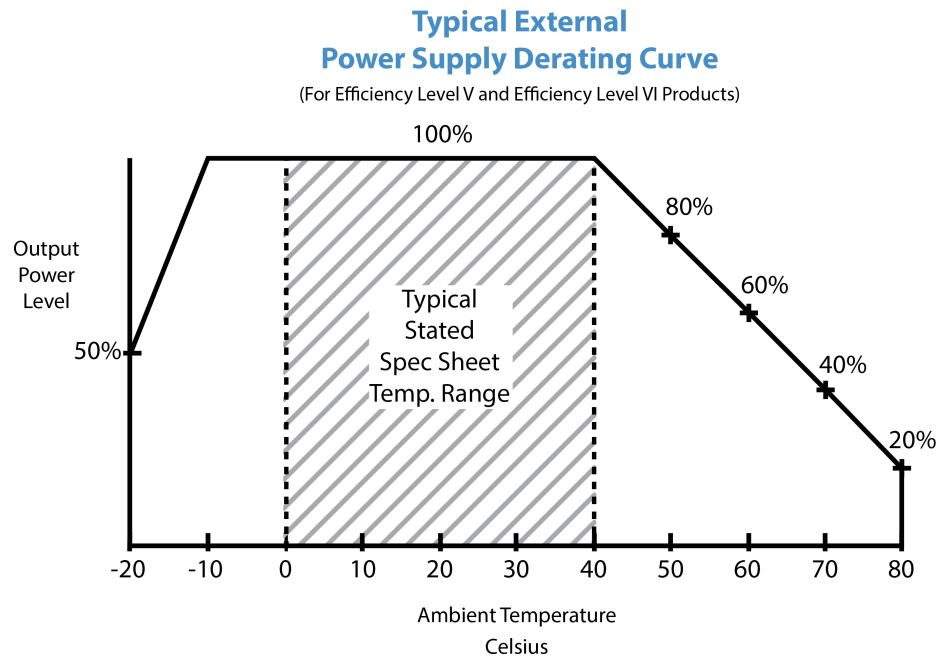


PROPRIETARY INFORMATION
PROPRIETARY OF GLOBTEK, INC. ANY REPRODUCTION, DISCLOSURE OR USE OF THIS DRAWING, IN WHOLE OR IN PART, IS HEREBY PROHIBITED EXCEPT AS SPECIFIED IN WRITING BY GLOBTEK, INC. © GlobTek, Inc. 2015 - 2022
guest /08/28/2022 5:42:29 PM

GlobTek, Inc.
www.globtek.com
186 Veterans Drive,
Northvale, NJ 07647
Tel. (201) 784-1000
Fax (201) 784-0111

| | |
|---|---|
| Drawing Title: GT-46180-1809, ICT/ITE Power Supply, Efficiency Level: USA DOE Level VI / Eco-design Directive 2009/125/EC, (EU) 2019/1782, Case Color/Style: GlobTek Black, Wall Plug-in, Regulated Switchmode AC-DC Power Supply AC Adaptor, Input Rating: 100-240V~, 50-60 Hz, Interchangeable Blades http://en.globtek.com/interchangeable-blades.php, Output Rating: 18W, 9.0V@2.0A, Output Configuration: 1530 mm, 18/2 Cond, UL 2468, Female Barrel 5.5 * 2.5 * 11mm with internal Spring Clip and Locking Notch or Equal, Ferrite: Core Size: 12*20*7.3mm, GlobTek Black, GT Cord # C2614, Pin Out: Center Positive (+V), symbol compliant with IEC 60417 symbol no. 5926, Blades/Input Cord: (Order Separately), Approvals: CB 62368; Saudi; 230V CoC Tier 2; EAC; NOM (5,9,12,15,18,20,24V only); Saudi; Israel (12V only); South Africa; UKCA; cULus; RCM; NrCAN (12V only); GEMS; LPS 62368; Morocco; Morocco; Malaysia; CCC; CB 60950; CE; China RoHS; Double Insulation; IP40; Level VI; LPS 60950; PSE; RoHS; Ukraine; VCCI; WEEE; EAC; cULus; Taiwan BSMI (12V, 7.5V only); Singapore (12V); IRAM; Korea (9V, 12V, 15V Only); Singapore (7.5V); India (12V only); FCC; Korea (5V, 6V, 7V, 7.5V Only); PSE; PSE; PSE; CAN ICES-3; South Africa; | |
| Model No. GT-46180-1809 | |
| Part No./Ordering No. WR9QD2000LCP-N(R6B) | Rev D |

## INPUT CONFIGURATION

(F1) Class II / Double Insulated

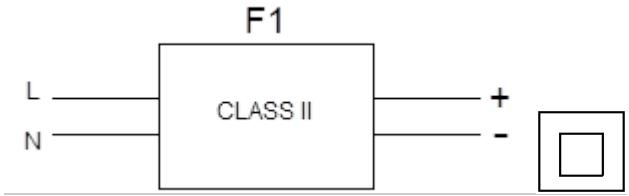


Alternate grounding configurations available upon request.

Blades/Cord Included:None:(Order Separately)

Blades/Cord Installed:None:(Order Separately)

Blade Options for Q Series Wall Plug-in Power Supplies

Data Sheet: http://en.globtek.com/interchangeable-blades.php
Insertion Instructions: http://www.globtek.com/pdf/Instructions-Interchangeable-Blades.pdf
Video: Q-Blade Style Instruction Video

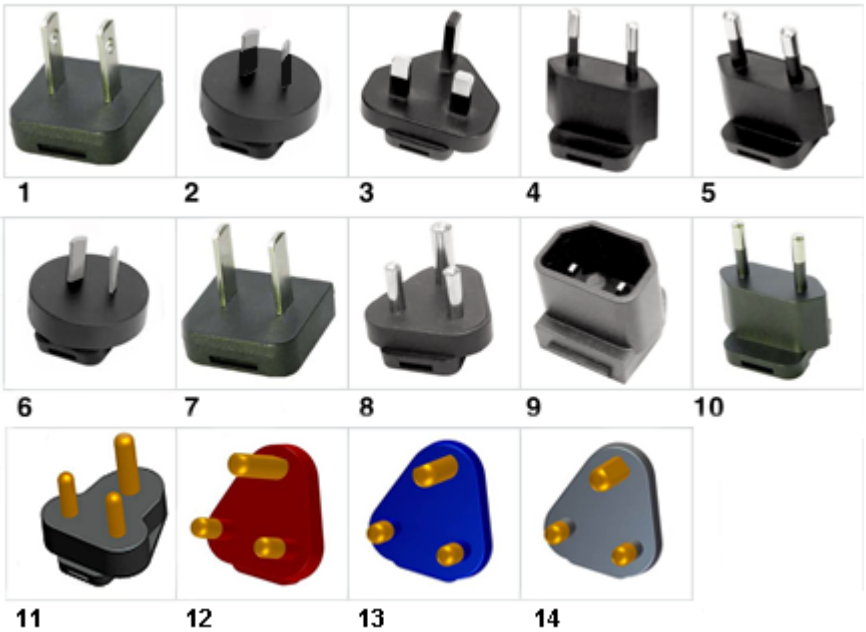


PROPRIETARY INFORMATION
PROPRIETARY OF GLOBTEK, INC. ANY REPRODUCTION, DISCLOSURE OR USE OF THIS DRAWING, IN WHOLE OR IN PART, IS HEREBY PROHIBITED EXCEPT AS SPECIFIED IN WRITING BY GLOBTEK, INC. © GlobTek, Inc. 2015 - 2022
guest /08/28/2022 5:42:29 PM

GlobTek, Inc.
www.globtek.com
186 Veterans Drive,
Northvale, NJ 07647
Tel. (201) 784-1000
Fax (201) 784-0111

| | |
|---|---|
| Drawing Title: GT-46180-1809, ICT/ITE Power Supply, Efficiency Level: USA DOE Level VI / Eco-design Directive 2009/125/EC, (EU) 2019/1782, Case Color/Style: GlobTek Black, Wall Plug-in, Regulated Switchmode AC-DC Power Supply AC Adaptor, Input Rating: 100-240V~, 50-60 Hz, Interchangeable Blades http://en.globtek.com/interchangeable-blades.php, Output Rating: 18W, 9.0V@2.0A, Output Configuration: 1530 mm, 18/2 Cond, UL 2468, Female Barrel 5.5 * 2.5 * 11mm with internal Spring Clip and Locking Notch or Equal, Ferrite: Core Size: 12*20*7.3mm, GlobTek Black, GT Cord # C2614, Pin Out: Center Positive (+V), symbol compliant with IEC 60417 symbol no. 5926, Blades/Input Cord: (Order Separately), Approvals: CB 62368; Saudi; 230V CoC Tier 2; EAC; NOM (5,9,12,15,18,20,24V only); Saudi; Israel (12V only); South Africa; UKCA; cULus; RCM; NrCAN (12V only); GEMS; LPS 62368; Morocco; Morocco; Malaysia; CCC; CB 60950; CE; China RoHS; Double Insulation; IP40; Level VI; LPS 60950; PSE; RoHS; Ukraine; VCCI; WEEE; EAC; cULus; Taiwan BSMI (12V, 7.5V only); Singapore (12V); IRAM; Korea (9V, 12V, 15V Only); Singapore (7.5V); India (12V only); FCC; Korea (5V, 6V, 7V, 7.5V Only); PSE; PSE; PSE; CAN ICES-3; South Africa; | |
| Model No. GT-46180-1809 | |
| Part No./Ordering No. WR9QD2000LCP-N(R6B) | Rev D |

INPUT CONNECTOR: Q-Socket (below are available blades configurations which are "not included" (unless stated above); can be purchased separately, package with power supply or as a separate "Q-KIT" if specified

01. United States / Canada / Japan NEMA 1-15P/ IEC PLUG Type A [WORKS IN PLUG B] configuration: NA 2 blades, Class II; US/CA/JP P/N: Q-NA(R)
02. Australian AS 3112 configuration: SAA 2 blade/ IEC TYPE I, Class II; AU P/N: Q-SAA(R)
03. UK BS 1363 configuration: UK 3 blade with dummy Ground/ IEC TYPE G, Class II; GB P/N: Q-UK(R)
04. European CEE 7/16 configuration: Europlug 2 pins/ IEC TYPE C [WORKS IN TYPE E&F], Class II; EU P/N: Q-EU(R)
05. Korean KS C8305 configuration: 2 pins/SIMILAR TO IEC TYPE C, Class II; KR P/N: Q-KR(R)
06. Argentina IRAM 2073 configuration: 2 blades/SIMILAR TO IEC TYPE I; AR P/N: Class II Q-AR(R)
07. China GB 2099 configuration: 2 blades/SIMILAR TO TYPE A, Class II; CN P/N:Q-CN(R)
08. India IS 1293 6A/BS546 configuration: 5A, 3 pins with Dummy Ground, Class II/IEC TYPE D; IN P/N: Q-IN(R)
09. IEC60320/C18 Inlet, Class II; P/N: Q-C18(R)
10. Brazilian NBR6147 configuration: 2 pins, Class II;SIMILAR TO IEC TYPE C BR P/N: Q-BR(R)
11. South Africa SABS164-1 and India IS 1293, IS694, 16A type plug, 3 round prongs, Class II + dummy ground, IEC TYPE M P/N: Q-SANS164-1-16A(R)
12. South Africa SABS164-4, 3 round prongs with a notched prong @ 0º, Class II + dummy ground, IEC TYPE M Red, P/N:
Q-SANS164-4C-16A(R)
13. South Africa SABS164-4, 3 round prongs with a notched prong @ -53º, Class II + dummy ground, Blue, IEC TYPE M, P/N:
Q-SANS164-4L-16A(R)
14. South Africa SABS164-4, 3 round prongs with a notched prong @ +53º, Class II + dummy ground, Black,IEC TYPE M P/N:
Q-SANS164-4R-16A(R)

Kits

01. Q-KIT: 1,2,3,4 above
02. Q-KIT-INTL: 2,3,4 above
03. Q-KIT-6: 1,2,3,4,5,6 above
04. Q-KIT-7: 1,2,3,4,5,6,7 above
05. Q-KIT-8: 1,2,3,4,5,6,7,8 above

PROPRIETARY INFORMATION
PROPRIETARY OF GLOBTEK, INC. ANY REPRODUCTION, DISCLOSURE OR USE OF THIS DRAWING, IN WHOLE OR IN PART, IS HEREBY PROHIBITED EXCEPT AS SPECIFIED IN WRITING BY GLOBTEK, INC. © GlobTek, Inc. 2015 - 2022
guest /08/28/2022 5:42:29 PM

GlobTek, Inc.
www.globtek.com
186 Veterans Drive,
Northvale, NJ 07647
Tel. (201) 784-1000
Fax (201) 784-0111

Drawing Title: GT-46180-1809, ICT/ITE Power Supply, Efficiency Level: USA DOE Level VI / Eco-design Directive 2009/125/EC, (EU) 2019/1782, Case Color/Style: GlobTek Black, Wall Plug-in, Regulated Switchmode AC-DC Power Supply AC Adaptor, Input Rating: 100-240V~, 50-60 Hz, Interchangeable Blades http://en.globtek.com/interchangeable-blades.php, Output Rating: 18W, 9.0V@2.0A, Output Configuration: 1530 mm, 18/2 Cond, UL 2468, Female Barrel 5.5 * 2.5 * 11mm with internal Spring Clip and Locking Notch or Equal, Ferrite: Core Size: 12*20*7.3mm, GlobTek Black, GT Cord # C2614, Pin Out: Center Positive (+V), symbol compliant with IEC 60417 symbol no. 5926, Blades/Input Cord: (Order Separately), Approvals: CB 62368; Saudi; 230V CoC Tier 2; EAC; NOM (5,9,12,15,18,20,24V only); Saudi; Israel (12V only); South Africa; UKCA; cULus; RCM; NrCAN (12V only); GEMS; LPS 62368; Morocco; Morocco; Malaysia; CCC; CB 60950; CE; China RoHS; Double Insulation; IP40; Level VI; LPS 60950; PSE; RoHS; Ukraine; VCCI; WEEE; EAC; cULus; Taiwan BSMI (12V, 7.5V only); Singapore (12V); IRAM; Korea (9V, 12V, 15V Only); Singapore (7.5V); India (12V only); FCC; Korea (5V, 6V, 7V, 7.5V Only); PSE; PSE; PSE; CAN ICES-3; South Africa;

Model No. GT-46180-1809

Part No./Ordering No. WR9QD2000LCP-N(R6B) Rev D

## OUTPUT CORD AND CONNECTOR: LCL/C2614

ACTUAL CONNECTORS, OVERMOLDS, FERRITES MAY VARY SLIGHTLY FROM THE PICTURE BELOW

| | |
|---|---|
| CABLE TYPE | UL 2468 |
| CABLE LENGTH (mm) | 1530 |
| CABLE TOLERANCE (mm) | ± 100 |
| WIRE GAUGE (AWG) | 18 |
| CONDUCTORS | 2 |
| HANK DIMENSION (mm) | 70 ±10 |
| CABLE / CONNECTOR OVERMOLD COLOR | GlobTek Black |
| FERRITE TYPE / DIMENSION | Core Size: 12*20*7.3mm |
| FERRITE # OF TURNS(Definition) | 2 Pass thru core (1 turns) |
| FERRITE DIMENSION FROM STRAIN RELIEF | 50 ± 10 |
| FERRITE DIMENSION FROM PLUG | N/A |
| PLUG TYPE | Female Barrel 5.5 * 2.5 * 11mm with internal Spring Clip and Locking Notch or Equal |
| OUTPUT CONNECTOR GENDER | |
| OVERMOLDED | |
| OVER MOLD ORIENTATION | Straight |
| CONNECTOR PIN OUT: | Center Positive (+V), symbol compliant with IEC 60417 symbol no. 5926 |
| ADDITIONAL REQUIREMENTS | |

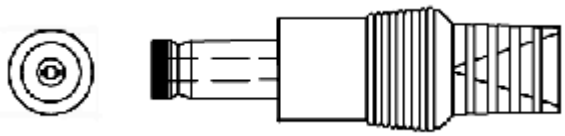

ADDITIONAL OUTPUT PLUG OPTIONS ARE AVAILABLE AT https://www.globtek.com/connectors/
STANDARD PLUGS AND CONNECTORS CAN BE SEEN ONLINE AT https://www.globtek.com/connectors/
CALCULATE VOLTAGE REGULATION/DROP WITH OUR ONLINE CALCULATOR: https://en.globtek.com/output-cable-regulation-calculator/

PROPRIETARY INFORMATION
PROPRIETARY OF GLOBTEK, INC. ANY REPRODUCTION, DISCLOSURE OR USE OF THIS DRAWING, IN WHOLE OR IN PART, IS HEREBY PROHIBITED EXCEPT AS SPECIFIED IN WRITING BY GLOBTEK, INC. © GlobTek, Inc. 2015 - 2022
guest /08/28/2022 5:42:29 PM

GlobTek, Inc.
www.globtek.com
186 Veterans Drive,
Northvale, NJ 07647
Tel. (201) 784-1000
Fax (201) 784-0111

| | |
|---|---|
| Drawing Title: GT-46180-1809, ICT/ITE Power Supply, Efficiency Level: USA DOE Level VI / Eco-design Directive 2009/125/EC, (EU) 2019/1782, Case Color/Style: GlobTek Black, Wall Plug-in, Regulated Switchmode AC-DC Power Supply AC Adaptor, Input Rating: 100-240V~, 50-60 Hz, Interchangeable Blades http://en.globtek.com/interchangeable-blades.php, Output Rating: 18W, 9.0V@2.0A, Output Configuration: 1530 mm, 18/2 Cond, UL 2468, Female Barrel 5.5 * 2.5 * 11mm with internal Spring Clip and Locking Notch or Equal, Ferrite: Core Size: 12*20*7.3mm, GlobTek Black, GT Cord # C2614, Pin Out: Center Positive (+V), symbol compliant with IEC 60417 symbol no. 5926, Blades/Input Cord: (Order Separately), Approvals: CB 62368; Saudi; 230V CoC Tier 2; EAC; NOM (5,9,12,15,18,20,24V only); Saudi; Israel (12V only); South Africa; UKCA; cULus; RCM; NrCAN (12V only); GEMS; LPS 62368; Morocco; Morocco; Malaysia; CCC; CB 60950; CE; China RoHS; Double Insulation; IP40; Level VI; LPS 60950; PSE; RoHS; Ukraine; VCCI; WEEE; EAC; cULus; Taiwan BSMI (12V, 7.5V only); Singapore (12V); IRAM; Korea (9V, 12V, 15V Only); Singapore (7.5V); India (12V only); FCC; Korea (5V, 6V, 7V, 7.5V Only); PSE; PSE; PSE; CAN ICES-3; South Africa; | |
| Model No. GT-46180-1809 | |
| Part No./Ordering No. WR9QD2000LCP-N(R6B) | Rev D |

## OUTPUT CONNECTOR HOOK UP

TO ADDRESS SYSTEM-LEVEL EMI CONCERNS, FERRITE CHOKES/BEADS MAY BE ADDED/REVISED UPON REQUEST. A SAMPLE KIT OF GLOBTEK'S STANDARD FERRITES IS AVAILABLE UNDER GLOBTEK P/N: EMI-MITIGATION-KIT1

FOR ADDITIONAL INFORMATION, PLEASE READ OUR WHITE PAPER AT:
https://en.globtek.com/technical-articles/ferrite-kit-radiated-emi-suppression-kit-for-globtek-power-supplies-cable-assemblies

PROPRIETARY INFORMATION
PROPRIETARY OF GLOBTEK, INC. ANY REPRODUCTION, DISCLOSURE OR USE OF THIS DRAWING, IN WHOLE OR IN PART, IS HEREBY PROHIBITED EXCEPT AS SPECIFIED IN WRITING BY GLOBTEK, INC. © GlobTek, Inc. 2015 - 2022
guest /08/28/2022 5:42:29 PM

GlobTek, Inc.
www.globtek.com
186 Veterans Drive,
Northvale, NJ 07647
Tel. (201) 784-1000
Fax (201) 784-0111

Drawing Title: GT-46180-1809, ICT/ITE Power Supply, Efficiency Level: USA DOE Level VI / Eco-design Directive 2009/125/EC, (EU) 2019/1782, Case Color/Style: GlobTek Black, Wall Plug-in, Regulated Switchmode AC-DC Power Supply AC Adaptor, Input Rating: 100-240V~, 50-60 Hz, Interchangeable Blades http://en.globtek.com/interchangeable-blades.php, Output Rating: 18W, 9.0V@2.0A, Output Configuration: 1530 mm, 18/2 Cond, UL 2468, Female Barrel 5.5 * 2.5 * 11mm with internal Spring Clip and Locking Notch or Equal, Ferrite: Core Size: 12*20*7.3mm, GlobTek Black, GT Cord # C2614, Pin Out: Center Positive (+V), symbol compliant with IEC 60417 symbol no. 5926, Blades/Input Cord: (Order Separately), Approvals: CB 62368; Saudi; 230V CoC Tier 2; EAC; NOM (5,9,12,15,18,20,24V only); Saudi; Israel (12V only); South Africa; UKCA; cULus; RCM; NrCAN (12V only); GEMS; LPS 62368; Morocco; Morocco; Malaysia; CCC; CB 60950; CE; China RoHS; Double Insulation; IP40; Level VI; LPS 60950; PSE; RoHS; Ukraine; VCCI; WEEE; EAC; cULus; Taiwan BSMI (12V, 7.5V only); Singapore (12V); IRAM; Korea (9V, 12V, 15V Only); Singapore (7.5V); India (12V only); FCC; Korea (5V, 6V, 7V, 7.5V Only); PSE; PSE; PSE; CAN ICES-3; South Africa;

Model No. GT-46180-1809

Part No./Ordering No. WR9QD2000LCP-N(R6B) | Rev D

## LABEL:L-1186

| | |
|---|---|
| LABEL P/N: | Standard GT |
| MATERIAL: | Flat Thermal Transfer, Imprintable, Polyester Label and/or Pad Printed and/or Molded, and/or Laser Engraved in the case |
| BACKGROUND COLOR: | Black if housing is Black, White or Silver if housing is White or Gray. |
| TEXT COLOR: | White or Silver if label is Black Background for Black housing. Black if label is White or Silver background and Housing is White or Gray. |
| LABEL WIDTH (mm): | 29.8 |
| LABEL HEIGHT (mm): | 20.8 |
| SPECIAL BARCODE LABEL MATERIAL: | No |

Below is the minimum information which will appear on the label. NOTE: in the logo area additional/actual positioning of symbols and text is subjected to change as per agency updates/requirements or additional model approvals become available.
Regulatory certifications/label markings may be in logo area on the label or molded into the case housing outside the label area.
Information will be shown via label and/or pad printed and/or molded and/or laser engraved in the case. * Date code markings at GlobTek option
.

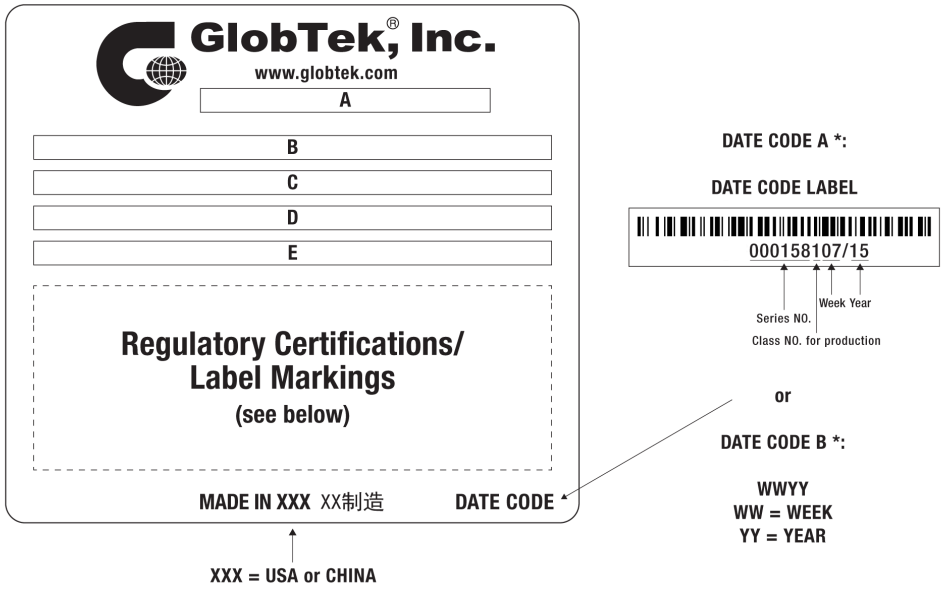


A=ICT/ITE Power Supply
B=P/N: (料号) WR9QD2000LCP-N(R6B)
C=Model (型号) GT-46180-1809
D=Input (输入)100-240V~, 50-60 Hz, 0.6 A
E=Output (输出)9.0 V ⎓ 2.0 A, 18.0W

PROPRIETARY INFORMATION
PROPRIETARY OF GLOBTEK, INC. ANY REPRODUCTION, DISCLOSURE OR USE OF THIS DRAWING, IN WHOLE OR IN PART, IS HEREBY PROHIBITED EXCEPT AS SPECIFIED IN WRITING BY GLOBTEK, INC. © GlobTek, Inc. 2015 - 2022
guest /08/28/2022 5:42:29 PM

GlobTek, Inc.
www.globtek.com
186 Veterans Drive,
Northvale, NJ 07647
Tel. (201) 784-1000
Fax (201) 784-0111

| | |
|---|---|
| Drawing Title: GT-46180-1809, ICT/ITE Power Supply, Efficiency Level: USA DOE Level VI / Eco-design Directive 2009/125/EC, (EU) 2019/1782, Case Color/Style: GlobTek Black, Wall Plug-in, Regulated Switchmode AC-DC Power Supply AC Adaptor, Input Rating: 100-240V~, 50-60 Hz, Interchangeable Blades http://en.globtek.com/interchangeable-blades.php, Output Rating: 18W, 9.0V@2.0A, Output Configuration: 1530 mm, 18/2 Cond, UL 2468, Female Barrel 5.5 * 2.5 * 11mm with internal Spring Clip and Locking Notch or Equal, Ferrite: Core Size: 12*20*7.3mm, GlobTek Black, GT Cord # C2614, Pin Out: Center Positive (+V), symbol compliant with IEC 60417 symbol no. 5926, Blades/Input Cord: (Order Separately), Approvals: CB 62368; Saudi; 230V CoC Tier 2; EAC; NOM (5,9,12,15,18,20,24V only); Saudi; Israel (12V only); South Africa; UKCA; cULus; RCM; NrCAN (12V only); GEMS; LPS 62368; Morocco; Morocco; Malaysia; CCC; CB 60950; CE; China RoHS; Double Insulation; IP40; Level VI; LPS 60950; PSE; RoHS; Ukraine; VCCI; WEEE; EAC; cULus; Taiwan BSMI (12V, 7.5V only); Singapore (12V); IRAM; Korea (9V, 12V, 15V Only); Singapore (7.5V); India (12V only); FCC; Korea (5V, 6V, 7V, 7.5V Only); PSE; PSE; PSE; CAN ICES-3; South Africa; | |
| Model No. GT-46180-1809 | |
| Part No./Ordering No. WR9QD2000LCP-N(R6B) | Rev D |

| | |
|---|---|
| AGENCY ONLINE DOCUMENTS | http://www.globtek.info/certs/GT-46180-18VV-X.X/ |
| CE EC-Declaration for Medical | Contact GlobTek for more information |
| CE EC-Declaration for Industrial/Commercial/ITE | http://globtek.force.com/models/ec_declaration_product?id=01ta0000005nYdr&i=2 |
| CE EC-Declaration for Household | Contact GlobTek for more information |
| UKCA-Declaration for Medical | Contact GlobTek for more information |
| UKCA-Declaration for Industrial/Commercial/ITE | http://globtek.force.com/models/ukca_declaration_product?id=01ta0000005nYdr&i=2 |
| UKCA-Declaration for Household | Contact GlobTek for more information |
| Morocco SDoC Declaration | https://globtek.secure.force.com/models/Morocco_SDoC_Declaration?id=a0Oa000000MFCdnEAH |
| RoHS/RoHS3 Declaration | https://www.globtek.com/pdf/rohs_cert/01ta0000005nYdrAAE |
| REACH Declaration | https://www.globtek.com/pdf/iso_certificates/REACH.pdf |
| Conflict Minerals Declaration | https://www.globtek.com/pdf/conflict-minerals.pdf |
| Prop 65 Statement | https://en.globtek.com/prop-65-statement.pdf |

IPXY rating is based on 3rd party testing and customers should check suitability and test system level IPXY rating before ordering.

## Regulatory Certifications/Label Markings

Below follows a link to the latest regulatory certifications and marks for this specific product. National standards as well as certification schemes are constantly changing and so is the set of certification marks and symbols applicable to this product. Various standards, marks and symbols, and certificates are subject to change at any time without notice.

Additional standards or unique country certifications are available upon request. Please contact Globtek to request a quotation.

| | |
|---|---|
| LATEST PRODUCT/MODEL CERTIFICATIONS: | https://www.globtek.com/datasheet/w71010 |
| AGENCY ONLINE DOCUMENTS: | http://www.globtek.info/certs/GT-46180-18VV-X.X/ |
|  | (F1) Class II / Double Insulated |
| 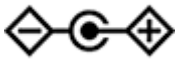 | Center Positive (+V), symbol compliant with IEC 60417 symbol no. 5926 |

PROPRIETARY INFORMATION
PROPRIETARY OF GLOBTEK, INC. ANY REPRODUCTION, DISCLOSURE OR USE OF THIS DRAWING, IN WHOLE OR IN PART, IS HEREBY PROHIBITED EXCEPT AS SPECIFIED IN WRITING BY GLOBTEK, INC. © GlobTek, Inc. 2015 - 2022
guest /08/28/2022 5:42:29 PM

GlobTek, Inc.
www.globtek.com
186 Veterans Drive,
Northvale, NJ 07647
Tel. (201) 784-1000
Fax (201) 784-0111

| | |
|---|---|
| Drawing Title: GT-46180-1809, ICT/ITE Power Supply, Efficiency Level: USA DOE Level VI / Eco-design Directive 2009/125/EC, (EU) 2019/1782, Case Color/Style: GlobTek Black, Wall Plug-in, Regulated Switchmode AC-DC Power Supply AC Adaptor, Input Rating: 100-240V~, 50-60 Hz, Interchangeable Blades http://en.globtek.com/interchangeable-blades.php, Output Rating: 18W, 9.0V@2.0A, Output Configuration: 1530 mm, 18/2 Cond, UL 2468, Female Barrel 5.5 * 2.5 * 11mm with internal Spring Clip and Locking Notch or Equal, Ferrite: Core Size: 12*20*7.3mm, GlobTek Black, GT Cord # C2614, Pin Out: Center Positive (+V), symbol compliant with IEC 60417 symbol no. 5926, Blades/Input Cord: (Order Separately), Approvals: CB 62368; Saudi; 230V CoC Tier 2; EAC; NOM (5,9,12,15,18,20,24V only); Saudi; Israel (12V only); South Africa; UKCA; cULus; RCM; NrCAN (12V only); GEMS; LPS 62368; Morocco; Morocco; Malaysia; CCC; CB 60950; CE; China RoHS; Double Insulation; IP40; Level VI; LPS 60950; PSE; RoHS; Ukraine; VCCI; WEEE; EAC; cULus; Taiwan BSMI (12V, 7.5V only); Singapore (12V); IRAM; Korea (9V, 12V, 15V Only); Singapore (7.5V); India (12V only); FCC; Korea (5V, 6V, 7V, 7.5V Only); PSE; PSE; PSE; CAN ICES-3; South Africa; | |
| Model No. GT-46180-1809 | |
| Part No./Ordering No. WR9QD2000LCP-N(R6B) | Rev D |

## PACKAGING

| | |
|---|---|
| Packing Spec P/N: | Standard WPI, Individually Box, User manual |
| Box Qty: | 80 |
| Gift Box Size (mm): | 90.5*73*53 |
| Gift Box Color: | White |
| Master Carton Size (mm): | 388 x 380 x 245 |
| Master Carton Cubic Volume ($m^3$): | 0.04 |
| Master GW (Kg): | 15.2 kg |
| BLADES INCLUDED: | None: (Order Separately) |
| BLADE/CORD INSTALLED: | None: (Order Separately) |
| USER MANUAL*: | 809-PSUQKITUSERMANUAL on A4 paper |
| USER MANUAL WEB LINK: | https://en.globtek.com/pdf/809-PSUQKITUSERMANUAL.jpg |

* This specification sheet is considered the user manual for all applications. It is expected that the buyer of this product will use it to formulate their own user manual for their end product and a user manual specifically for the power adapter is not usually required. If a user manual is not specifically listed above then none will be provided with this unit.

If specific packaging is required, this section must specify all requirements and note “no exceptions”. If this section does not specify packaging, it is subject to change without notice at GlobTek’s discretion

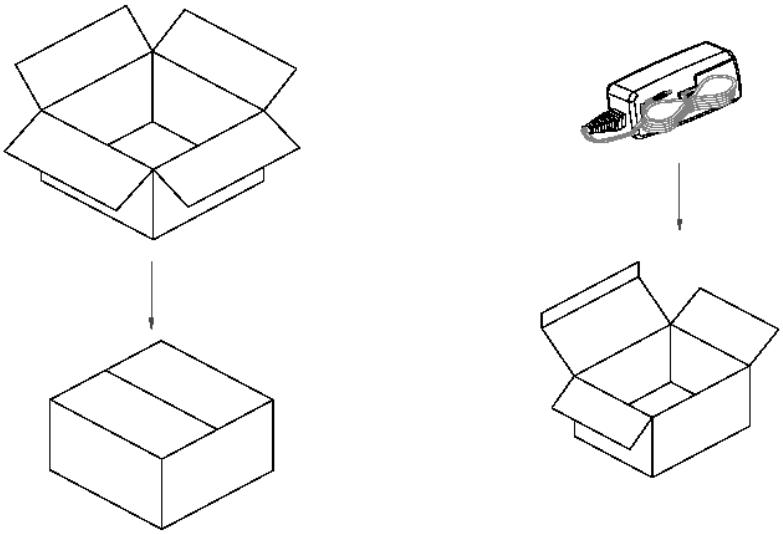

PROPRIETARY INFORMATION
PROPRIETARY OF GLOBTEK, INC. ANY REPRODUCTION, DISCLOSURE OR USE OF THIS DRAWING, IN WHOLE OR IN PART, IS HEREBY PROHIBITED EXCEPT AS SPECIFIED IN WRITING BY GLOBTEK, INC. © GlobTek, Inc. 2015 - 2022
guest /08/28/2022 5:42:29 PM

GlobTek, Inc.
www.globtek.com
186 Veterans Drive,
Northvale, NJ 07647
Tel. (201) 784-1000
Fax (201) 784-0111

| | |
|---|---|
| Drawing Title: GT-46180-1809, ICT/ITE Power Supply, Efficiency Level: USA DOE Level VI / Eco-design Directive 2009/125/EC, (EU) 2019/1782, Case Color/Style: GlobTek Black, Wall Plug-in, Regulated Switchmode AC-DC Power Supply AC Adaptor, Input Rating: 100-240V~, 50-60 Hz, Interchangeable Blades http://en.globtek.com/interchangeable-blades.php, Output Rating: 18W, 9.0V@2.0A, Output Configuration: 1530 mm, 18/2 Cond, UL 2468, Female Barrel 5.5 * 2.5 * 11mm with internal Spring Clip and Locking Notch or Equal, Ferrite: Core Size: 12*20*7.3mm, GlobTek Black, GT Cord # C2614, Pin Out: Center Positive (+V), symbol compliant with IEC 60417 symbol no. 5926, Blades/Input Cord: (Order Separately), Approvals: CB 62368; Saudi; 230V CoC Tier 2; EAC; NOM (5,9,12,15,18,20,24V only); Saudi; Israel (12V only); South Africa; UKCA; cULus; RCM; NrCAN (12V only); GEMS; LPS 62368; Morocco; Morocco; Malaysia; CCC; CB 60950; CE; China RoHS; Double Insulation; IP40; Level VI; LPS 60950; PSE; RoHS; Ukraine; VCCI; WEEE; EAC; cULus; Taiwan BSMI (12V, 7.5V only); Singapore (12V); IRAM; Korea (9V, 12V, 15V Only); Singapore (7.5V); India (12V only); FCC; Korea (5V, 6V, 7V, 7.5V Only); PSE; PSE; PSE; CAN ICES-3; South Africa; | |
| Model No. GT-46180-1809 | |
| Part No./Ordering No. WR9QD2000LCP-N(R6B) | Rev D |

## INSTRUCTIONS TO THE OEM SYSTEMS ENGINEER

It is the responsibility of the OEM systems engineer to provide the end system user instructions and warnings for the use of this product in the end system.

If an input cord is required for this product, AC Mains voltage should be provided to the power supply by a power supply cord approved to the national standards of the country in which it will be used.

This product is not designed to be repaired. No serviceable parts inside. A blown internal fuse is an indication of catastrophic failure of circuit component(s). If a Failure Analysis is required for a failed power supply/battery charger, please return the damaged unit to GlobTek for an accurate determination of the root cause of the failure.

EMC Compliance of the complete OEM product, including the GlobTek power supply/battery charger needs to be verified by the OEM systems engineer.

## INSTRUCTION SHEET

Q Blades Instruction Sheet (not required to be packaged with product)

Insertion Instructions: http://www.globtek.com/pdf/Instructions-Interchangeable-Blades.pdf

This manual is Provided to customer within the product specification - it is the responsibility of the OEM/customer to provide the end system user instructions + warnings for the use of this product in the end system. By accepting this specification the customer/OEM Agrees to these terms.

## USER MANUAL FOR Q-BLADE SERIES SWITCHING POWER SUPPLIES

Manual del Usuario. Fuentes de Alimentación Series Q-Blade

WARNING! RISK OF FIRE! SHOCK HAZARD!: To prevent electric shock, do not remove the cover. No user-serviceable parts inside. This unit contains hazardous voltages and should only be opened by a trained and qualified technician. Do not use if bent, cracked, modifed or compromised. To avoid the possibility of electric shock, disconnect electric power to the product before connecting or disconnecting.

Advertencia! Riesgo de Fuego! Peligro de Choque eléctrico! No contiene dentro componentes servibles para el usuario. Desconecte el cable de alimentación antes de quitar la cubierta.

INDOOR USE ONLY!

Únicamente para uso en el interior.

POWER SUPPLY BLADE/CORD: AC Mains voltage should be provided to the power supply by a power supply cords approved to the national standards in which it will be used. Please use the below table as a guideline for Suitable Power cords.

PROPRIETARY INFORMATION
PROPRIETARY OF GLOBTEK, INC. ANY REPRODUCTION, DISCLOSURE OR USE OF THIS DRAWING, IN WHOLE OR IN PART, IS HEREBY PROHIBITED EXCEPT AS SPECIFIED IN WRITING BY GLOBTEK, INC. © GlobTek, Inc. 2015 - 2022
guest /08/28/2022 5:42:29 PM

GlobTek, Inc.
www.globtek.com
186 Veterans Drive,
Northvale, NJ 07647
Tel. (201) 784-1000
Fax (201) 784-0111

| | |
|---|---|
| Drawing Title: GT-46180-1809, ICT/ITE Power Supply, Efficiency Level: USA DOE Level VI / Eco-design Directive 2009/125/EC, (EU) 2019/1782, Case Color/Style: GlobTek Black, Wall Plug-in, Regulated Switchmode AC-DC Power Supply AC Adaptor, Input Rating: 100-240V~, 50-60 Hz, Interchangeable Blades http://en.globtek.com/interchangeable-blades.php, Output Rating: 18W, 9.0V@2.0A, Output Configuration: 1530 mm, 18/2 Cond, UL 2468, Female Barrel 5.5 * 2.5 * 11mm with internal Spring Clip and Locking Notch or Equal, Ferrite: Core Size: 12*20*7.3mm, GlobTek Black, GT Cord # C2614, Pin Out: Center Positive (+V), symbol compliant with IEC 60417 symbol no. 5926, Blades/Input Cord: (Order Separately), Approvals: CB 62368; Saudi; 230V CoC Tier 2; EAC; NOM (5,9,12,15,18,20,24V only); Saudi; Israel (12V only); South Africa; UKCA; cULus; RCM; NrCAN (12V only); GEMS; LPS 62368; Morocco; Morocco; Malaysia; CCC; CB 60950; CE; China RoHS; Double Insulation; IP40; Level VI; LPS 60950; PSE; RoHS; Ukraine; VCCI; WEEE; EAC; cULus; Taiwan BSMI (12V, 7.5V only); Singapore (12V); IRAM; Korea (9V, 12V, 15V Only); Singapore (7.5V); India (12V only); FCC; Korea (5V, 6V, 7V, 7.5V Only); PSE; PSE; PSE; CAN ICES-3; South Africa; | |
| Model No. GT-46180-1809 | |
| Part No./Ordering No. WR9QD2000LCP-N(R6B) | Rev D |

CABLE DE ALIMENTACIÓN: El voltaje de la CA debe proporcionarse a la fuente de alimentación mediante los cables de alimentación aprobados conforme a las normas nacionales según las cuales será utilizada. Utilice por favor la tabla mencionada aquí abajo como guía para los cables eléctricos adecuados.

1. Class II model NEMA 1-15P AC power plug with 2 prongs, Q-NA(R)
2. Australian AS 3112 configuration: SAA 2 pins Class II, Q-SAA(R)
3. UK BS 1363 configuration: UK 2 pins Class II, Q-UK(R)
4. European CEE 7/16 configuration: Europlug 2 PINS, Class II, Q-EU(R)
5. Korean KS C8305 configuration: Q-KR(R)
6. Argentina IRAM 2073 configuration: 2 pins, Class II Q-AR(R)
7. China GR 2099 configuration: 2 pins, Class II Q-CN(R)
8. India configuration: 2 pins, Class II, Q-IN(R)
9. IEC320/C18 Inlet

FUSING: Internal fuse for Line is provided in the power supply. A blown internal fuse is an indication of catastrophic failure of circuit component(s). Repair must be performed by GlobTek, Inc. authorized personnel. Fuses must be replaced with same type and ratings per GlobTek internal documentation.

FUSIBLES: La fuente de alimentación provee un fusible interno para la línea. Un fusible interno quemado es un indicador de una falla catastrófica de los componentes del circuito. La reparación debe ser hecha por personal autorizado de GlobTek, Inc. Los fusibles se deben reemplazar por los mismos tipos y rangos que la documentación interna de GlobTek mencione.

PROPRIETARY INFORMATION
PROPRIETARY OF GLOBTEK, INC. ANY REPRODUCTION, DISCLOSURE OR USE OF THIS DRAWING, IN WHOLE OR IN PART, IS HEREBY PROHIBITED EXCEPT AS SPECIFIED IN WRITING BY GLOBTEK, INC. © GlobTek, Inc. 2015 - 2022
guest /08/28/2022 5:42:29 PM

GlobTek, Inc.
www.globtek.com
186 Veterans Drive,
Northvale, NJ 07647
Tel. (201) 784-1000
Fax (201) 784-0111

| | |
|---|---|
| Drawing Title: GT-46180-1809, ICT/ITE Power Supply, Efficiency Level: USA DOE Level VI / Eco-design Directive 2009/125/EC, (EU) 2019/1782, Case Color/Style: GlobTek Black, Wall Plug-in, Regulated Switchmode AC-DC Power Supply AC Adaptor, Input Rating: 100-240V~, 50-60 Hz, Interchangeable Blades http://en.globtek.com/interchangeable-blades.php, Output Rating: 18W, 9.0V@2.0A, Output Configuration: 1530 mm, 18/2 Cond, UL 2468, Female Barrel 5.5 * 2.5 * 11mm with internal Spring Clip and Locking Notch or Equal, Ferrite: Core Size: 12*20*7.3mm, GlobTek Black, GT Cord # C2614, Pin Out: Center Positive (+V), symbol compliant with IEC 60417 symbol no. 5926, Blades/Input Cord: (Order Separately), Approvals: CB 62368; Saudi; 230V CoC Tier 2; EAC; NOM (5,9,12,15,18,20,24V only); Saudi; Israel (12V only); South Africa; UKCA; cULus; RCM; NrCAN (12V only); GEMS; LPS 62368; Morocco; Morocco; Malaysia; CCC; CB 60950; CE; China RoHS; Double Insulation; IP40; Level VI; LPS 60950; PSE; RoHS; Ukraine; VCCI; WEEE; EAC; cULus; Taiwan BSMI (12V, 7.5V only); Singapore (12V); IRAM; Korea (9V, 12V, 15V Only); Singapore (7.5V); India (12V only); FCC; Korea (5V, 6V, 7V, 7.5V Only); PSE; PSE; PSE; CAN ICES-3; South Africa; | |
| Model No. GT-46180-1809 | |
| Part No./Ordering No. WR9QD2000LCP-N(R6B) | Rev D |

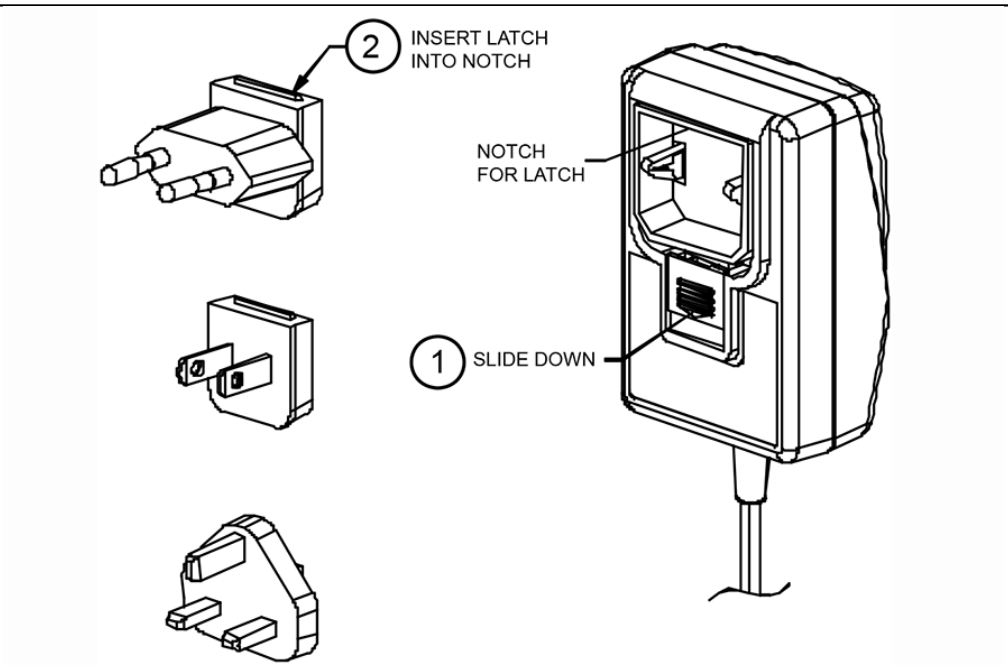


This symbol on an instrument indicates that the user should refer to the operating instructions located in the manual.

Please note:

The blades shown above are for representation of the installation process and do not indicate which AC blades are included with this power supply. Please reference the specifications “Power Supply Information” (page 2) and “Input Configuration (page 6) for information regarding the actual blade included with this power supply, if any.

PROPRIETARY INFORMATION
PROPRIETARY OF GLOBTEK, INC. ANY REPRODUCTION, DISCLOSURE OR USE OF THIS DRAWING, IN WHOLE OR IN PART, IS HEREBY PROHIBITED EXCEPT AS SPECIFIED IN WRITING BY GLOBTEK, INC. © GlobTek, Inc. 2015 - 2022
guest /08/28/2022 5:42:29 PM