TECHNICAL DATASHEET

CliQ DIN Rail Power Supply

24 V 60 W 1 Phase / DRP024V060W1AZ

Highlights & Features

- Universal AC input voltage range
- Power will not de-rate for the entire input voltage range
- Power Boost of 150% for 3 seconds
- Rugged and compact design (Vibration 5 G, Shock 30 G)
- Conforms to harmonics current IEC/EN 61000-3-2, Class A
- Wide operating temperature range -20°C to 80°C
- Overvoltage / Overcurrent / Over Temperature / Short Circuit Protections
- Certified according to IEC/EN/UL 62368-1

Safety Standards

CB Certified for worldwide use

Model Number: DRP024V060W1AZ
Unit Weight: 0.33 kg (0.73 lb)
Dimensions (L x W x D): 120.6 x 32 x 113 mm (4.75 x 1.26 x 4.45 inch)

General Description

The DRP024V060W1AZ is part of the CliQ DIN rail power supply series from one of the world's leading power supply companies, Delta Electronics Group, offers state-of-the-art designs made to withstand harsh industrial environments. Its rugged plastic casing has a compact body at only 32 mm, which is both shock and vibration resistant according to IEC 60068-2 standard. The DRP024V060W1AZ operates within a wide temperature range from -20°C to +80°C and universal AC input voltage range from 85 Vac to 264 Vac, the power will not de-rate for the entire input voltage range value. The single phase power supply unit includes overvoltage, overcurrent, over temperature and short circuit protections. The feature built-in Power Boost of 150% for 3 seconds enables reserve power to be always available for reliable startup of loads with high inrush current, thus eliminating the need of a more expensive power supply unit at higher power rating.

Model Information

CliQ DIN Rail Power Supply

Model Number	Input Voltage Range	Rated Output Voltage	Rated Output Current
DRP024V060W1AZ	85-264 Vac (120-375 Vdc)	24 Vdc	2.50 A

Model Numbering

DR	P	024V	060W	1	A	Z
DIN Rail	Power Supply	Output Voltage	Output Power	Single Phase	CliQ Series	Plastic Case

All parameters are specified at 25°C ambient and AC input unless otherwise indicated.
www.DeltaPSU.com (September 2021, Rev. 10)

CliQ DIN Rail Power Supply
24 V 60 W 1 Phase / DRP024V060W1AZ

Specifications

Input Ratings / Characteristics

Nominal Input Voltage		100-240 Vac
Input Voltage Range		85-264 Vac
Nominal Input Frequency		50-60 Hz
Input Frequency Range		47-63 Hz
DC Input Voltage Range*		120-375 Vdc
Input Current		< 1.10 A @ 115 Vac, < 0.70 A @ 230 Vac
Efficiency at 100% Load		> 86.0% @ 115 Vac, > 87.0% @ 230 Vac
Max Power Dissipation	0% load	< 0.6 W @ 115 Vac & < 1.2 W @ 230 Vac
	100% load	< 10 W @ 115 Vac & 230 Vac
Max Inrush Current (Cold Start)		< 40 A @ 115 Vac, < 80 A @ 230 Vac
Leakage Current		< 1 mA @ 240 Vac

*Safety approval according to IEC/EN/UL 60950-1 and IEC/EN/UL 62368-1.

Output Ratings / Characteristics**

Nominal Output Voltage	24 Vdc
Factory Set Point Tolerance	24 Vdc ± 2%
Output Voltage Adjustment Range	22-28 Vdc
Output Current	2.50 A (continuously operating at 24 V) 3.75 A (Power Boost for 3 seconds at 24 V, refer to the details in the Functions section)
Output Power	60 W (continuously operating at 24 V) 90 W (Power Boost for 3 seconds at 24 V, refer to the details in the Functions section)
Line Regulation	< 0.5% (@ 85-264 Vac input, 100% load)
Load Regulation	< 1.0% (@ 85-264 Vac input, 0-100% load)
PARD*** (20 MHz)	< 240 mVpp
Rise Time	< 100 ms @ nominal input (100% load)
Start-up Time	< 2,500 ms @ nominal input (100% load)
Hold-up Time	> 20 ms @ 115 Vac (100% load) > 125 ms @ 230 Vac (100% load)
Dynamic Response (Overshoot & Undershoot O/P Voltage)	± 5% @ 85-264 Vac input, 10-90% load (Slew Rate: 0.1 A/μs, 50% duty cycle @ 5 Hz to 1 KHz)
Start-up with Capacitive Loads	8,000 μF Max

**For power de-rating from 50°C to 80°C, see power de-rating on page 3.
***PARD is measured with an AC coupling mode, 5 cm wires, and in parallel with 0.1 μF ceramic capacitor.

CliQ DIN Rail Power Supply
24 V 60 W 1 Phase / DRP024V060W1AZ

Mechanical

Case Cover / Chassis		Plastic
Dimensions (L x W x D)		120.6 x 32 x 113 mm (4.75 x 1.26 x 4.45 inch)
Unit Weight		0.33 kg (0.73 lb)
Indicator	Green LED	DC OK
Cooling System		Convection
Terminal	Input	3 Pins (Rated 300 V/20 A)
	Output	2 Pins (Rated 300 V/20 A)
Wire		AWG 20-14
Mounting Rail		Standard TS35 DIN Rail in accordance with EN 60715
Noise (1 Meter from power supply)		Sound Pressure Level (SPL) < 40 dBA

Environment

Surrounding Air Temperature	Operating	-20°C to +80°C	
	Storage	-25°C to +85°C	
Power De-rating	Vertical Mounting	-10°C to -20°C output power is 80% of rated power, < 0°C de-rate power by 2% / °C, > 50°C de-rate power by 2.5% / °C	
	Horizontal Mounting	-10°C to -20°C output power is 80% of rated power, < 0°C de-rate power by 2% / °C, > 50°C de-rate power by 2.5% / °C, > 70°C de-rate power by 4% / °C	
Operating Humidity		5 to 95% RH (Non-Condensing)	
Operating Altitude		0 to 2,000 Meters (6,560 ft)	
Shock Test	Non-Operating	IEC 60068-2-27, 30 G (300 m/S²) for a duration of 18 ms, 1 time per direction, 6 times in total	
Vibration	Non-Operating	IEC 60068-2-6, 10 Hz to 150 Hz @ 50 m/S² (5 G peak); 90 min per axis for all X, Y, Z direction	
Over Voltage Category		III	According to IEC/EN 62477-1 / EN 60204-1 (clearance and creepage distances) and IEC 62103 (safety part)
Pollution Degree		2	

Protections

Overvoltage	< 32 V, ±10%, SELV Output, Hiccup Mode, Non-Latching (Auto-Recovery)
Overload / Overcurrent	> 150% of rated load current, Hiccup Mode, Non-Latching (Auto-Recovery)
Over Temperature	< 80°C Surrounding Air Temperature @ 100% load, Non-Latching (Auto-Recovery)
Short Circuit	Hiccup Mode, Non-Latching (Auto-Recovery when the fault is removed)
Internal Fuse at L pin	T3.15AH
Protection Against Shock	Class I with PE* connection

*PE: Primary Earth

CliQ DIN Rail Power Supply
24 V 60 W 1 Phase / DRP024V060W1AZ

Reliability Data

MTBF	> 500,000 hrs. as per Telcordia SR-332 I/P: 115Vac, O/P: 100% load, Ta: 25°C
Expected Cap Life Time	10 years (115 Vac & 230 Vac, 50% load @ 40°C)

Safety Standards / Directives

Electrical Equipment of Machines		EN 60204-1 (over voltage category III)
Electrical Equipment for Use in Electrical Power Installations		IEC/EN/BS EN 62477-1 / IEC 62103
Safety Entry Low Voltage		SELV (IEC 60950-1)
Electrical Safety	SIQ Bauart	EN 62368-1
	UL/cUL recognized	UL 60950-1 and CSA C22.2 No. 60950-1 (File No. E191395), UL 62368-1 and CSA C22.2 No. 62368-1 (File No. E191395)
	cCSAus	CSA C22.2 No. 60950-1 and UL 60950-1 (File No. 181564)
	CB Scheme	IEC 60950-1, IEC 62368-1
	BIS	IS 13252-1
	UKCA	BS EN 62368-1
Industrial Control Equipment	UL/cUL listed	UL 508 and CSA C22.2 No. 107.1-01 (File No. E315355)
	cCSAus	CSA C22.2 No. 107.1-01 (File No. 181564)
CE		In conformance with EMC Directive 2014/30/EU and Low Voltage Directive 2014/35/EU
UKCA		In conformance with Electrical Equipment (Safety) Regulations 2016 No. 1011 and The Electromagnetic Compatibility Regulations 2016 No. 1091
Galvanic Isolation	Input to Output	4.0 KVac
	Input to Ground	1.5 KVac
	Output to Ground	1.5 KVac

CliQ DIN Rail Power Supply
24 V 60 W 1 Phase / DRP024V060W1AZ

EMC

Emissions (CE & RE)		Generic Standards: CISPR 32, KN 32, EN/BS EN 55032, CISPR 11, EN/BS EN 55011, FCC Title 47: Class B
Immunity		Generic Standards: EN/BS EN 55024, KN 35, EN/BS EN 61000-6-1
Electrostatic Discharge	IEC 61000-4-2	Level 4 Criteria A[1)] Air Discharge: 15 kV Contact Discharge: 8 kV
Radiated Field	IEC 61000-4-3	Level 2 Criteria A[1)] 80 MHz-1GHz, 3 V/M, 80% modulation (1kHz)
Electrical Fast Transient / Burst	IEC 61000-4-4	Level 3 Criteria A[1)] 2 kV
Surge	IEC 61000-4-5	Level 3 Criteria A[1)] Common Mode[2)]: 2 kV Differential Mode[3)]: 2 kV
Conducted	IEC 61000-4-6	Level 2 Criteria A[1)] 150 kHz-80 MHz, 3 Vrms
Power Frequency Magnetic Fields	IEC 61000-4-8	Criteria A[1)] 1 A/Meter
Voltage Dips and Interruptions	IEC 61000-4-11	100% dip; 1 cycle (20ms); Self Recoverable
Low Energy Pulse Test (Ring Wave)	IEC 61000-4-12	Level 3 Criteria A[1)] Common Mode[2)]: 2 kV Differential Mode[3)]: 1 kV
Voltage Fluctuation and Flicker		IEC/EN/BS EN 61000-3-3

1) Criteria A: Normal performance within the specification limits
2) Asymmetrical: Common mode (Line to earth)
3) Symmetrical: Differential mode (Line to line)

CliQ DIN Rail Power Supply
24 V 60 W 1 Phase / DRP024V060W1AZ

Block Diagram

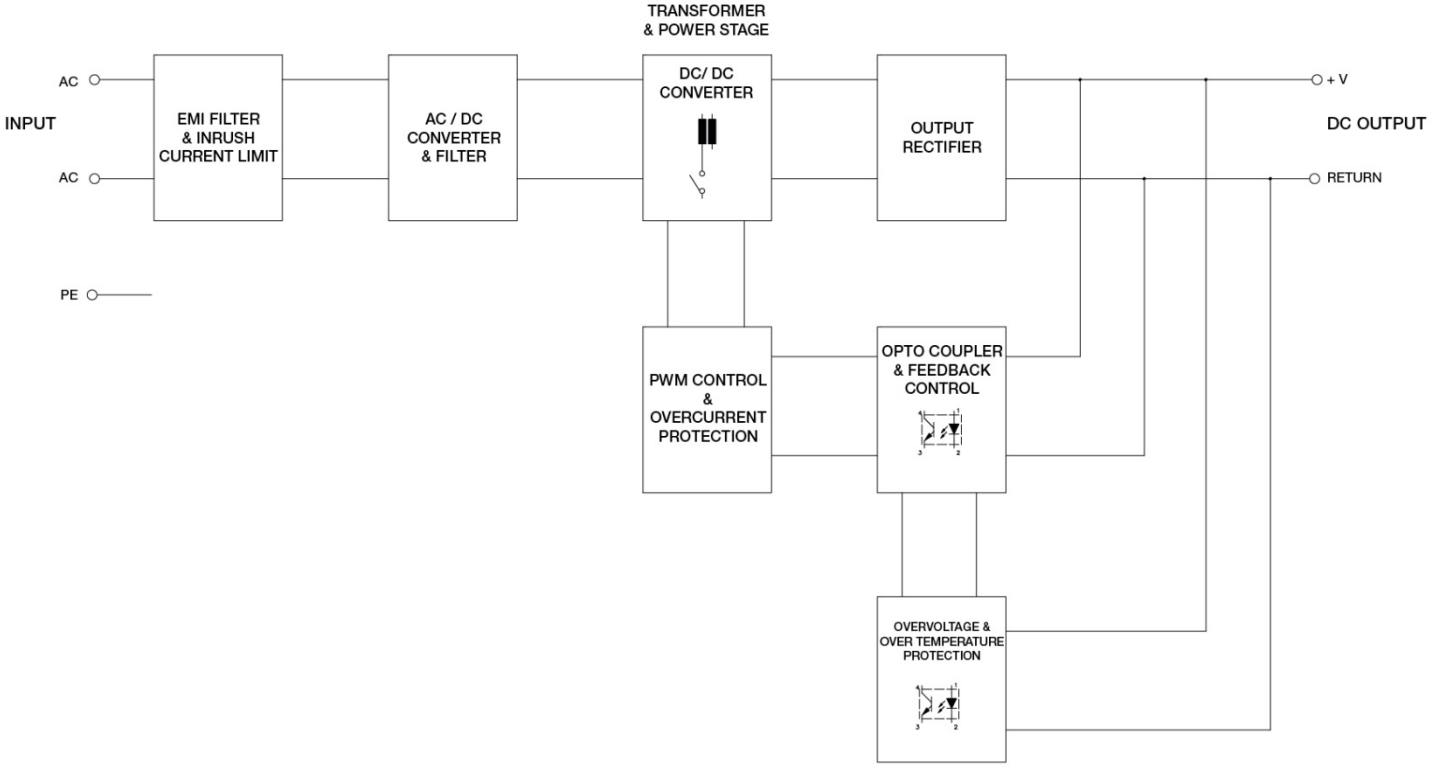

Device Description

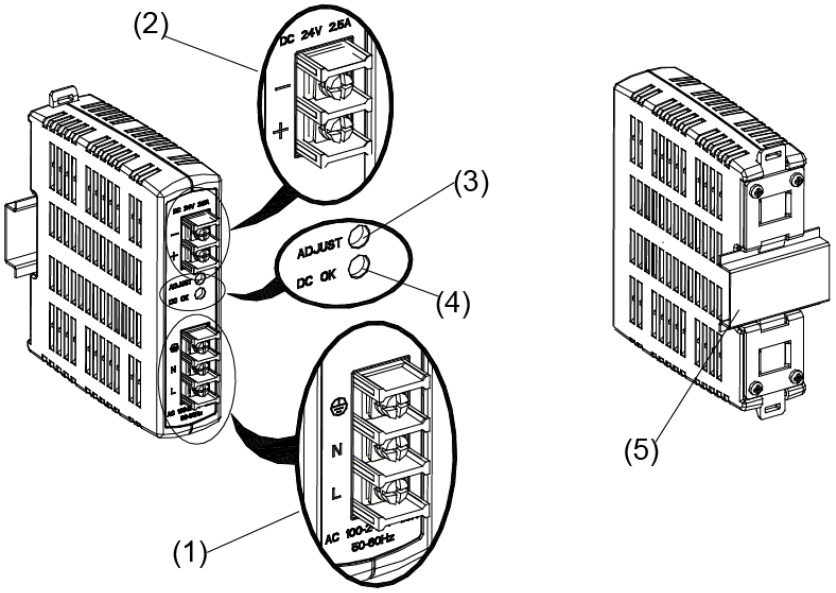

1) Input terminal block connector
2) Output terminal block connector
3) DC Voltage adjustment potentiometer
4) DC OK control LED (Green)
5) Universal mounting rail system

CliQ DIN Rail Power Supply
24 V 60 W 1 Phase / DRP024V060W1AZ

Dimensions

L x W x D: 120.6 x 32 x 113 mm (4.75 x 1.26 x 4.45 inch)

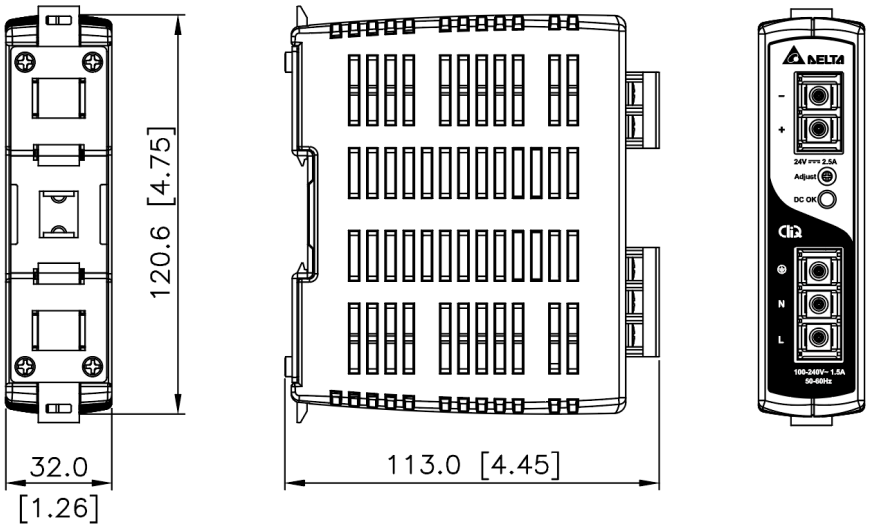

Engineering Data

Output Load De-rating VS Surrounding Air Temperature

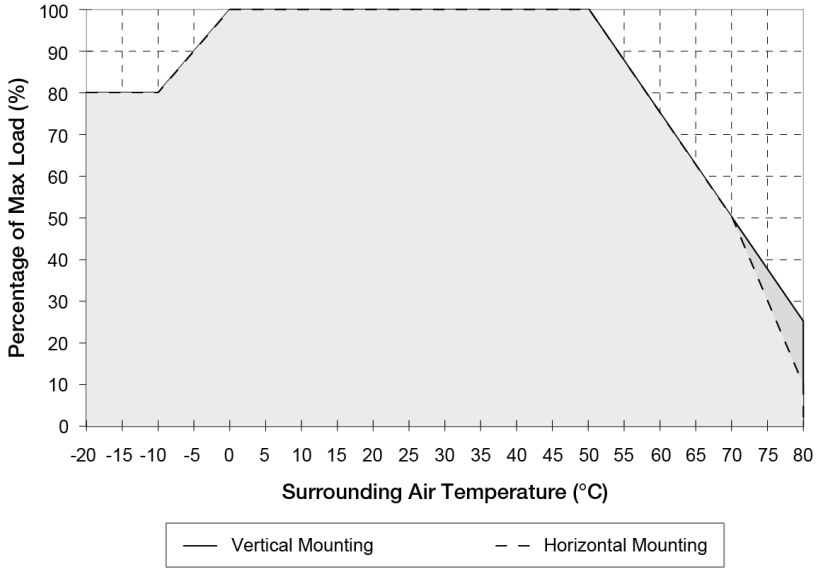

Fig. 1 **De-rating for Vertical Mounting Orientation**
-10°C to -20°C output power is 80% of rated power,
< 0°C de-rate power by 2% / °C,
> 50°C de-rate power by 2.5% / °C

De-rating for Horizontal Mounting Orientation
-10°C to -20°C output power is 80% of rated power,
< 0°C de-rate power by 2% / °C,
> 50°C de-rate power by 2.5% / °C,
> 70°C de-rate power by 4% / °C

Note

1. Power supply components may degrade, or be damaged, when the power supply is continuously used outside the shaded region, refer to the graph shown in Fig. 1.
2. If the output capacity is not reduced when the surrounding air temperature exceeds its specification as defined on Page 3 under “Environment”, the device may run into Over Temperature Protection. When activated, the output voltage will go into bouncing mode and will recover when the surrounding air temperature is lowered or the load is reduced as far as necessary to keep the device in working condition.
3. In order for the device to function in the manner intended, it is also necessary to keep a safety distance as recommended in the safety instructions while the device is in operation.
4. Depending on the surrounding air temperature and output load delivered by the power supply, the device can be very hot!
5. If the device has to be mounted in any other orientation, please contact **info@deltapsu.com** for more details.

CliQ DIN Rail Power Supply
24 V 60 W 1 Phase / DRP024V060W1AZ

Output Load De-rating VS Input Voltage

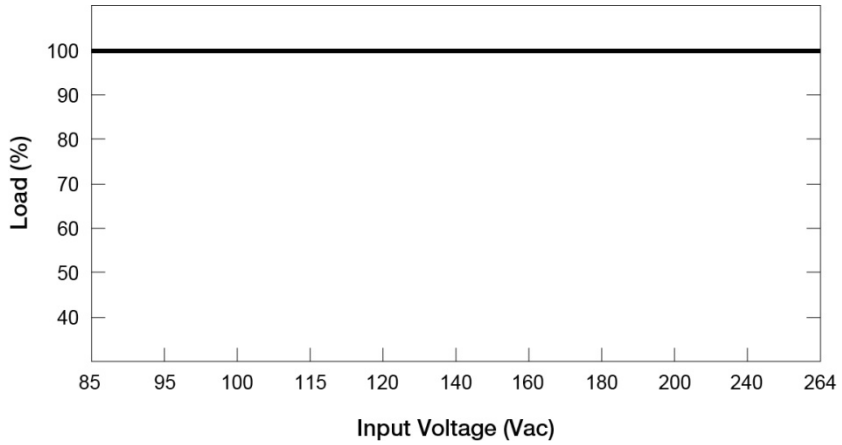

- No output power de-rating across the entire input voltage range

Assembly & Installation

The power supply unit (PSU) can be mounted on 35 mm DIN rails in accordance with EN 60715. The device should be installed with input terminal block at the bottom.

Each device is delivered ready to install.

Mounting

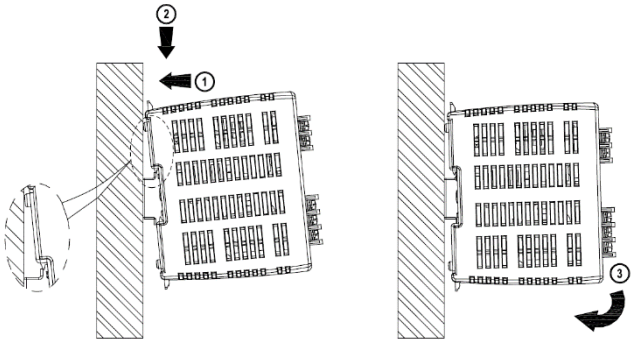

Fig. 2.1 Mounting

Snap on the DIN rail as shown in Fig. 2.1:
1. Tilt the unit upwards and insert it onto the DIN rail.
2. Push downwards until stopped.
3. Press against the bottom front side for locking.
4. Shake the unit slightly to ensure that it is secured.

Dismounting

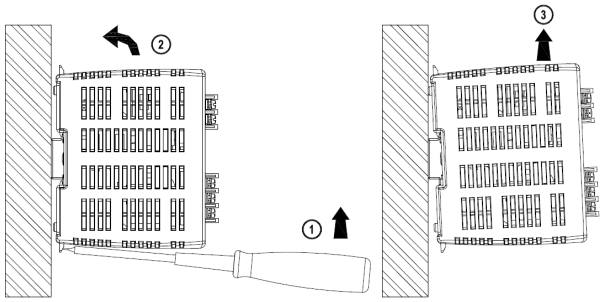

Fig. 2.2 Dismounting

To uninstall, pull or slide down the latch with screw driver as shown in Fig. 2.2. Then slide the power supply unit (PSU) in the opposite direction, release the latch and pull out the power supply unit (PSU) from the rail.

In accordance to EN 60950 / UL 60950 and EN 62368 / UL 62368, flexible cables require ferrules.
Use appropriate copper cables designed to sustain operating temperature of at least 75°C or more to fulfill UL requirements.

CliQ DIN Rail Power Supply
24 V 60 W 1 Phase / DRP024V060W1AZ

Safety Instructions

■ **Vertical Mounting**

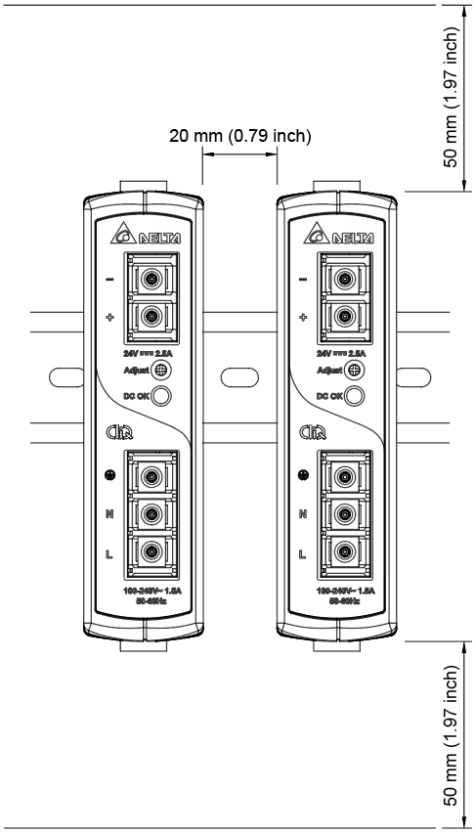

■ **Horizontal Mounting**

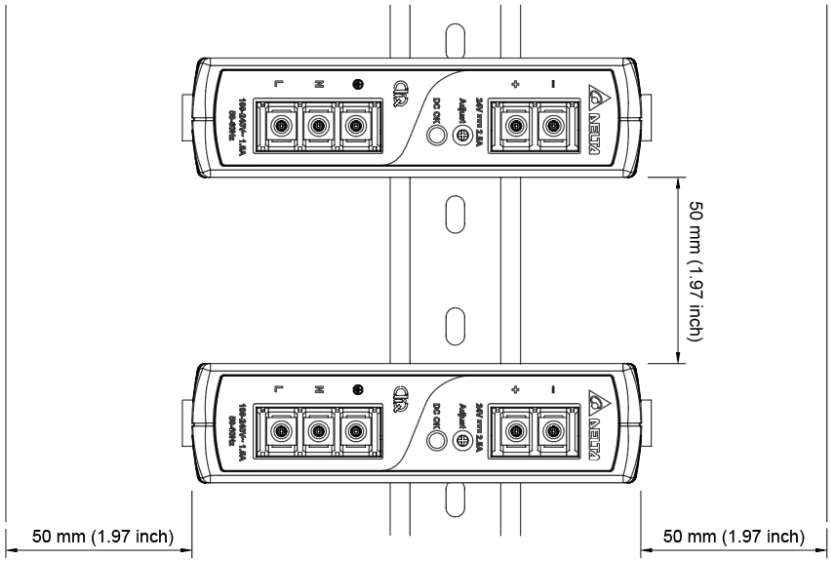

- ALWAYS switch mains of input power OFF before connecting and disconnecting the input voltage to the unit. If mains are not turned OFF, there is risk of explosion / severe damage.
- **To guarantee sufficient convection cooling, please refer to the following instructions to ensure sufficient clearance around the device.**
  <u>Vertical Mounting</u>: 50 mm (1.97 inch) above and below the device as well as a lateral distance of 20 mm (0.79 inch) to other units.
  <u>Horizontal Mounting</u>: 50 mm (1.97 inch) above and below the device as well as a lateral distance of 50 mm (1.97 inch) to other units.
- Note that the enclosure of the device can become very hot depending on the surrounding air temperature and load of the power supply. Risk of burns!
- Only plug in and unplug connectors when power is turned off!
- DO NOT insert any objects into the unit.
- Hazardous voltages may be present for up to 5 minutes after the input mains voltage is disconnected. Do not touch the unit during this time.

CliQ DIN Rail Power Supply
24 V 60 W 1 Phase / DRP024V060W1AZ

Functions

- **Graph illustrating the Start-up Time, Rise Time, and Hold-up Time**

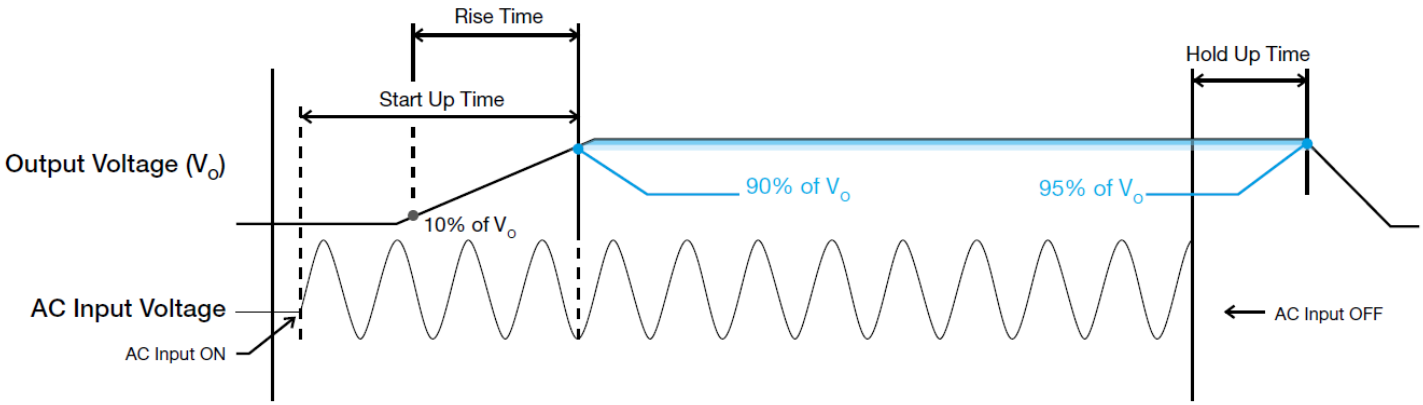

Start-up Time

The time required for the output voltage to reach 90% of its final steady state set value, after the input voltage is applied.

Rise Time

The time required for the output voltage to change from 10% to 90% of its final steady state set value.

Hold-up Time

Time between the collapse of the AC input voltage, and the output falling to 95% of its steady state set value.

Inrush Current

Inrush current is the peak, instantaneous, input current measured and, occurs when the input voltage is first applied. For AC input voltages, the maximum peak value of inrush current will occur during the first half cycle of the applied AC voltage. This peak value decreases exponentially during subsequent cycles of AC voltage.

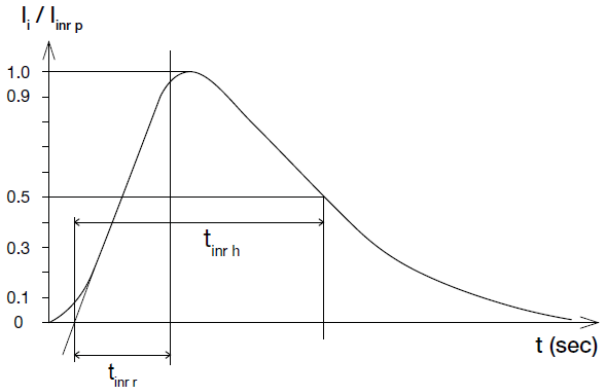

Dynamic Response

The power supply output voltage will remains within ±5% of its steady state value, when subjected to a dynamic load from 10% to 90% of its rated current.

- **50% duty cycle / 5 Hz to 1 KHz**

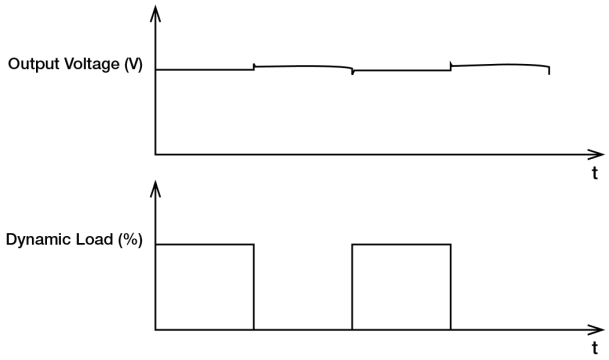

CliQ DIN Rail Power Supply
24 V 60 W 1 Phase / DRP024V060W1AZ

Power Boost

Power Boost is the reserve power available constantly that allows reliable startup to support sudden and short spike of loads with high inrush current typically during turn on to remove the need of more expensive higher rated power supply unit. After the output has reached its steady state set value, the power supply can support surge loads with a higher short-term power demand up to 150% of maximum rated load (I_O Max), for a maximum duration of 3 seconds. The Power Boost is also available to repeatedly basis with according to the condition of an average (R.M.S) output power shall not exceed continuous operating condition or refer to duty cycle calculation below.

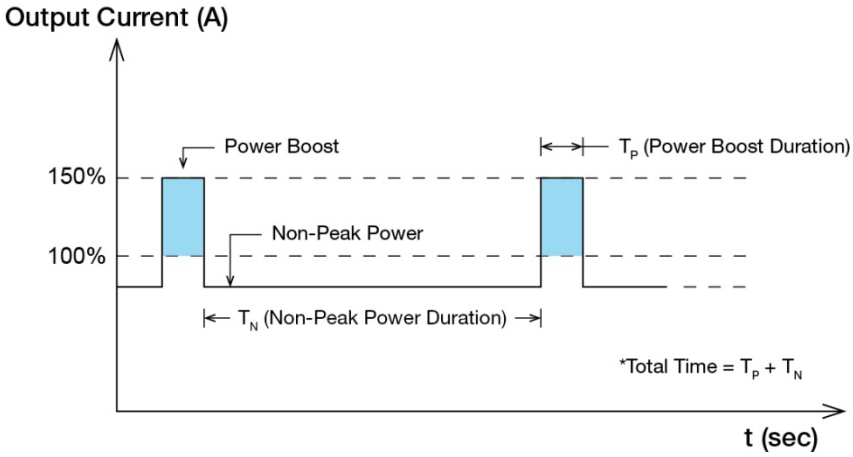

Fig. 3 Duty Cycle Calculation

$$Duty\ cycle\ (\%) = \frac{T_P}{Total\ Time}$$

$$Average\ Output\ Power\ (P_{Avg}) = \frac{(Power\ Boost\ \times T_P) + (Non\text{-}Peak\ Power \times T_N)}{Total\ Time}$$

OR

$$Non\text{-}Peak\ Power = \frac{(P_{Avg} \times Total\ Time) - (Power\ Boost\ \times T_P)}{T_N}$$

■ **An example of Power Boost and Average Output Power**

Power Boost	Peak Power (W_P)	Power Boost Duration (T_P)	Duty Cycle	Non-Peak Power (W_N)	Non-Peak Power Duration (T_N)	Total Time (T)
150%	90	3 sec	10%	57 W	27 sec	30 sec
150%	90	3 sec	35%	44 W	5.5 sec	8.5 sec
120%	72	6 sec	20%	57 W	24 sec	30 sec
120%	72	6 sec	35%	53 W	11 sec	17 sec

It is not recommended to prolong the duration of Power Boost to be longer than the specified duty cycle calculation, this may cause damage to the PSU.

External Input Protection Device

The unit is protected at the L pin, with an internal fuse that cannot be replaced. The power supply has been tested and approved on 20 A (UL) and 16 A (IEC) branch circuits without additional protection device. An external protection device is only required if the supplying branch has an ampacity greater than above. Thus, if an external protective device is necessary, or, utilized, please refer a minimum value of 20 A B- or 13 A C- characteristic breaker.

CliQ DIN Rail Power Supply
24 V 60 W 1 Phase / DRP024V060W1AZ

Overload & Overcurrent Protections (Auto-Recovery)

The power supply's Overload (OLP) and Overcurrent (OCP) Protections will be activated when output current (I_O) exceeds its specification as defined on Page 3 under "Protections". In such occurrence, the output voltage (V_O) will start to droop and once the power supply has reached its maximum power limit, the protection is activated and the power supply will go into "Hiccup mode" (Auto-Recovery). The power supply will recover once the fault condition of the OLP and OCP is removed and I_O is back within the specifications.

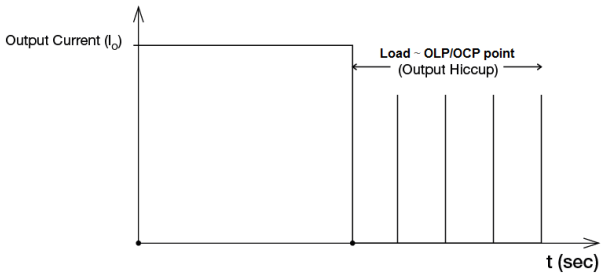

It is not recommended to prolong the duration of I_O when it is less than OLP/OCP point, but greater than 100%, since it may cause damage to the PSU.

Short Circuit Protection (Auto-Recovery)

The power supply's output OLP/OCP function also provides protection against short circuits. When a short circuit is applied, the output current will operate in "Hiccup mode", as shown in the illustration in the OLP/OCP section on this page. The power supply will return to normal operation after the short circuit is removed.

Overvoltage Protection (Auto-Recovery)

The power supply's overvoltage circuit will be activated when its internal feedback circuit fails. The output voltage shall not exceed its specifications defined on Page 3 under "Protections". The power supply does not shut down but goes in 2nd level regulation at 30-32 Vdc and continue to deliver the power. According to high output voltage which will be operating > 100% of rated load (32 V × rated output current), if this condition persists, the power supply will sense OTP (Over Temperature Protection) and will go under hiccup mode. The power will return to normal operation once the fault condition is removed.

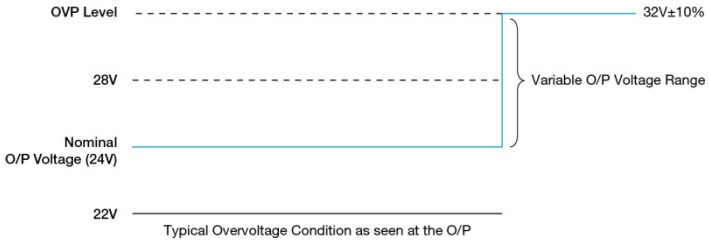

Over Temperature Protection (Auto-Recovery)

As mentioned above, the power supply also has Over Temperature Protection (OTP). In the event of a higher operating temperature at 100% load, the power supply will run into OTP when the operating temperature is beyond what is recommended in the de-rating graph. When activated, the output voltage will go into bouncing mode until the temperature drops to its normal operating temperature as recommended in the de-rating graph.

CliQ DIN Rail Power Supply
24 V 60 W 1 Phase / DRP024V060W1AZ

Operating Mode

■ Redundant Operation

In order to ensure proper redundant operation for the power supply unit (PSU), the output voltage difference between the two units must be kept at 0.45~0.50 V for 24 V supplies. Follow simple steps given below to set them up for the redundant operation:

Step 1.
Measure output voltage of PSU 1 and PSU 2. If PSU 1 is the master unit, then V_O of PSU 1 must be higher than PSU 2. In order to set the output voltage, individually connect the power supply to 50% of rated load at any line voltage from 85-264Vac, and set the PSU 1 and PSU 2 output voltage.

Step 2.
Connect the power supply units PSU 1 and PSU 2 to Vin 1 & Vin 2, respectively, of the DRR-20N (or 20A) module shown on the diagram on the right.

Step 3.
Connect the system load from V_{out}. Please note that output voltage V_{out} from DRR module will be = V_O (output voltage of power supply) – V_{drop}* (in DRR module).

*V_{drop} will vary from 0.60V to 0.90V (Typical 0.65V) depending on the load current and surrounding air temperature.

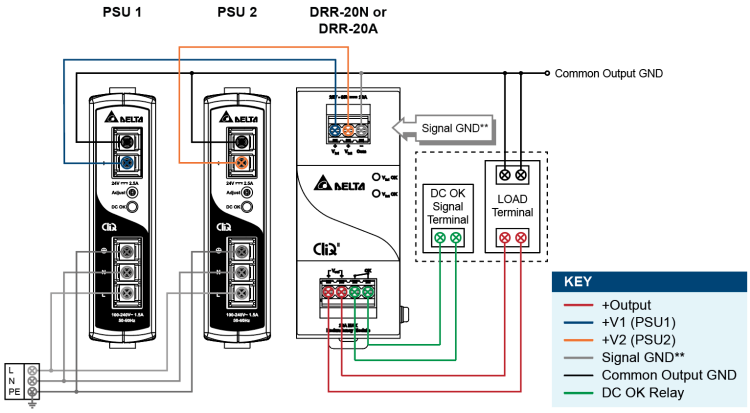

**The Signal GND in the DRR module is for the built-in LED and DC OK signals. The Output GND terminals from the two PSU's do not need to be connected to the Signal GND terminal.

Fig. 4 Redundant Operation Connection Diagram

■ Parallel Operation

The power supply units (PSUs) can also be used for parallel operation in order to increase the output power. The difference in output voltage between the two units must be kept to within 25mV of each other. This difference must be verified with the same output load connected independently to each unit.

Parameters such as EMI, inrush current, leakage current, PARD, start up time will be different from those on the datasheet, when two units are connected in parallel. The user will need to verify that any differences will still allow the two power supplies connected in parallel will work properly in their product/application.

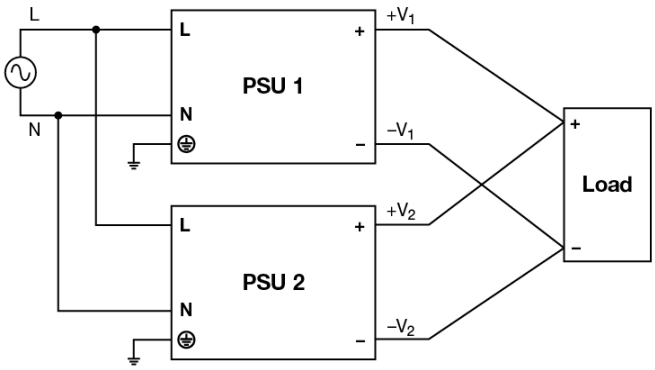

Fig. 5 Parallel Operation Connection Diagram

All parameters are specified at 25°C ambient and AC input unless otherwise indicated.

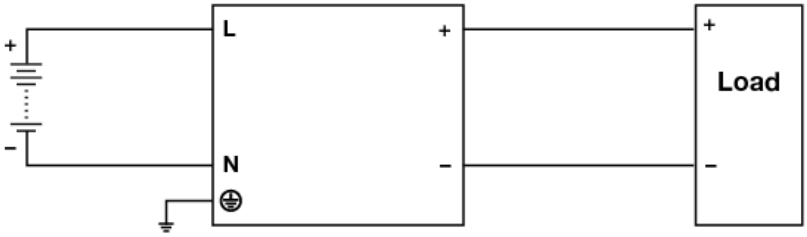

Fig. 6 DC Input Operation Connection Diagram

■ DC Input Operation

Step 1.
Use a battery or similar DC source.

Step 2.
Connect +pole to L and -pole to N.

Step 3.
Connect the PE terminal to an earth wire or to the machine ground.

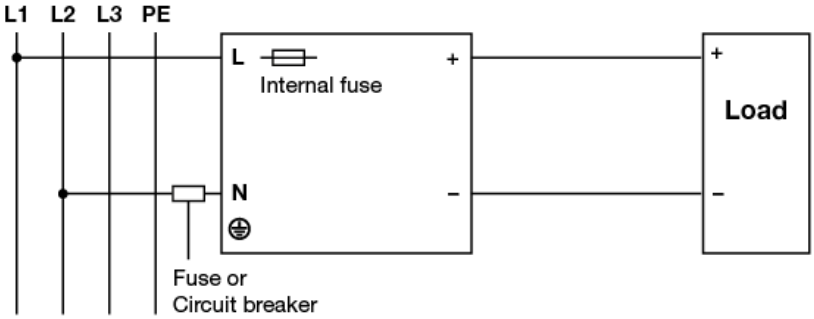

Fig. 7 2 of 3 Phase System Input Operation Connection Diagram

■ 2 of 3 Phase System Input Operation

Delta's CliQ can use on 2 of 3 phase system. Please refer to the following step.

Step 1.
The input voltage applied from Line to Neutral is below the maximum rated input. The input voltage shall be below 240Vac +10%.

Step 2.
The external protector is needed on N (Neutral) input line to secure a safety. N line does not have internal fuse protection. An appropriate fuse or circuit breaker should be connected in series with N input line connection like the following.

Others

Attention

Delta provides all information in the datasheets on an “AS IS” basis and does not offer any kind of warranty through the information for using the product. In the event of any discrepancy between the information in the catalog and datasheets, the datasheets shall prevail (please refer to **www.DeltaPSU.com** for the latest datasheets information). Delta shall have no liability of indemnification for any claim or action arising from any error for the provided information in the datasheets. Customer shall take its responsibility for evaluation of using the product before placing an order with Delta.

Delta reserves the right to make changes to the information described in the datasheets without notice.

Manufacturer and Authorized Representatives Information

Manufacturer

Thailand
Delta Electronics (Thailand) PCL.
909 Pattana 1 Rd., Muang, Samutprakarn, 10280 Thailand

Taiwan
Delta Electronics, Inc.
3 Tungyuan Road, Chungli Industrial Zone, Taoyuan County
32063, Taiwan

Authorized Representatives

The Netherlands
Delta Greentech (Netherlands) B.V.
Zandsteen 15, 2132 MZ Hoofddorp, The Netherlands

United Kingdom
Delta Electronics Europe Limited
1 Redwood Court, Peel Park Campus,
East Kilbride, Glasgow, G74 5PF, United Kingdom