PAH 48, 53 Vout, 450W Series

Isolated, up to 450 Watt, Half-Brick DC-DC Converters

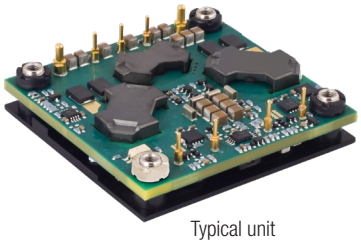

Typical unit

Output (V)	Current (A)	Input Voltage (V)
48	8.5	36-75
53	8.5	36-75

FEATURES

- Wide Vout trim range (see specifications)
- Industry standard “half brick” package
- High efficiency: up to 94%
- Outstanding thermal performance
- Standard baseplate for conduction cooled applications
- No output reverse conduction
- Input to output isolation, 2250Vdc (Basic)
- Input under-voltage lockout
- On/off control (positive or negative logic)
- Output over-voltage protection
- Thermal shutdown
- Output short circuit protection (hiccup technique)
- Certified to UL/60950-1, CSA-C22.2 No. 60950-1, 2nd edition safety approvals

PRODUCT OVERVIEW

For applications requiring improved electrical and thermal performance, consider Murata’s new PAH series “half brick” DC-DC power converters. These compact modules measure 2.3" X 2.4" X 0.5" (58 X 61 X 12.7mm) and offer the industry-standard half brick footprint.

The PAH Series is ideal for power amplifier applications, semiconductor test equipment, wireless networks, and telecom applications. The baseplate provides a means for conduction cooling in demanding thermal environment conditions.

The module provides a 53Vdc or 48Vdc output at 8.5 Amps and accepts a wide input voltage range of 36-75Vdc. The PAH topology offers high efficiency (up to 94%), tight line and load regulation, low ripple/noise, and a fast dynamic load response. A single-board, highly optimized thermal design contributes to the superior thermal performance.

These half-bricks provide output trim, sense pins, and primary side on/off control. Standard features also include input under-voltage shutdown, output over-voltage protection, output short-circuit/current limiting protection, and thermal shutdown.

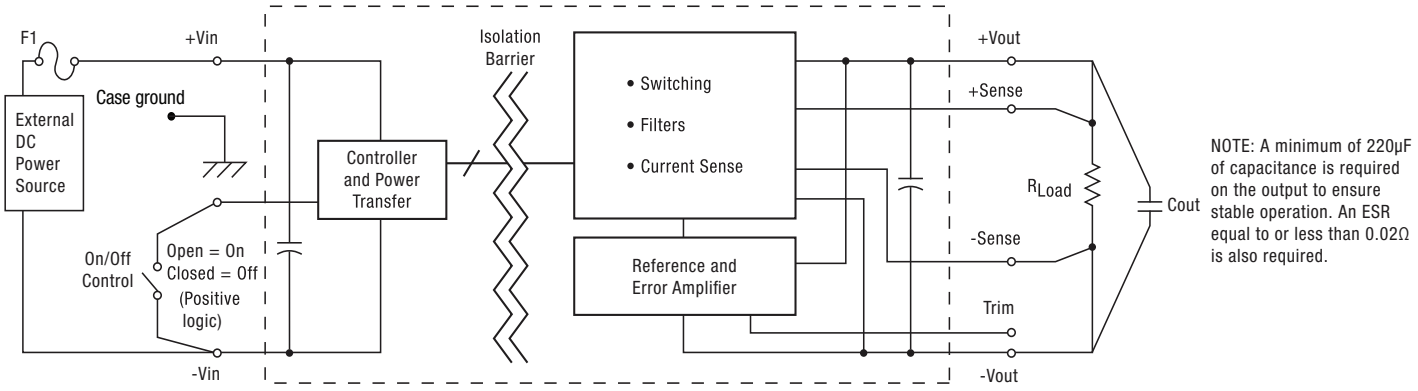

Figure 1. Simplified Schematic

Typical topology is shown. Some models may vary slightly.

RoHS COMPLIANT

For full details go to www.murata-ps.com/rohs

PERFORMANCE SPECIFICATIONS SUMMARY AND ORDERING GUIDE

Root Model ①	Output							Input				Efficiency		Dimensions (Inches)
	V_{OUT} (Volts)	I_{OUT} (Amps, Max.)	Power (Watts)	R/N (mV pk-pk) Typ.	R/N (mV pk-pk) Max.	Regulation (Max.) Line	Regulation (Max.) Load	V_{IN} Nom. (Volts)	Range (Volts)	I_{IN}, no load (mA)	I_{IN}, full load (Amps)	Min.④	Typ.	
PAH-48/8.5-D48	48	8.5	408	75	200	±0.6%	±0.6%	48	36-75	80	9.98	90%	94%	2.3x2.4x0.5
PAH-53/8.5-D48 * To Be Discontinued	53	8.5	450.5	75	200	±0.6%	±0.6%	48	36-75	80	9.98	90%	94%	2.3x2.4x0.5

① Please refer to the full model number structure for additional ordering part numbers and options.
② All specifications are typical at nominal line voltage and full load, +25ºC. unless otherwise noted. See detailed specifications.
③ Full power continuous output requires baseplate installation. Please refer to the derating curves.
④ Minimum efficiency applies to all input voltages and working temperatures.

PART NUMBER STRUCTURE

PAH - 53 / 8.5 - D48 N Bx H Lx - C

Power Amplifier Half-Brick

Nominal Output Voltage

Maximum Output Current in Amps

Input Voltage Range:
D48 = 36-75 Volts (48V nominal)

On/Off Control Logic
N = Negative logic
P = Positive logic

Baseplate (installed on all models)
B = Baseplate installed with standard M3-12.7 threaded rivet (typ. 4)
B1 = Baseplate installed with unthreaded insert (see Mechanical section for details).

Conformal coating (optional)
Blank = no coating, standard
H = Coating added ①

Pin length option
Blank = standard pin length 0.180 in. (4.57 mm)
L1 = 0.110 in. (2.79 mm) ①
L2 = 0.145 in. (3.68 mm) ①

RoHS Hazardous Materials compliance
C = RoHS-6 (no lead), standard, does not claim EU exemption 7b – lead in solder

①Special quantity order is required; samples available with standard pin length only.
②Some model number combinations may not be available. See website or contact your local Murata sales representative.

* To Be Discontinued

* NOTE: **PAH-53/8.5-D48NBL1-C** is TO BE DISCONTINUED:

*** Last time buy date is 3/31/2022.**

FUNCTIONAL SPECIFICATIONS, PAH-48/8.5-D48

ABSOLUTE MAXIMUM RATINGS	Conditions ①	Minimum	Typical/Nominal	Maximum	Units
Input Voltage, Continuous	Full power operation	0		80	Vdc
Input Voltage, Transient	Operating or non-operating, tested: 100 mS max. duration	0		100	Vdc
Isolation Voltage	Input to output			2250	Vdc
Input Reverse Polarity	None, install external fuse		None		Vdc
On/Off Remote Control	Power on or off, referred to -Vin	0		15	Vdc
Output Power		0	408	414.12	W
Output Current	Current-limited, no damage, short-circuit protected	0		8.5	A
Storage Temperature Range	Vin = Zero (no power)	-55		125	˚C
Absolute maximums are stress ratings. Exposure of devices to greater than any of these conditions may adversely affect long-term reliability. Proper operation under conditions other than those listed in the Performance/Functional Specifications Table is not implied nor recommended.					
INPUT					
Operating voltage range		36	48	75	Vdc
Recommended External Fuse	Fast blow			20	A
Turn On/Start-up threshold tested at 1/2 load	Rising input voltage	33	34	35	Vdc
Turn Off/Undervoltage lockout tested at 1/2 load	Falling input voltage	31	32	33	Vdc
Reverse Polarity Protection	None, install external fuse		None		Vdc
Internal Filter Type			Pi		
Input current					
Full Load Conditions	Vin = nominal		9.98	10.58	A
Low Line	Vin = minimum		13.31	13.96	A
Inrush Transient			0.2	0.5	A^2-Sec.
Short Circuit Input Current			60	200	mA
No Load Input Current	Iout = minimum, unit=ON		80	150	mA
Shut-Down Mode Input Current			5	10	mA
Reflected (back) ripple current ②	Measured at input with specified filter		40	80	mA, pk-pk
GENERAL and SAFETY					
Efficiency	Vin=48V, full load, +25˚C.	90	94		%
	@ Vin=Min	91	94		%
Isolation					
Isolation Voltage	Input to output, continuous	2250			Vdc
	Input to Baseplate, continuous	1500			
	Output to Baseplate, continuous	1500			
Insulation Safety Rating			basic		
Isolation Resistance			10		Mohm
Isolation Capacitance			3300		pF
Safety	Certified to UL-60950-1, CSA-C22.2 No.60950-1, IEC/60950-1, 2nd edition		Yes		
Calculated MTBF	Per Telcordia SR332, issue 1 class 3, ground fixed, Tambient=+25˚C		1.6		Hours x 10^6
DYNAMIC CHARACTERISTICS					
Fixed Switching Frequency			160		KHz
Startup Time	Power On to Vout regulated (100% resistive load)		50	100	mS
Startup Time	Remote ON to 10% Vout (50% resistive load)		50	100	mS
Dynamic Load Response	50-75-50% load step, settling time to within ±1% of Vout di/dt = 1 A/µSec			100	µSec
Dynamic Load Peak Deviation	same as above		±400	±600	mV
FEATURES and OPTIONS					
Remote On/Off Control ③					
"N" suffix:					
Negative Logic, ON state		–0.1		0.8	V
Negative Logic, OFF state	Pin open=OFF	2.5		15	V
Control Current	open collector/drain		1	2	mA
"P" suffix:					
Positive Logic, ON state	Pin open=ON	3.5		15	V
Positive Logic, OFF state		0		1	V
Control Current	open collector/drain		1	2	mA
Remote Sense Compliance	Vsense=Vout–Vload, Sense connected at load			5	% of Vout

FUNCTIONAL SPECIFICATIONS, PAH-48/8.5-D48 (CONT.)

OUTPUT					
Total Output Power	See Derating		408	414.12	W
Voltage					
Nominal Output Voltage	No trim	47.28	48	48.72	Vdc
Setting Accuracy	At 50% load		1.5		% of Vnom.
Output Voltage Range	User-adjustable	28.8(40%)		55.2(15%)	Vdc
Overvoltage Protection	Via magnetic feedback	52.8	57.6	70	Vdc
Current					
Output Current Range		0	8.5	8.5	A
Minimum Load			No minimum load		
Current Limit Inception ④	98% of Vnom., after warmup	9	12	15	A
Short Circuit					
Short Circuit Current	Hiccup technique, autorecovery within ±1% of Vout		0.5	5.0	A
Short Circuit Duration (remove short for recovery)	Output shorted to ground, no damage		Continuous		
Short circuit protection method	Current limiting				
Regulation ⑤					
Line Regulation	Vin=min. to max. Vout=nom.			±0.6	%
Load Regulation	Iout=min. to max. Vin=48V.			±0.6	%
Ripple and Noise	5 Hz- 20 MHz BW		75	200	mV pk-pk
Temperature Coefficient	At all outputs		.02		% of Vnom./°C
External output capacitance required ⑥	Cap. ESR=<0.02Ω, Full resistive load	220		1000	µF
MECHANICAL (Through Hole Models)					
Outline Dimensions	with baseplate; see mechanical drawing		2.3 X 2.4 X 0.5		Inches
			58.4x60.96x12.7		mm
Weight			3.33		Ounces
			94.4		Grams
Through Hole Pin Diameter	Pins 1–4, 6–8/5,9		0.040/0.06		Inches
			1.016/1.524		mm
Through Hole Pin Material			Copper alloy		
TH Pin Plating Metal and Thickness	Nickel subplate		100-299		µ-inches
	Gold overplate		10.31		µ-inches
Case or Baseplate Material			Aluminum		
ENVIRONMENTAL					
Operating Ambient Temperature Range	See derating curves	-40		85	°C
Operating Case Temperature		-40		115	°C
Storage Temperature	Vin = Zero (no power)	-55		125	°C
Thermal Protection/Shutdown	Measured in center	115	125	130	°C
Electromagnetic Interference Conducted, EN55022/CISPR22	External filter required		B		Class
Relative humidity, non-condensing	To +85°C	10		90	%RH
Altitude		-500		10,000	feet
(must derate -1%/1000 feet)		-152		3048	meters
RoHS rating			RoHS-6		

Notes

① Unless otherwise noted, all specifications are at nominal input voltage, nominal output voltage and full load. General conditions are +25° Celsius ambient temperature, near sea level altitude, natural convection airflow. All models are tested and specified with external parallel 1 µF and 470 µF output capacitors. A 220µF external input capacitors is required. All capacitors are low-ESR types wired close to the converter.

② Input (back) ripple current is tested and specified over 5 Hz to 20 MHz bandwidth. Input filtering is Cbus=220 µF/100V, Cin=470 µF/100V and Lbus=12 µH.

③ The Remote On/Off Control is referred to -Vin.

④ Over-current protection is non-latching with auto reovery (Hiccup)

⑤ Regulation specifications describe the output voltage changes as the line voltage or load current is varied from its nominal or midpoint value to either extreme.

⑥ Required minimum output capacitance is 220 µF, low ESR.

TYPICAL PERFORMANCE DATA, PAH-48/8.5-D48

Efficiency and Power Dissipation @ Ta = +25°C

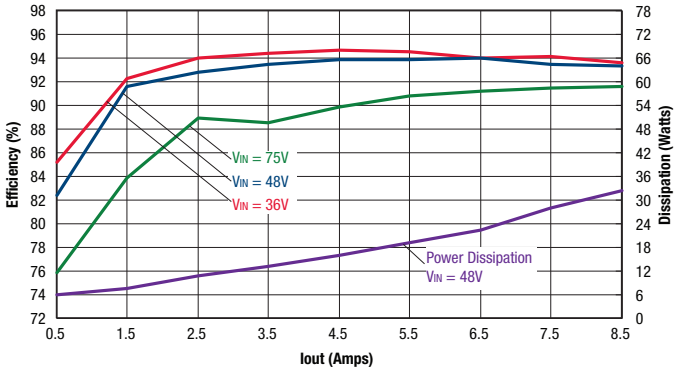

Output Power Derating in Conduction Cooling (Cold Baseplate) Applications
(Vin=48V, Ambient Temperature <70°C)

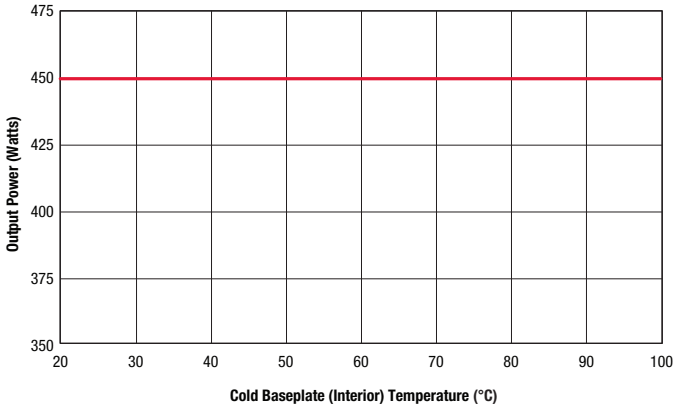

Maximum Current Temperature Derating at sea level
(Vin=48V, transverse airflow, on 10˝ x 10˝ PCB with baseplate)

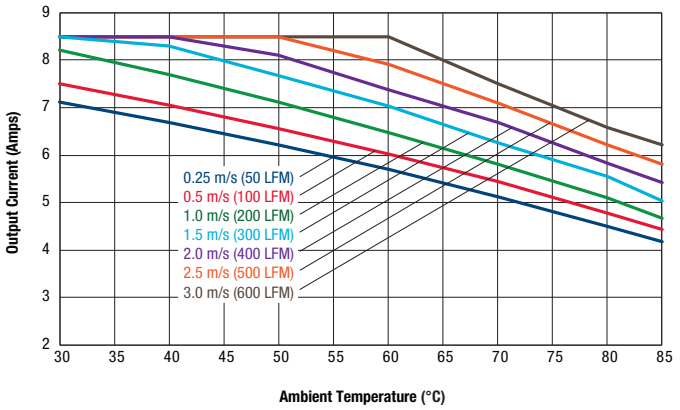

Maximum Current Temperature Derating at sea level
(Vin=48V, longitudinal airflow, on 10˝ x 10˝ PCB with baseplate)

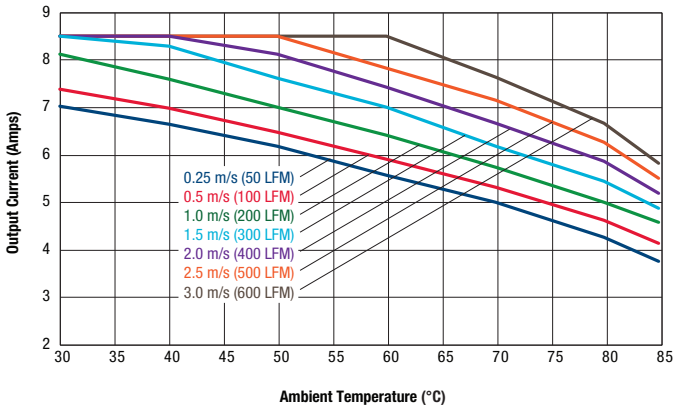

Maximum Power Temperature Derating at sea level
(Vin=48V, transverse airflow, on 10˝ x 10˝ PCB with baseplate)

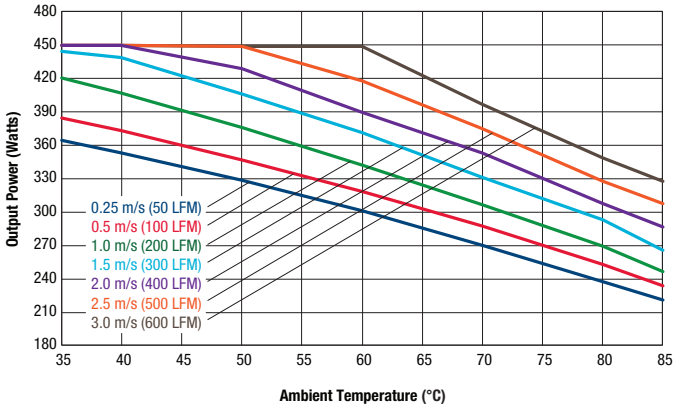

Maximum Power Temperature Derating at sea level
(Vin=48V, longitudinal airflow, on 10˝ x 10˝ PCB with baseplate)

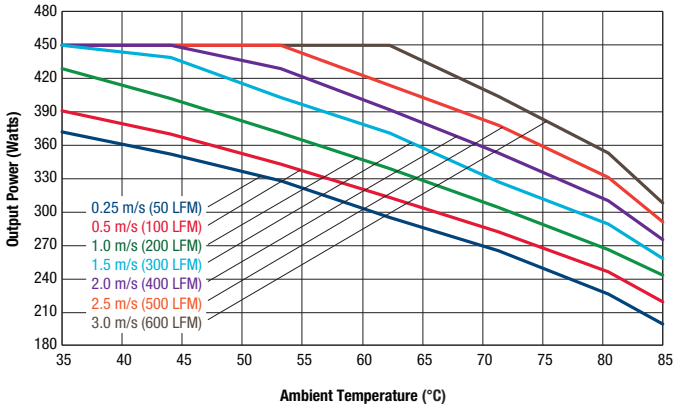

FUNCTIONAL SPECIFICATIONS, PAH-53/8.5-D48

ABSOLUTE MAXIMUM RATINGS	Conditions ①	Minimum	Typical/Nominal	Maximum	Units
Input Voltage, Continuous	Full power operation	0		80	Vdc
Input Voltage, Transient	Operating or non-operating, tested: 100 mS max. duration	0		100	Vdc
Isolation Voltage	Input to output			2250	Vdc
Input Reverse Polarity	None, install external fuse		None		Vdc
On/Off Remote Control	Power on or off, referred to -Vin	0		15	Vdc
Output Power		0	450.5	457.26	W
Output Current	Current-limited, no damage, short-circuit protected	0		8.5	A
Storage Temperature Range	Vin = Zero (no power)	-55		125	˚C
Absolute maximums are stress ratings. Exposure of devices to greater than any of these conditions may adversely affect long-term reliability. Proper operation under conditions other than those listed in the Performance/Functional Specifications Table is not implied nor recommended.					
INPUT					
Operating voltage range		36	48	75	Vdc
Recommended External Fuse	Fast blow			20	A
Turn On/Start-up threshold tested at 1/2 load	Rising input voltage	33	34	35	Vdc
Turn Off/Undervoltage lockout tested at 1/2 load	Falling input voltage	31	32	33	Vdc
Reverse Polarity Protection	None, install external fuse		None		Vdc
Internal Filter Type			Pi		
Input current					
Full Load Conditions	Vin = nominal		9.98	10.58	A
Low Line	Vin = minimum		13.31	13.96	A
Inrush Transient			0.2	0.5	A^2-Sec.
Short Circuit Input Current			60	200	mA
No Load Input Current	Iout = minimum, unit=ON		80	150	mA
Shut-Down Mode Input Current			5	10	mA
Reflected (back) ripple current ②	Measured at input with specified filter		40	80	mA, pk-pk
GENERAL and SAFETY					
Efficiency	Vin=48V, full load, +25˚C.	90	94		%
	@ Vin=Min	91	94		%
Isolation					
Isolation Voltage	Input to output, continuous		2250		Vdc
	Input to Baseplate, continuous		1500		
	Output to Baseplate, continuous		1500		
Insulation Safety Rating			basic		
Isolation Resistance			10		Mohm
Isolation Capacitance			1,500		pF
Safety	Certified to UL-60950-1, CSA-C22.2 No.60950-1, IEC/60950-1, 2nd edition		Yes		
Calculated MTBF	Per Telcordia SR332, issue 1 class 3, ground fixed, Tambient=+25˚C		1.6		Hours x 10^6
DYNAMIC CHARACTERISTICS					
Fixed Switching Frequency			160		KHz
Startup Time	Power On to Vout regulated (100% resistive load)		50	100	mS
Startup Time	Remote ON to 10% Vout (50% resistive load)		50	100	mS
Dynamic Load Response	50-75-50% load step, settling time to within ±1% of Vout di/dt = 1 A/µSec			100	µSec
Dynamic Load Peak Deviation	same as above		±400	±600	mV
FEATURES and OPTIONS					
Remote On/Off Control ③					
"N" suffix:					
Negative Logic, ON state		–0.1		0.8	V
Negative Logic, OFF state	Pin open=OFF	2.5		15	V
Control Current	open collector/drain		1	2	mA
"P" suffix:					
Positive Logic, ON state	Pin open=ON	3.5		15	V
Positive Logic, OFF state		0		1	V
Control Current	open collector/drain		1	2	mA
Remote Sense Compliance	Vsense=Vout–Vload, Sense connected at load			5	% of Vout
Base Plate	"B" suffix				

FUNCTIONAL SPECIFICATIONS, PAH-53/8.5-D48 (CONT.)

OUTPUT					
Total Output Power	See Derating		450.5	457.26	W
Voltage					
Nominal Output Voltage	No trim	52.205	53	53.795	Vdc
Setting Accuracy	At 50% load		1.5		% of Vnom.
Output Voltage Range	User-adjustable	26.5(-50%)		55.65(+5%)	Vdc
Overvoltage Protection	Via magnetic feedback	58.3	63.6	70	Vdc
Current					
Output Current Range		0	8.5	8.5	A
Minimum Load			No minimum load		
Current Limit Inception ④	98% of Vnom., after warmup	9	12	15	A
Short Circuit					
Short Circuit Current	Hiccup technique, autorecovery within ±1% of Vout		0.5	5.0	A
Short Circuit Duration (remove short for recovery)	Output shorted to ground, no damage		Continuous		
Short circuit protection method	Current limiting				
Regulation ⑤					
Line Regulation	Vin=min. to max. Vout=nom.			±0.6	%
Load Regulation	Iout=min. to max. Vin=48V.			±0.6	%
Ripple and Noise	5 Hz- 20 MHz BW		75	200	mV pk-pk
Temperature Coefficient	At all outputs		.02		% of Vnom./°C
External output capacitance required ⑥	Cap. ESR=<0.02Ω, Full resistive load	220		1000	µF
MECHANICAL (Through Hole Models)					
Outline Dimensions	with baseplate; see mechanical drawing		2.3 X 2.4 X 0.5		Inches
			58.4x60.96x12.7		mm
Weight			3.33		Ounces
			94.4		Grams
Through Hole Pin Diameter	Pins 1–4, 6–8/5,9		0.040/0.06		Inches
			1.016/1.524		mm
Through Hole Pin Material			Copper alloy		
TH Pin Plating Metal and Thickness	Nickel subplate		100-299		µ-inches
	Gold overplate		10.31		µ-inches
Case or Baseplate Material			Aluminum		
ENVIRONMENTAL					
Operating Ambient Temperature Range	See derating curves	-40		85	°C
Operating Case Temperature		-40		115	°C
Storage Temperature	Vin = Zero (no power)	-55		125	°C
Thermal Protection/Shutdown	Measured in center	115	125	130	°C
Electromagnetic Interference Conducted, EN55022/CISPR22	External filter required		B		Class
Relative humidity, non-condensing	To +85°C	10		90	%RH
Altitude		-500		10,000	feet
(must derate -1%/1000 feet)		-152		3048	meters
RoHS rating			RoHS-6		

Notes

① Unless otherwise noted, all specifications are at nominal input voltage, nominal output voltage and full load. General conditions are +25° Celsius ambient temperature, near sea level altitude, natural convection airflow. All models are tested and specified with external parallel 1 µF and 470 µF output capacitors. A 220µF external input capacitors is required. All capacitors are low-ESR types wired close to the converter.

② Input (back) ripple current is tested and specified over 5 Hz to 20 MHz bandwidth. Input filtering is Cbus=220 µF/100V, Cin=470 µF/100V and Lbus=12 µH.

③ The Remote On/Off Control is referred to -Vin.

④ Over-current protection is non-latching with auto reovery (Hiccup)

⑤ Regulation specifications describe the output voltage changes as the line voltage or load current is varied from its nominal or midpoint value to either extreme.

⑥ Required minimum output capacitance is 220 µF, low ESR.

TYPICAL PERFORMANCE DATA, PAH-53/8.5-D48

Efficiency and Power Dissipation @ Ta = +25°C

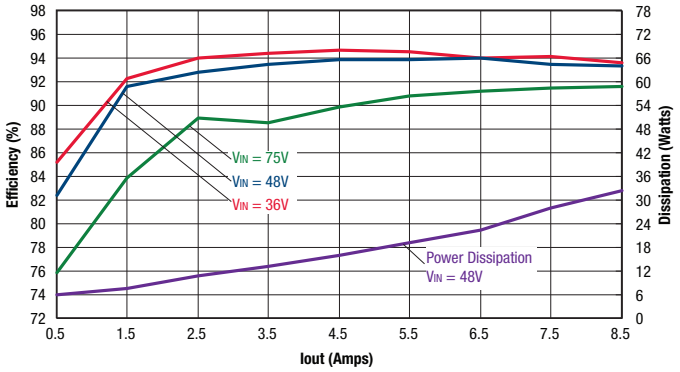

Output Power Derating in Conduction Cooling (Cold Baseplate) Applications
(Vin=48V, Ambient Temperature <70°C)

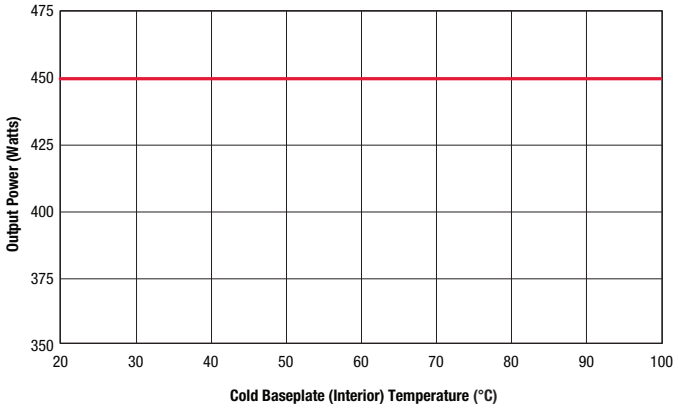

Maximum Current Temperature Derating at sea level
(Vin=48V, transverse airflow, on 10˝ x 10˝ PCB with baseplate)

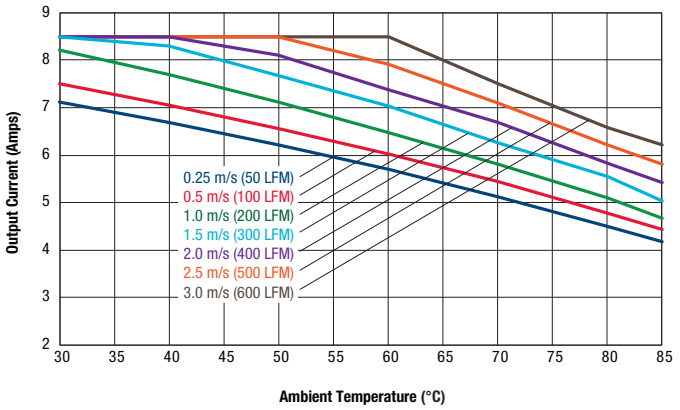

Maximum Current Temperature Derating at sea level
(Vin=48V, longitudinal airflow, on 10˝ x 10˝ PCB with baseplate)

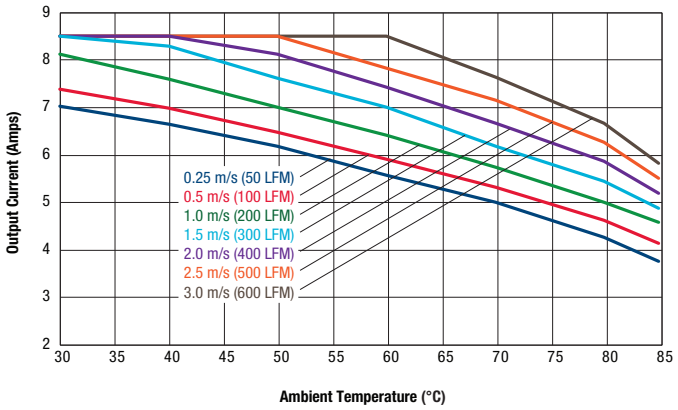

Maximum Power Temperature Derating at sea level
(Vin=48V, transverse airflow, on 10˝ x 10˝ PCB with baseplate)

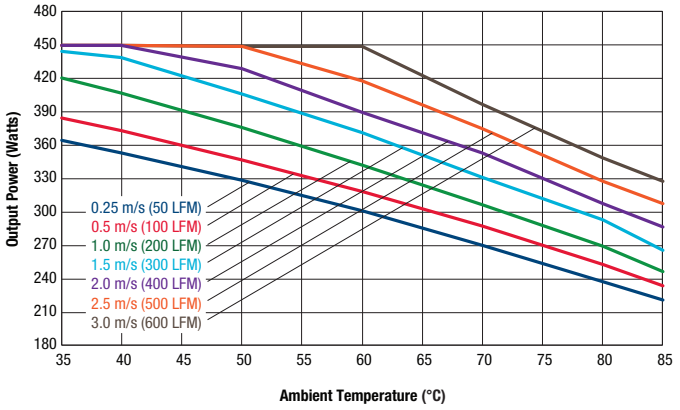

Maximum Power Temperature Derating at sea level
(Vin=48V, longitudinal airflow, on 10˝ x 10˝ PCB with baseplate)

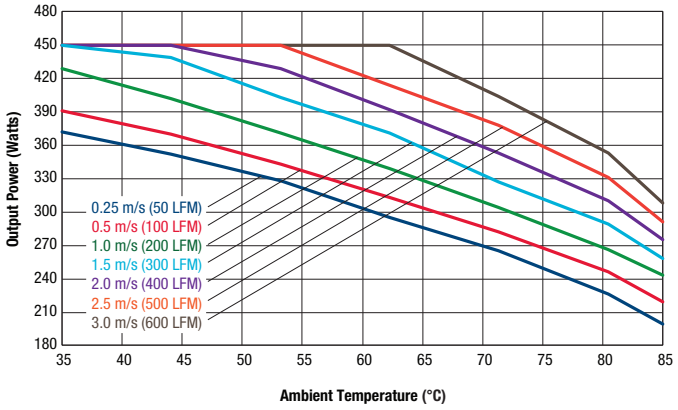

OSCILLOGRAMS, PAH-53/8.5-D48

Output ripple and Noise (Vin=48V, Iout=0A, Cload=220uf, Ta=+25°C)
Vo ripple=13.8mV

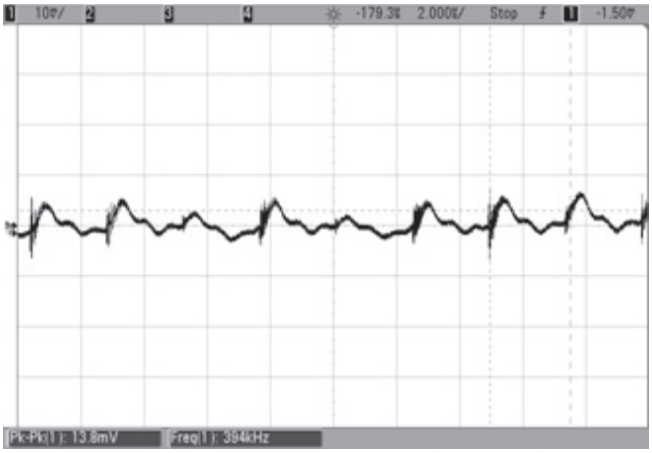

Output ripple and Noise (Vin=48V, Iout=8.5A, Cload=220uf, Ta=+25°C)
Vo ripple=64mV

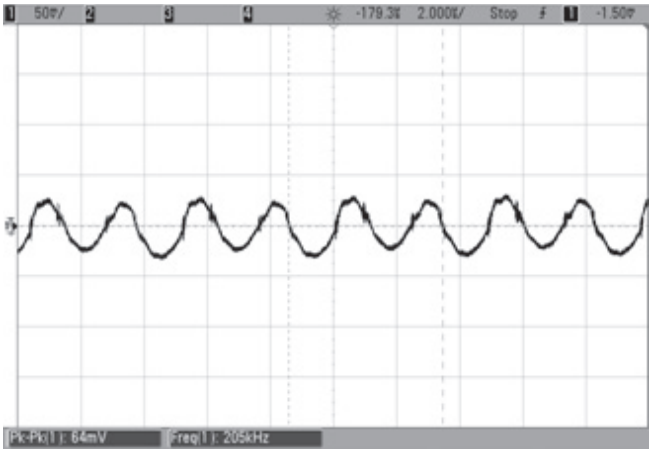

On/Off Enable Start-up (Vin=48V, Vout=nom, Iout=0A, Cload=220uF, Ta=+25°C)

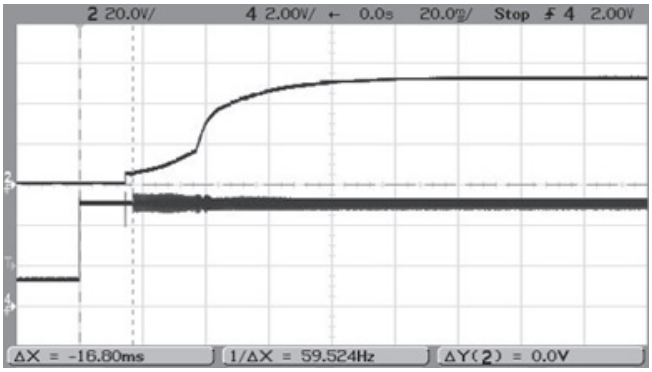

On/Off Enable Start-up (Vin=48V, Vout=nom, Iout=8.5A, Cload=220uF, Ta=+25°C)

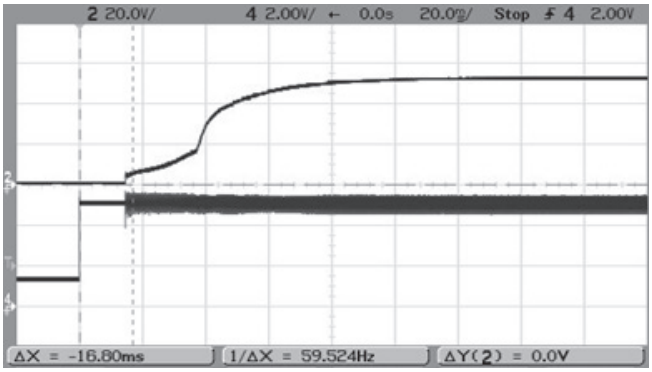

On/Off Enable Start-up (Vin=48V, Vout=nom, Iout=8.5A, Cload=1000uF, Ta=+25°C)

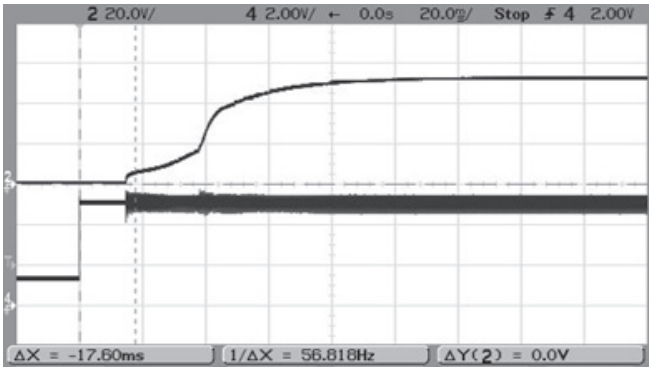

Start-up Delay (Vin=48V, Vout=nom, Iout=0A, Cload=220uF, Ta=+25°C)
Trace 1=Vin, Trace2= Vout

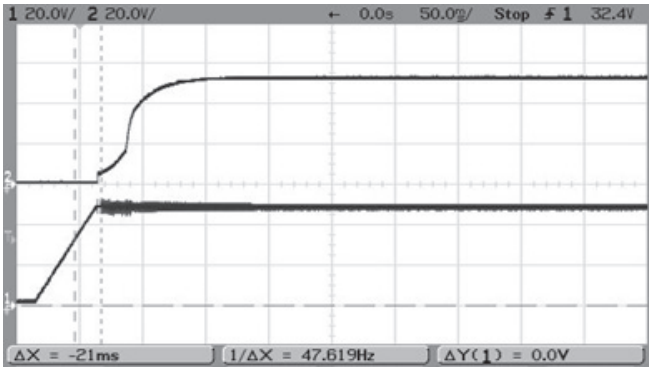

OSCILLOGRAMS, PAH-53/8.5-D48

Start-up Delay (Vin=48V, Vout=nom, Iout=8.5A, Cload=220uF, Ta=+25°C)
Trace 1=Vin, Trace2= Vout

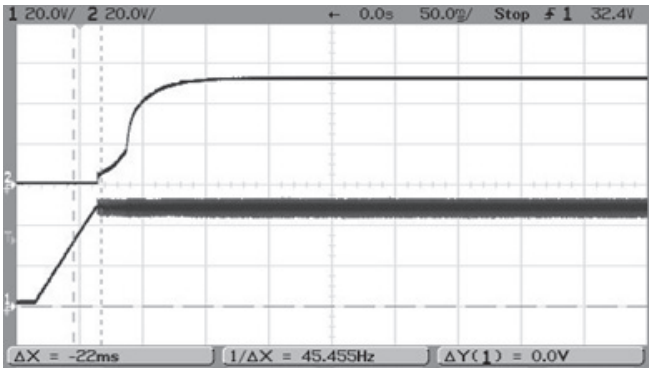

Start-up Delay (Vin=48V, Vout=nom, Iout=8.5A, Cload=1000uF, Ta=+25°C)
Trace 1=Vin, Trace2= Vout

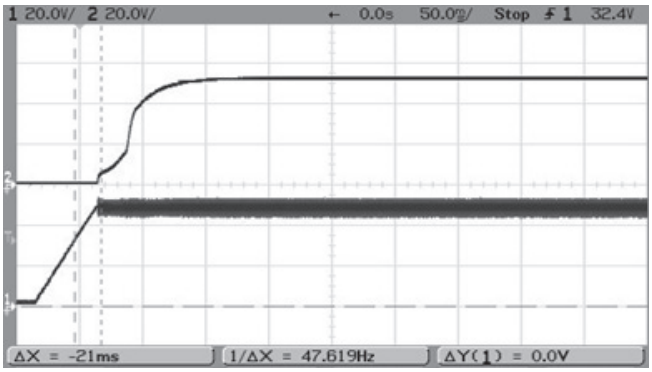

Step Load Transient Response (Vin=48V, Vout=nom, Cload=220uF, Iout=50-75-50%
of full load (1As/us), Ta=+25°C)

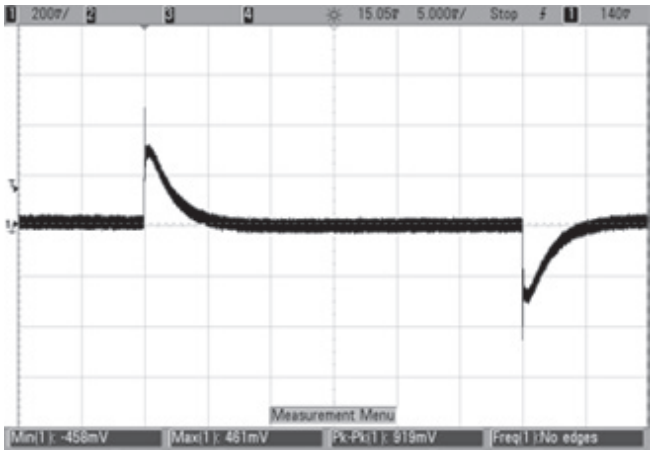

MECHANICAL SPECIFICATIONS

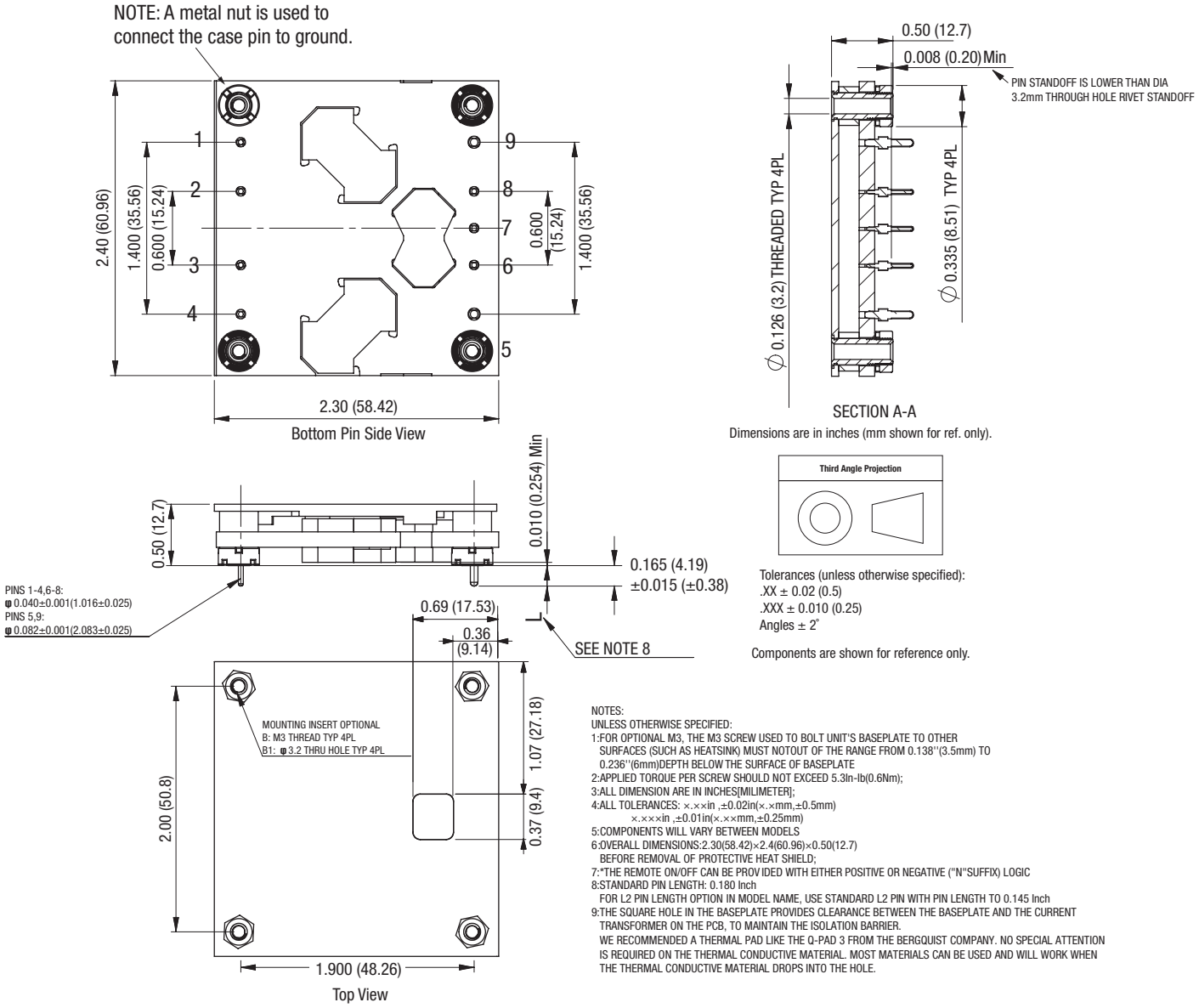

NOTES:
UNLESS OTHERWISE SPECIFIED:
1:FOR OPTIONAL M3, THE M3 SCREW USED TO BOLT UNIT'S BASEPLATE TO OTHER SURFACES (SUCH AS HEATSINK) MUST NOTOUT OF THE RANGE FROM 0.138''(3.5mm) TO 0.236''(6mm)DEPTH BELOW THE SURFACE OF BASEPLATE
2:APPLIED TORQUE PER SCREW SHOULD NOT EXCEED 5.3In-lb(0.6Nm);
3:ALL DIMENSION ARE IN INCHES[MILIMETER];
4:ALL TOLERANCES: ×.××in ,±0.02in(×.×mm,±0.5mm)
×.×××in ,±0.01in(×.××mm,±0.25mm)
5:COMPONENTS WILL VARY BETWEEN MODELS
6:OVERALL DIMENSIONS:2.30(58.42)×2.4(60.96)×0.50(12.7)
BEFORE REMOVAL OF PROTECTIVE HEAT SHIELD;
7:*THE REMOTE ON/OFF CAN BE PROVIDED WITH EITHER POSITIVE OR NEGATIVE ("N"SUFFIX) LOGIC
8:STANDARD PIN LENGTH: 0.180 Inch
FOR L2 PIN LENGTH OPTION IN MODEL NAME, USE STANDARD L2 PIN WITH PIN LENGTH TO 0.145 Inch
9:THE SQUARE HOLE IN THE BASEPLATE PROVIDES CLEARANCE BETWEEN THE BASEPLATE AND THE CURRENT TRANSFORMER ON THE PCB, TO MAINTAIN THE ISOLATION BARRIER.
WE RECOMMENDED A THERMAL PAD LIKE THE Q-PAD 3 FROM THE BERGQUIST COMPANY. NO SPECIAL ATTENTION IS REQUIRED ON THE THERMAL CONDUCTIVE MATERIAL. MOST MATERIALS CAN BE USED AND WILL WORK WHEN THE THERMAL CONDUCTIVE MATERIAL DROPS INTO THE HOLE.

INPUT/OUTPUT CONNECTIONS	
Pin	**Function**
1	–Vin
2	Case ground
3	On/Off Control
4	+Vin
5	+Vout
6	+Sense
7	Trim
8	–Sense
9	–Vout

Since there is some pinout inconsistency between manufacturers of half brick converters, be sure to follow the pin function, not the pin number, when laying out your board.

Standard pin length is shown. Please refer to the Part Number Structure for special order pin lengths.

* Note that the "case" connects to the baseplate (when installed). This case connection is isolated from the rest of the converter. Pin 2 may be deleted under special order. Please contact Murata Power Solutions for information.

The Trim connection may be left open and the converter will achieve its rated output voltage.

BASEPLATE WITH STANDARD M3-12.7 THREADED RIVET

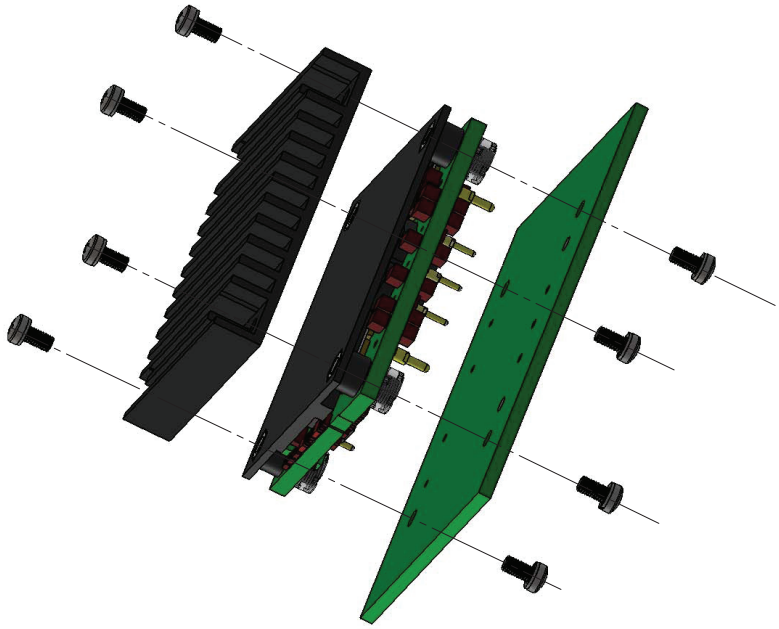

BASEPLATE WITH UNTHREADED INSERT

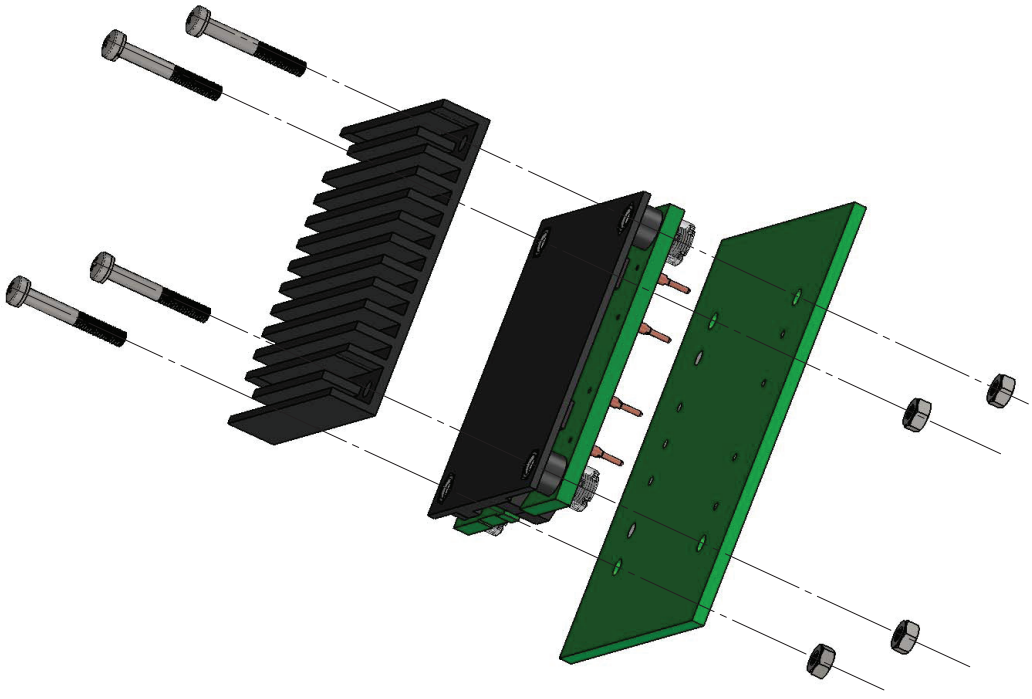

SHIPPING TRAYS: LOW DENSITY CLOSED CELL POLYETHYLENE STATIC DISSIPATIVE FOAM

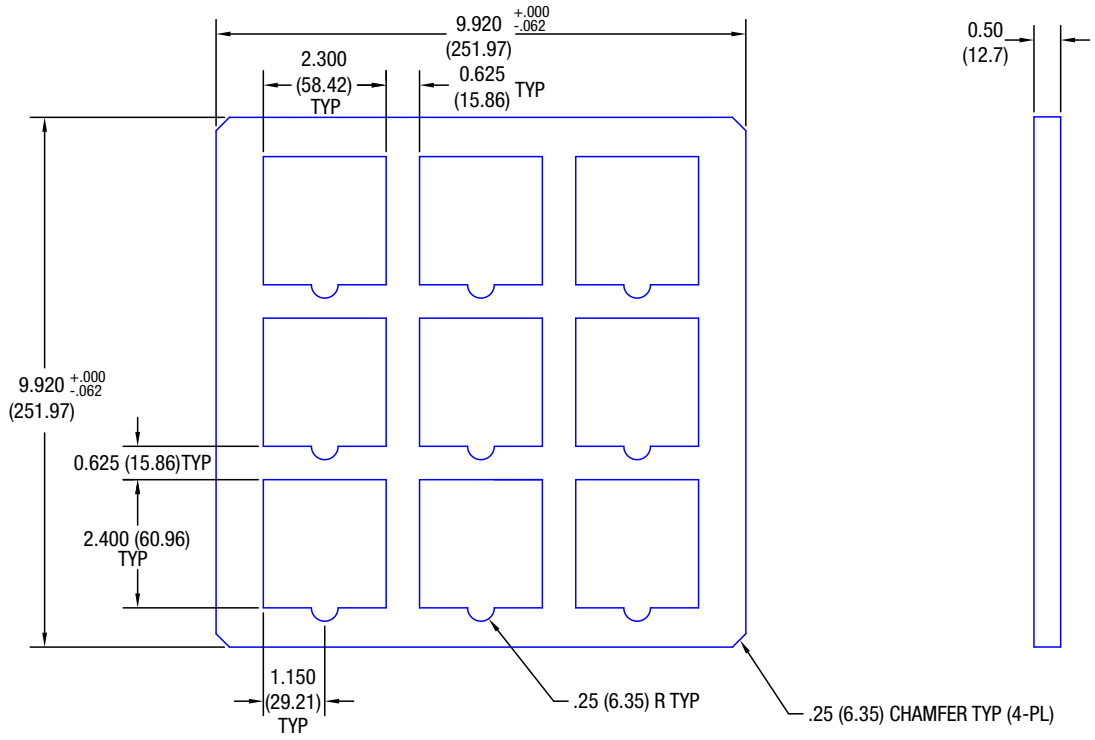

SHIPPING BOXES

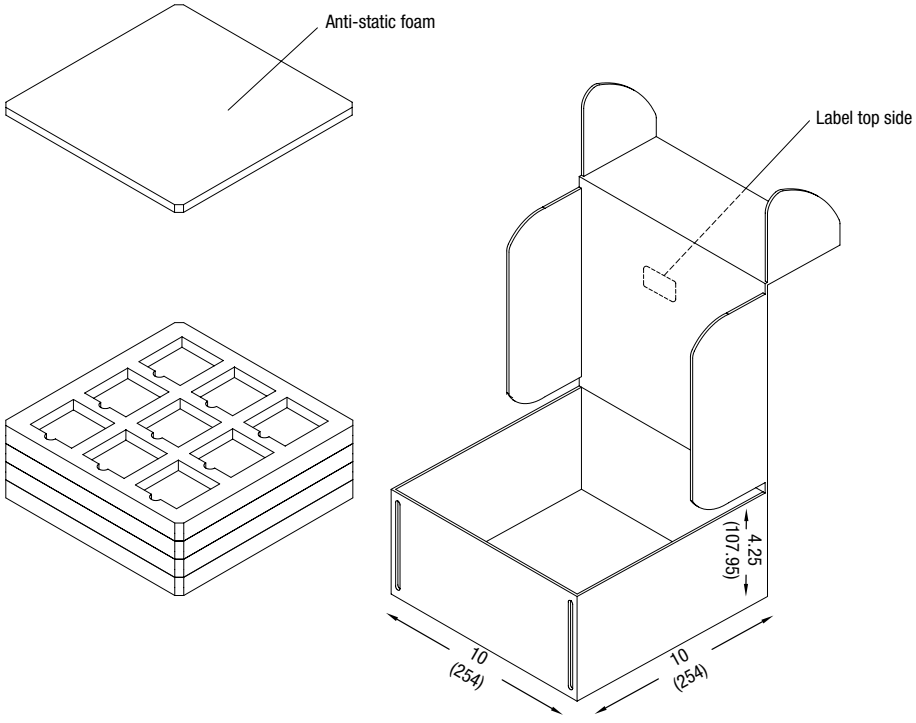

Dimensions are in inches (mm shown for ref. only).

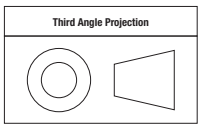

Tolerances (unless otherwise specified):
.XX ± 0.02 (0.5)
.XXX ± 0.010 (0.25)
Angles ± 2°

Components are shown for reference only.

TECHNICAL NOTES

Input Fusing

Certain applications and/or safety agencies may require fuses at the inputs of power conversion components. Fuses should also be used when there is the possibility of sustained input voltage reversal which is not current-limited. For greatest safety, we recommend a fast blow fuse installed in the ungrounded input supply line.

The installer must observe all relevant safety standards and regulations. For safety agency approvals, install the converter in compliance with the end-user safety standard.

Input Reverse-Polarity Protection

If the input voltage polarity is reversed, an internal diode will become forward biased and likely draw excessive current from the power source. If this source is not current-limited or the circuit appropriately fused, it could cause permanent damage to the converter.

Input Under-Voltage Shutdown and Start-Up Threshold

Under normal start-up conditions, converters will not begin to regulate properly until the ramping-up input voltage exceeds and remains at the Start-Up Threshold Voltage (see Specifications). Once operating, converters will not turn off until the input voltage drops below the Under-Voltage Shutdown Limit. Subsequent restart will not occur until the input voltage rises again above the Start-Up Threshold. This built-in hysteresis prevents any unstable on/off operation at a single input voltage.

Users should be aware however of input sources near the Under-Voltage Shutdown whose voltage decays as input current is consumed (such as capacitor inputs), the converter shuts off and then restarts as the external capacitor recharges. Such situations could oscillate. To prevent this, make sure the operating input voltage is well above the UV Shutdown voltage AT ALL TIMES.

Start-Up Time

Assuming that the output current is set at the rated maximum, the Vin to Vout Start-Up Time (see Specifications) is the time interval between the point when the ramping input voltage crosses the Start-Up Threshold and the fully loaded regulated output voltage enters and remains within its specified accuracy band. Actual measured times will vary with input source impedance, external input capacitance, input voltage slew rate and final value of the input voltage as it appears at the converter.

These converters include a soft start circuit to moderate the duty cycle of its PWM controller at power up, thereby limiting the input inrush current.

The On/Off Remote Control interval from On command to Vout regulated assumes that the converter already has its input voltage stabilized above the Start-Up Threshold before the On command. The interval is measured from the On command until the output enters and remains within its specified accuracy band. The specification assumes that the output is fully loaded at maximum rated current. Similar conditions apply to the On to Vout regulated specification such as external load capacitance and soft start circuitry.

Input Source Impedance

These converters will operate to specifications without external components, assuming that the source voltage has very low impedance and reasonable input voltage regulation. Since real-world voltage sources have finite impedance, performance is improved by adding external filter components. Sometimes only a small ceramic capacitor is sufficient. Since it is difficult to totally characterize all applications, some experimentation may be needed. Note that external input capacitors must accept high speed switching currents.

Because of the switching nature of DC-DC converters, the input of these converters must be driven from a source with both low AC impedance and adequate DC input regulation. Performance will degrade with increasing input inductance. Excessive input inductance may inhibit operation. The DC input regulation specifies that the input voltage, once operating, must never degrade below the Shut-Down Threshold under all load conditions. Be sure to use adequate trace sizes and mount components close to the converter.

I/O Filtering, Input Ripple Current and Output Noise

All models in this converter series are tested and specified for input reflected ripple current and output noise using designated external input/output components, circuits and layout as shown in the figures below. External input capacitors (Cin in the figure) serve primarily as energy storage elements, minimizing line voltage variations caused by transient IR drops in the input conductors. Users should select input capacitors for bulk capacitance (at appropriate frequencies), low ESR and high RMS ripple current ratings. In the figure below, the Cbus and Lbus components simulate a typical DC voltage bus. Your specific system configuration may require additional considerations. Please note that the values of Cin, Lbus and Cbus will vary according to the specific converter model.

In critical applications, output ripple and noise (also referred to as periodic and random deviations or PARD) may be reduced by adding filter elements such as

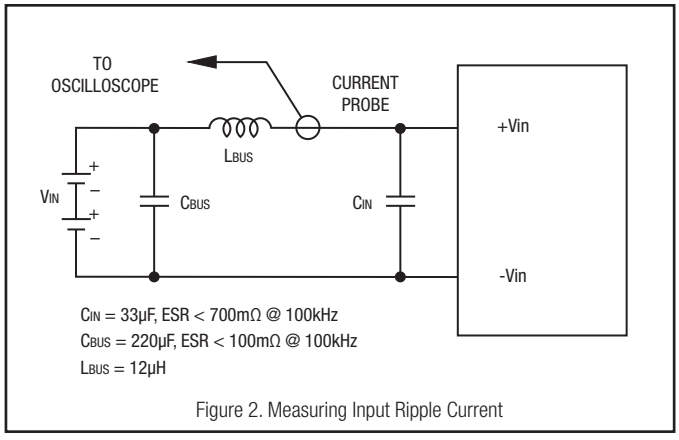

Figure 2. Measuring Input Ripple Current

multiple external capacitors. Be sure to calculate component temperature rise from reflected AC current dissipated inside capacitor ESR. Our Application Engineers can recommend potential solutions.

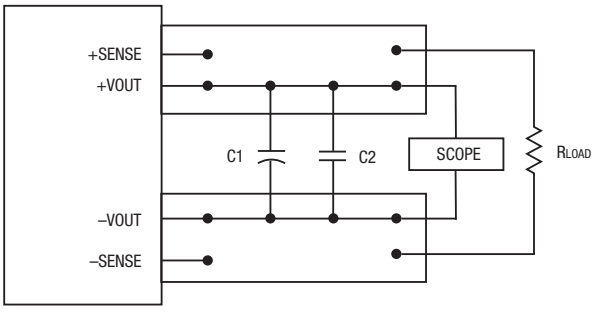

Figure 3. Measuring Output Ripple and Noise (PARD)

Floating Outputs

Since these are isolated DC-DC converters, their outputs are "floating" with respect to their input. The essential feature of such isolation is ideal ZERO CURRENT FLOW between input and output. Real-world converters however do exhibit tiny leakage currents between input and output (see Specifications). These leakages consist of both an AC stray capacitance coupling component and a DC leakage resistance. When using the isolation feature, do not allow the isolation voltage to exceed specifications. Otherwise the converter may be damaged. Designers will normally use the negative output (-Output) as the ground return of the load circuit. You can however use the positive output (+Output) as the ground return to effectively reverse the output polarity.

Minimum Output Loading Requirements

These converters employ a synchronous rectifier design topology. All models regulate within specification and are stable under no load to full load conditions. Operation under no load might however slightly increase output ripple and noise.

Thermal Shutdown

To prevent many over temperature problems and damage, these converters include thermal shutdown circuitry. If environmental conditions cause the temperature of the DC-DC's to rise above the Operating Temperature Range up to the shutdown temperature, an on-board electronic temperature sensor will power down the unit. When the temperature decreases below the turn-on threshold, the converter will automatically restart. There is a small amount of hysteresis to prevent rapid on/off cycling. The temperature sensor is typically located adjacent to the switching controller, approximately in the center of the unit. See the Performance and Functional Specifications.

CAUTION: If you operate too close to the thermal limits, the converter may shut down suddenly without warning. Be sure to thoroughly test your application to avoid unplanned thermal shutdown.

Temperature Derating Curves

The graphs in this data sheet illustrate typical operation under a variety of conditions. The Derating curves show the maximum continuous ambient air temperature and decreasing maximum output current which is acceptable under increasing forced airflow measured in Linear Feet per Minute ("LFM"). Note that these are AVERAGE measurements. The converter will accept brief increases in temperature and/or current or reduced airflow as long as the average is not exceeded.

Note that the temperatures are of the ambient airflow, not the converter itself which is obviously running at higher temperature than the outside air. Also note that very low flow rates (below about 25 LFM) are similar to "natural convection", that is, not using fan-forced airflow.

MPS makes Characterization measurements in a closed cycle wind tunnel with calibrated airflow. We use both thermocouples and an infrared camera system to observe thermal performance. As a practical matter, it is quite difficult to insert an anemometer to precisely measure airflow in most applications. Sometimes it is possible to estimate the effective airflow if you thoroughly understand the enclosure geometry, entry/exit orifice areas and the fan flowrate specifications. If in doubt, contact MPS to discuss placement and measurement techniques of suggested temperature sensors.

CAUTION: If you routinely or accidentally exceed these Derating guidelines, the converter may have an unplanned Over Temperature shut down. Also, these graphs are all collected at slightly above Sea Level altitude. Be sure to reduce the derating for higher density altitude.

Output Overvoltage Protection

This converter monitors its output voltage for an over-voltage condition using an on-board electronic comparator. The signal is optically coupled to the primary side PWM controller. If the output exceeds OVP limits, the sensing circuit will power down the unit, and the output voltage will decrease. After a time-out period, the PWM will automatically attempt to restart, causing the output voltage to ramp up to its rated value. It is not necessary to power down and reset the converter for this automatic OVP-recovery restart.

If the fault condition persists and the output voltage climbs to excessive levels, the OVP circuitry will initiate another shutdown cycle. This on/off cycling is referred to as "hiccup" mode. It safely tests full current rated output voltage without damaging the converter.

Output Current Limiting

As soon as the output current increases to its maximum rated value, the DC-DC converter will enter a current-limiting mode. The output voltage will decrease proportionally with increases in output current, thereby maintaining a somewhat constant power output. This is commonly referred to as power limiting.

Current limiting inception is defined as the point at which full power falls below the rated tolerance. See the Performance/Functional Specifications. Note particularly that the output current may briefly rise above its rated value. This enhances reliability and continued operation of your application. If the output current is too high, the converter will enter the short circuit condition.

Output Short Circuit Condition

When a converter is in current-limit mode, the output voltage will drop as the output current demand increases. If the output voltage drops too low, the magnetically coupled voltage used to develop primary side voltages will also drop, thereby shutting down the PWM controller. Following a time-out period, the PWM will restart, causing the output voltage to begin ramping up to its appropriate value. If the short-circuit condition persists, another shutdown cycle will initiate. This on/

off cycling is called "hiccup mode". The hiccup cycling reduces the average output current, thereby preventing excessive internal temperatures. A short circuit can be tolerated indefinitely.

Remote Sense Input

Sense inputs compensate for output voltage inaccuracy delivered at the load. This is done by correcting voltage drops along the output wiring such as moderate IR drops and the current carrying capacity of PC board etch. Sense inputs also improve the stability of the converter and load system by optimizing the control loop phase margin.

Note: The Sense input and power Vout lines are internally connected through low value resistors to their respective polarities so that the converter can operate without external connection to the Sense. Nevertheless, if the Sense function is not used for remote regulation, the user should connect +Sense to +Vout and –Sense to –Vout at the converter pins.

The remote Sense lines carry very little current. They are also capacitively coupled to the output lines and therefore are in the feedback control loop to regulate and stabilize the output. As such, they are not low impedance inputs and must be treated with care in PC board layouts. Sense lines on the PCB should run adjacent to DC signals, preferably Ground. In cables and discrete wiring, use twisted pair, shielded tubing or similar techniques.

Please observe Sense inputs tolerance to avoid improper operation:

[Vout(+) –Vout(-)] – [Sense(+) – Sense(-)] ≤ 10% of Vout

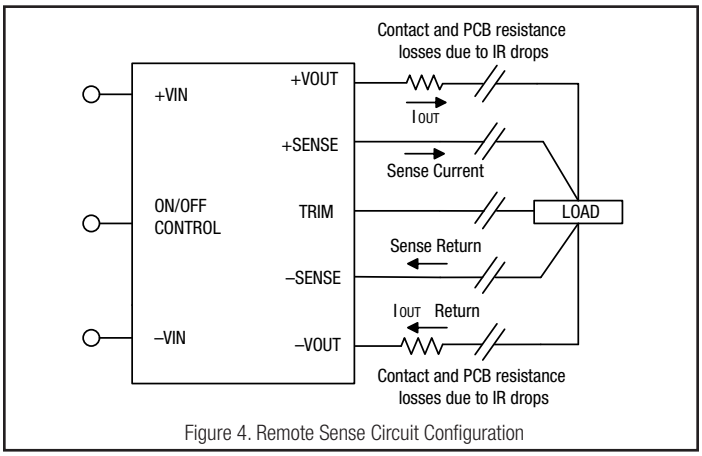

Figure 4. Remote Sense Circuit Configuration

Output overvoltage protection is monitored at the output voltage pin, not the Sense pin. Therefore excessive voltage differences between Vout and Sense together with trim adjustment of the output can cause the overvoltage protection circuit to activate and shut down the output.

Power derating of the converter is based on the combination of maximum output current and the highest output voltage. Therefore the designer must ensure:

(Vout at pins) x (Iout) ≤ (Max. rated output power)

Trimming the Output Voltage

The Trim input to the converter allows the user to adjust the output voltage over the rated trim range (please refer to the Specifications). In the trim equations and circuit diagrams that follow, trim adjustments use either a trimpot or a single fixed resistor connected between the Trim input and either the +Sense or –Sense terminals. (On some converters, an external user-supplied precision DC voltage may also be used for trimming). Trimming resistors should have a low temperature coefficient (±100 ppm/deg.C or less) and be mounted close to the converter. Keep leads short. If the trim function is not used, leave the trim unconnected. With no trim, the converter will exhibit its specified output voltage accuracy.

There are two CAUTION's to be aware for the Trim input:

CAUTION: To avoid unplanned power down cycles, do not exceed EITHER the maximum output voltage OR the maximum output power when setting the trim. Be particularly careful with a trimpot. If the output voltage is excessive, the OVP circuit may inadvertantly shut down the converter. If the maximum power is exceeded, the converter may enter current limiting. If the power is exceeded for an extended period, the converter may overheat and encounter overtemperature shut down.

CAUTION: Be careful of external electrical noise. The Trim input is a senstive input to the converter's feedback control loop. Excessive electrical noise may cause instability or oscillation. Keep external connections short to the Trim input. Use shielding if needed.

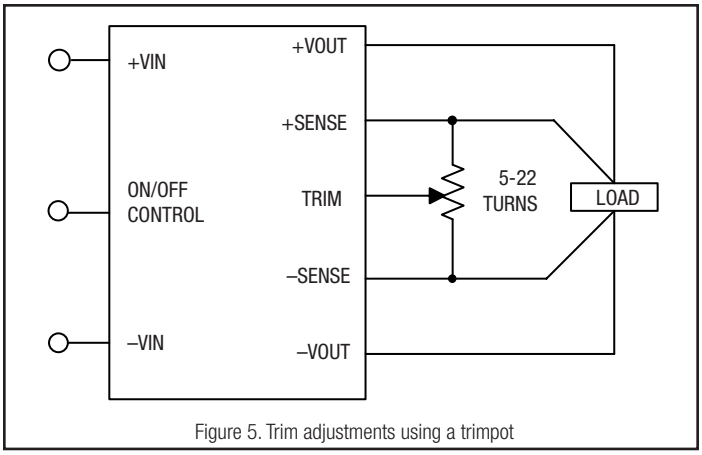

Figure 5. Trim adjustments using a trimpot

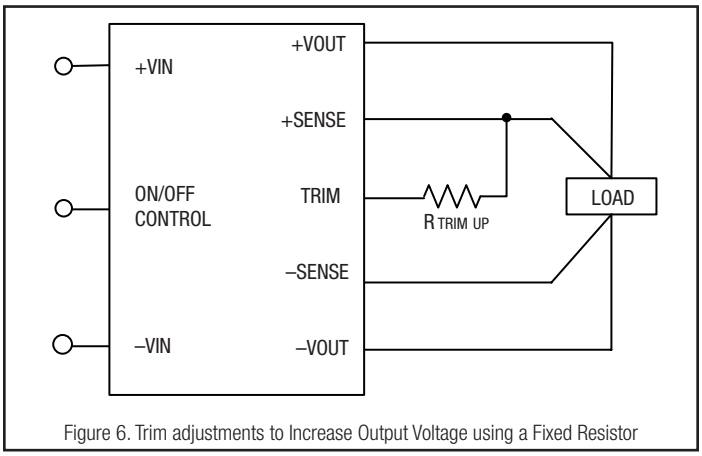

Figure 6. Trim adjustments to Increase Output Voltage using a Fixed Resistor

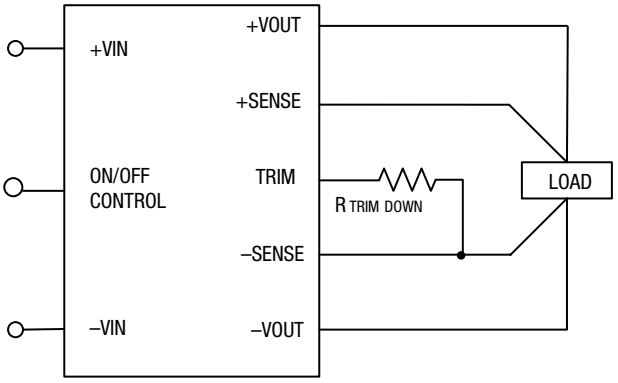

Figure 7. Trim adjustments to Decrease Output Voltage using a Fixed Resistor

Trim Equations

$$R_{adj_up}\ (\text{in k}\Omega) = \frac{V_{nominal} \times (1+\Delta)}{1.225 \times \Delta} - \frac{1}{\Delta} - 2$$

$$\text{where } \Delta = \frac{V_{out} - V_{nominal}}{V_{nominal}}$$

$$R_{adj_down}\ (\text{in k}\Omega) = \frac{1}{\Delta} - 2$$

$$\text{where } \Delta = \frac{V_{nominal} - V_{out}}{V_{nominal}}$$

Where Vref = +1.225 Volts and Δ is the desired output voltage change. Note that "Δ" is given as a small fraction, not a percentage.

A single resistor connected between Trim and +Sense will increase the output voltage. A resistor connected between Trim and –Sense will decrease the output.

Remote On/Off Control

On the input side, a remote On/Off Control can be ordered with either logic type.

Positive models are enabled when the On/Off pin is left open or is pulled high to +15V with respect to –Vin. Some models will also turn on at lower intermediate voltages (see Specifications). Positive-logic devices are disabled when the On/Off is grounded or brought to within a low voltage (see Specifications) with respect to –Vin.

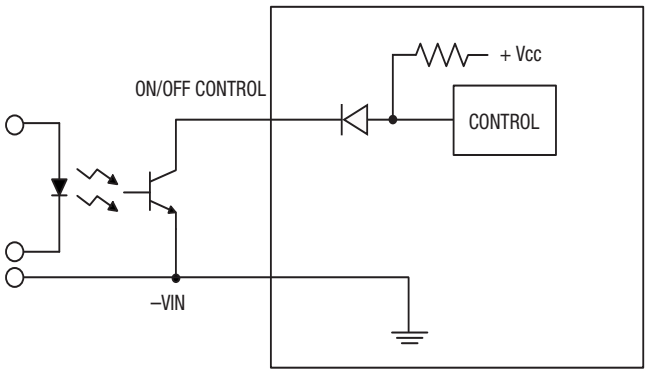

Figure 8. Driving the Positive Logic On/Off Control Pin

Negative-logic devices are on (enabled) when the On/Off is grounded or brought to within a low voltage (see Specifications) with respect to –Vin. The device is off (disabled) when the On/Off is pulled high to +15V with respect to –Vin.

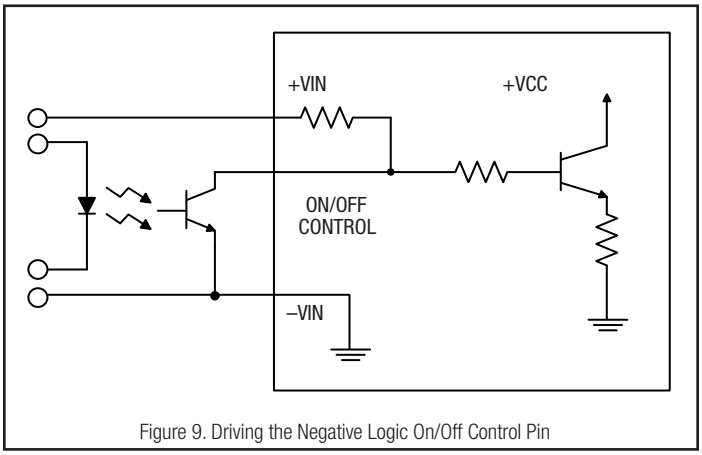

Figure 9. Driving the Negative Logic On/Off Control Pin

Dynamic control of the On/Off function should be able to sink appropriate signal current when brought low and withstand appropriate voltage when brought high. Be aware too that there is a finite time in milliseconds (see Specifications) between the time of On/Off Control activation and stable, regulated output. This time will vary slightly with output load type and current and input conditions.

There are two CAUTIONs for the On/Off Control:

CAUTION: While it is possible to control the On/Off with external logic if you carefully observe the voltage levels, the preferred circuit is either an open drain/ open collector transistor or a relay (which can thereupon be controlled by logic).

CAUTION: Do not apply voltages to the On/Off pin when there is no input power voltage. Otherwise the converter may be permanently damaged.

Soldering Guidelines

Murata Power Solutions recommends the specifications below when installing these converters. These specifications vary depending on the solder type. Exceeding these specifications may cause damage to the product. Your production environment may differ; therefore please thoroughly review these guidelines with your process engineers.

Wave Solder Operations for through-hole mounted products (THMT)			
For Sn/Ag/Cu based solders:		**For Sn/Pb based solders:**	
Maximum Preheat Temperature	115° C.	Maximum Preheat Temperature	105° C.
Maximum Pot Temperature	270° C.	Maximum Pot Temperature	250° C.
Maximum Solder Dwell Time	7 seconds	Maximum Solder Dwell Time	6 seconds

Emissions Performance

Murata Power Solutions measures its products for radio frequency emissions against the EN 55022 and CISPR 22 standards. Passive resistance loads are employed and the output is set to the maximum voltage. If you set up your own emissions testing, make sure the output load is rated at continuous power while doing the tests.

The recommended external input and output capacitors (if required) are included. Please refer to the fundamental switching frequency. All of this information is listed in the Product Specifications. An external discrete filter is installed and the circuit diagram is shown below.

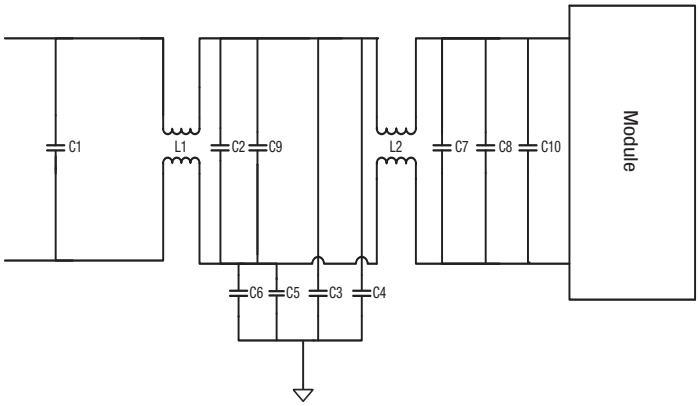

Figure 10. Conducted Emissions Test Circuit

Reference	Part Number	Description	Vendor
C1, C2, C7, C9, C10	GRM32ER72A225KA35L	CAP SMT NON POL CERAMIC X7R 2.2UF 100V 20% 1210	Murata
L1, L2		COMMON MODE-809uH-±25%-9.7A-R5K-28*26*12.7mm	
C3, C4, C5, C6	GRM55DR72J224KW01L	SMD CERAMIC 630V-0.22uF-±10%-X7R-2220	Murata
C8	UHE2A221MHD	Aluminum 100V-33Uf-±10%-long lead	Nichicon

[1] Conducted Emissions Parts List

[2] Conducted Emissions Test Equipment Used

Hewlett Packard HP8594L Spectrum Analyzer – S/N 3827A00153

2Line V-networks LS1-15V 50Ω/50Uh Line Impedance Stabilization Network

[3] Conducted Emissions Test Results

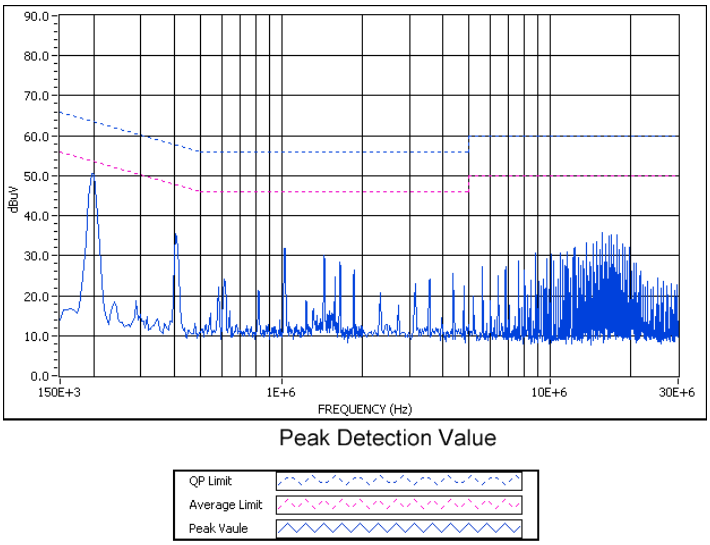

Graph 1. Conducted emissions performance, Positive Line, CISPR 22, Class B, 48 Vin, full load

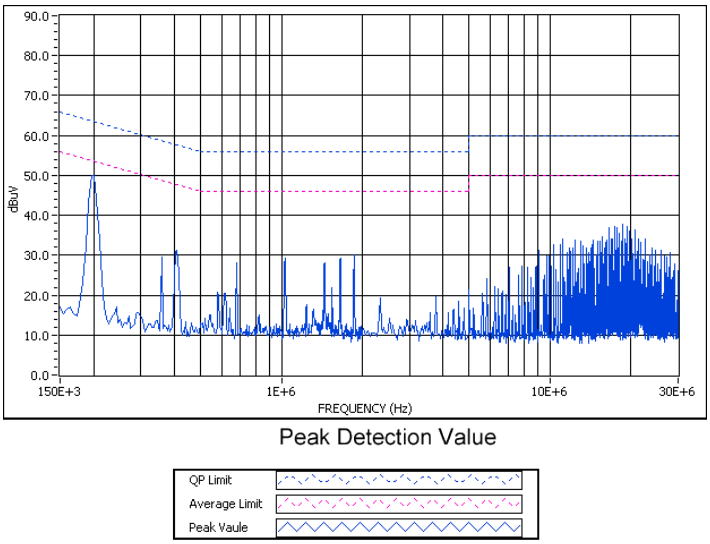

Graph 2. Conducted emissions performance, Negative Line, CISPR 22, Class B, 48 Vin, full load

[4] Layout Recommendations

Most applications can use the filtering which is already installed inside the converter or with the addition of the recommended external capacitors. For greater emissions suppression, consider additional filter components and/or shielding. Emissions performance will depend on the user's PC board layout, the chassis shielding environment and choice of external components. Please refer to Application Note GEAN02 for further discussion.

Since many factors affect both the amplitude and spectra of emissions, we recommend using an engineer who is experienced at emissions suppression.

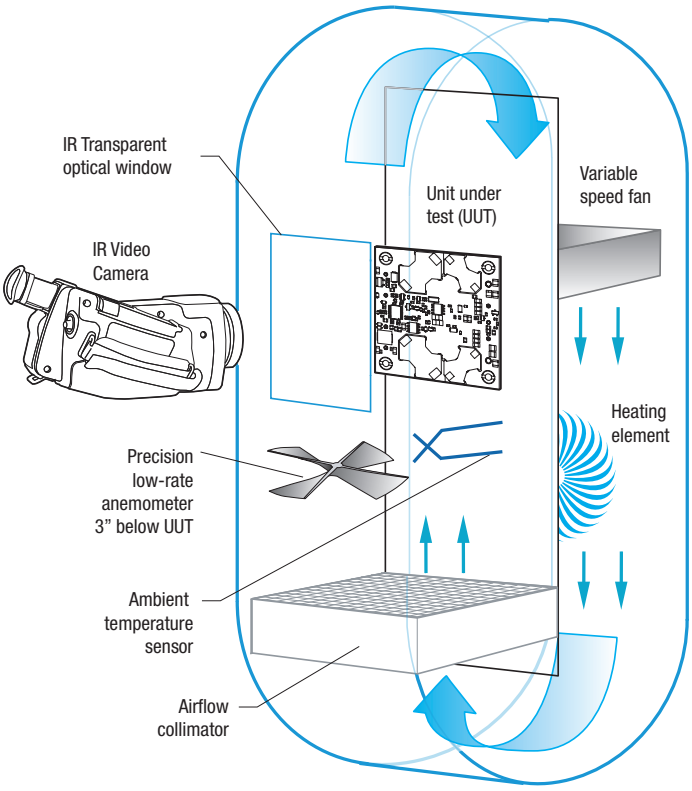

Figure 11. Vertical Wind Tunnel

Vertical Wind Tunnel

Murata Power Solutions employs a computer controlled custom-designed closed loop vertical wind tunnel, infrared video camera system, and test instrumentation for accurate airflow and heat dissipation analysis of power products. The system includes a precision low flow-rate anemometer, variable speed fan, power supply input and load controls, temperature gauges, and adjustable heating element.

The IR camera monitors the thermal performance of the Unit Under Test (UUT) under static steady-state conditions. A special optical port is used which is transparent to infrared wavelengths.

Both through-hole and surface mount converters are soldered down to a 10" x 10" host carrier board for realistic heat absorption and spreading. Both longitudinal and transverse airflow studies are possible by rotation of this carrier board since there are often significant differences in the heat dissipation in the two airflow directions. The combination of adjustable airflow, adjustable ambient heat, and adjustable Input/Output currents and voltages mean that a very wide range of measurement conditions can be studied.

The collimator reduces the amount of turbulence adjacent to the UUT by minimizing airflow turbulence. Such turbulence influences the effective heat transfer characteristics and gives false readings. Excess turbulence removes more heat from some surfaces and less heat from others, possibly causing uneven overheating.

Both sides of the UUT are studied since there are different thermal gradients on each side. The adjustable heating element and fan, built-in temperature gauges, and no-contact IR camera mean that power supplies are tested in real-world conditions.

Murata Power Solutions, Inc. makes no representation that the use of its products in the circuits described herein, or the use of other technical information contained herein, will not infringe upon existing or future patent rights. The descriptions contained herein do not imply the granting of licenses to make, use, or sell equipment constructed in accordance therewith. Specifications are subject to change without notice.
© 2021 Murata Power Solutions, Inc.