SENSECAP

Air Temperature and Humidity Sensor-Data Sheet

Product Model：S-TH-01

Version：V1.0

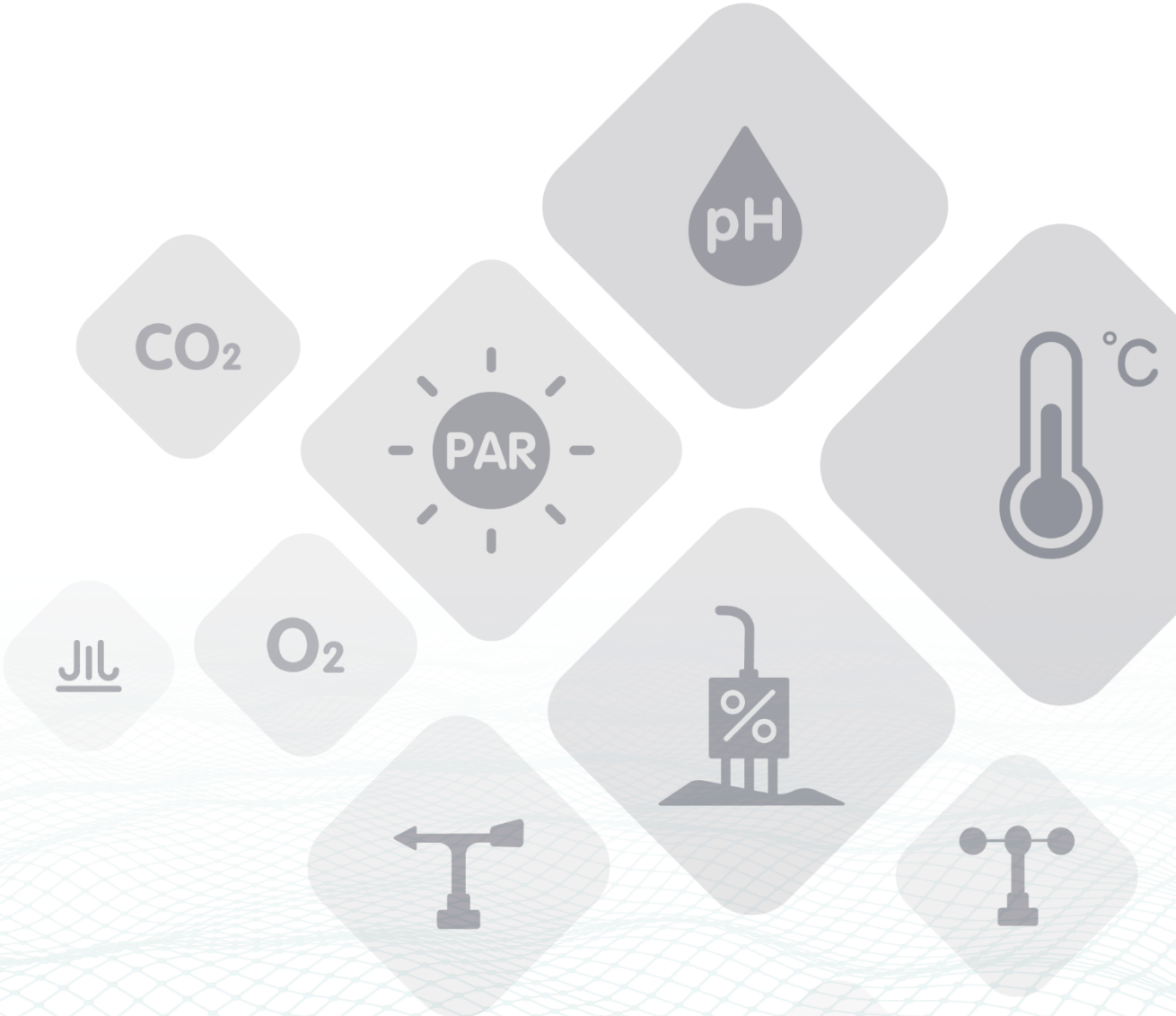

seeed studio The IoT Hardware Enabler ©2008-2020 Seeed Technology Co., Ltd. All rights reserved. www.seeedstudio.com.cn

SENSECAP

Contents

1. Background and Product Introduction 3
    1.1. Background 3
    1.2. Product Introduction 4
2. Sensor Cables 5
3. Model and Size 7
4. Installation and Measurement 8
5. The relationship between output and Humidity, Temperature 9
6. RS485 Communication and Protocol 11
    6.1. Modbus Communication Protocol 11
    6.2. Modbus register 12
    6.3. Detail of Modbus register 15
    6.4. CRC16 Validation and sample code 19
        6.4.1. Function 3 communication samples 19
        6.4.2. Function 4 communication example 20
        6.4.3. Function 16 communication example 21
        6.4.4. CRC16 Verification algorithm and routine 23
    6.5. Using the serial port to adjust the software communication. 27

深圳矽递科技股份有限公司授权使用

1. Background and Product Introduction

1.1. Background

According to the physiologist, the temperature and humidity of the environment can directly affect the thermoregulation and heat conduction of human body. The somatosensory of human body can reflect on the level of mental status and agility of conceptual activities. It can be a vital factor that influences our efficiency of working and study. As experimental analytics, the most comfortable indoor temperature will be 18 degrees and humidity would 40%-60%. There will be specific standard for temperature and humidity with different locations and usage. Therefore, reasonable humidity and temperature controls become necessary.

深圳矽递科技股份有限公司授权使用

1.2. Product Introduction

- Provide high accuracy measurement data .
- Compact temperature, humidity and dew point measurement.
- Standard RS485 output and Modbus-RTU Protocol .
- Multiple installation and user-friendly .
- Outstanding and reliable stableness with high cost performance.

Specification	
Signal Output	RS485 Modbus Protocol
Power supply	3.6-30V/DC
Current Consumption	4mA@24V DC
Humidity Measurement Range	0-100%RH, Resolution 0.01% Accuracy: ±3%RH
Temperature Measurement Range	-40~80°C, Resolution: 0.01°C, Accuracy±0.3°C
IP Rating	IP54
Operating Temperature	-40~85°C
Installation Methods	Wall-mounted Installation and Tube installation
Cable Length	2M
Connection Methods	Aviation connector and Hook-up wire

深圳市创客科技股份有限公司授权使用

2. Sensor Cables

深圳矽递科技股份有限公司授权使用

Sensor Cables spec
Red(V+): VCC+ power supply **Black(G): VCC- power ground** **Yellow(T+): RS485+/A/T+** **WhiteT-): RS485-/B/T**

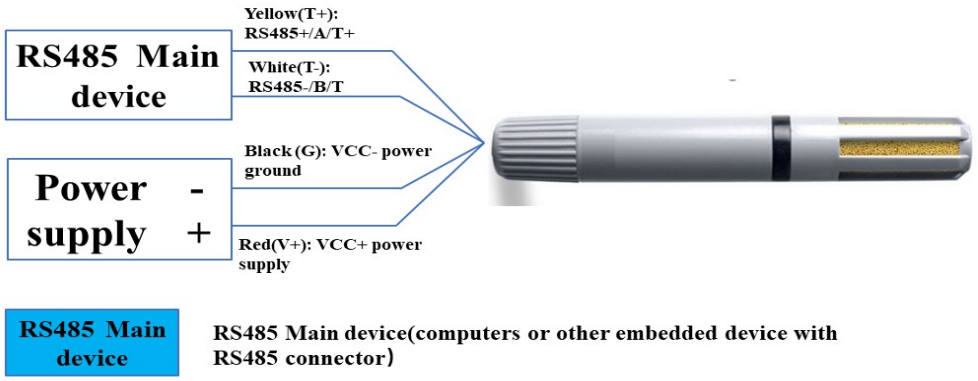

The configuration for the module, such as, Baud rate, Verification, communication protocol etc. is saving in the module named EEPROM. Sometime, the module accidentally forgets the configuration and it cause failing on communication. In order to fix this problem, there is a bottom on the module. Holding the bottom for 3 seconds and the internal light turns off, the module will be setting to default configuration below:

1. Default Modbus address is 1
2. Communication configuration: 9600,N,8,1(9600bps, No verification, 8 data bits, 1 stop bit)
3. Communication Protocol: Modbus-RTU

3. Model and Size

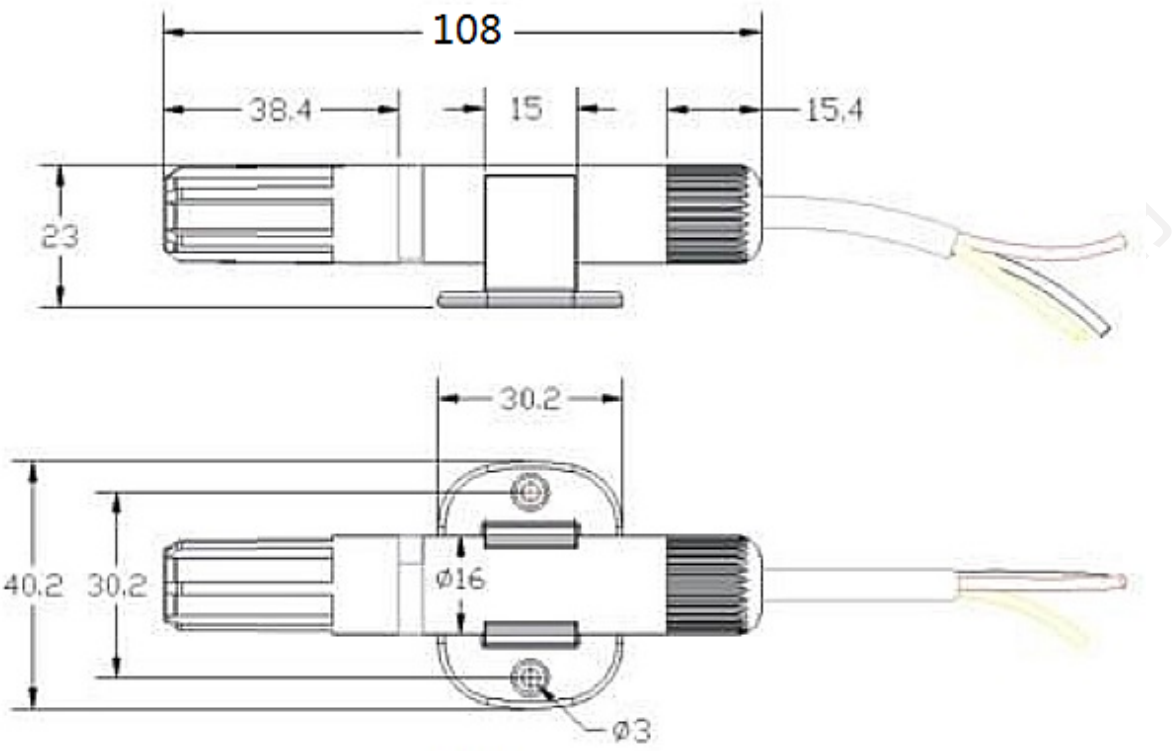

深圳矽递科技股份

4. Installation and Measurement

Wall-mounted or tube design installation：

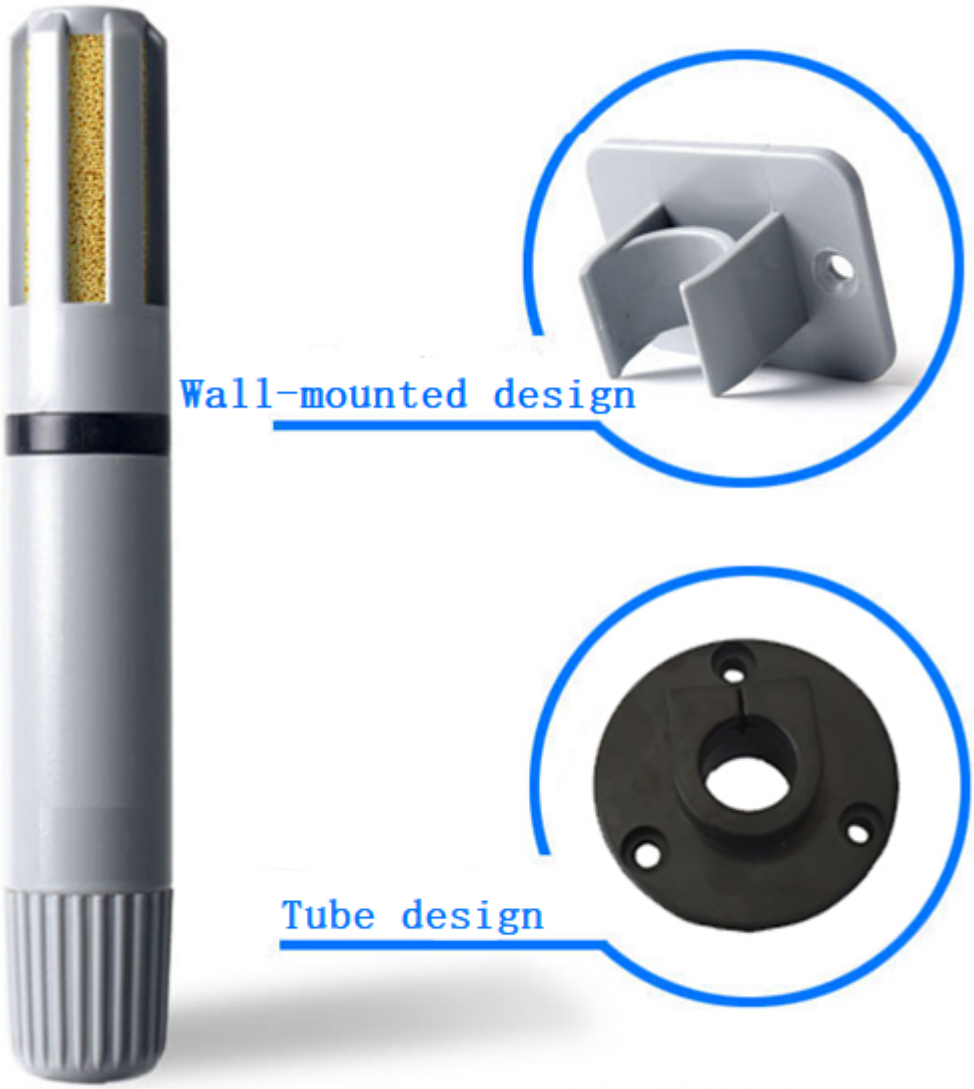

5. The relationship between output and Humidity, Temperature

深圳矽递科技股份有限公司授权使用

Model	Parameter	Relationship
RS485 interface and Modbus Protocol	Temperature: -40-80°C	Temperature=Temperature register/100. For example, if the read data is 2013, the temperature will be 2013/100=20.13°C
	Humidity: 0-100%	Humidity=Humidity register/100. For example, if the read data is 2013, the humidity will be 2013/100=20.13%
	Dew point: -40-80°C	Dew point=Dew point register/100. For example, if the read data is 2013, the Dew point will be 2013/100=20.13°C

深圳矽递科技股份有限公司授权使用

6. RS485 Communication and Protocol

6.1. Modbus Communication Protocol

Modbus is a serial communication protocol, Modicon programmable logic controller (PLC) for the use of published. It has become the industry standard communication protocols, and is now quite common connection between industrial electronic equipment. Modbus has extensive application in the industrial field. Modbus protocol is a master / slave framework agreement. A node is the master node, other nodes using the Modbus protocol in communication from node. Each slave device has a unique address.

Communication parameter default value: baud rate is 9600bps, a start bit, 8 data bits, no parity, one stop bit. Communication protocol for the Modbus RTU protocol. Communication parameters can be set by the program or the Modbus command to change.

深圳矽递科技股份有限公司授权使用

6.2. Modbus register

深圳矽递科技股份有限公司授权使用

Parameter	Register Address	Parameter type	Modbus Function Number	Parameter range and instruction	Default
TEMPRATURE	0x0000/0	INT16 Read only	3/4	-4000-8000= -40.00~80.00°C。	N/A
HUMIDITY	0x0001 /1	UINT16 Read only	3/4	0-10000=0-100%	N/A
DEWPOINT	0x0002 /2	UINT16 Read only	3/4	-4000-8000= -40.00~80.00°C。	N/A
Retain	0x0003/3	INT16 Read only	3/4	N/A	N/A
Modbus ADDRESS	0x0200/512	UINT16 read and write	3/16	0-255	1
BAUDRATE	0x0201/513	UINT16 Read and write	3/16	**0-5** **0:**1200bps **1:**2400bps **2:**4800bps **3:**9600bps **4:**19200bps **5:**38400bps	**3:**9600bps
PROTOCOL	0x0202/514	UINT16 read and write	3/16	0:Modbus RTU	0:Modbus RTU
PARITY	0x0203/515	UINT16 read and write	3/16	0-2 0:No verification 1:even verification 2:odd verification	0: No verification
DATABITS	0x0204/516	UINT16 read and write	3/16	1 1:8 databits	1:8databits
STOPBITS	0x0205/517	UINT16 read and write	3/16	0-1 0:1stopbit 1:2stopbits	0:1stopbits
RESPONSEDELY	0x0206/518	UINT16 read and write	3/16	0	0

矽递科技股份有限公司授权使用

ACTIVEOUTPUT INTERVAL	0x0207/519	UINT16 read and write	3/16	0	0

UINT16:16 unsigned integer register

INT16:16 signed integer register

深圳矽递科技股份有限公司授权使用

6.3. Detail of Modbus register

深圳矽递科技股份有限公司授权使用

TEMPERATURE		
Parameter Range	-4000-8000 = -40.00~80.00°C	Default: None
Parameter storage	None	

Significance: the measured value of the temperature, negative for complement representation.

Example: if the return value is 0702H (16 m, the original code), the first byte byte second byte 07H, low byte is 02H, then the temperature measurement value of (07H*256+02H) /100=17.94 ℃.

If the return value is FF05H (16 m, complement), the first byte byte second byte FFH, low byte is 05H, then the temperature measurement value ((FFH*256+05H) -FFFFH-1H) /100 = (FF05H-FFFFH-1H) /100=-2.51 ℃.

HUMIDITY		
Parameter Range	0-10000=0-100%	Default: None
Parameter storage	None	

Significance: the measured value of humidity.

Example: if the return value is 071DH (16 m), the first byte byte second byte 07H, low byte is 1DH, then the volumetric water content was measured (07H*256+1DH) /10000= (7*256+29) / 10000=18.21%.

DEWPOINT		
Parameter Range	-4000—8000=-40~80.00°C	Default: None
Parameter storage	None	

Significance: the measured value of the dewpoint, negative for complement representation.

Example: if the return value is 0702H (16 m, the original code), the first byte byte second byte 07H, low byte is 02H, then the temperature measurement value of (07H*256+02H) /100=17.94 C.

If the return value is FF05H (16 m, complement), the first byte byte second byte FFH, low byte is 05H, then the temperature measurement value ((FFH*256+05H) -FFFFH-1H) /100 = (FF05H-FFFFH-1H) /100=-2.51 C.

深圳市信浦科技股份有限公司授权使用

SLAVEADDR --- Modbus		
Parameter Range	0-255	Default：17
Parameter storage	Immediately storage	

Modbus address and see between 0-255. After the setting, please reboot the device to re-activate the setting.

BAUDRATE		
Parameter Range	**0-5** **0:**1200bps **1:**2400bps **2:**4800bps **3:**9600bps **4:**19200bps **5:**38400bps	Default:3
Parameter storage	Immediately storage	

After the setting, please reboot the device to re-activate the setting.

PROTOCOL		
Parameter Range	0~1 0:Modbus RTU 1:Modbus ASCii	Default:0
Parameter storage	Immediately storage	

After the setting, please reboot the device to re-activate the setting.

PARITY		
Parameter Range	0-2 0:No verification 1:Even Verification 2:odd Verification	Default:0
Parameter storage	Immediately storage	

After the setting, please reboot the device to re-activate the setting.

DATABITS		
Parameter Range	1 1:8databits	Default:1，8databits
Parameter storage	Immediately storage	

深圳市创客科技股份有限公司授权使用

After the setting, please reboot the device to re-activate the setting.

STOPBITS		
Parameter Range	0-1 0:1stopbits 1:2stopbits	Default:0
Parameter storage	Immediately storage	

After the setting, please reboot the device to re-activate the setting.

RESPONSEDELAY		
Parameter Range	**0-255**	Default:0
Parameter storage	Immediately storage	

Serial communication delay in response to a user in the following cases: when the host sends a request command module, delay (RESPONSEDELAY*10) ms, then the response data is returned to the host computer. For example, set the RESPONSEDELAY=5, then the module delay 5*10=50 ms after the response of host requests. When set to 0 for no delay immediate response. This command is mainly applied to the host from the sending State RS485 switch to slow the receiving state occasions.

ACTIVEOUTPUTINTERVAL		
Parameter Range	0-255	Default:0
Parameter storage	Immediately storage	

Serial communication active output time interval used in the following cases: the host does not need to send a request command, module active output response data, output interval for ACTIVEOUTPUTINTERVAL seconds, such as setting the ACTIVEOUTPUTINTERVAL=5 module, then every 5 seconds according to the communication protocol of the output data set. When set to 0 active output invalid, need a host requests before response. This command is mainly used in GPRS wireless transmission, need to terminal nodes initiatively sends data occasions.
Note: when set to the active output data, RS485 bus can connect a module, in order to avoid data conflict.

深圳市创想科技股份有限公司授权使用

6.4. CRC16 Validation and sample code

Please be advised, any datas that starts with 0x or ends with H is hexadecimal algorithm. Normally, Modbus protocol has 2 frequently used register:

1. Retain register: It saves data even without power supply and for read and write. It usually uses function 3 to read and function 6 to write
2. Input register: It is for saving physical data like temperature and humidity. It uses function 4 to write and write only.

6.4.1.Function 3 communication samples

Request：AA 03 RRRR NNNN CCCC

AA	1databits	Address，Range0-255
03	1databits	Function3
RRRR	2databits	Start address, high data bits at front
NNNN	2databits	Number of read register, high data bits at front
CCCC	2databits	CRC Verification

Request：AA 03 MM VV0 VV1 VV2 VV3… CCCC

AA	1databits	Address，Range0-255
03	1databits	Function3
MM	1databits	Number of data bits return to register
VV0，VV1	2databits	The first return value for register
VV2，VV3	2databits	The second return value for register
…	…	The N return value for register（N=MM/2）
CCCC	2databits	CRC Verification

Example：Example of register 0x0200-0x0201，address and baud rate

Request：01 03 0200 0002 C5B3

Address	1databits	0x01

深圳市创想科技股份有限公司授权使用

Function	1databits	0x03
Start address	2databits	0x0200
Register number	2databits	0x0002
Verification	2databits	0xC5B3

Response：01 03 04 00 01 00 03 EB F2

Address	1databit	0x01
Function	1databit	0x03
Effective databit	1databit	0x04
Slaveregister address	2databits	0x00 (slaveregister address high data bit)
	2databits	0x01(slaveregister address low data bit)
Baud rate address	2databits	0x00 (Baud rate high databits)
	2databits	0x03 (Baud rate low databits)
Verification	2databits	0xEBF2

6.4.2. Function 4 communication example

Request： AA 04 RRRR NNNN CCCC

AA	1databits	Address，Range0-255
04	1databits	Function 4
RRRR	2databits	Start address, high data bits at front
NNNN	2databits	Number of read register, high data bits at front
CCCC	2databits	CRCVerification

Response：AA 04 MM VV0 VV1 VV2 VV3… CCCC

AA	1databits	Address，Range0-255
04	1databits	Function 4
MM	1databits	Number of data bits return to register

深圳矽递科技股份有限公司授权使用

VV0，VV1	2databits	The first return value for register
VV2，VV3	2databits	The second return value for register
…	…	The N return value for register（N=MM/2）
CCCC	2databits	CRC Verification

Example：only read register 0x0000-0x0002, for example read dewpoint, humidity and temperature

Request：01 04 0000 0003 B00B

Address	1databits	0x01
Function	1databits	0x04
Start register address	2databits	0x0000
Number of register	2databits	0x0003
Verification	2databits	0xB00B

响应：01 04 06 08 90 0E 93 02 4E D2 57

Address	1databits	0x01
Function	1databits	0x04
Effective register	1databits	0x06
Temperature register	2databits	0x08
	2databits	0x90
Humidity register	2databits	0x0E
	2databits	0x93
Dew point register	2databits	0x02
	2databits	0x4E
Verification	2databits	0xD257

6.4.3. Function 16 communication example

Request：AA 10 RRRR NNNN MM VVVV1 VVVV2 …CCCC

深圳矽递科技股份有限公司授权使用

AA	1databits	Address，Range0-255
10(Hexadecimal)	1databits	Function 16(decimal system)
RRRR	2databits	Start address, high data bits at front
NNNN	2databits	Number of read register, high data bits at front
MM	1databits	Number of databits write in register
VVVV1	2databits	The first data bits write in register, high data bits at front
VVVV2	2databits	The second data bits write in register, high data bits at front
…	…	The N data bits write in register, high data bits at front N=MM/2
CCCC	2databits	CRC Verification

Response：AA 10 RRRR NNNN CCCC

AA	1databits	Address，Range0-255
10(Hexadecimal)	1databits	Function 16(decimal system)
RRRR	2databits	Start address, high data bits at front
NNNN	2databits	Number of read register, high data bits at front
CCCC	2databits	CRC Verification

Example：Write register 0x0200-0x0201，set slaves address to 1，baud rate is 19200bps

Request：01 10 0200 0002 04 0001 0004 BACC

0x01	1databits	Address
0x10(Hexadecimal)	1databits	Function 16(decimal system)
0x0200	2databits	Start address, high data bits at front
0x0002	2databits	Number of read register, high data bits at front
0x04	1databits	Number of databits write in register
0x0001	2databits	Write slaves address register is 1
0x0004	2databits	Write baud rate register is 4

深圳矽递科技股份有限公司授权使用

0xBACC	2databits	CRC Verification

Response：01 10 0200 0002 4070

0x01	1databits	Address，Range0-255
0x10(Hexadecimal)	1databits	Function 16(decimal system)
0x0200	2databits	Start address, high data bits at front
0x0002	2databits	Number of read register, high data bits at front
0x4070	2databits	CRC Verification

6.4.4. CRC16 Verification algorithm and routine

Routine：

深圳矽递科技股份有限公司授权使用

```
//-----------------------------------------------------------------------
//CRC calculation of C51 language function is as follows
/ / input parameters of 1:snd, to check the byte array name
/ / input parameters of 2:num, the total number of bytes to be calibrated. (2 bytes including CRC check)
/ / function return value: return a value other than 0 check failed. Check back 0.
//-----------------------------------------------------------------------
unsigned int calc_crc16 (unsigned char *snd, unsigned char num)
{
unsigned char i, j;
unsigned int c,crc=0xFFFF;
for(i = 0; i < num; i ++)
{
c = snd[i] & 0x00FF;
crc ^= c;
for(j = 0;j < 8; j ++)
{
if (crc & 0x0001)
{
crc>>=1;
crc^=0xA001;
}
else
{
crc>>=1;
}
}
}
return(crc);
}
```

Example: Read register 0x0000-0x0002, read temperature, humidity and dew point

Request：01 04 0000 0003 B00B （8databits）

Address	1databits	0x01
Function	1databits	0x04
Start register address	2databits	0x0000
Number of register	2databits	0x0003
Verification	2databits	0xB00B

Before the host sends data to the sensor, it stores the data to be verified in the SND array（01 04 00 00 00 03 A total of 6 bytes）， including,num=6

Fake code below：

unsigned char request[8]={01,04,00,00,00,03,00,00};//the last two 00,00is CRC Verification
unsigned char num=6;//CRC Verification for the 6 data
unsigned int crc16=0;
crc16= calc_crc16 (request, num);
request[6]= crc16%256;//saved the CRC verification into the sent data
request[7]= crc16/256;
CommPort.Send(request, 8);//data sent through serial port

Response：01 04 06 08 90 0E 93 02 4E D2 57 （11databits）

Address	1databits	0x01
Function	1databits	0x04
Effective register	1databits	0x06
Temperature register	2databits	0x08
	2databits	0x90
Humidity register	2databits	0x0E
	2databits	0x93
Dew point register	2databits	0x02
	2databits	0x4E
Verification	2databits	0xD257

When the main device received the 11 data bits data sent by the sensor, the main device will do the CRC calculation, num=11

Fake code below：

unsigned char response[11]={ **01 04 06 08 90 0E 93 02 4E D2 57** };//the last two data bits is the CRC verification sent by the sensor
unsigned char num=11;//Calculate the CRC verification of return 11 databits
unsigned int crc16=0;
crc16= calc_crc16 (response, num);
if(crc16==0)

深圳市传感科技股份有限公司授权使用

```
{
    //If the CRC verification succeed, the returned data can be used.
}
else
{
    //If the CRC verification failed, the returned data cannot be used
}
```

The return value is 0 means the verification succeed, if not, means it failed. If the verification failed, means there are errors exist. The device will give up the data and collect the data again.

The return value is 0 means the verification succeed, if not, means it failed. If the verification failed, means there are errors exist. The device will give up the data and collect the data again.

After the verification is succeed, using the formula to calculate temperature(negative number shows as implement), humidity and dew point. Data that ends with H is hexadecimal number.

Temperature =（08H*256+90H）/100=2192/100=21.92°C

Humidity =（0EH*256+93H）/100=3731/100=37.31%

Dew point =(02H*256+4EH)/100=590/100 =5.9°C

深圳矽递科技股份有限公司 授权使用

6.5. Using the serial port to adjust the software communication.

Users can use any serial debugging software to communicate with the sensor. It is necessary to select the correct serial port, baud rate, and other serial port communication parameters, and send and receive data in hexadecimal transmission and display.

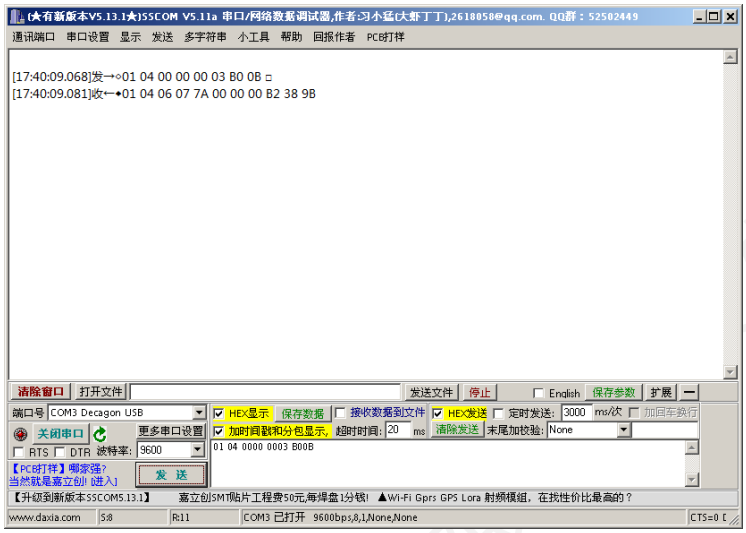

深圳矽递科技股份有限公司 版权使用