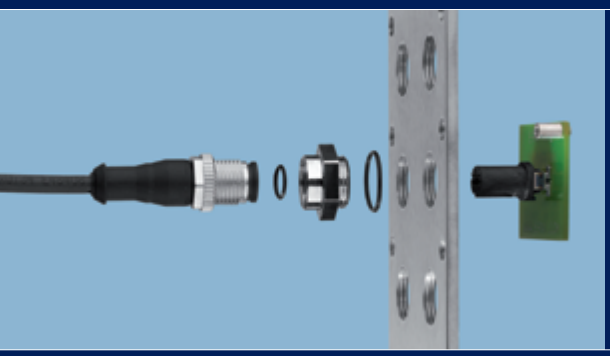

M8/M12 Circular Connectors

www.erni.com

| Catalog E 074554 | 03/10 | Edition 4 |

www.erni.com

| Catalog E 074554 | 03/10 | Edition 4 |

M8/M12 Circular Connectors

Table of Contents

General 2
Coding 4
Installation Conditions 5
Electrical and Mechanical Characteristics PCB Connectors 10
Electrical and Mechanical Characteristics Cable Assemblies 12
Electrical and Mechanical Characteristics Quick Termination 13
Electrical and Mechanical Characteristics Accessories 14
Packaging 15
M8 Female PCB Connectors 16
M8 Male PCB Connectors 18
M8 Cable Assemblies 20
M8 Quick Termination 25
M12 Female PCB Connectors 28
M12 Male PCB Connectors 33
M12 Male PCB Connectors for Direct Integration 39
M12 Cable Assemblies 42
M12 Quick Termination 48
Accessories Adapter 50
Accessories T-Coupler 52
Accessories Panel Feed-Through 54
Part Number Index 56

M8/M12 Circular Connectors

General

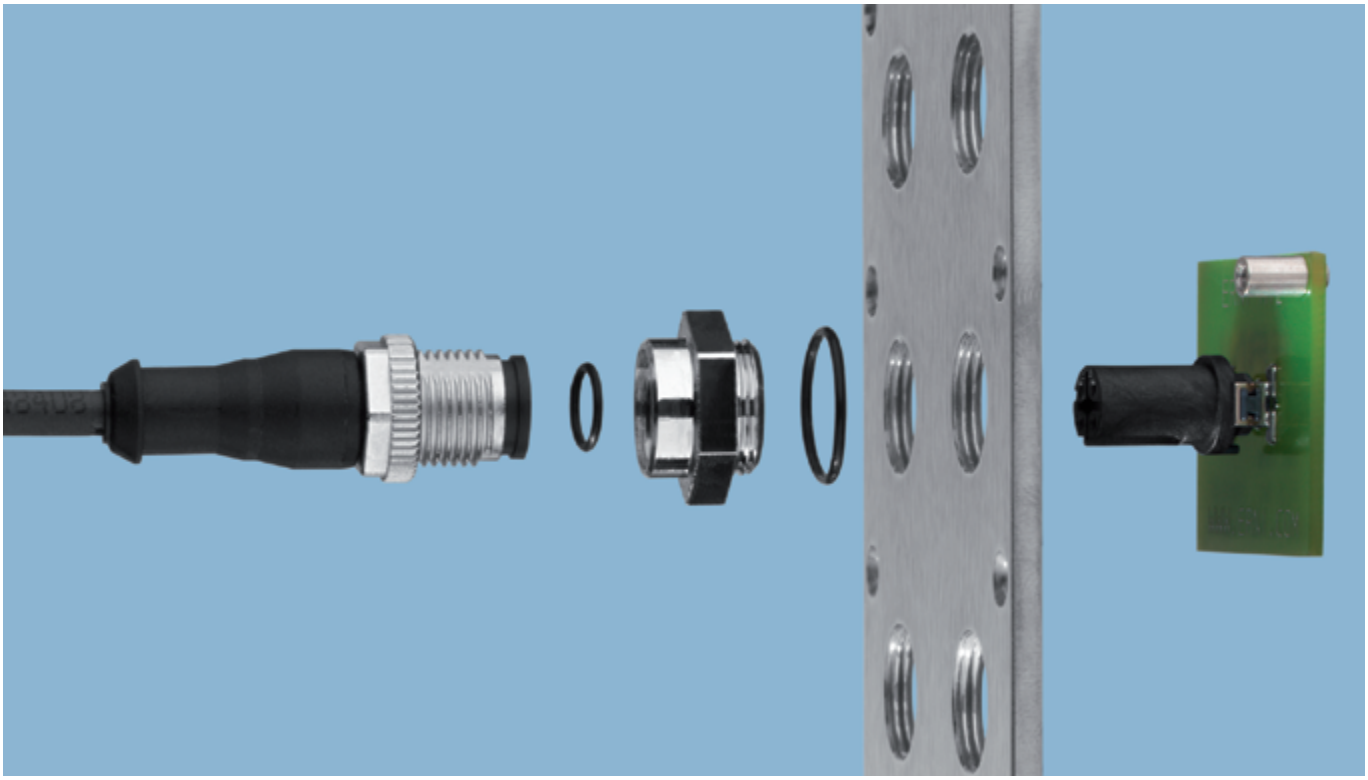

Since the end of the ‚80s, the trend of integrating more and more electronics and intelligence in machines has rapidly gained momentum. Whereas before, only controls in a switch cabinet regulated actuator or sensor systems by way of so-called I/O cards, today there is an increasing number of intelligent field devices outfitted with local I/Os and connected to the switch cabinet via a fieldbus or even have the entire control system on board.

Up until this point in time, M8 and M12 connectors were only referred to and used as sensor connectors. The open end of the sensor cable was routed in the switch cabinet and wired there. Today, sensors and actuators in the field frequently are connected to a passive I/O box or one with fieldbus capability. The harsh influences of the environment on these boxes make proven and, particularly, tightly sealed (IP 65/67) connectors a necessity. As such, it only made sense to use the M8 or M12 connector systems here as well, which already had established themselves in the field of sensor technology. Meanwhile, the M12 connector also is recommended as a fieldbus connector for almost all field bus applications. To make sure that nothing gets mixed up, there are a series of codes for assistance.

ERNI, the known specialist for printed circuit board connectors, has seized an opportunity. Today, there still is an insufficient number of connector types for these boards. As field devices are very specific, a wide variety of flexible modular connectors is required in order to implement these applications with as little effort and expense as possible.

International Standards for M8/M12 connectors

- IEC 60947-5-2 low voltage sensor switch device
- IEC 61076-2-101 form factor M12 further polarizations for M12
- IEC 61076-2-104 form factor M8 further polarizations for M8
- Profibus installation guideline
- Interbus Club specification
- IAONA, Industrial Ethernet, planning and installation guide
- SafetyBUS
- DeviceNet

PCB Connectors



ERNI has developed such a modular system with M8/12 connectors that is fully flexible in application and has SMT connections that are so robust that bulk packaging and feeding are possible. The connector has also been designed for tape-on-reel packaging. The concept allows connectors to be produced at various heights and with different pin configurations. The black insulator is made of high-temperature plastic, and is suitable for soldering with all the usual SMT soldering procedures. The new M8/M12 connectors are designed for lead-free processing, which is mandatory since July 2006. Especially cost cutting by reduction of printed circuit board surface is achieved. In specific applications, two printed circuit boards can be replaced by one. A pick & place pad for female connectors is not required while using a gripper or special pipette.

Cable Assemblies



As a completion to the product portfolio ERNI Electronics also offers cable assemblies for the connection of sensors/actuators or other automation systems devices such as I/O distribution boxes. The standard product range covers pre-assembled, over-moulded circular connectors of sizes M8 and M12 either as interconnection of two circular connectors or as a cord set having an open end of line.
In addition, the portfolio comprises of field-attachable connectors for tool-less cable termination, T-coupler, panel feed-throughs and adapter for quick and cost-efficient connection in the field. ERNI extends the variety with different cable qualities that meet the most versatile industrial requirements and therefore are applicable for a wide range of use. PVC as a competitive and economic solution or PUR (UL/CSA approved), halogenfree and UV resistant, for highly demanding applications in drag chains and harsh environments – where operational reliability is crucial. Innovative product features like the self-securing screw locking guarantee vibration-proof and secure connection. The coupling nut additionally combines a knurled surface with a spanner flat suitable for standard wrenches.
Different configurations, designs and codings are available from stock. All parts meet IP67 requirements (IEC 60529) to ensure protection against dust and water immersion. ERNI's pre-assembled cable assemblies use standard-wise two cable qualities in five different lengths. Further options are possible on request.

PVC

- qualified cable for medium mechanical load and usage of non-recurrent stress, i.e. for assembly lines
- easy to dismantle
- good chemical resistance
- limited resistance against abrasion and lubricants
- the competitive and economic solution for less demanding applications

PUR

- cable for heavy-duty applications in harsh environments and continuous stress, i.e. during metal cutting operations
- drag chain capable
- highly resistant against abrasion
- very good resistance against oil, lubricants, coolants and other aggressive chemicals
- halogen-free, hydrolysis and UV resistant
- flame retardant
- reliable solution for highly demanding applications; UL/ CSA approved

As a proven specialist for printed circuit board connectors, ERNI Electronics has expanded its expertise towards industrial customers i.e. from automation technology and process industry by offering highly flexible and modular solutions, which consequently emphasize the idea of decentralised automation systems.

Polarizations according to IEC 61076-2-101 for M12 male connectors



A - Polarization (sensor/actuator applications, DeviceNet CANopen)



B - Polarization (fieldbus applications like Profibus, Interbus)

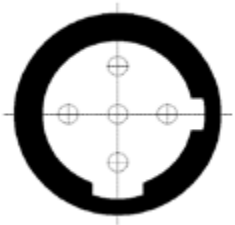

C - Polarization / not introduced yet on the market

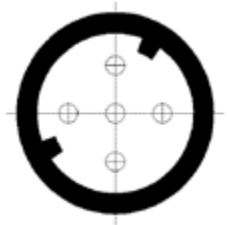

P - Polarization (4 Signal + PE) / not introduced yet on the market

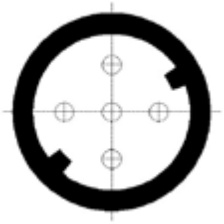

D - Polarization (5 Pin for Data-Applications) / not introduced yet on the market

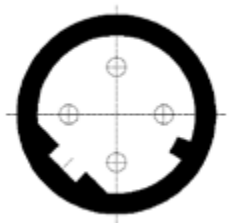

D - Polarization (4 Pin for Industrial Ethernet, Fast Ethernet 100 Mbit/s)

Assembly of M8/M12 PCB connectors

ERNI recommends two standard assembly heights. The usable connectors are the same for both heights. Based on a 3 mm thick front plate there are distances of 9 mm and 13 mm applicable with the according metal shells. The shells need to be fixed via thread in the front plate. To ensure the protection class IP65/67 it is necessary to remain within the recommended tolerances of 9 mm ±0.1 or 13 mm ±0.1.
The 9 and 13mm distances allow the use of standard spacers which enable a proper fixing to the pcb.

Examples for mixed M8 pcb assembly

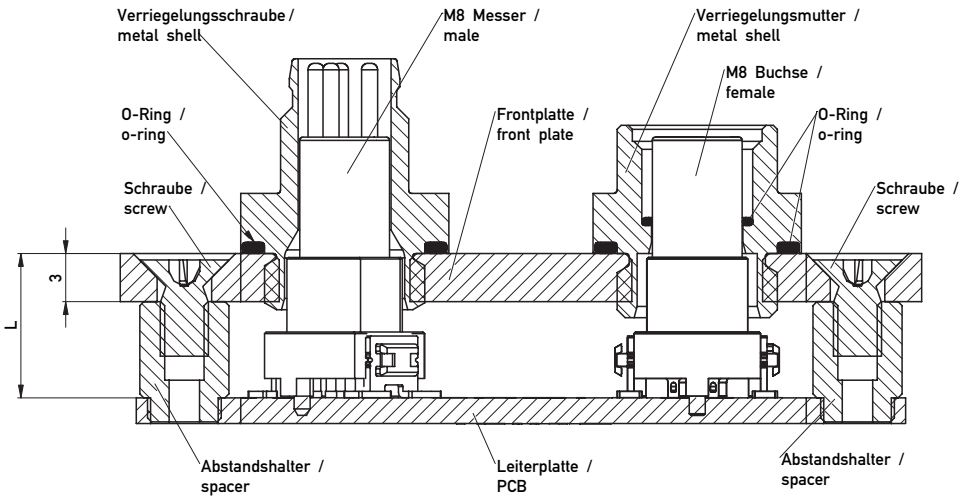

13
9
Bauhöhe L / assembly height

Examples for mixed M12 pcb assembly

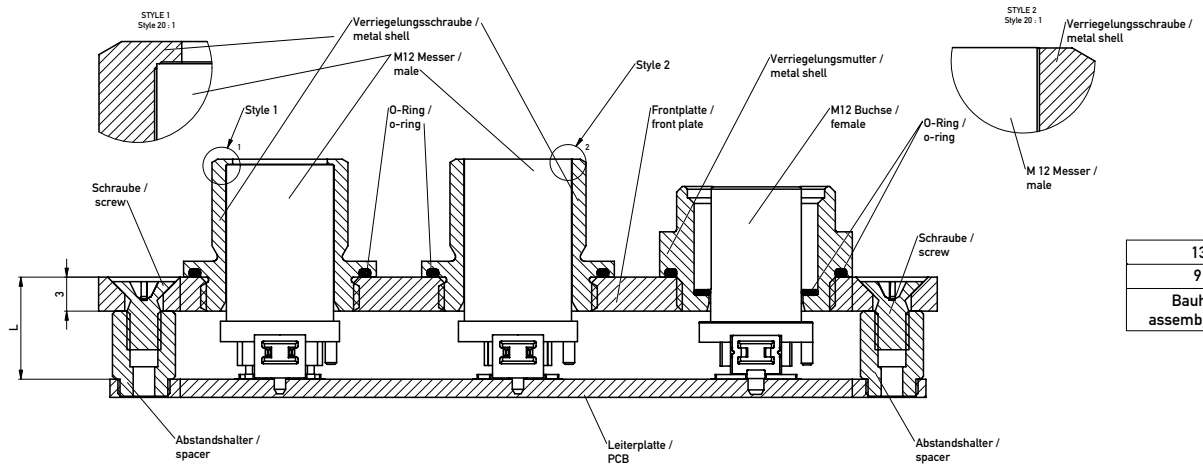

13
9
Bauhöhe L / assembly height

Style 1 prevents pressure on the o-ring when connectors are mated. The forces are absorbed by the metal shell, which protects the top surface of the pcb male connector from a direct o-ring contact.
Style 2 allows more flexibility regarding tolerances in vertical direction.

Tightening force for all metal shells is 1.5 Nm ±0.2

The mounting thread for M12 shell is M14x1 and for the M8 shell is M10x1. For mechanical issues the front panel thickness should be 3 mm thick and for proper sealing (O-Ring) the surface around the thread hole should have no damage and be of quality R max 16 µm. Please regard thickness of platings in conjunction with front panel threads. Regarding EMV issues the front plate or its plating should be conductive with the metal shell and have at least an Ni plating.

Example for mixed M12 PCB assembly, front plate thickness 1 mm, assembled with counternut

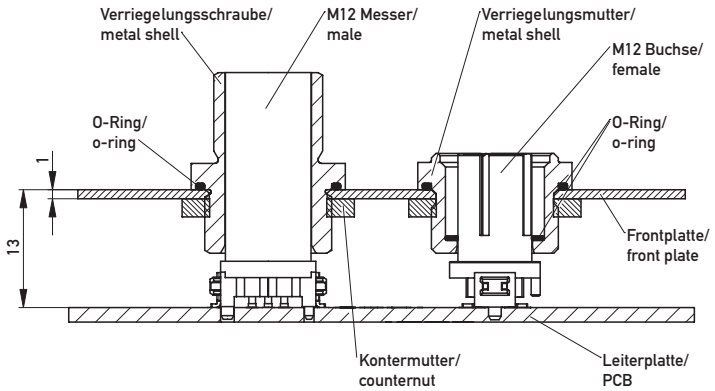

For the assembly option with a counternut there is no thread in the front plate necessary. This option is suitable for a front plate thickness beginning at 1 mm up to 4 mm.

M12 male with additional sealing option.

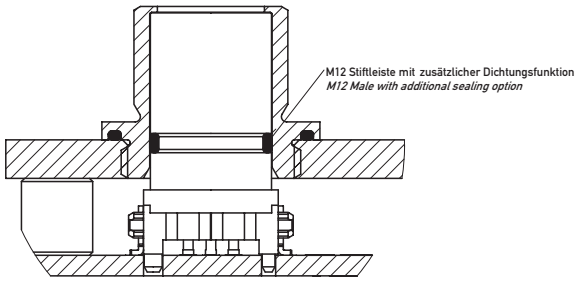

Sensor and actuator applications in harsh industrial environment need to be sealed against liquids. Those devices have often abackfilling with gel or resin (epoxy) and therefore a sealing is required to keep the infill inside of the housing. On the other hand there are devices which should be protected against moisture and liquids from outside; especially also during installation if the connector interface is open (not connected to a cable). For this requirements the ERNI M12 male connector with additional sealing option is the best fit. A standard O-ring 7x1 can be used. The connector is always delivered without O-ring.

M12 Connector for Direct Integration

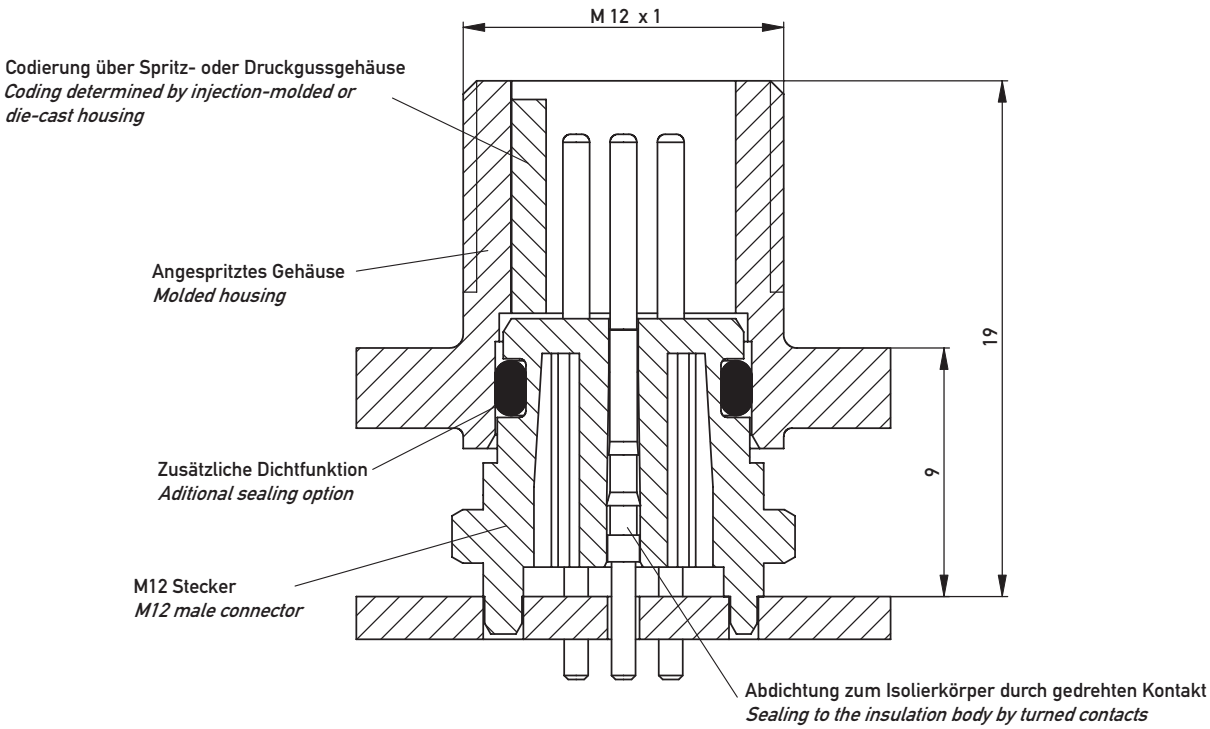

Automation components make considerable contributions to efficiency increases in production but are also subject to extreme cost pressure. To save costs, this M12 connector version can be „directly“ integrated, meaning that the device housing thus becomes part of the connector since it can be produced in a single operation with the coding and the locking thread.

Potential savings: fully-automatic SMT soldering process and saving of threaded parts as well as their assembly share.

The coding is determined by means of the injection-molded or die-cast housing. Refer to the IEC 61076-2-101 for the dimensions for this. The sealing of the housing is performed via an O-ring, the assembly of which is optional. In addition, the turned contact seals the insulating body by means of special contours. The entire system is thereby water-proof, even when unconnected. Tightness with regard to casting compounds typically exists. This, however, must be tested in the respective project with the respective casting compound. Considerably different coefficients of expansion of the materials may lead to the necessity of the use of THR technology for better absorption of the forces that may affect the solder joints with casting technology due to temperature cycles and loads from vibrations and shocks.

Front panel with recommended distance between M8 PCB connectors

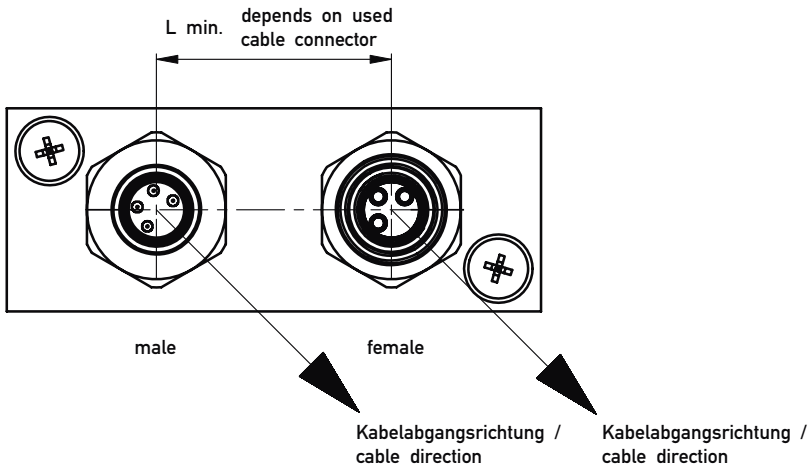

Front panel with recommended distance between M12 PCB connectors

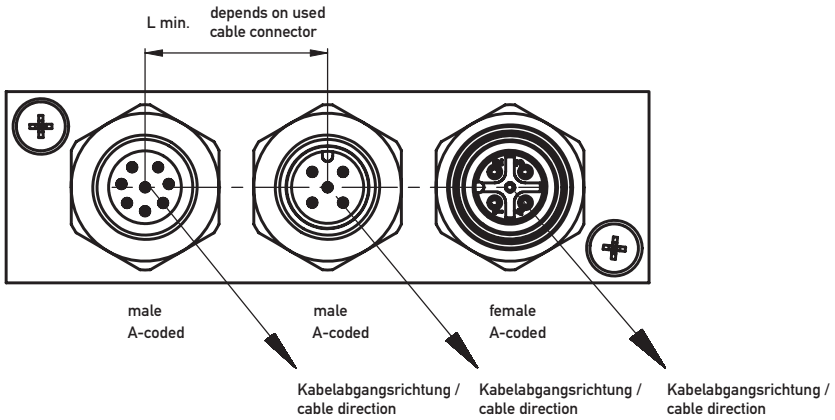

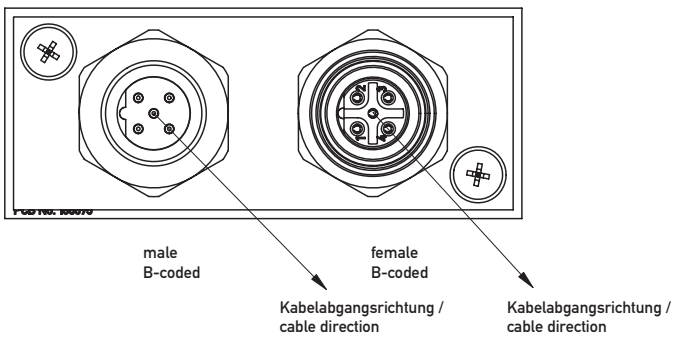

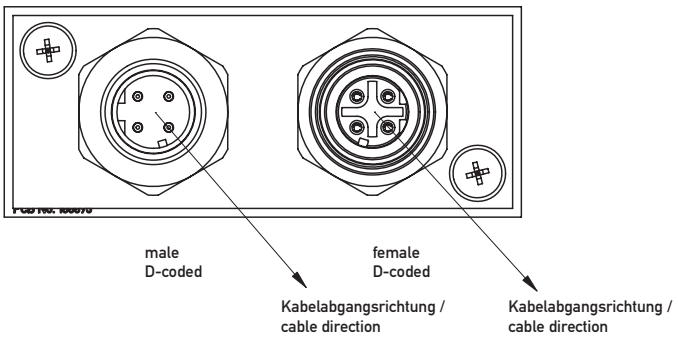

Examples and sealing options for ERNI M8/M12 connectors combined with integrative metal shells

The solutions shown earlier should give further ideas, how the ERNI M8/M12 pcb connectors also could be used.
The mentioned solutions are not offered yet as standard parts. Of course ERNI is able to offer similar customized parts on request.

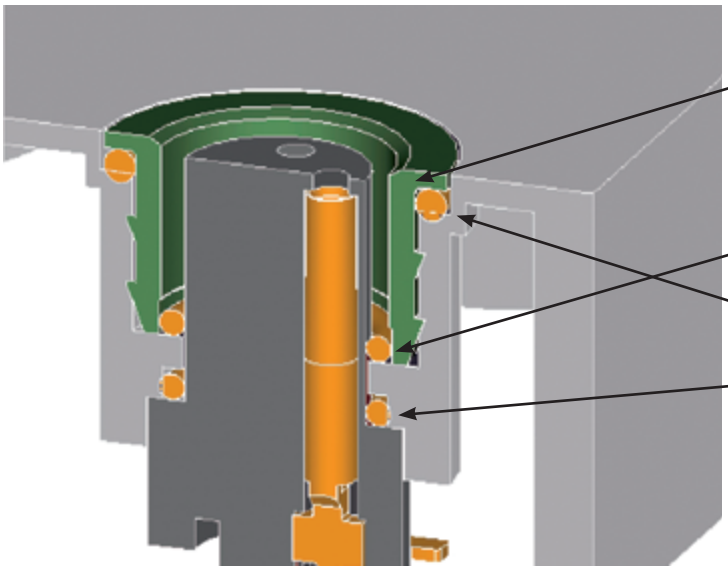

Technologies for integrating the metal shell: Insert molding,
heat setting,
ultrasonic setting,
press-in technique.

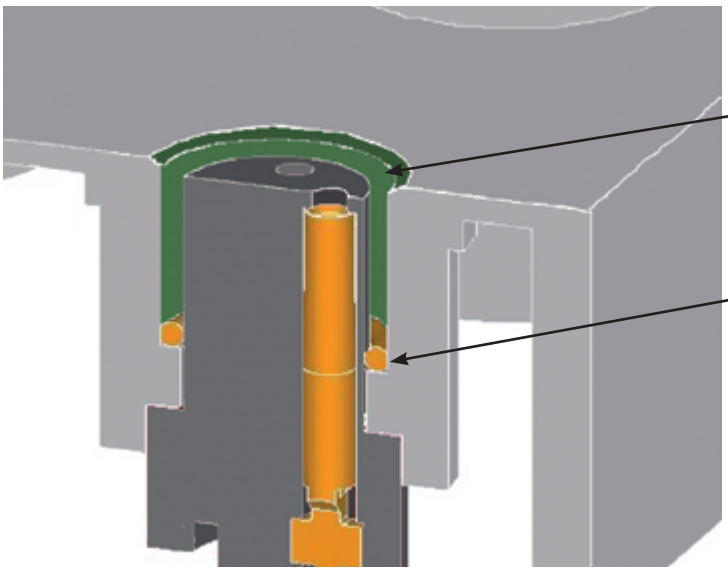

M8/M12 Circular Connectors

Electrical and Mechanical Characteristics

	Standard	M8	M12
Number of pins		3, 4	4, 5, 8
Technical data			
Climate category	DIN EN 60068-1 test b	55/125/56	55/125/56
Temperature range		-55/125 °C	-55/125 °C
Current rating per contact	IEC60512 test 5b	By ambient temperature 20 °C 5.7 A 40 °C 4.8 A 70 °C 2.6 A	By ambient temperature 4, 5 pin 8 pin 20 °C 4.8 A 40 °C 4.1 A 2.0 A 70 °C 2.5 A
Air- and creepage distance		0.8 mm	1.1 mm (4, 5 pin) 1.0 mm (8 pin male); 0.4 mm (8 pin female)
Operating voltage	IEC 60664	The permissible operating voltages depend on the customer application and on the applicable or specified safety requirements. Insulation coordination according to IEC 60664-1 has to be regarded for the complete electrical device. Therefore, the maximum creepage and clearance distances of the mated connectors are specified for consideration as a part of the whole current path. In practice, reductions in creepage or clearance distances may occur due to the conductive pattern of the printed board or the wiring used, and have to be taken into account separately. As a result the creepage and clearance distances for the application may be reduced compared to those of the connector.	
Dielectric strength	IEC 60512 test 4a	3 pin: contact - contact 1000 V_{rms} 4 pin: contact - contact 650 V_{rms}	4 pin: contact - contact 1400 V_{rms} 5 pin: contact - contact 1000 V_{rms} 8 pin: contact - contact 650 V_{rms}
Contact resistance	IEC 60512 test 2a	< 10 mΩ	< 10 mΩ
Insulation resistance	IEC 60512 test 3a	> 10^{12} Ω	> 10^{12} Ω
Vibration, sine	IEC 60512 test 6d	10 – 500 Hz 5 g	10 – 500 Hz 5 g
Contact disturbance (during vibration test)	IEC 60512 test 2e	< 1 µs	< 1 µs
Shock, halfsine	IEC 60512 test 6c	50 g 11 ms	50 g 11 ms
Contact disturbance (while shock test)	IEC 60512 test 2e	< 1 µs	< 1 µs
Mechanical operation (mating cycles)	IEC 60512 test 9a	> 100 mating cycles	> 100 mating cycles
Insertion and withdrawal force	IEC 60512 test 13b	max. 23 N	max. 23 N
Gauge retention force	IEC 60512 test 16e	> 0.2 N	> 0.2 N

Electrical and Mechanical Characteristics
PCB Connectors

	Standard	M8	M12
Number of pins		3, 4	4, 5, 8
Process-conditions			
Solder temperature max.	IEC 68-2-20		
Hand soldering temperature max.		3.5 s at 350 °C	3.5 s at 350 °C
Dip soldering temperature max.		10 s at 260 °C	10 s at 260 °C
Reflow soldering temperature max.	JEDEC J-STD-020C	20 - 40 s at 260 °C	20 - 40 s at 260 °C
Coplanarity of SMT		< 0.1 mm	< 0.1 mm
Stencil thickness min.		150 µm	150 µm
Housing Materials			
Plastic material (symbol)		LCP	LCP
CTI value	IEC 112	CTI 200	CTI 200
UL flame rating		UL 94 V-0	UL 94 V-0
UL file		E83005	E83005
Contact Materials			
Base material		Cu alloy	Cu alloy
Mating area		gold plated	gold plated
Termination area		gold plated (male) Sn (female)	gold plated (male) Sn (female)
Environment compatibility			
Recycling		no flame-retardent additives, no toxic additives allows easy recycling	
Approvals			
Protection class	IEC 60529	IP 67 (mated connector/cable)	IP 67 (mated connector/cable)

	Standard	M8 Cable	M12 Cable
Number of pins		3, 4	4, 5
Technical specification			
Coding		A	A
Connection		Screw locking M8x1 (max. tightening force 0.4 Nm)	Screw locking M12x1 (max. tightening force 0.6 Nm)
Cable data			
Jacket material		PUR, PVC	PUR, PVC
Jacket diameter		3 pins 4 pins PUR 4.1 mm 4.4 mm PVC 4.4 mm 4.7 mm	4 pins 5 pins PUR 4.7 mm 5.0 mm PUR,shielded 6.5 mm 7.0 mm PVC 5.2 mm 5.3 mm
Conductor cross-section		0.25 mm^2	0.34 mm^2 0.25 mm^2 + 0.34 mm^2 (5 pin, shielded)
Bending radius		10 x jacket diameter	10 x jacket diameter 15 x jacket diameter (5 pin, PUR shielded)
Temperature range		-25 ... +80°C (PUR) -5 ... +70°C (PVC)	-25 ... +80°C (PUR) -25 ... +75°C (PUR, shielded) -5 ... +70°C (PVC)
Materials			
Contact		CuZn39Pb3F50 (male) CuNi2Si HV160U (female)	CuZn39Pb3F50 (male) CuNi2Si HV160U (female)
Finishing, mating zone		gold plated	gold plated
Screw material		Zinc die casting	Zinc die casting
Screw plating		4-6 µm Ni	4-6 µm Ni
Electrical data			
Operating voltage	IEC 60664	The permissible operating voltages depend on the customer application and on the applicable or specified safety requirements. Insulation coordination according to IEC 60664-1 has to be regarded for the complete electrical device. Therefore, the maximum creepage and clearance distances of the mated connectors are specified for consideration as a part of the whole current path. In practice, reductions in creepage or clearance distances may occur due to the conductive pattern of the printed board or the wiring used, and have to be taken into account separately. As a result the creepage and clearance distances for the application may be reduced compared to those of the connector.	
Current rating per contact	IEC 61076-2-101	max. 4 A	max. 4 A
Dielectric strength	IEC 61076-2-101	max. 1.5 kV (depends on type)	max. 2.5 kV (depends on type)
Approvals			
Protection class	IEC 60529	IP67	IP67

Electrical and Mechanical Characteristics
Quick Termination

	Standard	M8 Quick Termination	M12 Quick Termination
Type		male, female	male, female
Technical specification			
Number of Pins		3, 4	4
Coding		A	A
Connection		Screw locking M8x1 (max. tightening force 0.4 Nm)	Screw locking M12x1 (max. tightening force 0.6 Nm)
Temperature range		-25 ... +85°C	-25 ... +85°C
Cable termination			
Termination		Quick termination (IDC)	Quick termination (IDC)
Cable jacket diameter		3.2 - 5.4 mm	4.0 - 5.1 mm
Wire diameter		1.0 - 1.7 mm	1.2 - 1.6 mm
Conductor cross-section		0.14 - 0.34 mm^2	0.14 - 0.34 mm^2
Diameter of individual strands		min. 0.1 mm	min. 0.1 mm
Reconnection (same cross-section)		10	10
Materials			
Contact		CuZn39Pb3F50 (male) CuNi2Si HV160U (female)	CuZn39Pb3F50 (male) CuNi2Si HV160U (female)
Finishing, mating zone		gold plated	gold plated
Electrical data			
Operating voltage	IEC 60664	The permissible operating voltages depend on the customer application and on the applicable or specified safety requirements. Insulation coordination according to IEC 60664-1 has to be regarded for the complete electrical device. Therefore, the maximum creepage and clearance distances of the mated connectors are specified for consideration as a part of the whole current path. In practice, reductions in creepage or clearance distances may occur due to the conductive pattern of the printed board or the wiring used, and have to be taken into account separately. As a result the creepage and clearance distances for the application may be reduced compared to those of the connector.	
Current rating per contact	IEC 61-076-2-101	max. 4 A	max. 4 A
Dielectric strength	IEC 61-076-2-101	0.8 kV	0.8 kV
Approvals			
Protection class	IEC 60529	IP67	IP67

	Adapter	T-Coupler	Panel Feed-Through
Type	male, female	M12 male - 2 x M12 female, M12 male - 2 x M8 female	M12 female - M12 male
Technical specification			
Number of Pins	3, 4	5/4, 4/3	5
Coding	A	A	A, B
Connection	Screw locking M8x1 (0.4 Nm) M12x1 (0.6 Nm)	Screw locking M8x1 (0.4 Nm) M12x1 (0.6 Nm)	Screw locking M12x1 (0.6 Nm)
Temperature range	-25 ... +85°C	-25 ... +85°C	-25 ... +90°C
Materials			
Contact	CuZn39Pb3F50 (male) CuNi2Si HV160U (female)	CuZn39Pb3F50 (male) CuNi2Si HV160U (female)	CuZn39Pb3F50 (male) CuNi2Si HV160U (female)
Finishing, mating zone	gold plated	gold plated	gold plated
Electrical data			
Operating voltage	The permissible operating voltages depend on the customer application and on the applicable or specified safety requirements. Insulation coordination according to IEC 60664-1 has to be regarded for the complete electrical device. Therefore, the maximum creepage and clearance distances of the mated connectors are specified for consideration as a part of the whole current path. In practice, reductions in creepage or clearance distances may occur due to the conductive pattern of the printed board or the wiring used, and have to be taken into account separately. As a result the creepage and clearance distances for the application may be reduced compared to those of the connector.		
Current rating per contact	max. 4 A	max. 4 A	max. 4 A
Dielectric strength	0.8 kV	2.5 kV (M12 - 2 x M12) 0.8 kV (M12 - 2 x M8)	0.8 kV
Approvals			
Protection class	IP67	IP67	IP67

Tape and reel packaging for female and male connectors M8

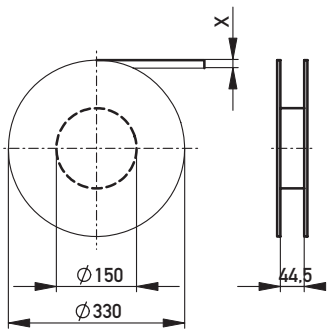

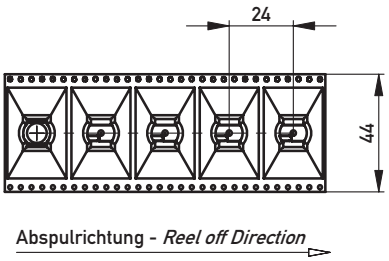

	X
M8 female	18.0
M8 male	21.0

Tape and reel packaging for female and male connectors M12

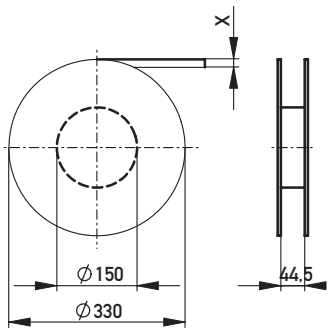

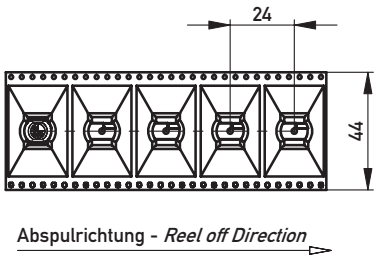

	X
M12 female	21,3
M12 male	23,8

Tray packaging for male connectors M12

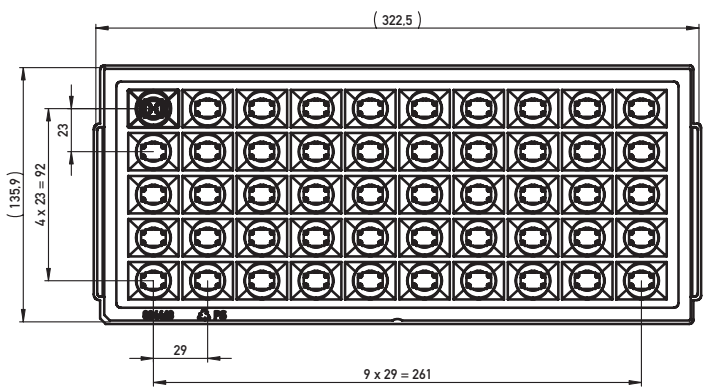



M8 connectors are well known for the connection of small form factor sensor/actuator devices like proximity sensors, photoelectric barriers, cylinder switches, vacuum valves or micro switches. For such miniature devices it is essential to have space-saving components for reaching compact designs. The M8 products from ERNI support this idea and meet the requirements to a high degree. The female connectors can be ideally used for integrative designs where the M8 locking thread is an integrated part of the housing. Female connectors are mostly used as an input connection for sensor signals.

Dimensional Drawings

3 Pin Version

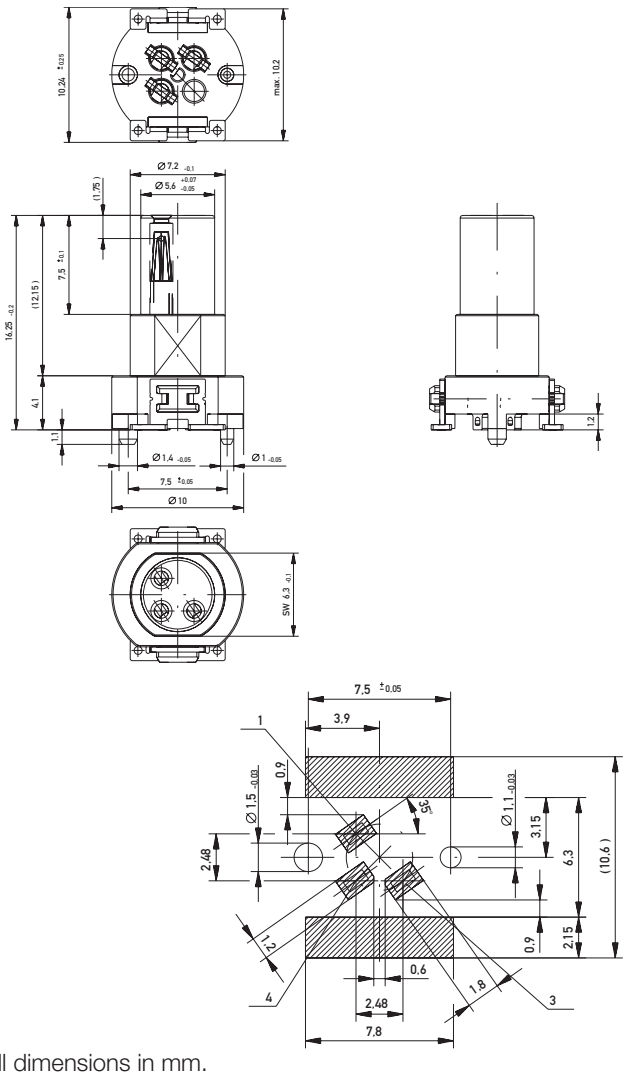

4 Pin Version

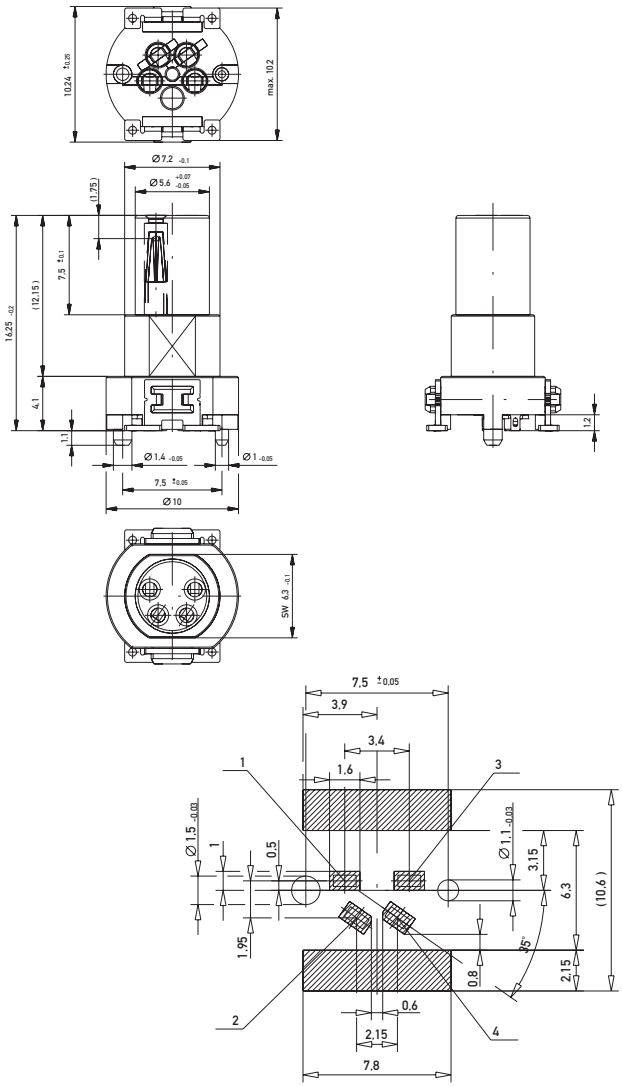

All dimensions in mm.

Ordering Information

Configuration	No. of Pins	Assembly Height	Coding	Termination	Packaging	Part Number
	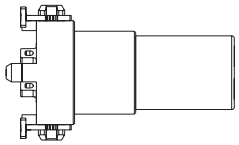				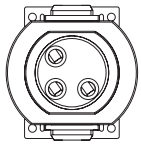	
Female M8	3	9/13 mm	A	SMT	Tape and reel/100 pcs	**224150**
Female M8	3	9/13 mm	A	SMT	Bulk/100 pcs	**234233**
	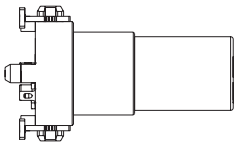				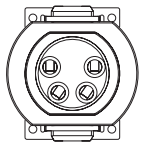	
Female M8	4	9/13 mm	A	SMT	Tape and reel/100 pcs	**224151**
Female M8	4	9/13 mm	A	SMT	Bulk/100 pcs	**234234**

Accessories for M8 Female Connectors

Configuration	Assembly Height	Packaging	Part Number
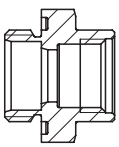			
Metal shell for M8 female connectors	9 mm	Bulk	**254154**
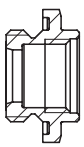			
Metal shell for M8 female connectors	13 mm	Bulk	**284067**
O-ring for M8 connectors, 10x1	_	Bulk/100 pcs	**834898**
O-ring for M8 connectors, 5x0.8	_	Bulk/100 pcs	**835283**



Consistent to M8 female versions, ERNI M8 male connectors succeed with the same concept: capability for fully-automated SMT soldering processes. The male version uses machined gold plated contacts ensuring at least 100 mechanical operations. Solid retention clips absorb mating forces and make the surface mounted device stress-resistant.
Male connectors are reliable for power supply interfaces in I/O boxes. Despite its small design the connector allows a current rating of 5.7 A at 20 °C (all pins fully loaded). It is also being used as bus connector where M12 B-coded types would need to much space.

Dimensional Drawings

4 Pin Version

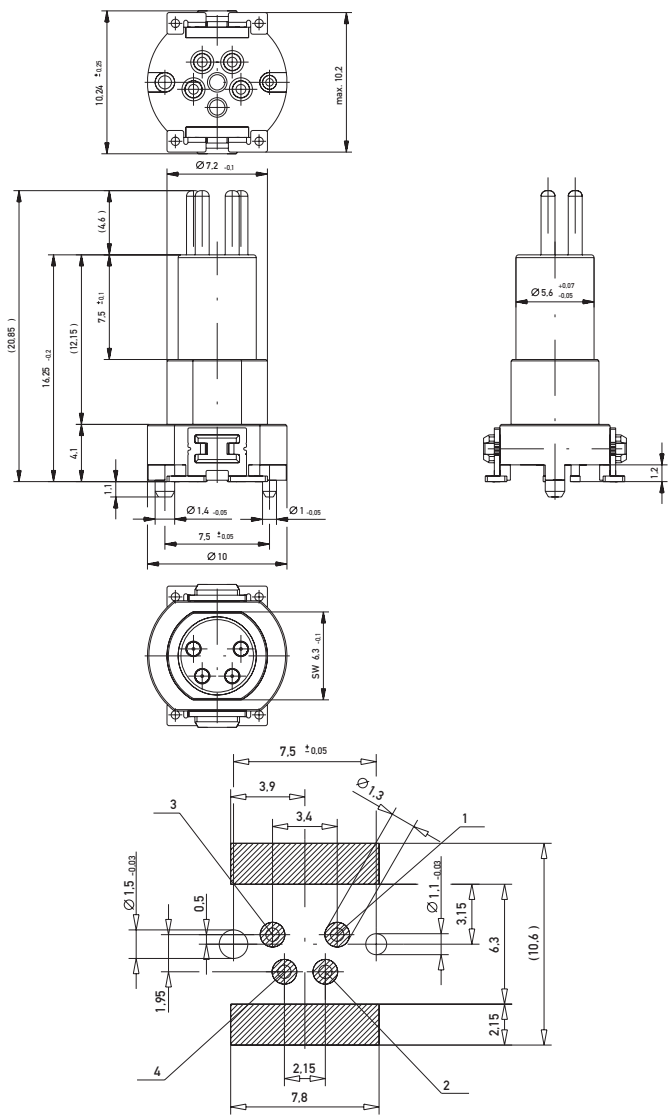

All dimensions in mm.

Ordering Information

Configuration	No. of Pins	Assembly Height	Coding	Termination	Packaging	Part Number
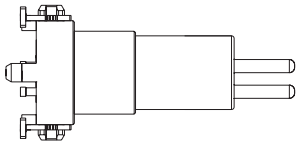					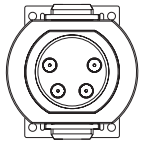	
Male M8	4	9/13 mm	A	SMT	Tape and reel/80 pcs	**224152**
Male M8	4	9/13 mm	A	SMT	Bulk/100 pcs	**234235**

Accessories for M8 Male Connectors

Configuration	Assembly Height	Packaging	Part Number
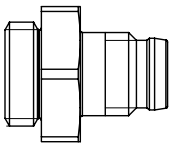		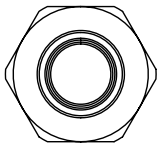	
Metal shell for M8 male connectors	9 mm	Bulk	**284409**
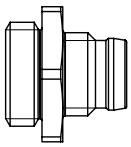		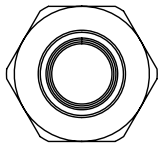	
Metal shell for M8 male connectors	13 mm	Bulk	**284074**
O-ring for M8 connectors, 10x1	–	Bulk/100 pcs	**834898**



ERNI's M8 cable solutions fit to the according PCB counterpart and the threaded panel flange offered in addition.
The importance of this comprehensive solution offered by one supplier is that individual components are tested altogether. Even though there is a standard (IEC) applicable, small differences of individual components may cause problems, e.g. not achieving IP67. ERNI's solution is qualified and tested altogether and meets all IEC requirements. M8 cable assemblies are over-moulded and offered either as interconnection of two circular connectors or as a cord set having an open end of line.
ERNI's portfolio covers further criteria:

- no. of contacts:
  3, 4
- LED: 2 LEDs optional
- cable: PVC / PUR (UL/CSA)
- standard cable length:
  - interconnection: 0.3, 0.6, 1.0, 1.5, 2.0 m
  - pigtail: 1.5, 3.0, 5.0, 7.5, 10.0 m

Dimensional Drawings

Female straight - Pigtail

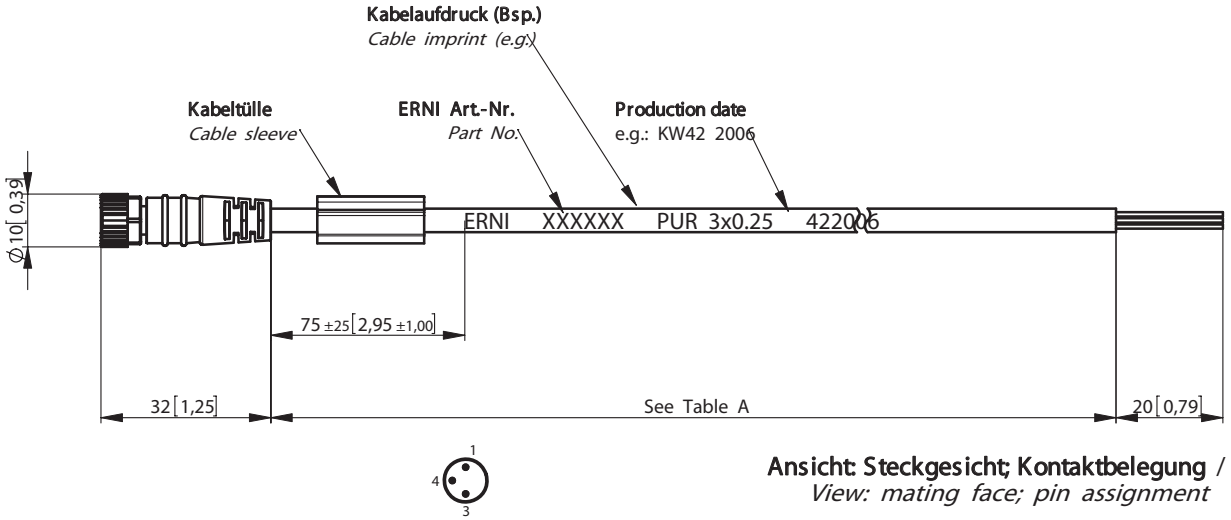

Ansicht: Steckgesicht; Kontaktbelegung /
View: mating face; pin assignment

Female angled - Pigtail

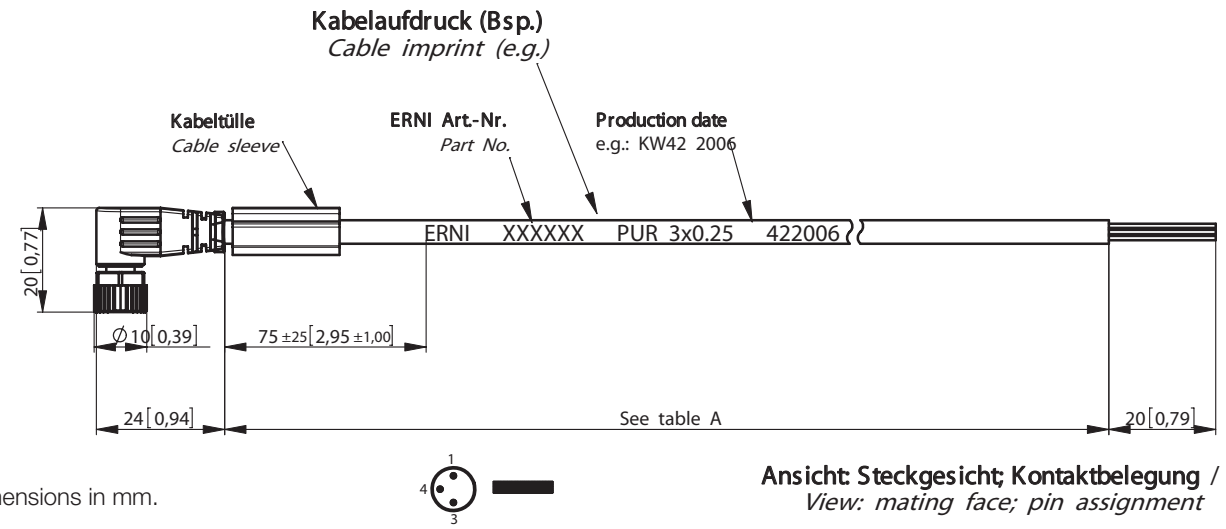

Ansicht: Steckgesicht; Kontaktbelegung /
View: mating face; pin assignment

All dimensions in mm.

Female angled, with LED - Pigtail

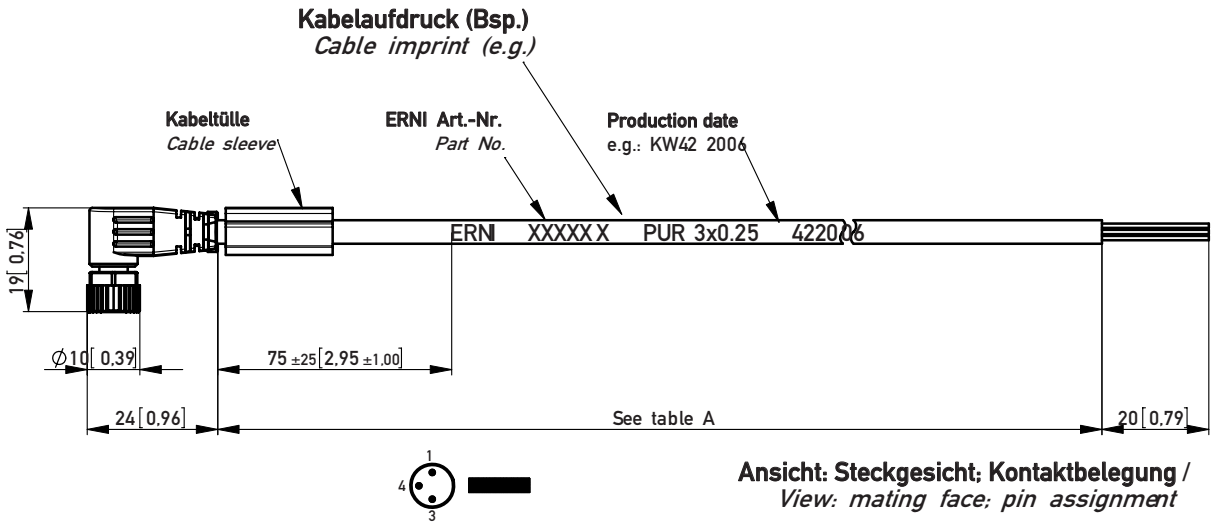

Male straight - Pigtail

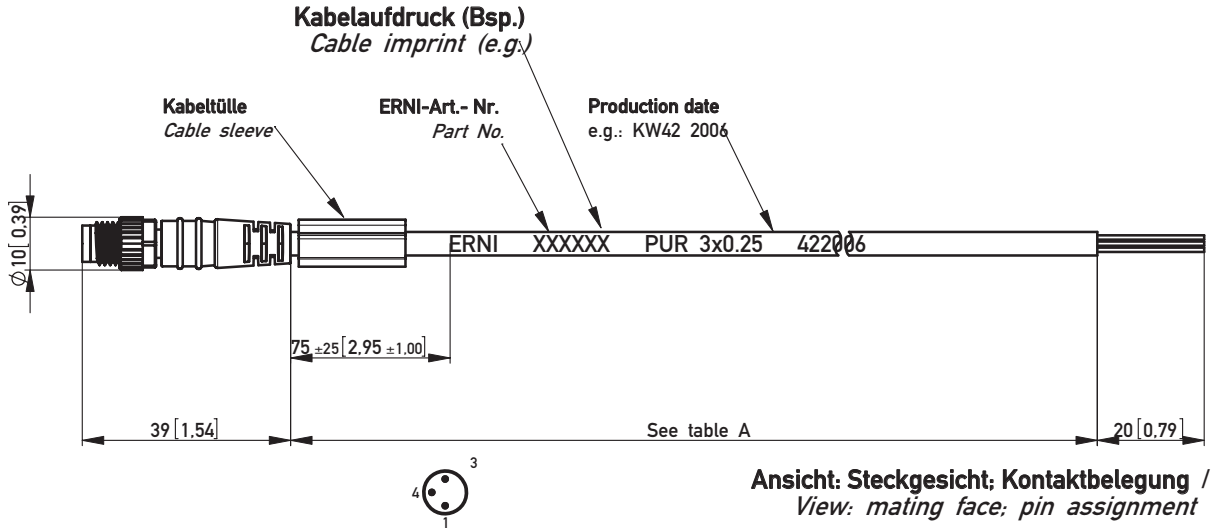

Male straight - Female straight

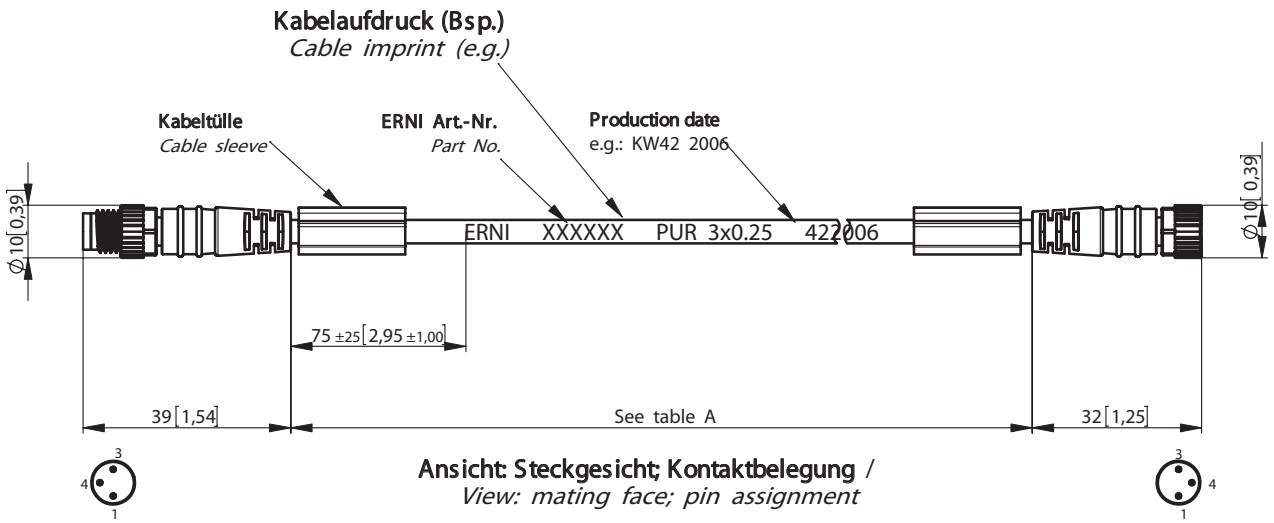

Male straight - Female angled

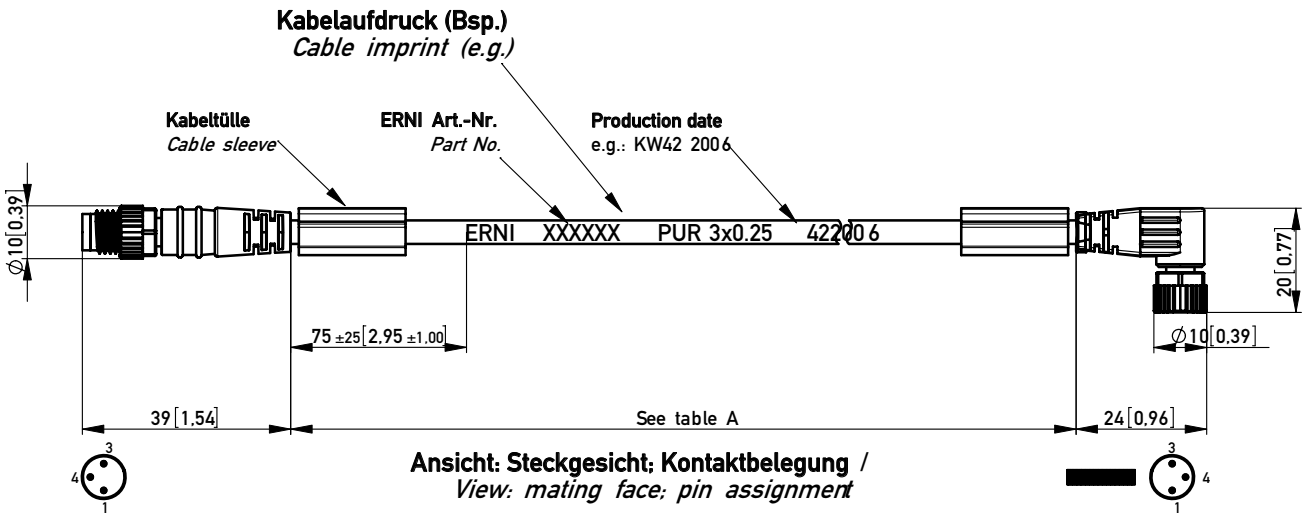

Ordering Information

Connector1	Connector2	No. of Pins	Length	Coding	Cable Type	Part Number
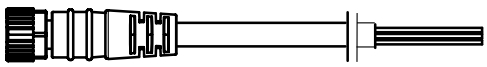						
Female straight	None	3	3.0 m	A	PVC	**223764**
Female straight	None	3	3.0 m	A	PUR	**223765**
Female straight	None	4	1.5 m	A	PVC	**223933**
Female straight	None	4	3.0 m	A	PVC	**223767**
Female straight	None	4	3.0 m	A	PUR	**223769**
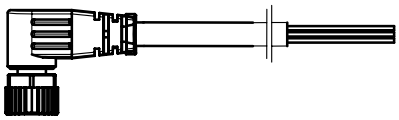						
Female angled	None	3	1.5 m	A	PUR	**223711**
Female angled	None	3	3.0 m	A	PVC	**223770**
Female angled	None	4	3.0 m	A	PVC	**223771**
Female angled	None	4	3.0 m	A	PUR	**223772**
Female angled, with LED	None	3	3.0 m	A	PVC	**223766**
Female angled, with LED	None	3	3.0 m	A	PUR	**223768**
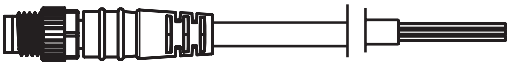						
Male straight	None	3	1.5 m	A	PUR	**223710**
Male straight	None	4	3.0 m	A	PUR	**223762**
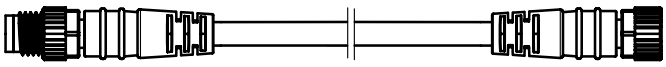						
Male straight	Female straight	3	1.0 m	A	PVC	**223773**
Male straight	Female straight	3	1.0 m	A	PUR	**223774**
Male straight	Female straight	4	1.0 m	A	PVC	**223776**
Male straight	Female straight	4	1.0 m	A	PUR	**223777**

Ordering Information

Connector1	Connector2	No. of Pins	Length	Coding	Cable Type	Part Number
		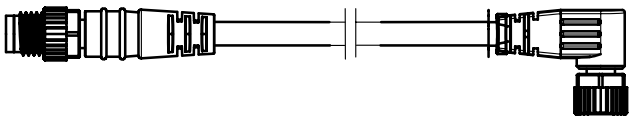				
Male straight	Female angled	3	1.0 m	A	PVC	**223775**
Male straight	Female angled	3	1.0 m	A	PUR	**223778**
Male straight	Female angled	4	1.0 m	A	PUR	**223763**
Male straight	Female angled	4	1.0 m	A	PVC	**223779**
Male straight	Female angled, with LED	3	0.3 m	A	PUR	**223712**
Male straight	Female angled, with LED	3	1.0 m	A	PVC	**223780**



When installing sensor/actuator devices sometimes pre-assembled cables can cause difficulties or even prevent from successful installation because of cables laying in cable ducts or going through narrow components and small gaps. This would increase the wiring time and raise maintenance cost. ERNI's field-wireable quick termination connectors are an adequate and efficient solution ensuring highest flexibility for cabling of sensor/actuator peripherals. Easy termination of standard cables is guaranteed by tool-less IDC technology.
Further features:

- up to 10 times reconnectable
- integrated strain-relief
- vibration-proof feature
- suitable for cable diameter 3.2 - 5.4 mm

Dimensional Drawings

3 Pin Female

Buchse M8 */M8 female*
3-polig */3 pin*

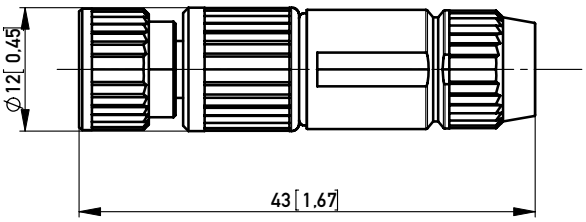

Quick termination technique (IDC)



Ansicht: Steckgesicht; Kontaktbelegung /
View: mating face; pin assignment

3 Pin Male

Buchse M8 */M8 female*
3-polig */3 pin*

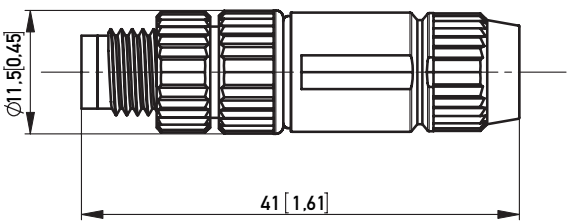

Quick termination technique (IDC)



Ansicht: Steckgesicht; Kontaktbelegung /
View: mating face; pin assignment

All dimensions in mm.

4 Pin Female

Buchse M8 */M8 female*
4-polig */4 pin*

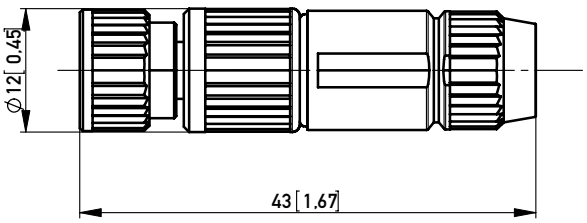

Quick termination technique (IDC)



Ansicht: Steckgesicht; Kontaktbelegung /
View: mating face; pin assignment

4 Pin Male

Stecker M8 */M8 male*
4-polig */4 pin*

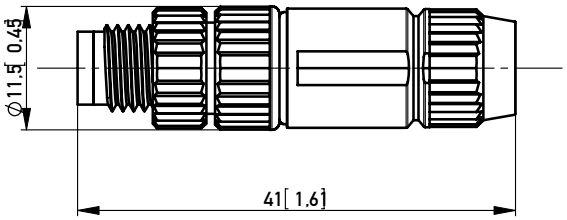

Quick termination technique (IDC)



Ansicht: Steckgesicht; Kontaktbelegung /
View: mating face; pin assignment

Ordering Information

Configuration	No. of Pins	Termination	Coding	Part Number
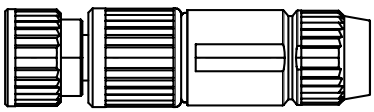				
Female M8	3	IDC	A Coding	**254760**
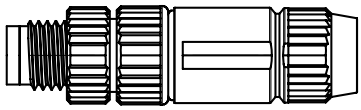				
Male M8	3	IDC	A Coding	**254758**
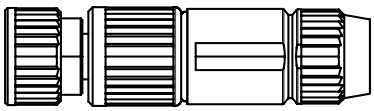				
Female M8	4	IDC	A Coding	**254764**
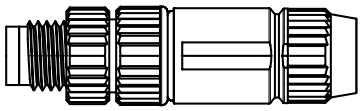				
Male M8	4	IDC	A Coding	**254762**

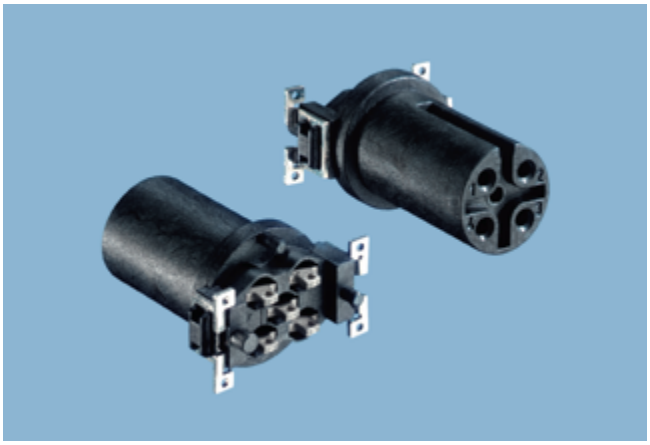

ERNI introduced the first M12 SMT connector in 2003. The ability for surface mount assembly processes contributes to the design-to-cost philosophy and leads to significant cost savings in general applications.
The modular connector system comprises of not only the connector itself but also considers various threaded metal flanges and O-ring seals. A solution that allows designer to flexibly create different PCB to front panel distances.
Moreover it protects from dust and water immersion according to IP67. Several codings compliant to IEC 61076-2-101 are supported.

Dimensional Drawings

4 Pin Version, A Coding

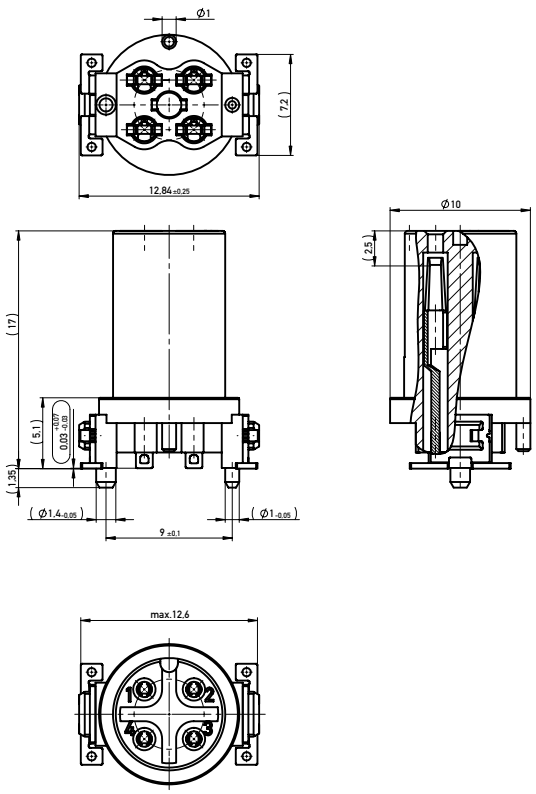

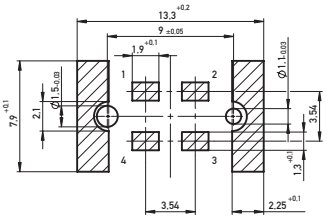

All dimensions in mm.

5 Pin Version, A Coding

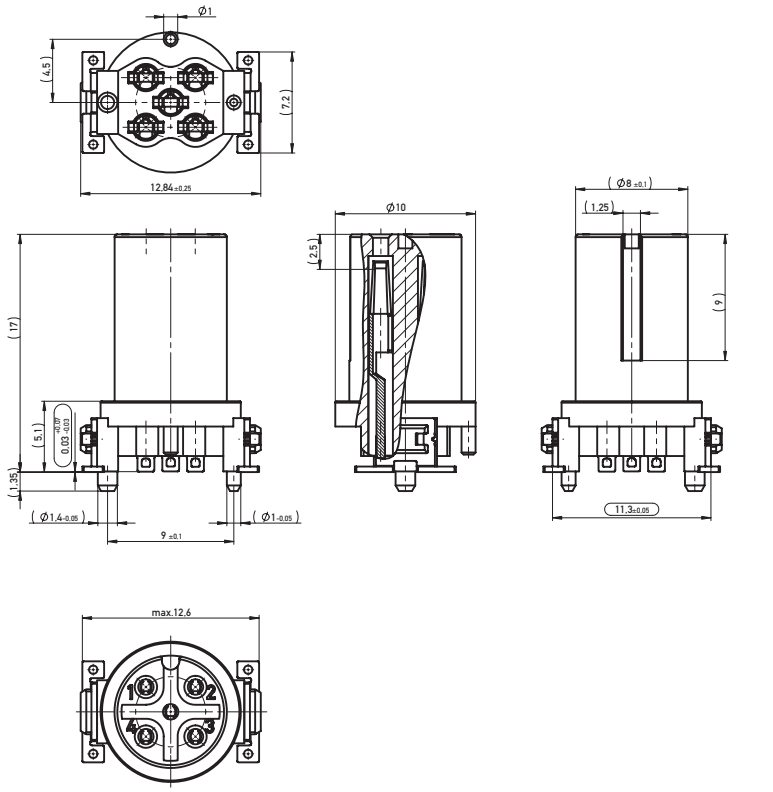

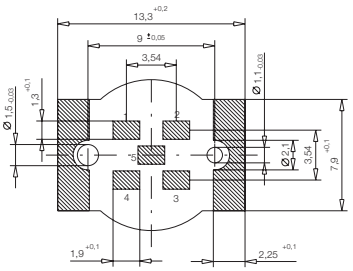

Layout for connectors with machined contacts

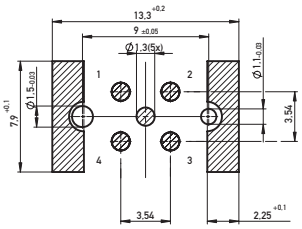

8 Pin Version, A Coding

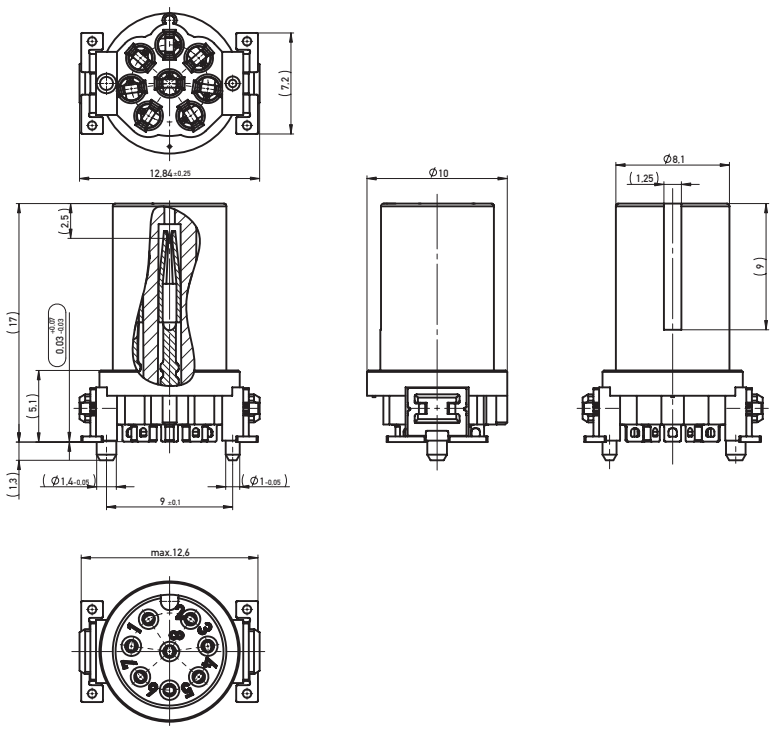

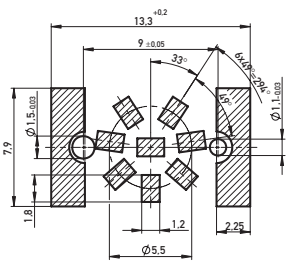

5 Pin Version, B Coding

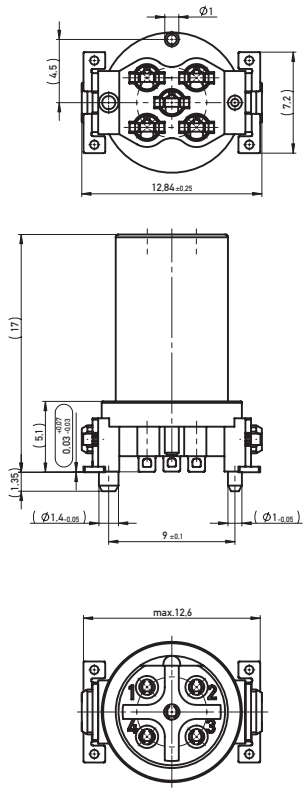

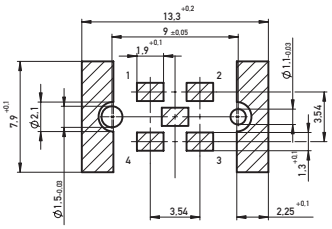

Layout for connectors with machined contacts

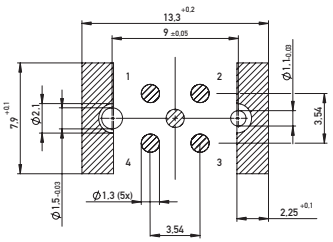

4 Pin Version, D Coding

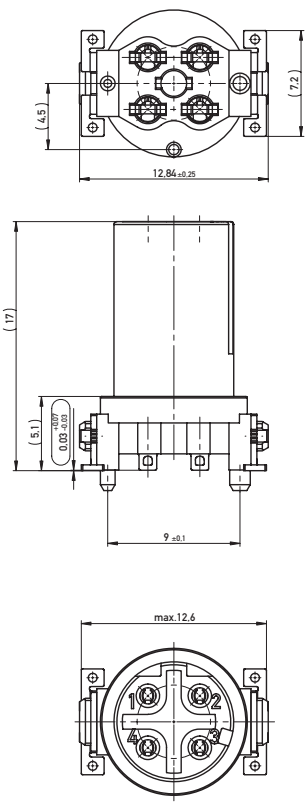

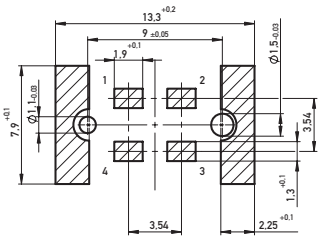

Layout for connectors with machined contacts

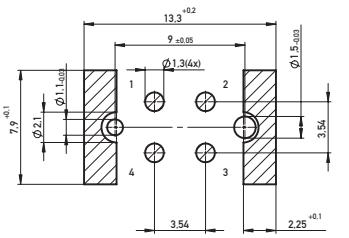

Ordering Information

Configuration	No. of Pins	Assembly Height	Coding	Termination	Packaging	Part Number
	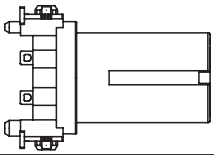				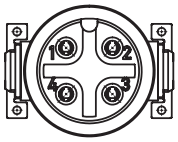	
Female M12	4	9/13 mm	A	SMT	Bulk/100 pcs	**284322**
	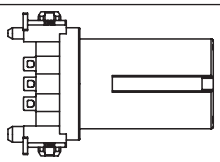					
Female M12	5	9/13 mm	A	SMT	Tape and reel/100 pcs	**224064**
Female M12	5	9/13 mm	A	SMT	Bulk/100 pcs	**194781**
Female M12, machined contacts	5	9/13 mm	A	SMT	Tape and reel/100 pcs	**354702**
	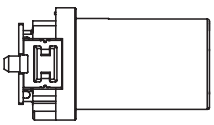				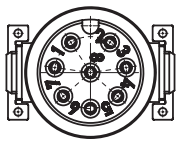	
Female M12	8	9/13 mm	A	SMT	Tape and reel/100 pcs	**354131**
Female M12	8	9/13 mm	A	SMT	Bulk/100 pcs	**254310**
	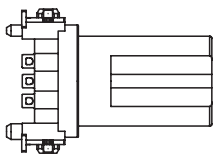					
Female M12	5	9/13 mm	B	SMT	Tape and reel/100 pcs	**254206**
Female M12	5	9/13 mm	B	SMT	Bulk/100 pcs	**254205**
Female M12, machined contacts	5	9/13 mm	B	SMT	Tape and reel/100 pcs	**384891**

Ordering Information

Configuration	No. of Pins	Assembly Height	Coding	Termination	Packaging	Part Number
	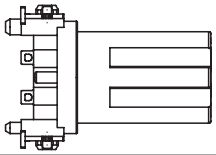				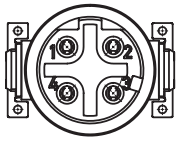	
Female M12	4	9/13 mm	D	SMT	Tape and reel/100 pcs	**234041**
Female M12	4	9/13 mm	D	SMT	Bulk/100 pcs	**234040**
Female M12, machined contacts	4	9/13 mm	D	SMT	Tape and reel/100 pcs	**364175**

Accessories for M12 Female Connectors

Configuration	Assembly Height	Packaging	Part Number
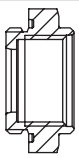		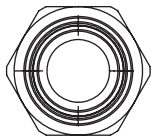	
Metal shell for M12 female connectors	9 mm	Bulk	**374729**
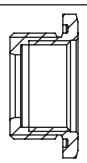		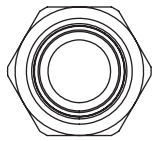	
Metal shell for M12 female connectors	13 mm	Bulk	**374728**
		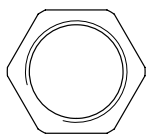	
Counternut M14x1	–	Bulk	**354003**

Configuration	Material	Packaging	Part Number
O-ring for M12 connectors, 14x1	NBR	Bulk/100 pcs	**834899**
O-ring for M12 connectors, 7x1	Viton	Bulk/100 pcs	**835284**
Protective cap, female connectors, M12x1, IP67	PE-HD	Bulk	**374343**



The M12 SMT male connectors complete the product range of M12 PCB connectors from ERNI.
A-coded versions are successfully used for power supply on sensor/actuator distribution boxes or on Ethernet switches.
The A-coded connectors are also standard for low voltage switching devices according to IEC 60947-5-2.
The modular connector system includes male connectors of two different heights and various threaded metal flanges that allow to realize different distances between PCB and front panel. O-ring seals ensure protection according to IP67.

Dimensional Drawings

4 Pin Version, Style 1, A Coding, Assembly Height 9 mm, Additional Sealing Option

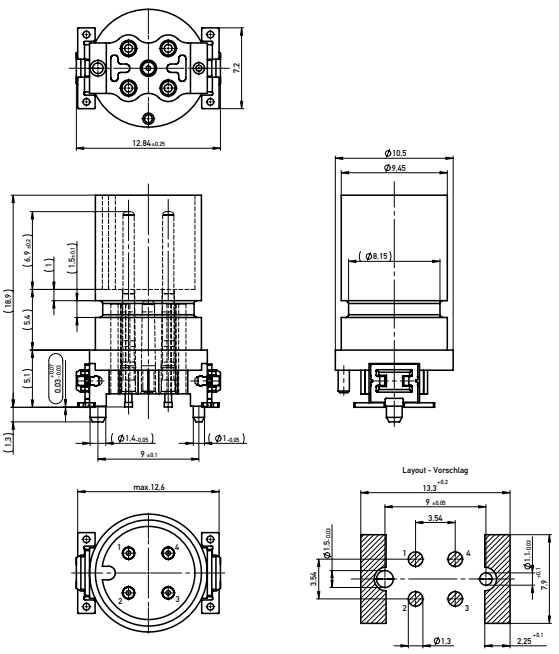

4 Pin Version, Style 2, A Coding, Assembly Height 13 mm

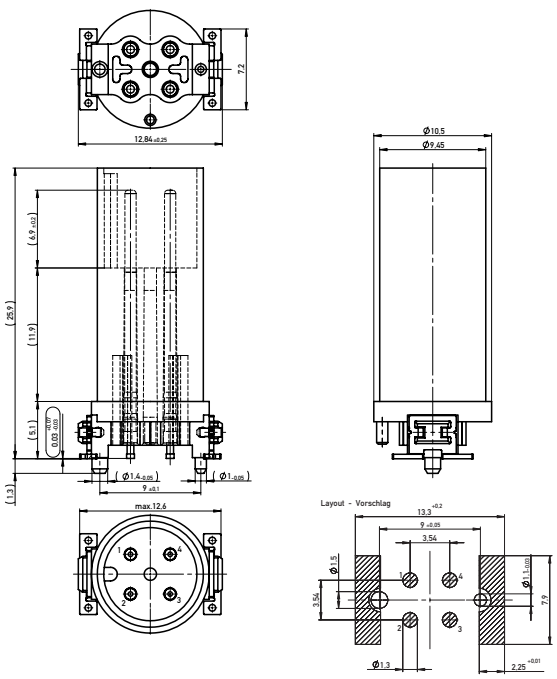

All dimensions in mm.

5 Pin Version, Style 1, A Coding, Assembly Height 9 mm, Additional Sealing Option

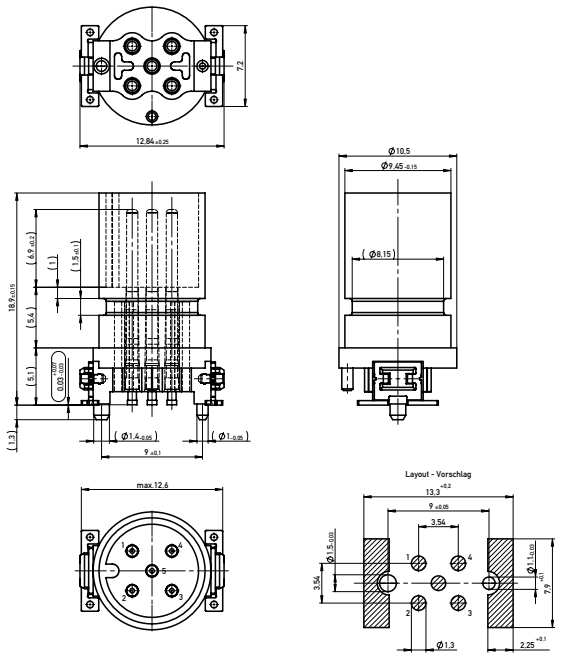

5 Pin Version, Style 2, A Coding, Assembly Height 13 mm

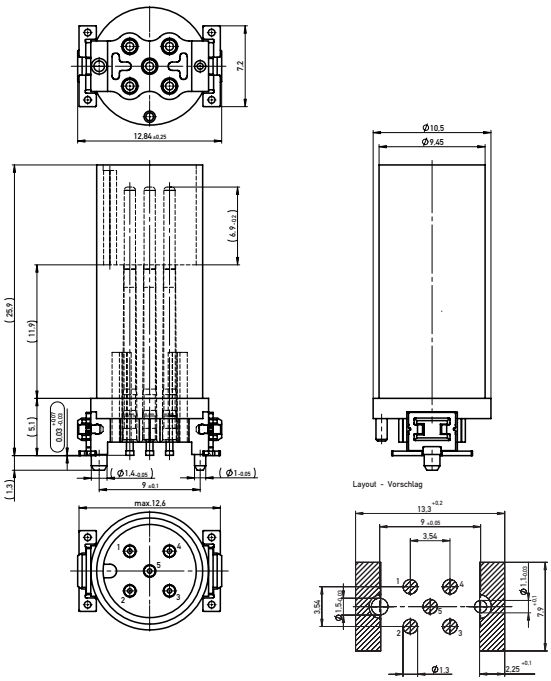

5 Pin Version, Style 1, A Coding, Assembly Height 13 mm, Additional Sealing Option

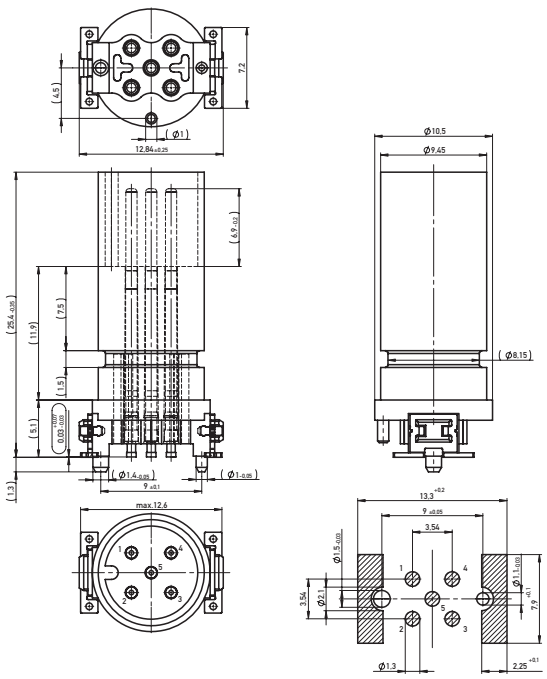

8 Pin Version, Style 1, A Coding, Assembly Height 9 mm

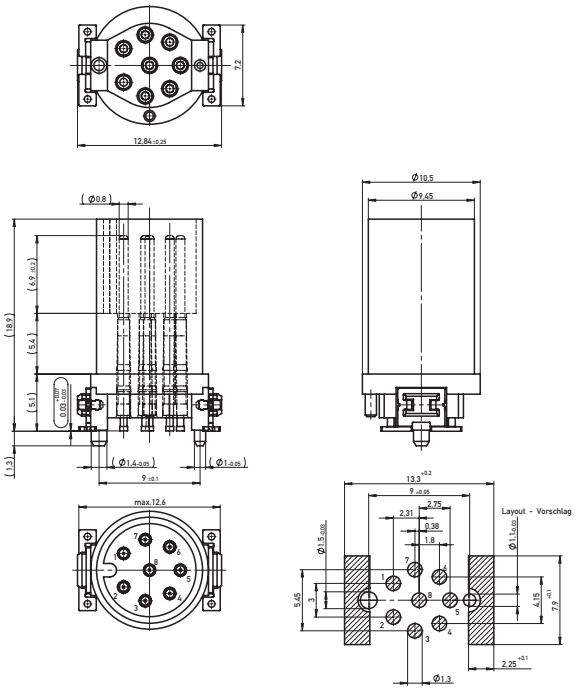

5 Pin Version, Style 1, B Coding, Assembly Height 9 mm

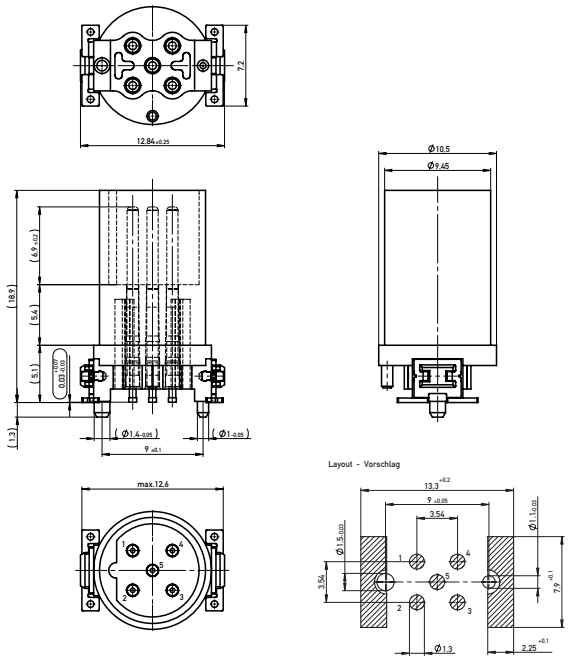

5 Pin Version, Style 1, B Coding, Assembly Height 13 mm, Additional Sealing Option

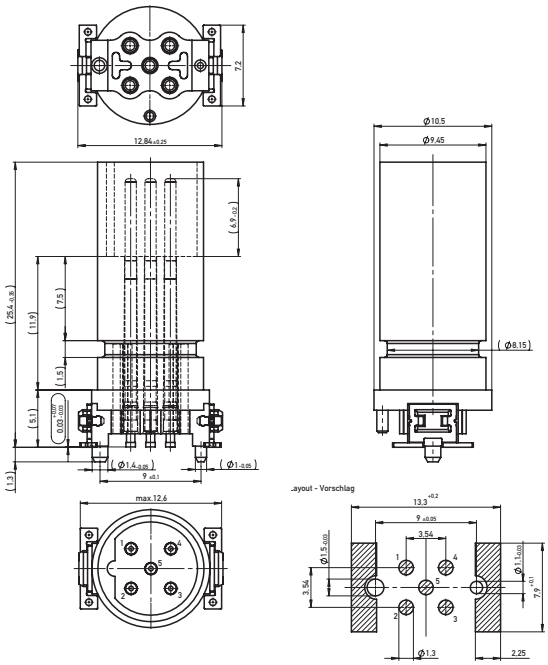

4 Pin Version, Style 2, D Coding, Assembly Height 13 mm

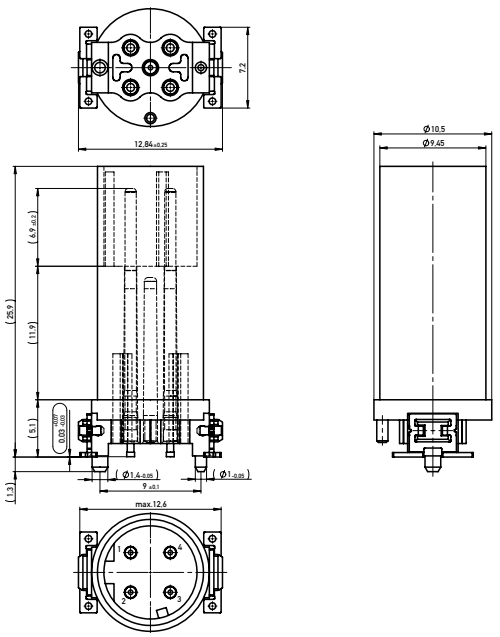

Ordering Information

Configuration	No. of Pins	Assembly Height	Coding	Termination	Packaging	Part Number
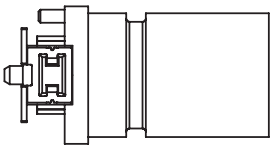					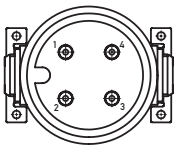	
Male M12, Style 1	4	9 mm	A	SMT	Tape and reel/75 pcs	**284809**
Male M12, Style 1	4	9 mm	A	SMT	Bulk/100 pcs	**284784**
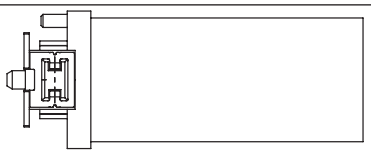					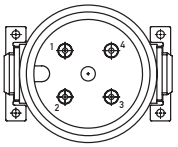	
Male M12, Style 2	4	13 mm	A	SMT	Bulk/100 pcs	**254188**
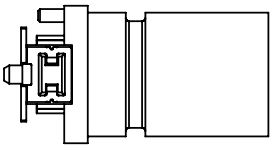					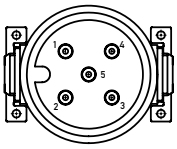	
Male M12, Style 1	5	9 mm	A	SMT	Tape and reel/75 pcs	**284740**
Male M12, Style 1	5	9 mm	A	SMT	Bulk/100 pcs	**354132**
					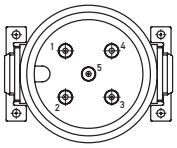	
Male M12, Style 2	5	13 mm	A	SMT	Bulk/100 pcs	**244790**
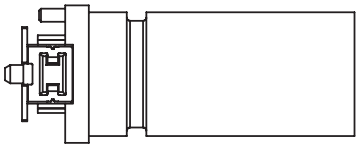					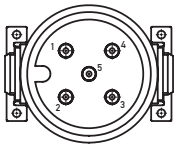	
Male M12, Style 1	5	13 mm	A	SMT	Bulk/100 pcs	**364767**

Ordering Information

Configuration	No. of Pins	Assembly Height	Coding	Termination	Packaging	Part Number
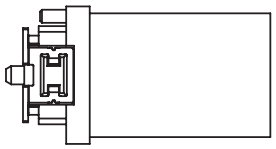					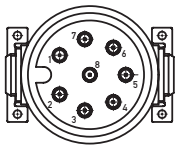	
Male M12, Style 1	8	9 mm	A	SMT	Tape and reel/75 pcs	**284810**
Male M12, Style 1	8	9 mm	A	SMT	Bulk/100 pcs	**254317**
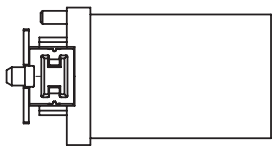					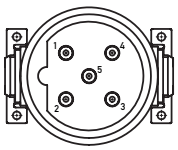	
Male M12, Style 1	5	9 mm	B	SMT	Tape and reel/75 pcs	**354130**
Male M12, Style 1	5	9 mm	B	SMT	Bulk/100 pcs	**254319**
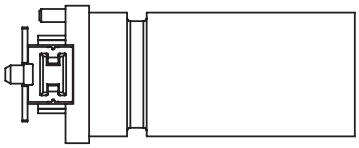					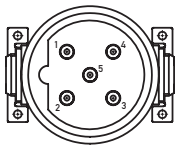	
Male M12, Style 1	5	13 mm	B	SMT	Bulk/100 pcs	**374947**
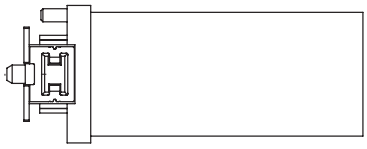					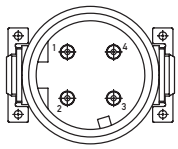	
Male M12, Style 2	4	13 mm	D	SMT	Bulk/100 pcs	**244798**

Ordering Information

Accessories for M12 Male Connectors

Configuration	Assembly Height	Packaging	Part Number
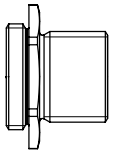		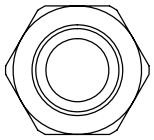	
Metal shell for M12 male connectors, Style 1	9 mm	Bulk	**254737**
Metal shell for M12 male connectors, Style 2	9 mm	Bulk	**254739**
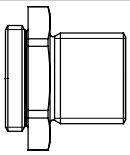		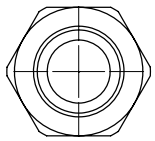	
Metal shell for M12 male connectors, Style 1	13 mm	Bulk	**284377**
Metal shell for M12 male connectors, Style 2	13 mm	Bulk	**284363**
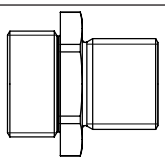		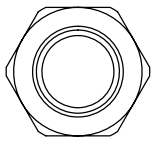	
Metal shell for M12 male connectors, Style 2, for counternut	13 mm	Bulk	**354217**
		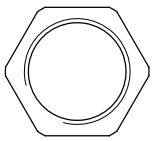	
Counternut M14x1	–	Bulk	**354003**

Configuration	Material	Packaging	Part Number
O-ring for M12 connectors, 14x1	NBR	Bulk/100 pcs	**834899**
Protective Cap, Male Connector, M12x1, incl. O-ring, IP67	PE-HD	Bulk	**374342**

Style 1 and Style 2 explained on page 5.



This M12 cThis M12 connector version is suitable for direct integration in a plastic housing. The connector insert is soldered to the PCB via SMT or THR process. It has no coding and no bushing. These are part of the customer‘s housing. By omitting the bushing, the M12 thread can be designed to be much more robust at the housing with a correspondingly greater wall thickness. The insert can be applied universally thanks to the separation of the coding from the connector. The customer can select the A, B or D coding, depending on the number of pins. The version is suitable for an installation height of 9 mm.
In addition, the connector insert can be sealed at the housing by means of an O-ring and is thereby water-proof, even when unconnected.

Dimensional Drawings

4 Pin Version, Assembly Height 9 mm, Additional Sealing Option

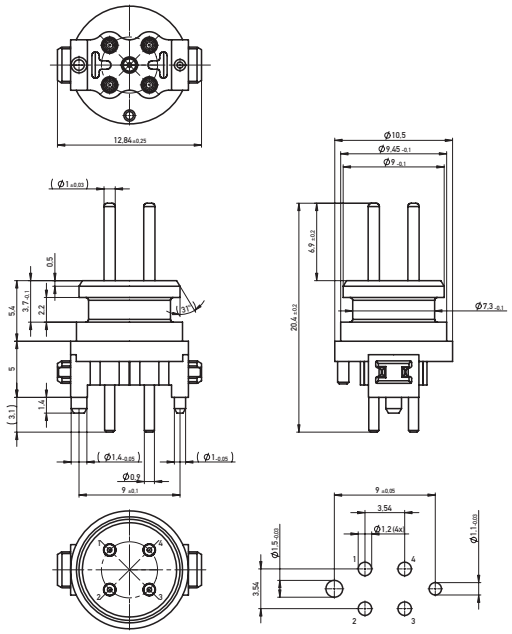

5 Pin Version, Assembly Height 9 mm, Additional Sealing Option

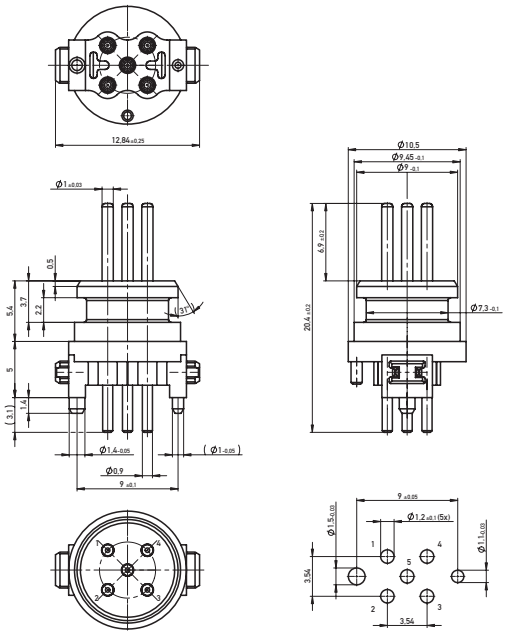

8 Pin Version, Assembly Height 9 mm, Additional Sealing Option

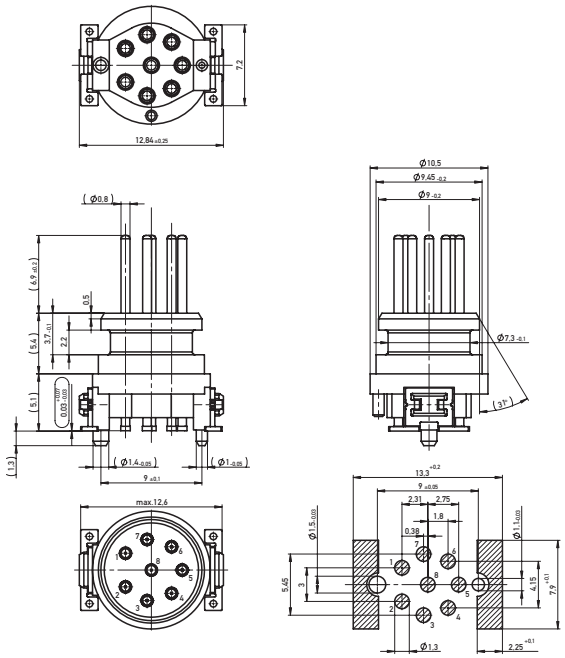

Ordering Information

Configuration	No. of Pins	Assembly Height	Coding	Termination	Packaging	Part Number
	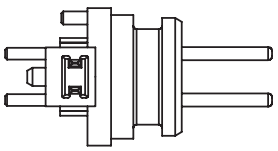				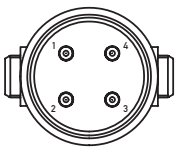	
Male M12	4	9 mm	–	THR	Tray/50 pcs	**364781**
	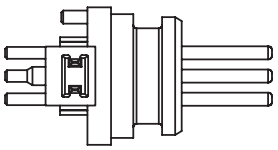				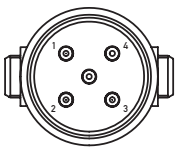	
Male M12	5	9 mm	–	THR	Tray/50 pcs	**364779**
	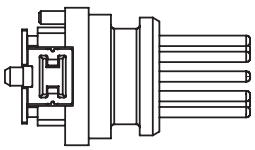				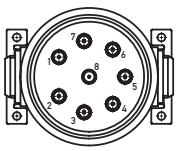	
Male M12	8	9 mm	–	SMT	Tray/50 pcs	**364777**

Accessories for M12 Connectors for Direct Integration

Configuration	Material	Packaging	Part Number
O-ring for M12 connectors, 7x1.5	NBR	Bulk/100 pcs	**835243**



Pre-assembled cables are one of the effective possibilities to save time and money. There is no need to consider the correct pin assignment. Coding latches ensure secure mating supported by an integrated vibration-proof feature.
Over-moulded connectors guarantee a watertight solution (IP67).
M12 cable assemblies are either offered as an interconnection of two circular connectors or as a cord set having an open end of line (pigtail). Especially in harsh environments and for demanding applications the PUR cable assembly is the leading edge. Standardized coding is conform with requirements of different applications and bus technologies.
ERNI's portfolio covers further criteria:

- no. of contacts: 4, 5, 8
- LED: 3 LEDs optional
- cable: PVC / PUR (UL/CSA)
- standard cable length:
  - interconnection: 0.3, 0.6, 1.0, 1.5, 2.0 m
  - pigtail: 1.5, 3.0, 5.0, 7.5, 10.0 m

Dimensional Drawings

Female straight - Pigtail

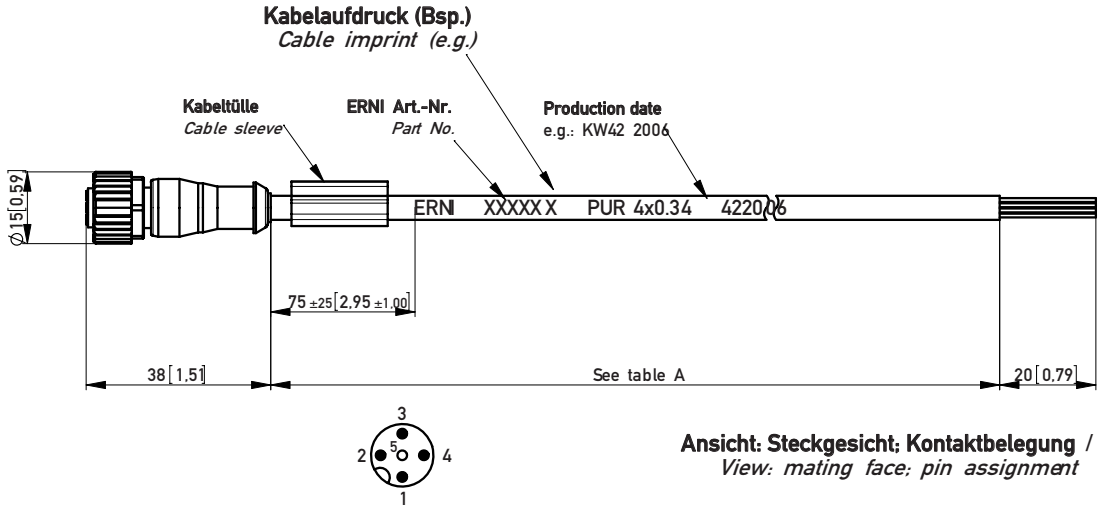

Female angled - Pigtail

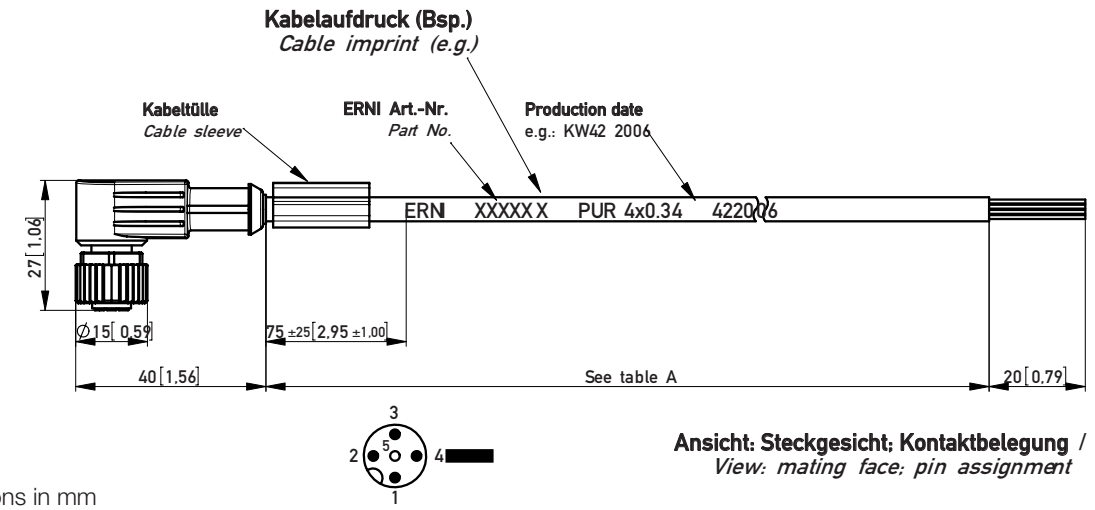

All Dimensions in mm

Female angled, with LED - Pigtail

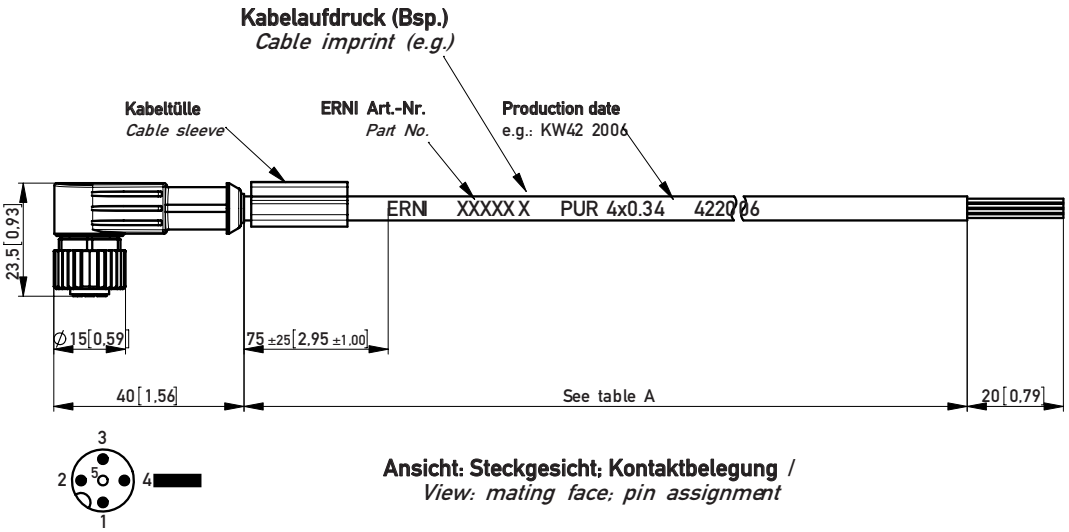

Ansicht: Steckgesicht; Kontaktbelegung /
View: mating face; pin assignment

Male straight - Pigtail

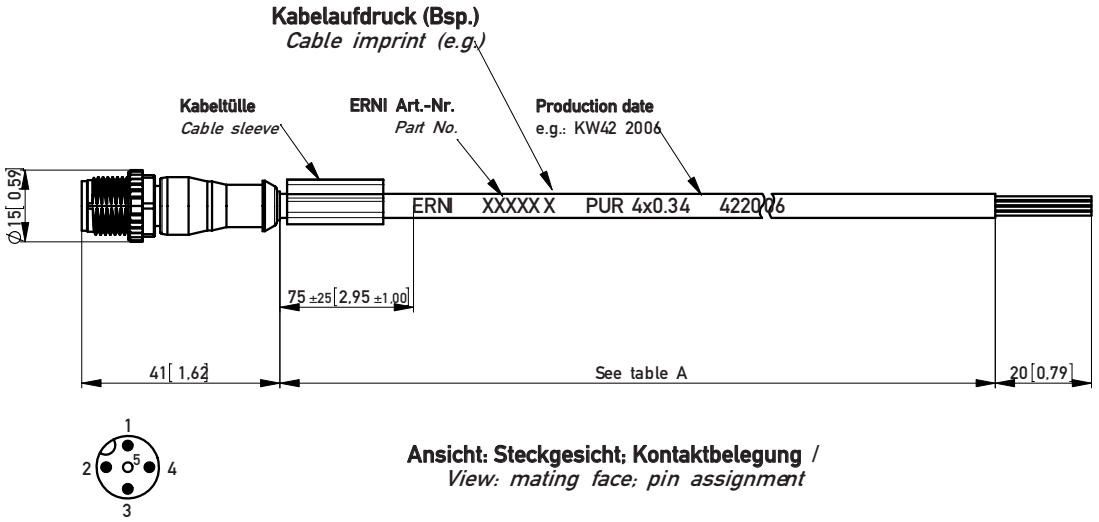

Ansicht: Steckgesicht; Kontaktbelegung /
View: mating face; pin assignment

Male straight - Female straight

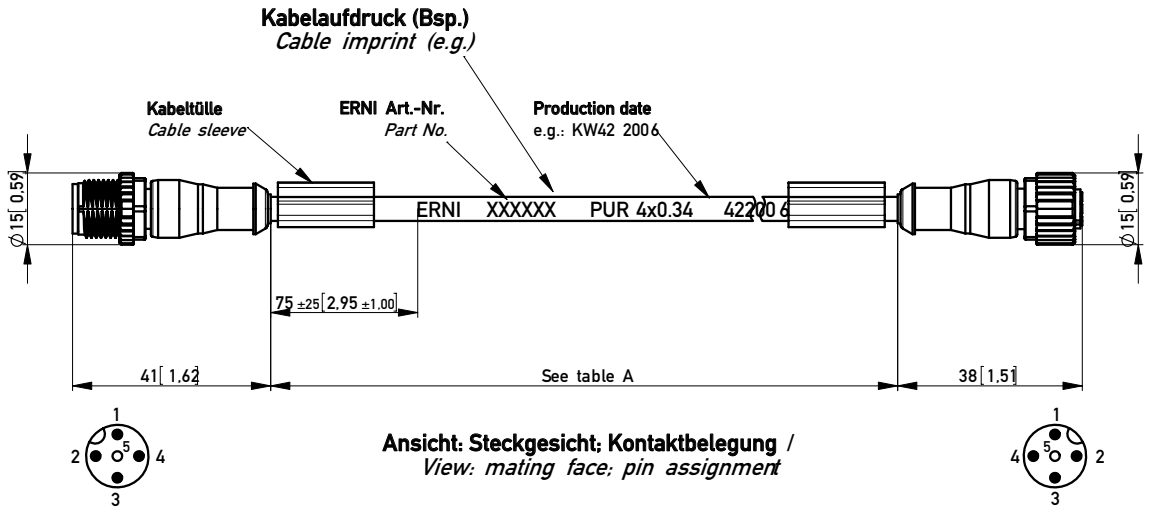

Ansicht: Steckgesicht; Kontaktbelegung /
View: mating face; pin assignment

Male straight - Female angled

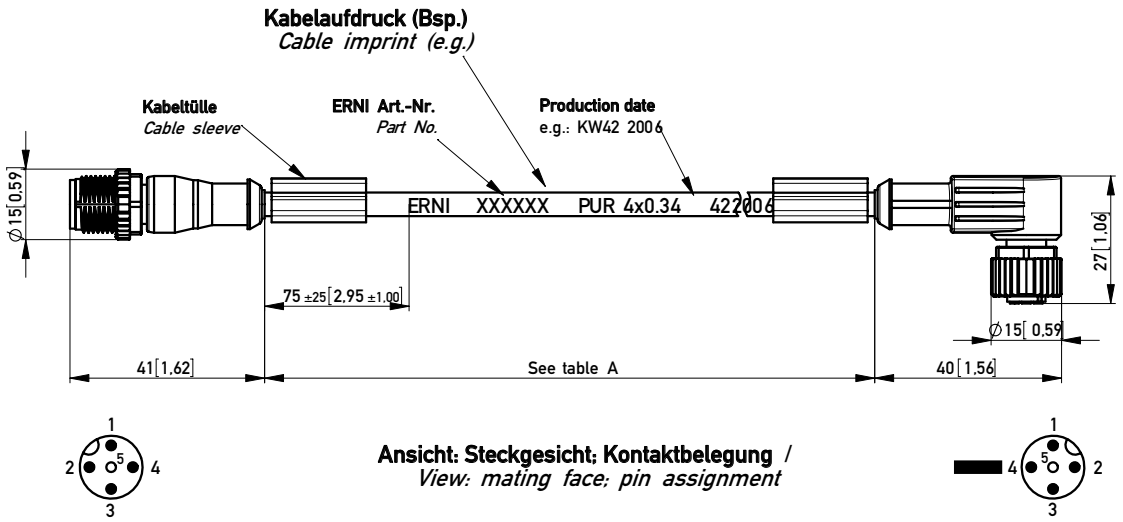

Male straight - Female angled, with LED

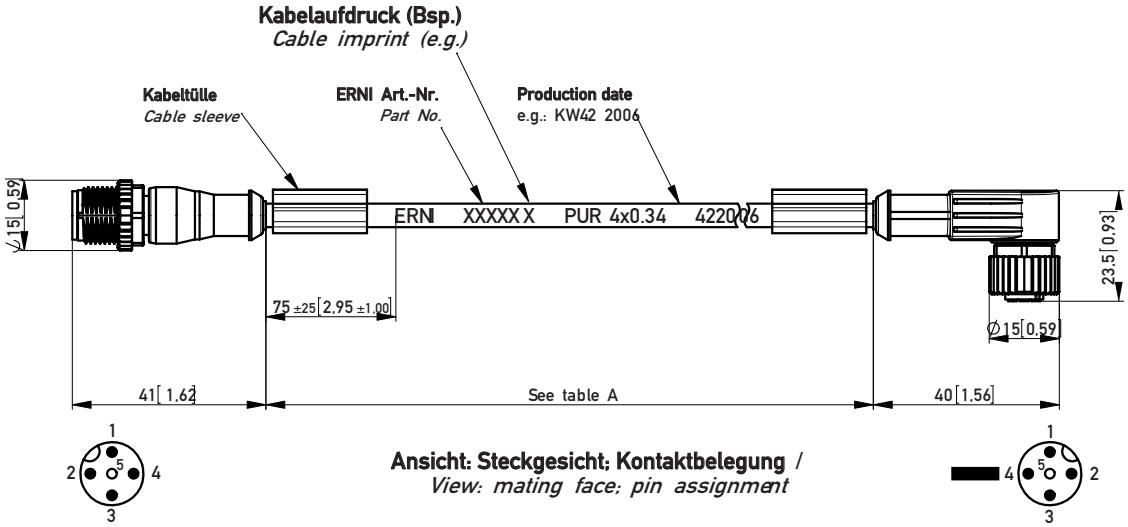

Male angled - Pigtail

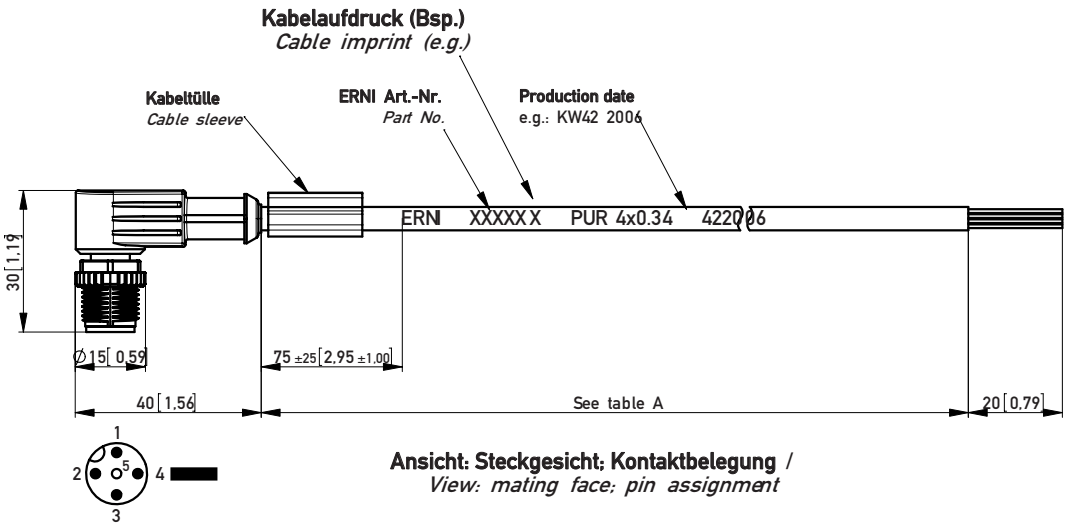

Male straight, D coding - Female straight, D coding

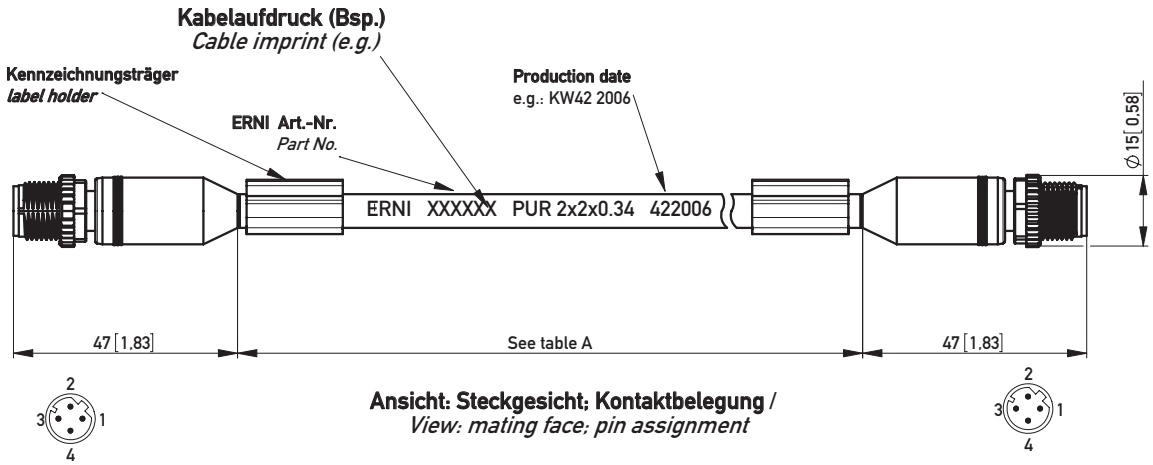

Ordering Information

Connector1	Connector2	No. of Pins	Length	Coding	Cable Type	Part Number
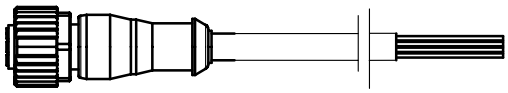						
Female straight	None	4	2.0 m	A	PVC	**223866**
Female straight	None	4	3.0 m	A	PVC	**223783**
Female straight	None	4	3.0 m	A	PUR	**223784**
Female straight	None	5	1.5 m	A	PVC	**223923**
Female straight	None	8	3.0 m	A	PUR	**225039**
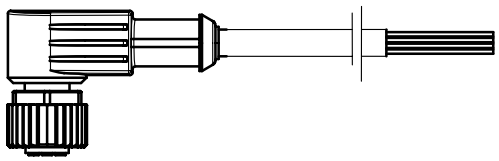						
Female angled	None	4	1.5 m	A	PUR	**223714**
Female angled	None	4	3.0 m	A	PVC	**223785**
Female angled, with LED	None	4	3.0 m	A	PVC	**223786**
Female angled, with LED	None	4	3.0 m	A	PUR	**223787**
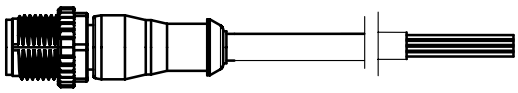						
Male straight	None	4	1.5 m	A	PUR	**223713**
Male straight	None	4	3.0 m	A	PVC	**223781**
Male straight	None	8	3.0 m	A	PUR	**225040**

Ordering Information

Connector1	Connector2	No. of Pins	Length	Coding	Cable Type	Part Number
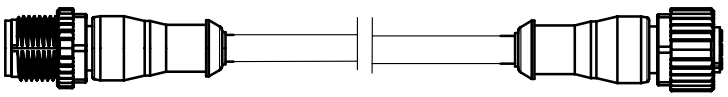						
Male straight	Female straight	4	1.0 m	A	PVC	**223788**
Male straight	Female straight	4	1.0 m	A	PUR	**223789**
Male straight	Female straight	5	1.0 m	A	TPM, shielded (CAN; DeviceNet)	**223944**
Male straight	Female straight	5	1.0 m	A	PUR, shielded (CAN; DeviceNet)	**354195**
Male straight	Female straight	5	1.5 m	A	PUR, shielded (CAN; DeviceNet)	**364415**
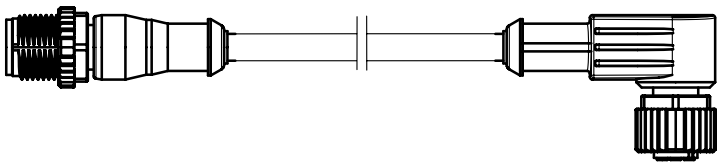						
Male straight	Female angled	4	1.0 m	A	PVC	**223790**
Male straight	Female angled	4	1.0 m	A	PUR	**223791**
Male straight	Female angled, with LED	4	0.3 m	A	PUR	**223715**
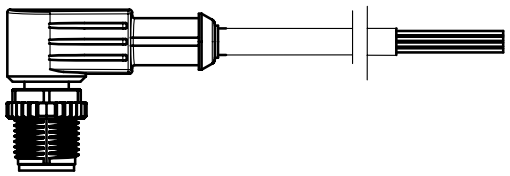						
Male angled	None	4	3.0 m	A	PVC	**223782**
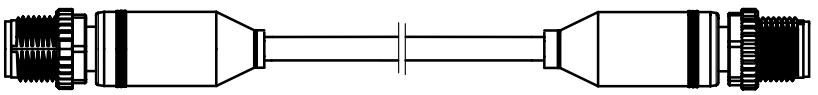						
Male straight	Male straight	4	1.5 m	D	PUR, shielded (Ethernet)	**223922**
Male straight	Male straight	4	3.0 m	D	PUR, shielded (Ethernet)	**223921**



When installing a fieldbus system sometimes pre-assembled cables may cause difficulties or even prevent from successful installation because of cables laying in cable ducts or going through narrow components and small gaps. This would increase the wiring time and therefore raise maintenance cost. ERNI's field-attachable quick termination connectors are an adequate and efficient solution ensuring highest flexibility for cabling of automation systems. Easy termination of standard cables is guaranteed by tool-less IDC technology.
Further features:

- reconnectable up to 10 times
- integrated strain-relief
- vibration-proof screw locking
- suitable for cable diameter 4.0 - 5.1 mm

Dimensional Drawings

4 Pin Female

Buchse M12 *M12 female*
4-polig */4 pin*

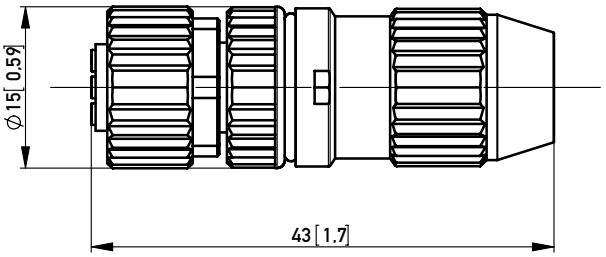

Quick termination technique (IDC)

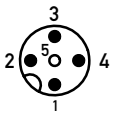

Ansicht: Steckgesicht; Kontaktbelegung /
View: mating face; pin assignment

4 Pin Male

Stecker M12 *M12 male*
4-polig */4 pin*

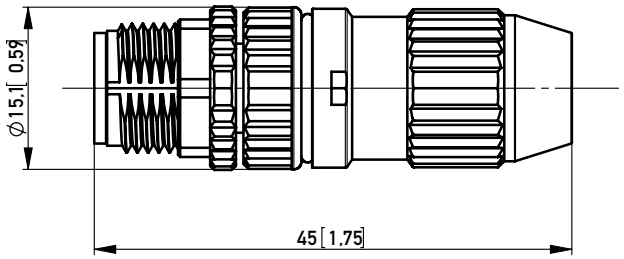

Quick termination technique (IDC)

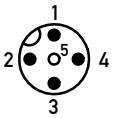

Ansicht: Steckgesicht; Kontaktbelegung /
View: mating face; pin assignment

All dimensions in mm.

Ordering Information

Configuration	No. of Pins	Termination	Coding	Part Number
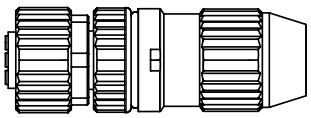				
Female M12	4	IDC	A	**254770**
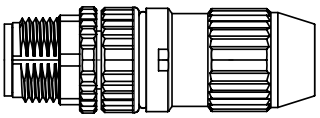				
Male M12	4	IDC	A	**254768**



Adapters are useful to reduce the amount of different parts on stock or on Bill Of Materials. Sometimes there are automation components on the market which are available only as M8 or M12 size. In many cases this requires a multitude of connectors from both technologies.
With adapters this can be reduced to one system, M8 or M12, that is easily manageable.
Adapters are also recommended for service issues i.e. replacement of cables as they allow greater flexibility.

Dimensional Drawings

3 Pin Version, M8 Male - M12 Female

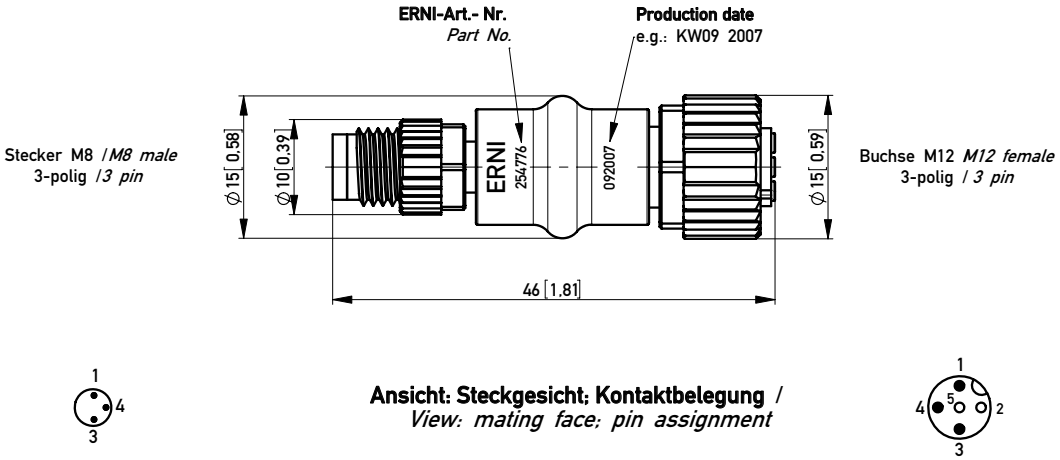

3 Pin Version, M12 Male - M8 Female

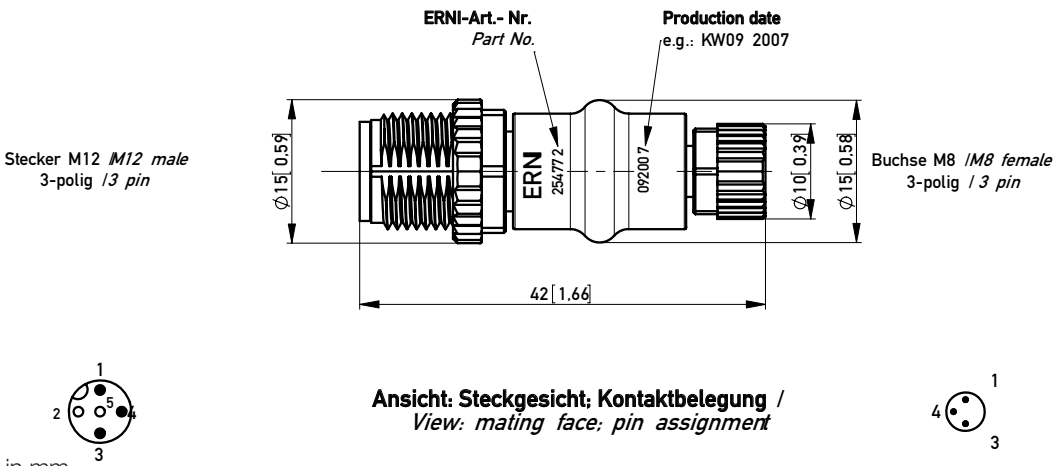

All dimensions in mm.

4 Pin Version, M8 Male - M12 Female

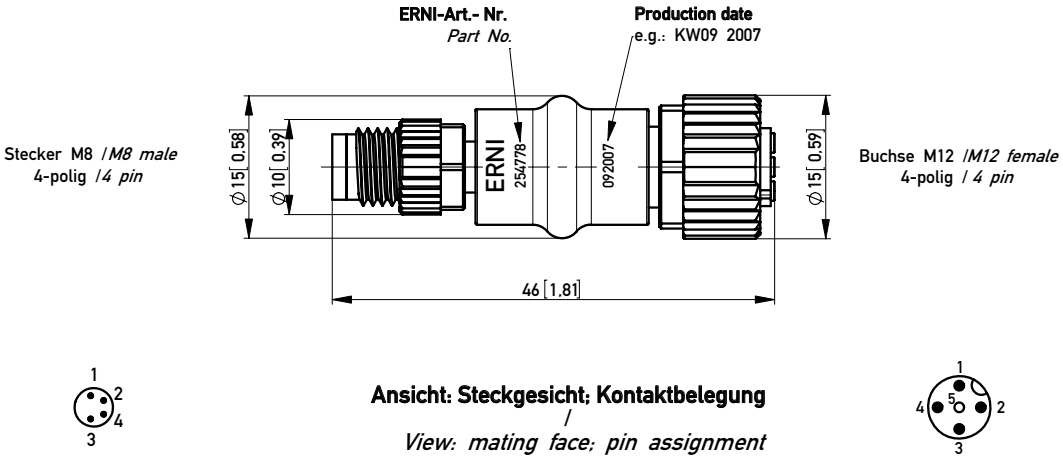

4 Pin Version, M12 Male - M8 Female

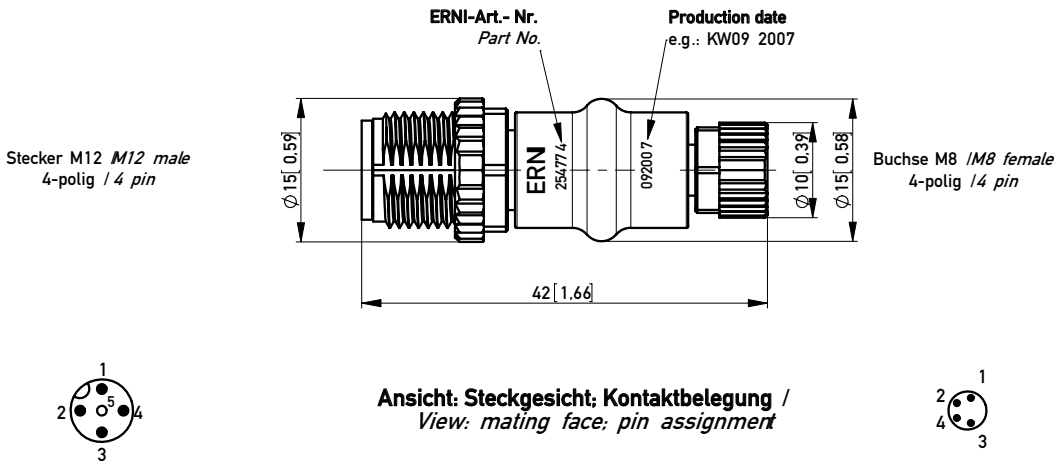

Ordering Information

Configuration	No. of Pins	Coding	Part Number
M8 Male - M12 Female	3	A	**254776**
M12 Male - M8 Female	3	A	**254772**
M8 Male - M12 Female	4	A	**254778**
M12 Male - M8 Female	4	A	**254774**

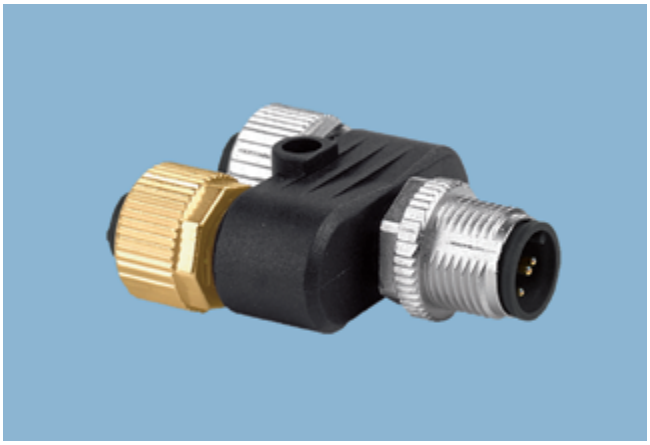

T-Couplers are used for space saving sensor connectivity. Two sensors/actuators can be merged to one cable. The coupler can be attached close to the machine e.g. near a pneumatic cylinder or directly screwed onto a sensor I/O distribution box by a designated mounting hole on the housing.
Features:

- self-securing screw locking, vibration-proof
- contact finish gold-plated for a minimum of 100 mechanical operations

Dimensional Drawings

1 x M12 Male, 4 pin - 2 x M8 Female, 3 pin

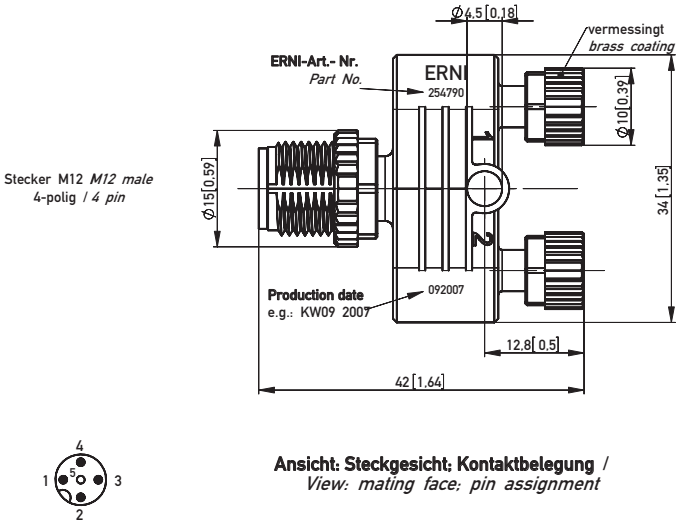

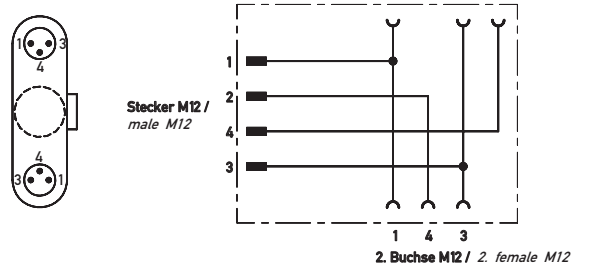

All dimensions in mm.

1 x M12 Male, 5 pin - 2 x M12 Female, 4 pin

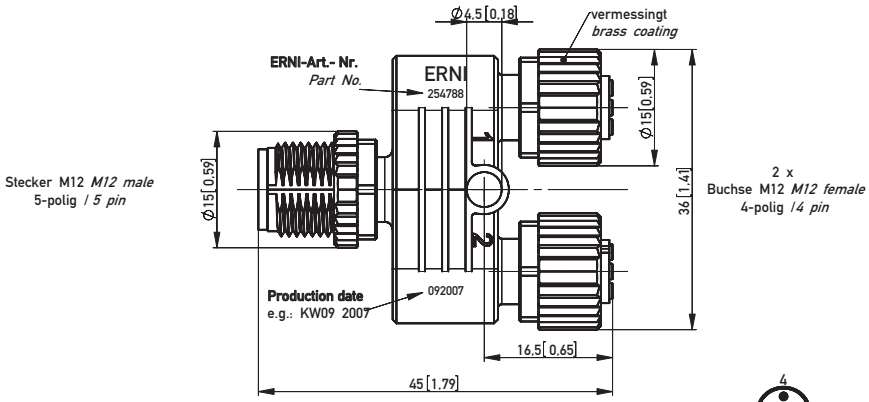



Ansicht: Steckgesicht; Kontaktbelegung /
View: mating face; pin assignment

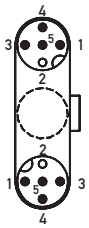

STROMLAUFPLAN /*Schematic diagram*

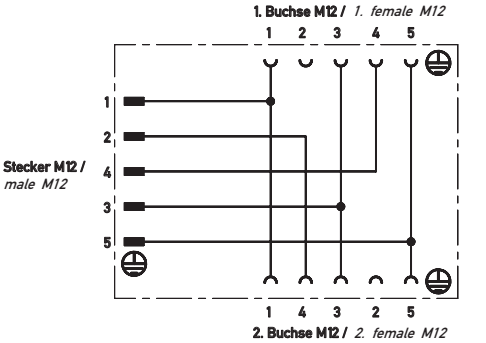

Ordering Information

Configuration	Coding	Part Number
1 x M12 Male, 4 pin - 2 x M8 Female, 3 pin	A	**254790**
1 x M12 Male, 5 pin - 2 x M12 Female, 4 pin	A	**254788**

Accessories
Panel Feed-Through



Panel feed-throughs are available for use when cables need to pass through cabinets, racks or other electrical devices. They ensure protection against dust and water immersion and therefore allow reliable connectivity to the field level.

Dimensional Drawing

M12 5 Pin Version, A Coding

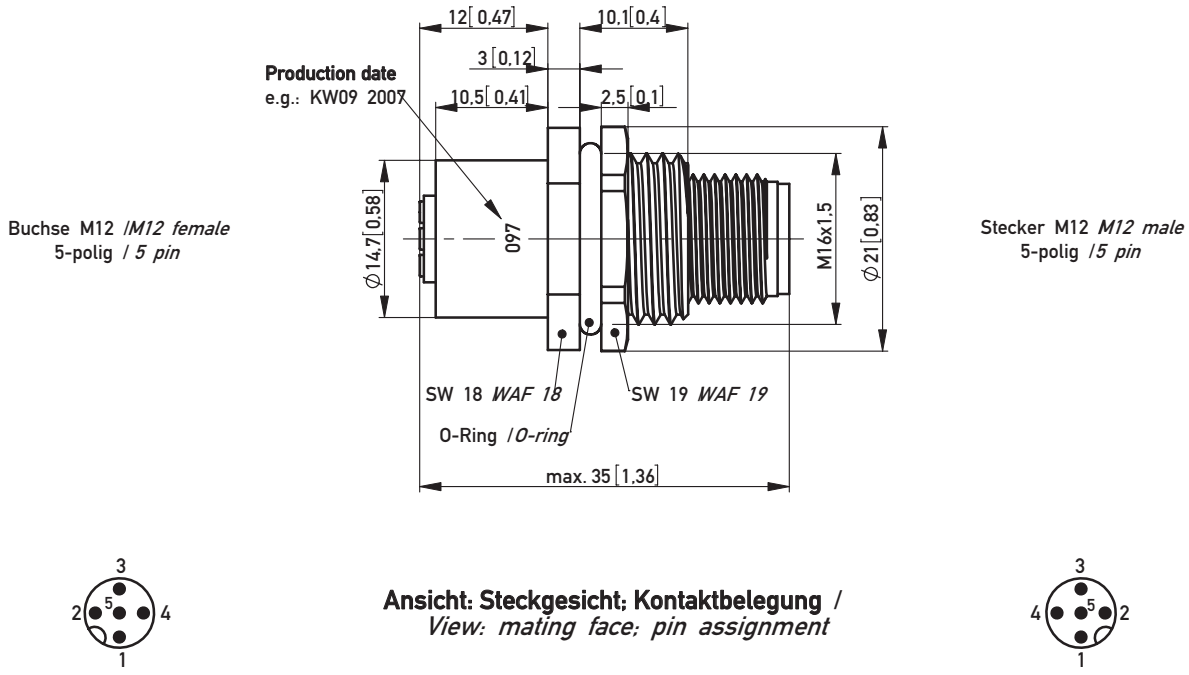

Ansicht: Steckgesicht: Kontaktbelegung /
View: mating face: pin assignment

All dimensions in mm.

M12 5 Pin Version, B Coding

Buchse M12 */M12 female*
5-polig */ 5 pin*

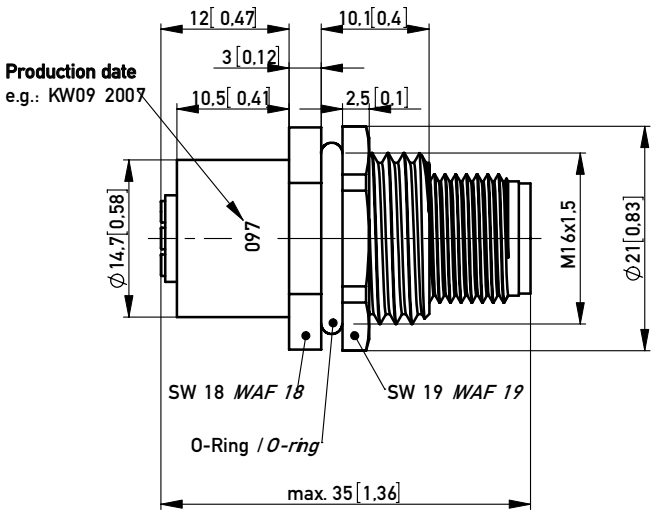

Stecker M12 *M12 male*
5-polig */5 pin*

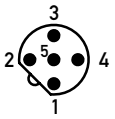

Ansicht: Steckgesicht; Kontaktbelegung /
View: mating face; pin assignment

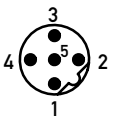

Ordering Information

Configuration	No. of Pins	Coding	Part Number
M12	5	A	**254780**
M12	5	B	**254782**

Part Number Index

Part Number	Page
194781	31
223710	23
223711	23
223712	24
223713	46
223714	46
223715	47
223762	23
223763	24
223764	23
223765	23
223766	23
223767	23
223768	23
223769	23
223770	23
223771	23
223772	23
223773	23
223774	23
223775	24
223776	23
223777	23
223778	24
223779	24
223780	24
223781	46
223782	47
223783	46
223784	46
223785	46
223786	46
223787	46
223788	47
223789	47
223790	47
223791	47
223866	46
223921	47
223922	47
223923	46
223933	23
223944	47
224064	31
224150	17
224151	17
224152	19
225039	46
225040	46
234040	32
234041	32
234233	17
234234	17
234235	19
244790	36
244798	37
254154	17
254188	36

Part Number	Page
254205	31
254206	31
254310	31
254317	37
254319	37
254737	38
254739	38
254758	27
254760	27
254762	27
254764	27
254768	49
254770	49
254772	51
254774	51
254776	51
254778	51
254780	55
254782	55
254788	53
254790	53
284067	17
284074	19
284322	31
284363	38
284377	38
284409	19
284740	36
284784	36
284809	36
284810	37
354003	38
354003	32
354130	37
354131	31
354132	36
354195	47
354217	38
354702	31
364175	32
364415	47
364767	36
364777	41
364779	41
364781	41
374342	38
374343	32
374728	32
374729	32
374947	37
384891	31
834898	19
834898	17
834899	38
834899	32
835243	41
835283	17
835284	32

ERNI

PICMG® Member

PROFI BUS

VITA VMEbus INTERNATIONAL TRADE ASSOCIATION

ISO 9001 CERTIFIED

www.erni.com

| Catalog E 074554 | 03/10 | Edition 4 |

ERNI Electronics GmbH & Co. KG
Seestrasse 9
73099 Adelberg/Germany
Tel +49 71 66 50-0
Fax +49 71 66 50-282
info@erni.de

Europe South America Africa Japan

ERNI Electronics Inc.
3005 E. Boundary Terrace
Midlothian, VA 23112/USA
Tel +1 804 228-4100
Fax +1 804 228-4099
info.usa@erni.com

North America Canada Mexico

ERNI Asia Holding Pte Ltd
23A Serangoon North Avenue 5
#04-11Singapore 554369
Tel +65 6 555 5885
Fax +65 6 555 5995
info.sg@erni.com

Asia Australia New Zealand

www.erni.com

© ERNI Electronics GmbH & Co. KG 2010 • Printed in Germany. A policy of continuous improvement is followed and the right to alter any published data without notice is reserved. ERNI®, MicroStac®, MicroSpeed®, MiniBridge®, MaxiBridge®, ERmet®, ERmet ZD®, ERbic® and ERNIPRESS® are trademarks (registered or applied for in various countries) of ERNI Electronics GmbH & Co. KG.

| Catalog E 074554 | 03/10 | Edition 4 |