NOTES

1. GENERAL:

1.1. ALL PRODUCT SPECIFICATIONS AND THEIR RELATED DOCUMENTS USING THIS FEATURE MUST REFERENCE THIS DOCUMENT AS THE CONTROLLING SPECIFICATION AND USE THE SAME BALLOON NUMBERS.

1.2. COMPLIANCY TO THIS DOCUMENT:
- a) COMPLIANCY MAY BE CLAIMED BY MEETING THE REQUIREMENTS IN THIS SPECIFICATION WITH THE DEVIATION IDENTIFIED AND MAY BE REFERENCED IN OTHER DOCUMENTS (DRAWINGS, DVP&R, ETC.) AS 'CONFORMS TO MOLEX 347350050 REV X.X'.
- b) PRODUCTS DESIGNED AFTER THE DATE OF RELEASE OF THIS DOCUMENT SHALL BE COMPLIANT TO THE CURRENT REVISION OF THIS DOCUMENT.
- c) PRODUCTS THAT HAVE MET PREVIOUS REVISION(S) OF THIS DOCUMENT SPECIFICATION SHALL STILL BE CONSIDERED 'MOLEX STANDARDS COMPLIANT' TO THOSE REVISIONS AND DO NOT NEED TO BE RE-VALIDATED.

1.3. DEVIATIONS TO THIS DOCUMENT ARE ALLOWABLE UNDER THE FOLLOWING CONDITIONS:
- a) ALL DEVIATIONS SHALL SHOW EQUAL OR BETTER PERFORMANCE (ELECTRICAL/MECHANICAL) AS REQUIRED BY VALIDATION SPECIFICATION.
- b) EXCEPTIONS ARE CLEARLY IDENTIFIED ON THE PRODUCT SPECIFICATION.
- c) ALL DEVIATIONS ARE APPROVED BY THE FOLLOWING INDIVIDUALS:
  - PERSON WHO HAS INTERFACE RESPONSIBILITY
  - PERSON WITH DESIGN STANDARD APPROVER AUTHORITY
- d) ALL RECORDS OF DEVIATION APPROVALS SHALL BE INCLUDED WITH CHANGE NOTICE DOCUMENTATION.

2. DESIGN - MATERIALS:

2.1. BASE MATERIAL TYPE : COPPER ALLOY

3. DESIGN - GEOMETRY:

3.1. THE 3-D CAD DATA IS BASIC (WITHOUT TOLERANCE) AND MASTER FOR THIS PART WITH EXCEPTION TO UNDERLINED DIMENSIONS. DIMENSIONAL INFORMATION NOT SHOWN ON THIS DRAWING IS DEFINED BY THE DATA FILE AT ITS LATEST REVISION.

3.2. PRODUCT DESIGN MODEL NUMBER(S): SEE BOM TABLE

3.3. GEOMETRIC DIMENSIONS AND TOLERANCES PER ASME Y14.5-2009

3.4. EDGES OF UNDEFINED SHAPE PER ISO 13715.

3.5. DIMENSIONS AND TOLERANCES APPLY BEFORE AND AFTER PLATING.

3.6. GENERAL TOLERANCES: SEE TITLE BLOCK

4. DESIGN - MANUFACTURING:

4.1. ANY REMAINING PROCESS LUBRICANT MUST NOT VARNISH OR DEGRADE ELECTRICAL PERFORMANCE. PROCESS LUBRICANTS SHOULD BE APPROVED BY THE RESPONSIBLE ENGINEER.

4.2. ALLOWABLE BURR: 0.03mm MAX UNLESS OTHERWISE SPECIFIED

4.3. FOR UNPLATES BLADES - TOOLING MARKS SPANNING ACROSS OR ALONG THE INTERFACING PROFILE OF THE BLADE SHOULD BE FURTHER INSPECTED. A TOOLING MARK DEEPER THAN 1 MICRON SHOULD NOT BE ACCEPTED.

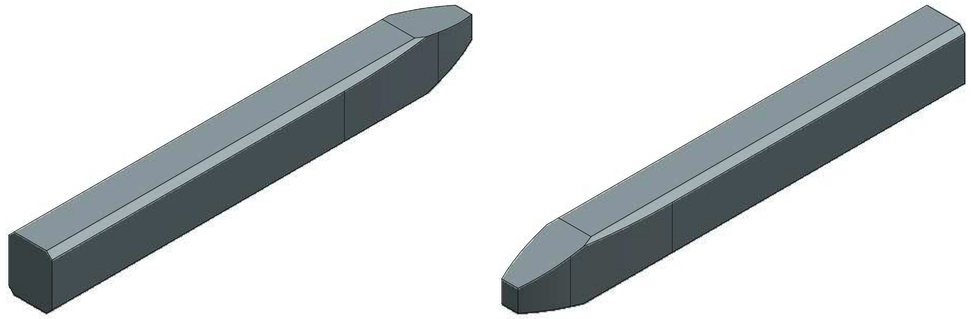

SCALE 50:1

0.5 MM PIN VIEW SHOWN FOR REPRESENTATION PURPOSES ONLY

QUALITY SYMBOLS	
EA	= 0
EC	= 0
EP	= 0
▼	= 0
C	= 0
☒	= 0
■	= 0
V	= 0

EC NO: 638183 2020/05/20
DRWN: SJAZRAWI 2020/05/23
CHK'D: YLEPOTTIER 2020/05/23
APPR: YLEPOTTIER

REV A19

THIS DRAWING CONTAINS INFORMATION THAT IS PROPRIETARY TO MOLEX ELECTRONIC TECHNOLOGIES, LLC AND SHOULD NOT BE USED WITHOUT WRITTEN PERMISSION

GENERAL TOLERANCES (UNLESS SPECIFIED)	
ANGULAR TOL ±	°
4 PLACES	±
3 PLACES	± 0.015
2 PLACES	± 0.05
1 PLACE	± 0.1
0 PLACES	±

DRAFT WHERE APPLICABLE MUST REMAIN WITHIN DIMENSIONS

DIMENSION UNITS	SCALE
mm	50:1
DRWN BY: SJAZRAWI	DATE: 2016/08/16
CHK'D BY	DATE
APPR BY: YLEPOTTIER	DATE: 2016/09/27
DRAWING SIZE: A1	THIRD ANGLE PROJECTION

molex®

DESIGN STANDARD
HEADER PIN & BLADE TIP GEOMETRY FOR MATING TO HARNESS TERMINALS

PRODUCT CUSTOMER DRAWING

SERIES	MATERIAL NUMBER	CUSTOMER
34735		

DOCUMENT NUMBER	DOC TYPE	DOC PART	SHEET NUMBER
347350050	PSD	000	1 OF 2

RELEASE STATUS	P1	RELEASE DATE	2020/05/23 03:21:07

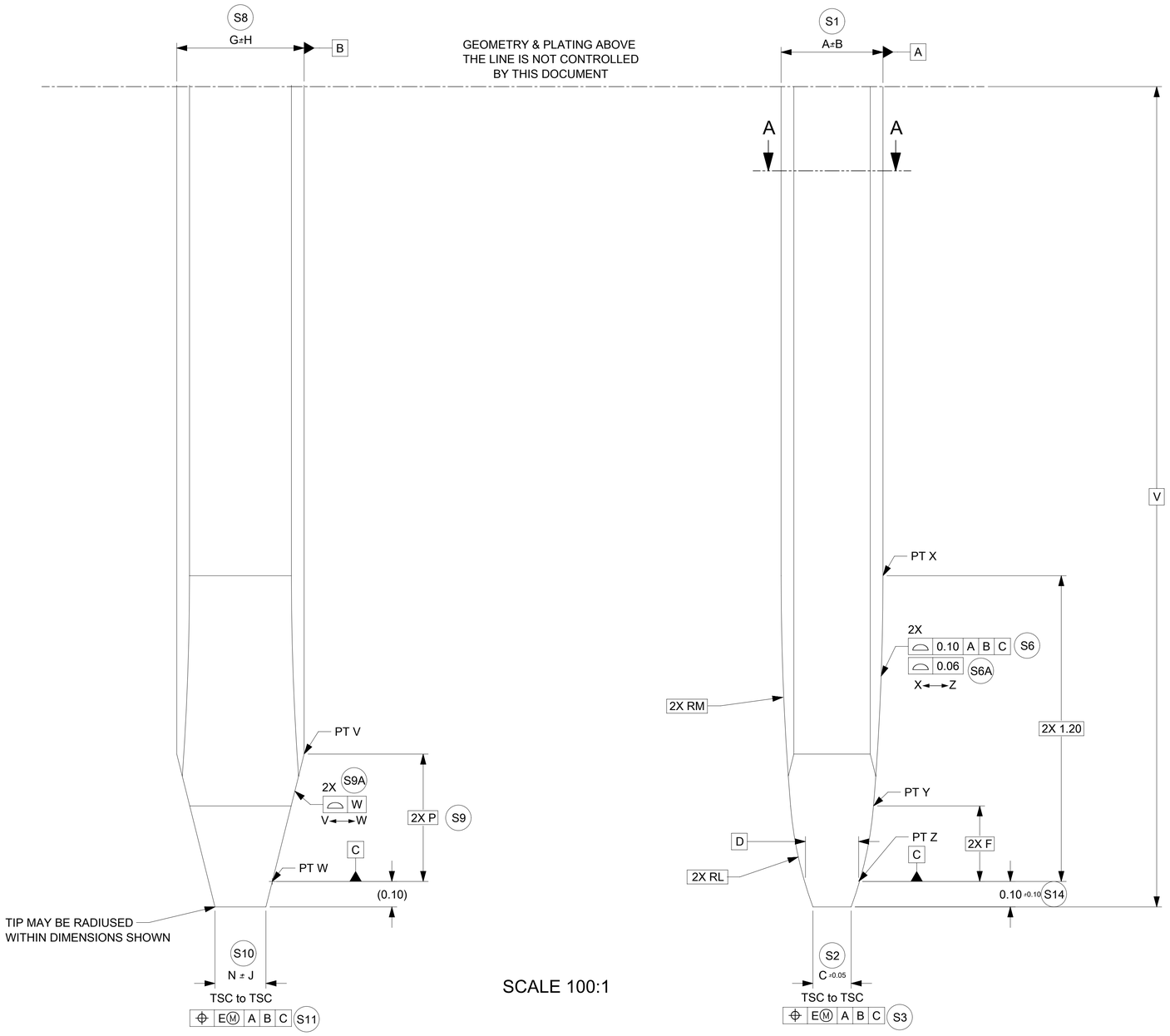

SCALE 100:1

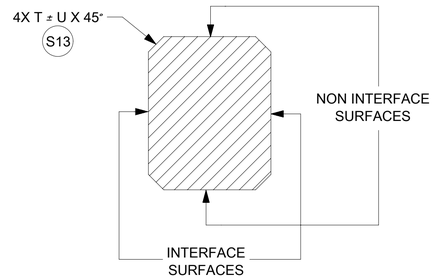

SECTION A-A

TABLE 1		DRAWING DIMENSIONS																
Model NO.	Description	A	B	C	D	E	F	G	H	J	L	M	N	P	T	U	V	W
34735-0004	0.50mm BLADE	0.40	0.015	0.15	0.216	0.05	0.296	0.50	0.03	0.05	1.5	11	0.20	0.50	0.05	0.03	4.0 MIN	0.08
34735-0001	0.64mm BLADE NORMAL THICKNESS	0.64	0.03	0.25	0.356	0.10	0.285	0.64	0.03	0.05	1	7	0.25	0.55	0.05	0.03	5.5 MIN	0.08
34735-0002	0.64mm BLADE - REDUCED THICKNESS	0.625	0.015	0.234	0.341	0.10	0.285	0.64	0.03	0.05	1	7	0.25	0.55	0.05	0.03	5.5 MIN	0.08
34735-0006	1.20mm BLADE - HEADER	0.60	0.015	0.21	0.316	0.10	0.285	1.00	0.05	0.05	1	7	0.59	0.55	0.05	0.03	5.5 MIN	0.13
34735-0006	1.20mm BLADE - INLINE	0.60	0.015	0.21	0.316	0.10	0.285	1.20	0.05	0.05	1	7	0.59	0.55	0.05	0.03	5.5 MIN	0.13
34735-0003	1.50mm BLADE	0.80	0.03	0.25	0.321	0.10	1.10	1.50	0.05	0.10	4.775	1.083	0.5	1.68	0.05	0.03	5.0 MIN	0.13
34735-0010	2.8mm BLADE - HEADER	0.80	0.025	0.20	0.345	0.10	0.314	2.50	0.10	0.10	1	4	1.80	1.10	0.05	0.03	9.5 MIN	0.25
34735-0011	6.3mm BLADE - HEADER	0.80	0.025	0.20	0.345	0.10	0.314	6.0	0.25	0.20	1	4	3.90	1.10	0.05	0.03	10.5 MIN	0.13

RELEASE STATUS	P1	RELEASE DATE	2020/05/23 03:21:07

QUALITY SYMBOLS
FA = 0
FC = 0
FP = 0
= 0
C = 0
= 0
= 0
C = 0

EC NO: 638183
DRWN: SJAZRAWI 2020/05/20
CHK'D: YLEPOTTIER 2020/05/23
APPR: YLEPOTTIER 2020/05/23

A19 REV

GENERAL TOLERANCES (UNLESS SPECIFIED)

ANGULAR TOL ±	°
4 PLACES	±
3 PLACES	± 0.015
2 PLACES	± 0.05
1 PLACE	± 0.1
0 PLACES	±

DRAFT WHERE APPLICABLE MUST REMAIN WITHIN DIMENSIONS

THIS DRAWING CONTAINS INFORMATION THAT IS PROPRIETARY TO MOLEX ELECTRONIC TECHNOLOGIES, LLC AND SHOULD NOT BE USED WITHOUT WRITTEN PERMISSION

DIMENSION UNITS: mm
SCALE: 100:1
DRWN BY: SJAZRAWI DATE: 2016/08/16
CHK'D BY: DATE:
APPR BY: YLEPOTTIER DATE: 2016/09/27
DRAWING SIZE: A1
THIRD ANGLE PROJECTION

molex®

DESIGN STANDARD
HEADER PIN & BLADE TIP GEOMETRY FOR MATING TO HARNESS TERMINALS

PRODUCT CUSTOMER DRAWING

SERIES	MATERIAL NUMBER	CUSTOMER
34735		

DOCUMENT NUMBER	DOC TYPE	DOC PART	SHEET NUMBER
347350050	PSD	000	2 OF 2

TABLE OF CONTENTS	
SHEET NO.	SHEET DESCRIPTION
1	NOTES AND BOM
2	CONFIGURATIONS
3	RECEPTACLE CONNECTOR ASSEMBLY

PART NUMBER AND MATING INTERFACE CHART

PART NUMBER	KEY	COVER COLOR	TERMINAL POSITIONS PLUGGED	CPA INCLUDED	INTERFACE PART NUMER
349674001	A	BLACK	NONE	YES	349684801
349674002	B	LIGHT GRAY	NONE	YES	349684802
349674003	C	DARK GRAY	NONE	YES	349684803
349674004	D	STONE GRAY	NONE	YES	349684804
349674021	A	BLACK	2	YES	349684801
349674005	A	BLACK	NONE	NO	349684801
349674006	B	LIGHT GRAY	NONE	NO	349684802
349674007	C	DARK GRAY	NONE	NO	349684803
349674008	D	STONE GRAY	NONE	NO	349684804
349674025	A	BLACK	2	NO	349684801
349674051	A	BLACK	1, 2	YES	349684801

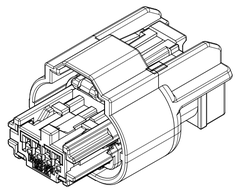

1X4

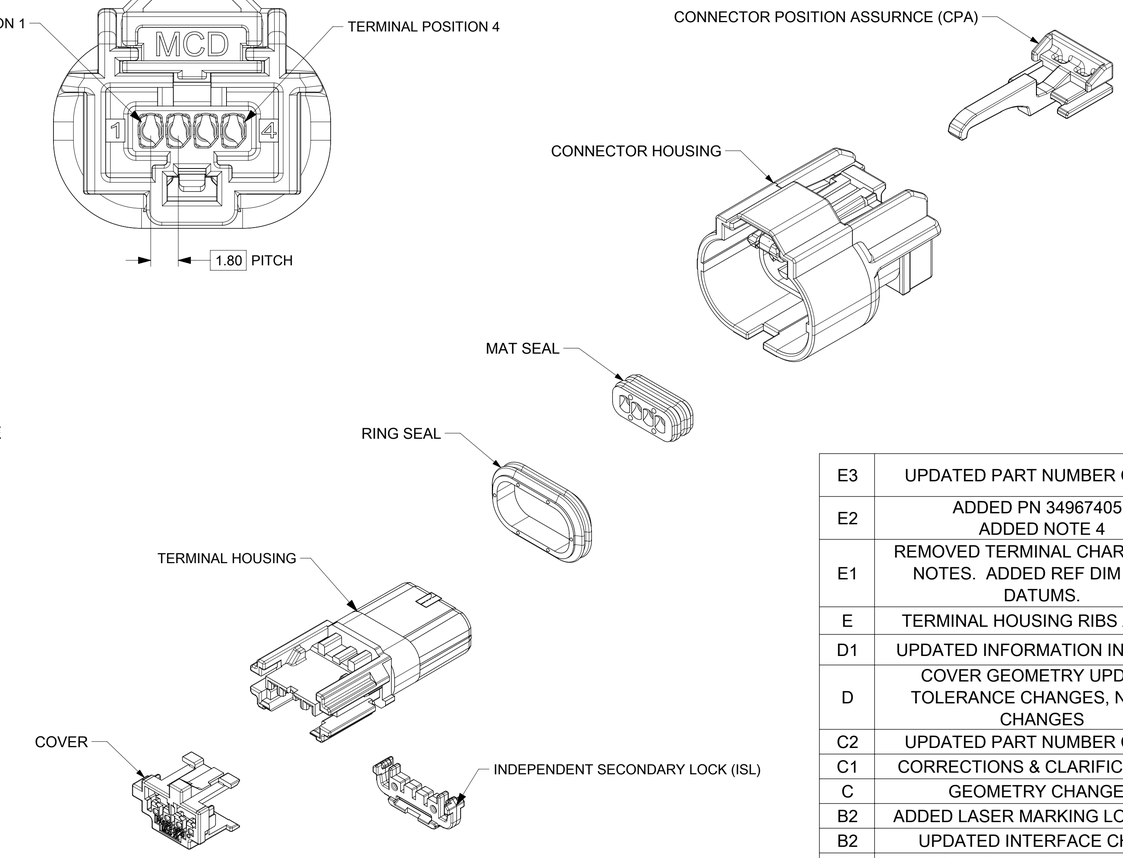

NOTES: VALID UNLESS OTHERWISE SPECIFIED

1. GENERAL:
A. APPLICATION SPECIFICATION SEE: AS-34894-0001
-CONTAINS: PRODUCT INTRODUCTION, PRODUCT SUMMARY, CONNECTOR ASSEMBLY, PACKAGING INFORMATION, CONNECTOR MATING, SERVICE INSTRUCTIONS, ELECTRICAL CONTINUITY CHECKING, CRIMPING, AND TROUBLESHOOTING.
B. TERMINALS TO BE USED WITH THIS ASSEMBLY:
MOLEX CTX50 SEALED RECEPTACLE TERMINALS
FOR INFORMATION ON TERMINALS SEE MOLEX DRAWING 349050400 AND TERMINAL PRODUCT SPECIFICATION PS-34905-001.
C. CONNECTOR PRODUCT SPECIFICATION SEE 349670001 PS
CONTAINS: PRODUCT INTRODUCTION, PRODUCT SUMMARY, RATINGS AND PRODUCT VALIDATION.
VALIDATED TO USCAR 2 REV 6.
RATINGS: T3 V1 S2
D. DESIGNED TO MATE WITH DEVICE INTERFACE AS SPECIFIED IN PART NUMBER AND INTERFACE CHART. SEE MOLEX DRAWING 349684800 FOR INTERFACE SPECIFICATION.
E. ASSEMBLY SHIPPED WITH ISL IN PRE-LOCK POSITION (SEE ISL PRE-LOCK VIEW SHEET 3).
F. PACKAGING SPECIFICATION PER MOLEX DRAWING: PK-31301-898
G. PARTS MUST BE IN COMPLIANCE TO MOLEX CHEMICAL SUBSTANCES FOR PRODUCTS AND PACKAGING SPECIFICATION: ES-40000-5016
H. DATA MUST BE SUBMITTED UNDER THE MOLEX PART NUMBER TO IMDS (COMPANY ID#13255)

2. DESIGN - MATERIALS:
CONNECTOR HOUSING: SPS/NYLON GF20 BLACK
TERMINAL HOUSING: SPS/NYLON GF20 BLACK
COVER: SPS/NYLON GF20 COLORS IN PART NUMBER CHART
ISL: SPS GF30 NATURAL
MAT SEAL: INHERENTLY LUBRICATED SILICONE LIGHT BLUE
RING SEAL: INHERENTLY LUBRICATED SILICONE RUST RED
CPA (OPTIONAL): PBT GF30 RED

3. DESIGN - GEOMETRY:
A. ALL GRAPHIC DATA IS BASIC (NO TOLERANCE) AND MUST BE TAKEN FROM THE DATA FILE AT ITS LATEST REVISION.
B. GEOMETRIC DIMENSIONS AND TOLERANCES PER ASME Y14.5M-2009
C. EDGES AND UNDIMENSIONED DETAILS PER ISO13715
D. CORNERS SHOWN AS SHARP TO BE R 0.2 MAX.
E. LETTERING SHALL BE 0.15 MAX RAISED IN 0.25 MAX RECESS PAD. THIS INCLUDES RECYCLING CODE, CAVITY ID, VENDOR IDENTIFICATION, AND CUSTOMER MATERIAL NUMBER.
F. VISUAL DEFECTS SHALL MEET COSMETIC STANDARD PS-45499-002 (Class B).
G. PARTS ARE LASER MARKED WITH PART NUMBER AND DATE CODE
4. FOR HAND CLEARANCES REQUIRED FOR MATING THE CONNECTOR, REFER TO USCAR 25-3 SECTION 8/8.2 FOR HAND PLUG CONNECTORS.

E3	UPDATED PART NUMBER CHART
E2	ADDED PN 349674051 ADDED NOTE 4
E1	REMOVED TERMINAL CHART FROM NOTES. ADDED REF DIM TO ID DATUMS.
E	TERMINAL HOUSING RIBS ADDED
D1	UPDATED INFORMATION IN NOTES
D	COVER GEOMETRY UPDATE, TOLERANCE CHANGES, NOTES CHANGES
C2	UPDATED PART NUMBER CHART
C1	CORRECTIONS & CLARIFICATIONS
C	GEOMETRY CHANGES
B2	ADDED LASER MARKING LOCATION
B2	UPDATED INTERFACE CHART
B1	UPDATED INTERFACE LAYOUT
B	COMPONENT MODEL UPDATE
A1	UPDATED VIEWS & INTERFACE CHART
A	MINOR UPDATES
1	INITIAL RELEASE
REV	REV DESCRIPTION

INSPECTION NUMBER LOG
LAST NUMBER: 15
ADDED:
REMOVED: 2,4,7,8,9,13,14

FUNCTIONAL SYMBOLS: F A = 0; F C = 0; F D = 0

DIVISIONAL SYMBOLS

DIMENSION UNITS	SCALE
mm	1:1

GENERAL TOLERANCES (UNLESS SPECIFIED)	
ANGULAR TOL	± 3.0 °
4 PLACES	±
3 PLACES	±
2 PLACES	± 0.1
1 PLACE	± 0.2
0 PLACES	±

DRAFT WHERE APPLICABLE MUST REMAIN WITHIN DIMENSIONS

THIS DRAWING CONTAINS INFORMATION THAT IS PROPRIETARY TO MOLEX ELECTRONIC TECHNOLOGIES, LLC AND SHOULD NOT BE USED WITHOUT WRITTEN PERMISSION

CURRENT REV DESC: UPDATED PART NUMBER CHART

EC NO: 656180
DRWN: MLI149 2021/02/19
CHK'D: JCONDON 2021/02/22
APPR: JCONDON 2021/02/22

INITIAL REVISION:
DRWN: MNS02 2016/04/26
APPR: KDEKOSKI 2016/05/19

THIRD ANGLE PROJECTION | DRAWING: A1-SIZE | SERIES: 34967

molex

MINI50 SEALED 1X4 RCPT ASSY

PRODUCT CUSTOMER DRAWING

DOCUMENT NUMBER	DOC TYPE	DOC PART	REVISION
349674000	PSD	000	E3

MATERIAL NUMBER	CUSTOMER	SHEET NUMBER
SEE CHART		1 OF 3

DOCUMENT STATUS	P1	RELEASE DATE	2021/02/22 22:10:10

FORMAT: master-tb-prod-A1
TEMPLATE: 80000
DATE: 2020/11/4

SHEET DESCRIPTION
KEY CONFIGURATIONS

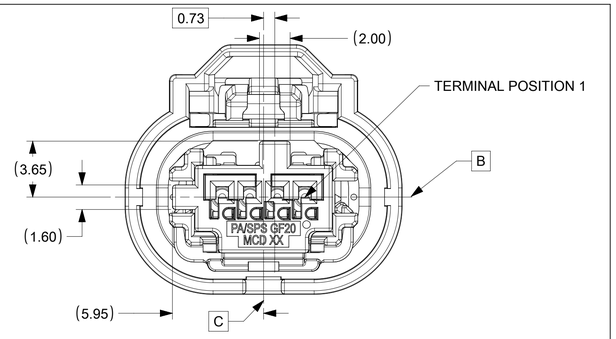

KEY A

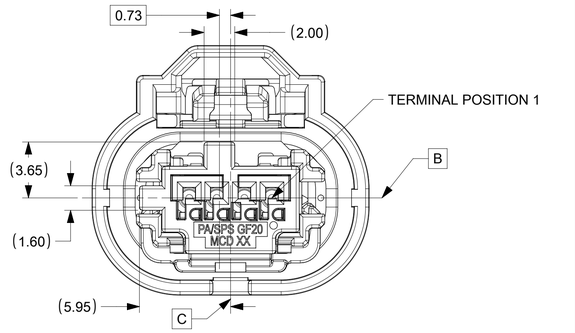

KEY B

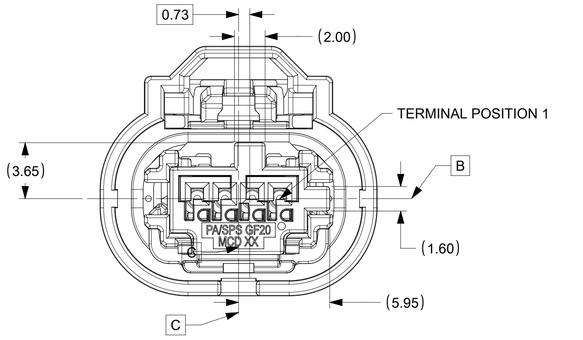

KEY C

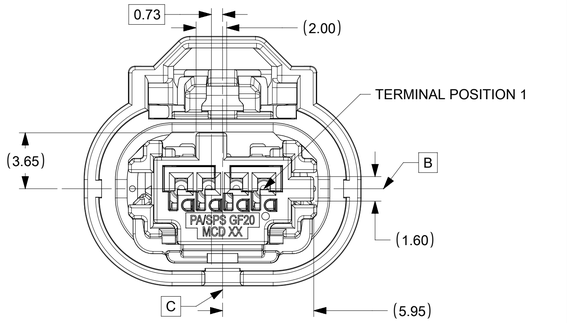

KEY D

DOCUMENT STATUS	P1	RELEASE DATE	2021/02/22 22:10:10

FORMAT: Name-Size-Rev.frt
TEMPLATE: 000000
DATE: 2020/11/14

FUNCTIONAL SYMBOLS: FA = 0, FC = 0, FP = 0

DIVISIONAL SYMBOLS

THIS DRAWING CONTAINS INFORMATION THAT IS PROPRIETARY TO MOLEX ELECTRONIC TECHNOLOGIES, LLC AND SHOULD NOT BE USED WITHOUT WRITTEN PERMISSION

DIMENSION UNITS	SCALE
mm	1:1

GENERAL TOLERANCES (UNLESS SPECIFIED)	
ANGULAR TOL	± 3.0 °
4 PLACES	±
3 PLACES	±
2 PLACES	± 0.1
1 PLACE	± 0.2
0 PLACES	±

DRAFT WHERE APPLICABLE MUST REMAIN WITHIN DIMENSIONS

CURRENT REV DESC: UPDATED PART NUMBER CHART

EC NO: 656180
DRWN: MLI149 2021/02/19
CHK'D: JCONDON 2021/02/22
APPR: JCONDON 2021/02/22

INITIAL REVISION:
DRWN: MNS02 2016/04/26
APPR: KDEKOSKI 2016/05/19

molex

MINI50 SEALED 1X4 RCPT ASSY

PRODUCT CUSTOMER DRAWING

DOCUMENT NUMBER	DOC TYPE	DOC PART	REVISION
349674000	PSD	000	E3

THIRD ANGLE PROJECTION	DRAWING	SERIES	MATERIAL NUMBER	CUSTOMER	SHEET NUMBER
	A1-SIZE	34967	SEE CHART		2 OF 3

SHEET DESCRIPTION
RECEPTACLE CONNECTOR ASSEMBLY

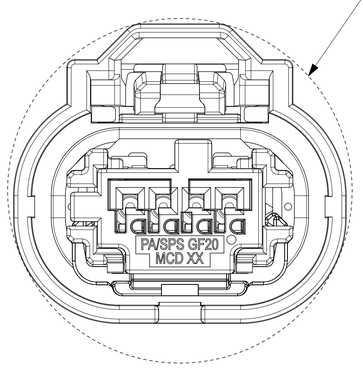

(1) Ø19.22 MIN PASS-THRU WITH NO CLEARANCE

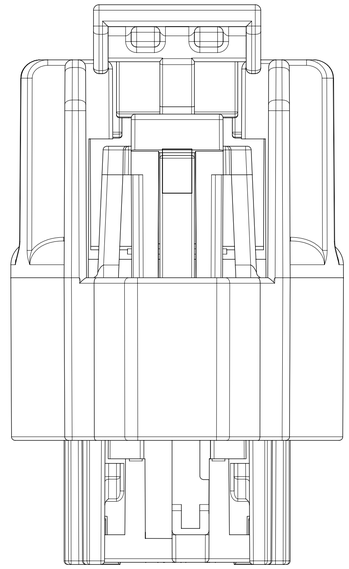

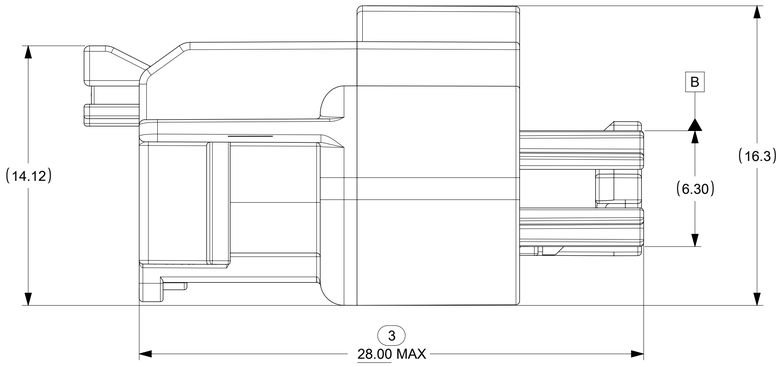

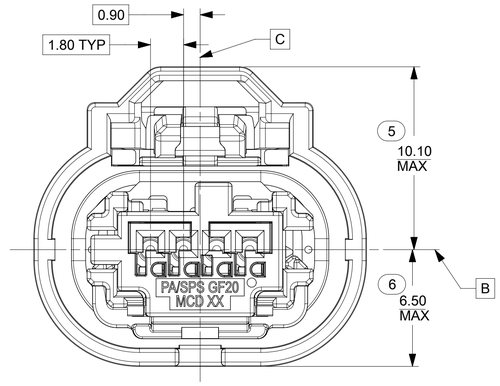

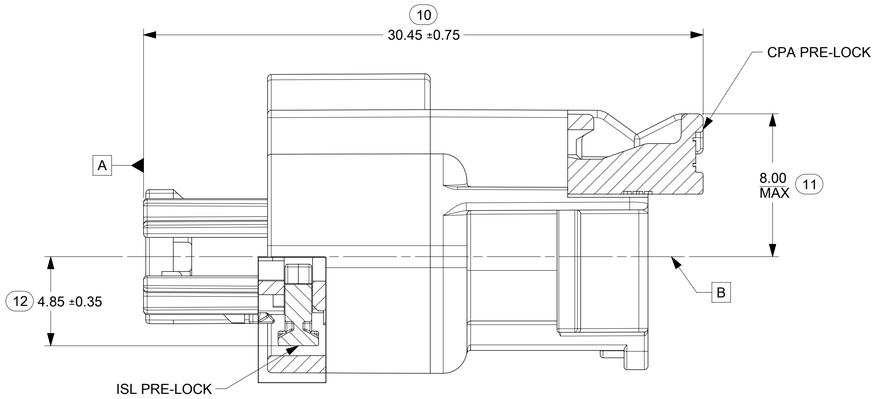

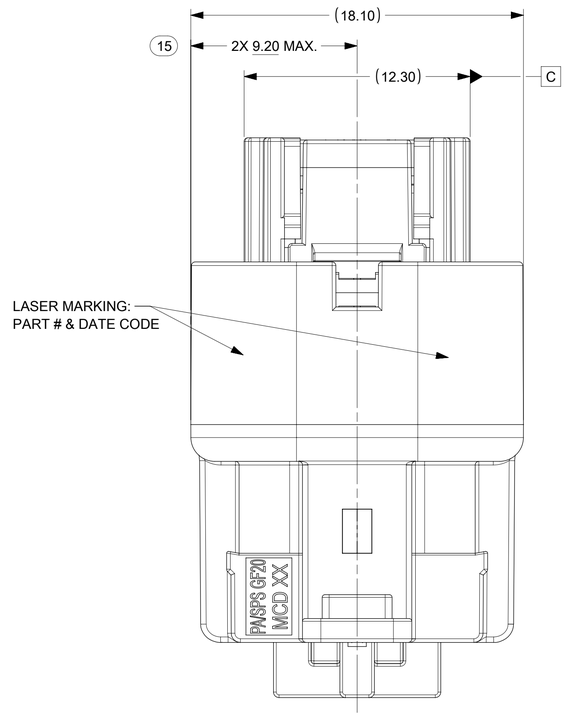

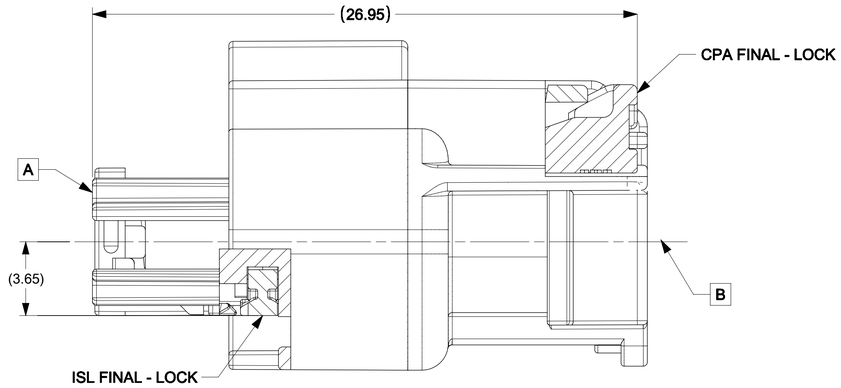

FUNCTIONAL SYMBOLS	THIS DRAWING CONTAINS INFORMATION THAT IS PROPRIETARY TO MOLEX ELECTRONIC TECHNOLOGIES, LLC AND SHOULD NOT BE USED WITHOUT WRITTEN PERMISSION				
FA = 0	DIMENSION UNITS: mm	SCALE: 1:1	CURRENT REV DESC: UPDATED PART NUMBER CHART		molex
FC = 0	GENERAL TOLERANCES (UNLESS SPECIFIED)				MINI50 SEALED 1X4 RCPT ASSY
FP = 0	ANGULAR TOL ± 3.0 °		EC NO: 656180		
	4 PLACES ±		DRWN: MLI149	2021/02/19	
DIVISIONAL SYMBOLS	3 PLACES ±		CHK'D: JCONDON	2021/02/22	PRODUCT CUSTOMER DRAWING
	2 PLACES ± 0.1		APPR: JCONDON	2021/02/22	
	1 PLACE ± 0.2		INITIAL REVISION:		DOCUMENT NUMBER: 349674000 / DOC TYPE: PSD / DOC PART: 000 / REVISION: E3
	0 PLACES ±		DRWN: MNS02	2016/04/26	
	DRAFT WHERE APPLICABLE MUST REMAIN WITHIN DIMENSIONS	THIRD ANGLE PROJECTION	APPR: KDEKOSKI	2016/05/19	
		DRAWING: A1-SIZE	SERIES: 34967	MATERIAL NUMBER: SEE CHART	CUSTOMER / SHEET NUMBER: 3 OF 3

DOCUMENT STATUS	P1	RELEASE DATE	2021/02/22 22:10:10

COPYRIGHT: creation file printed A1+
REFERENCE:
DATE: 2020/01/14

TABLE OF CONTENTS

SHEET NO.	SHEET DESCRITION
1	INTERFACE NOTES AND BOM
2	INTERFACE KEY CONFIGURATIONS
3	INTERFACE DEFINITION
4	INTERFACE DATUM TARGETS

MATING INTERFACE CHART

DESCRIPTION	COLOR	MODEL NUMBER	KEY
1x4, KEY A, BLACK	BLACK	349684801	A
1x4, KEY B, LIGHT GRAY	LIGHT GRAY	349684802	B
1x4, KEY C, DARK GRAY	DARK GRAY	349684803	C
1x4, KEY D, STONE GRAY	STONE GRAY	349684804	D

NOTES: VALID UNLESS OTHERWISE SPECIFIED

1. GENERAL:

REFER TO "SAE/USCAR 12 CONNECTOR GUIDELINES" AND "SAE/USCAR 2 PERFORMANCE SPECIFICATION FOR AUTOMOTIVE ELECTRICAL CONNECTOR SYSTEMS" FOR ADDITIONAL REQUIREMENTS.

2. DESIGN - MATERIALS:

a. HOUSING: SPS/NYLON 20% GLASS FILLED OR EQUIVALENT
FLAMMABILITY REQUIREMENT: PER ISO3795 OR GM3191
1. BURN RATE 100mm/MIN MAXIMUM
2. MATERIAL MUST BE SELF EXTINGUISHING

b. BLADE TERMINAL: SEE MOLEX SALES DRAWING 347350050. FOR MATERIAL, DIMENSIONAL, PLATING AND COATING REQUIREMENTS AND ANY BLADE TERMINAL DESIGN INFORMATION NOT SHOWN ON REFERENCED OR THIS DRAWING SEE EWCAP DWG NO. EWCAP-001.
1. TIN PLATING: 2.5-4.0 MICROMETERS MATTE TIN OVER 1.25-2.25 MICROMETERS DUCTILE SULFAMATE NICKEL
2. SILVER PLATING: 1.9-3.3 MICROMETERS SILVER OVER 1.0-1.8 MICROMETERS DUCTILE SULFAMATE NICKEL.
ANTI-TARNISH: SYNTHETIC HYDROCARBON CONTACT SURFACE FINISH OR EQUIVALENT APPLIED WITHOUT VOID TO CONTACT AREA

c. STANDARD COLORS FOR KEYING (SEE CHART). DEVATION REQUIRES APPROVAL OF AUTHORIZED PERSON.

3. DESIGN - GEOMETRY:

a. THE 3-D CAD DATA IS BASIC (WITHOUT TOLERANCE) AND THE MASTER FOR THIS PART WITH THE EXCEPTION OF UNDERLINED DIMENSIONS. DIMENSIONAL INFORMATION NOT SHOWN IN THIS DRAWING IS DEFINED BY THE DATA FILE AT ITS LATEST REVISION.
b. PRODUCT DESIGN MODEL NUMBER(S): SEE MATING INTERFACE CHART
c. GEOMETRIC DIMENSIONS AND TOLERANCES PER ASME Y14.5M - 2009
d. GENERAL TOLERANCES: SEE TITLE BLOCK
e. EDGES AND UNDIMENSIONED DETAILS PER ISO13715
f. CORNERS SHOWN AS SHARP TO BE R 0.2 MAX.
g. LETTERING SHALL BE 0.15 MAX RAISED IN 0.25 MAX RECESS PAD.
THIS INCLUDES RECYCLING CODE, CAVITY ID, VENDOR IDENTIFICATION, AND CUSTOMER MATERIAL NUMBER.
(FOR SMALL PARTS: LETTERING SHALL BE 0.10 MAX RAISED IN 0.15 MAX RECESS PAD)

4. DESIGN - MANUFACTURING:

a. ALLOWABLE FLASH MAX 0.20 HIGH BY MAX 0.13 THICK.
b. ALLOWABLE SPLIT/PARTING LINE MISMATCH 0.2 MAX.
c. EJECTOR PIN MARKS TO BE FLUSH TO 0.25 MAX DEPRESSED. LOCATION MUST BE APPROVED BY PRODUCT ENGINEERING. EJECTOR PIN MARKS NOT PERMISSIBLE ON OR NEAR DATUM TARGET AREA.
d. ALLOWABLE GATE VESTIGE FLUSH TO 0.25 MAX RECESS. LOCATION MUST BE APPROVED BY PRODUCT ENGINEERING.
e. NO EXTERNAL MOLD RELEASE AGENT ALLOWED DURING MANUFACTURING.
f. NO PARTING LINES, MISMATCHES OR EJECTOR MARKS PERMISSIBLE WITHIN THE INDICATED SURFACE. TOOLING FOR INDICATED SURFACE MUST BE PROCESSED TO A SURFACE FINISH OF NTMA #70 (400 PAPER).
g. BLADE TERMINAL ENVIRONMENTAL BARRIER (USED WITH SILVER PLATED TERMINALS) SHALL NOT BE PRESENT ON ANY SURFACE OTHER THAN THE BLADE TERMINALS
h. NO PARTING LINES, FLASH, MISMATCHES OR EJECTOR MARKS PERMISSIBLE ON THE INDICATED NOSE SURFACE OR TRANSITION TO INTERNAL SHROUD SURFACE.

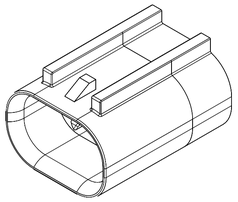

1X4

REV	DESCRIPTION
C4	REMOVED ICD-27A. CHANGED ICD-12 AND ICD-28
C3	ADDED SEE NOTE 2b TO PIN DETAILS, SHEET 3
C2	REMOVED SUBJECT TO CHANGE NOTE
C1	REVISED NOTES. SIMPLIFIED DIMENSIONING. REMOVED ICD-17, 19, 29, 31. ADDED ICD-3A, 7A, 8A, 9A, 27A. ADDED FP TO 12, 13, 16.
C	GEOMETRY CHANGES

INSPECTION NUMBER LOG
LAST NUMBER: ICD-30
ADDED:
REMOVED: ICD-27A

THIS DRAWING CONTAINS INFORMATION THAT IS PROPRIETARY TO MOLEX ELECTRONIC TECHNOLOGIES, LLC AND SHOULD NOT BE USED WITHOUT WRITTEN PERMISSION.

QUALITY SYMBOLS: FA = 0; FE = 0; FP = 0; = 0; C = 0; = 0; = 0; C = 0

EC NO: 659036 — 2021/02/26
DRWN: MLI149 — 2021/03/24
CHK'D: JCONDON — 2021/03/24
APPR: JCONDON

REV: C4

GENERAL TOLERANCES (UNLESS SPECIFIED)
ANGULAR TOL ± 3.0 °
4 PLACES ±
3 PLACES ±
2 PLACES ± 0.1
1 PLACE ± 0.2
0 PLACES ±
DRAFT WHERE APPLICABLE MUST REMAIN WITHIN DIMENSIONS

DIMENSION UNITS: mm
SCALE: 1:1
DRWN BY: MNS02 DATE: 2016/04/21
CHK'D BY DATE
APPR BY: KDEKOSKI DATE: 2016/05/04
DRAWING SIZE: A1
THIRD ANGLE PROJECTION

molex®

MINI50 SEALED 1X4 INTERFACE

PRODUCT CUSTOMER DRAWING

SERIES	MATERIAL NUMBER	CUSTOMER
34968	SEE CHART	

DOCUMENT NUMBER	DOC TYPE	DOC PART	SHEET NUMBER
349684800	PSD	000	1 OF 4

RELEASE STATUS	P1	RELEASE DATE	2021/03/24 15:08:42

Template: tb_prod.dot
ECO:659036 R
DATE: 2015/12/14

SHEET DESCRIPTION
KEY CONFIGURATIONS

1X4

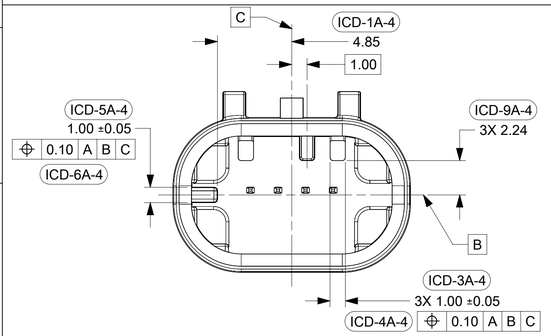

KEY OPTION A

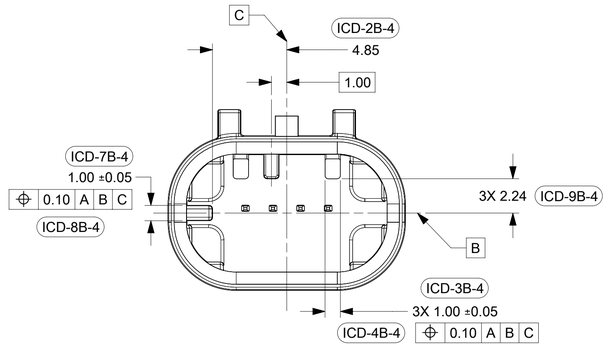

KEY OPTION B

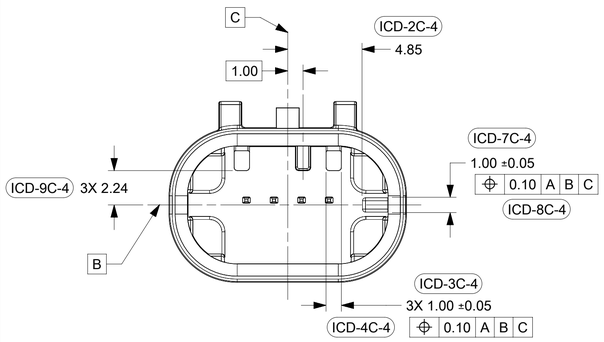

KEY OPTION C

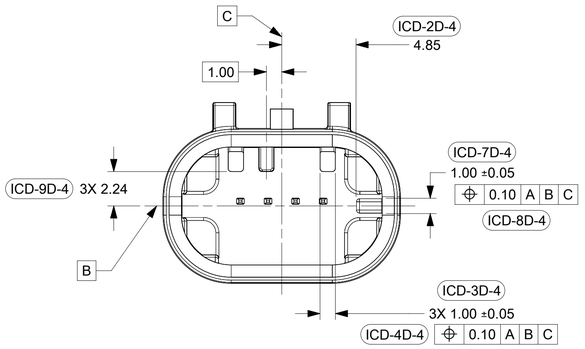

KEY OPTION D

RELEASE STATUS	P1	RELEASE DATE	2021/03/24 15:08:42

THIS DRAWING CONTAINS INFORMATION THAT IS PROPRIETARY TO MOLEX ELECTRONIC TECHNOLOGIES, LLC AND SHOULD NOT BE USED WITHOUT WRITTEN PERMISSION

QUALITY SYMBOLS: = 0 / = 0 / = 0 / = 0 / = 0 / = 0 / = 0 / = 0

EC NO: 659036 — 2021/02/26
DRWN: MLI149 — 2021/03/24
CHK'D: JCONDON — 2021/03/24
APPR: JCONDON

GENERAL TOLERANCES (UNLESS SPECIFIED)

ANGULAR TOL	±	3.0 °
4 PLACES	±	
3 PLACES	±	
2 PLACES	±	0.1
1 PLACE	±	0.2
0 PLACES	±	

DRAFT WHERE APPLICABLE MUST REMAIN WITHIN DIMENSIONS

REV: C4

DIMENSION UNITS: mm
SCALE: 1:1
DRWN BY: MNS02 — DATE: 2016/04/21
CHK'D BY — DATE
APPR BY: KDEKOSKI — DATE: 2016/05/04
DRAWING SIZE: A1
THIRD ANGLE PROJECTION

molex®

MINI50 SEALED 1X4 INTERFACE

PRODUCT CUSTOMER DRAWING

SERIES	MATERIAL NUMBER	CUSTOMER
34968	SEE CHART	

DOCUMENT NUMBER	DOC TYPE	DOC PART	SHEET NUMBER
349684800	PSD	000	2 OF 4

SHEET DESCRIPTION
CONNECTOR INTERFACE DEFINITION

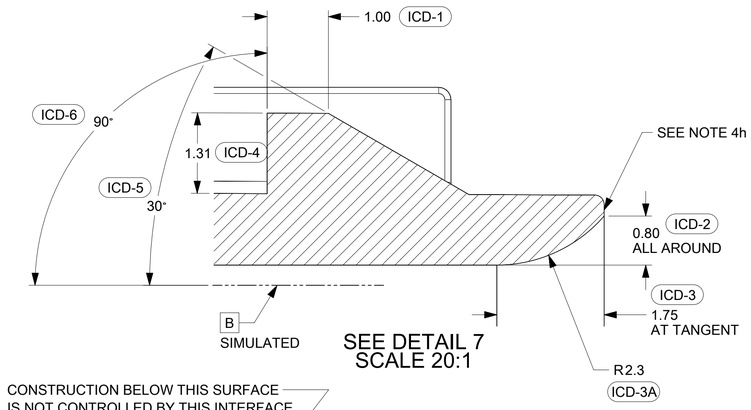

SEE DETAIL 7
SCALE 20:1

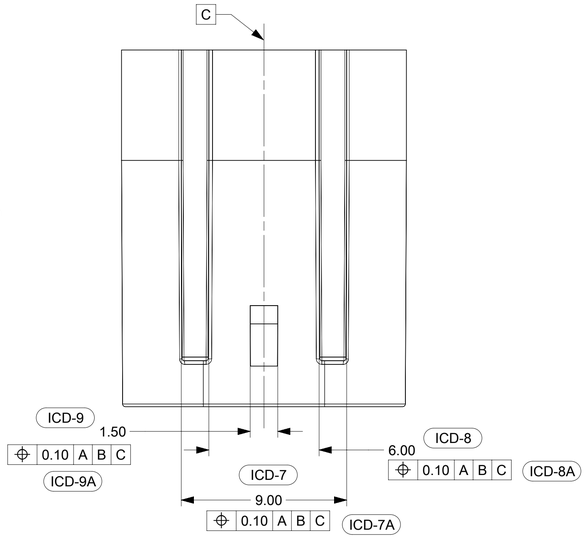

SEE NOTE 2b
REFER TO MOLEX SALES DWG 347350050
AND EWCAP DWG. NO. EWCAP-001 REV. P 050-T001
0.50 TERMINAL BLADE CONFIGURATION

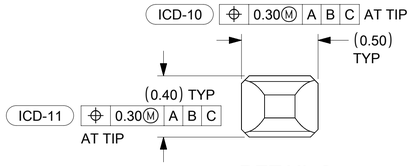

DETAIL 8
SCALE 50:1

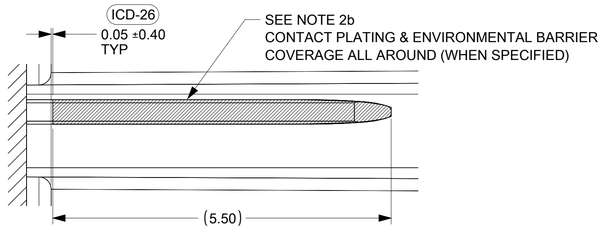

DETAIL 2
SCALE 20:1

CONSTRUCTION BELOW THIS SURFACE
IS NOT CONTROLLED BY THIS INTERFACE.
NO FEATURES MAY EXTEND ABOVE
THIS SURFACE.

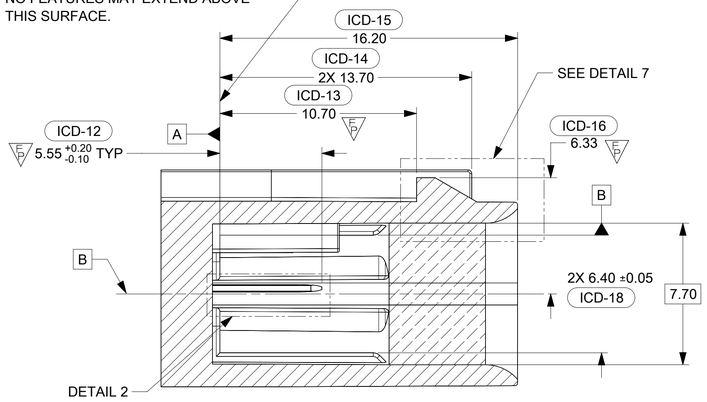

SECTION V-V

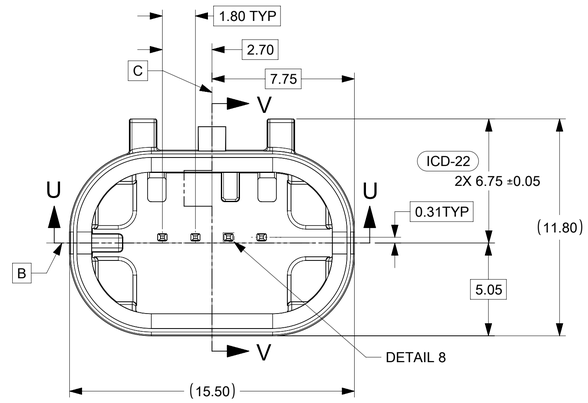

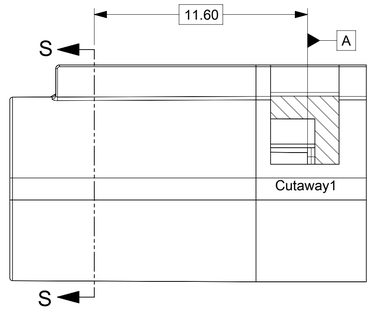

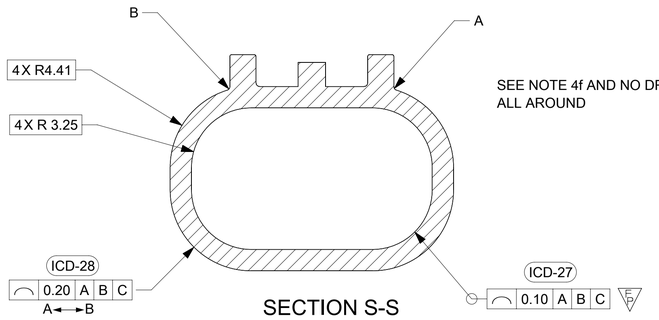

SECTION S-S
SCALE 10:1

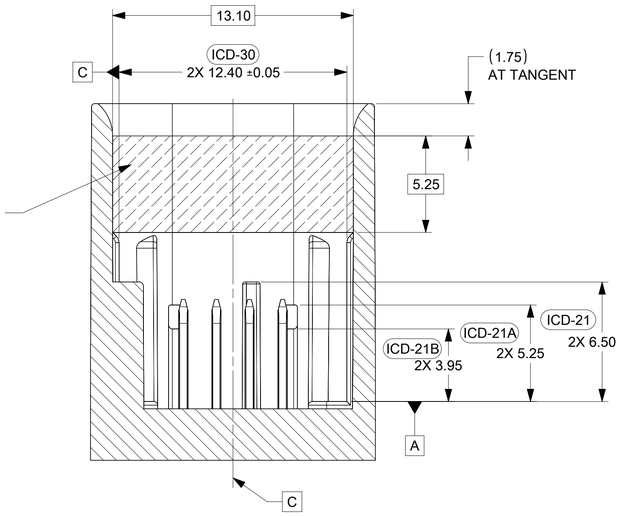

SECTION U-U

PACKAGING FRAME

IF HEADER IS RECESSED INTO A POCKET, THESE DIMENSIONS REPRESENT
THE MINIMUM CLEARANCE REQUIRED FOR THE MATING CONNECTOR SHROUD.

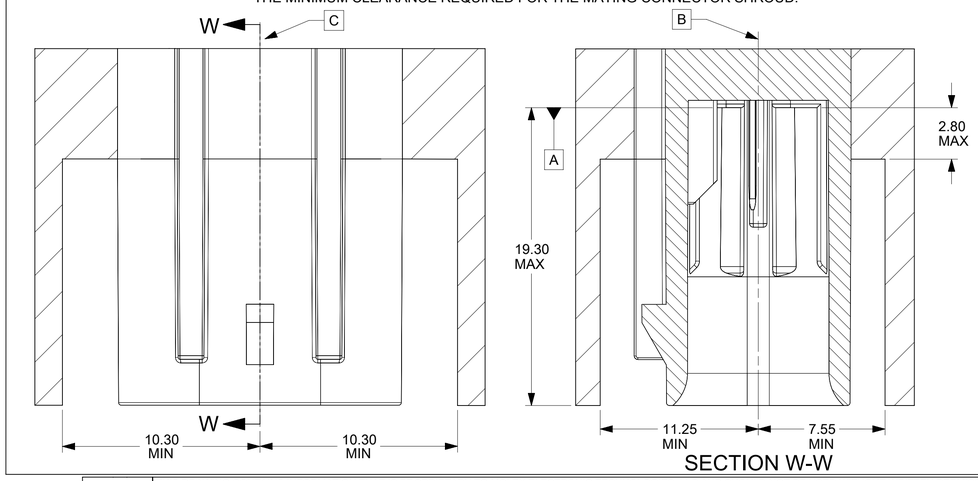

SECTION W-W

QUALITY SYMBOLS	
EA	= 0
EC	= 0
EP	= 0
	= 0
C	= 0
	= 0
	= 0
	= 0

EC NO: 659036	2021/02/26	
DRWN: MLI149	2021/03/24	
CHK'D: JCONDON	2021/03/24	
APPR: JCONDON		
REV	C4	

GENERAL TOLERANCES (UNLESS SPECIFIED)

ANGULAR TOL	±	3.0 °
4 PLACES	±	
3 PLACES	±	
2 PLACES	±	0.1
1 PLACE	±	0.2
0 PLACES	±	

DRAFT WHERE APPLICABLE MUST REMAIN WITHIN DIMENSIONS

THIS DRAWING CONTAINS INFORMATION THAT IS PROPRIETARY TO MOLEX ELECTRONIC TECHNOLOGIES, LLC AND SHOULD NOT BE USED WITHOUT WRITTEN PERMISSION

DIMENSION UNITS: mm	SCALE: 1:1
DRWN BY: MNS02	DATE: 2016/04/21
CHK'D BY	DATE
APPR BY: KDEKOSKI	DATE: 2016/05/04
DRAWING SIZE: A1	THIRD ANGLE PROJECTION

molex®

MINI50 SEALED 1X4 INTERFACE

PRODUCT CUSTOMER DRAWING

SERIES	MATERIAL NUMBER	CUSTOMER
34968	SEE CHART	

DOCUMENT NUMBER	DOC TYPE	DOC PART	SHEET NUMBER
349684800	PSD	000	3 OF 4

RELEASE STATUS	P1	RELEASE DATE	2021/03/24 15:08:42

SHEET DESCRIPTION
DATUM TARGETS

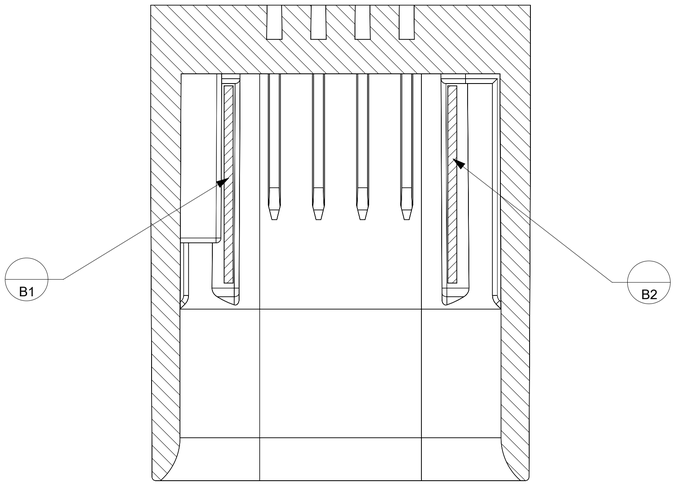

SECTION J-J
SCALE 8:1

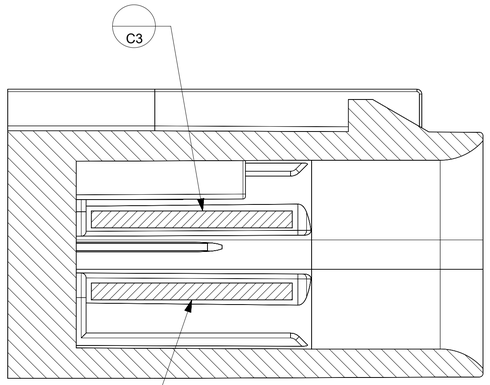

SECTION L-L
SCALE 8:1

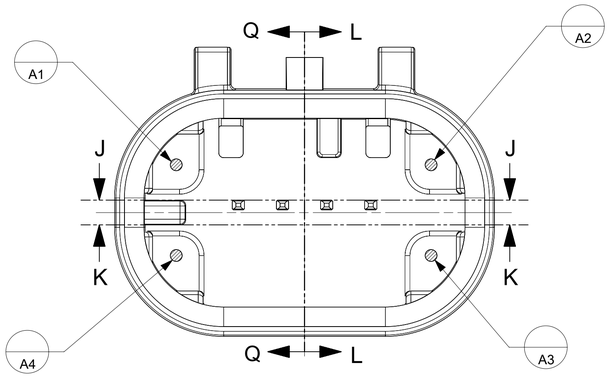

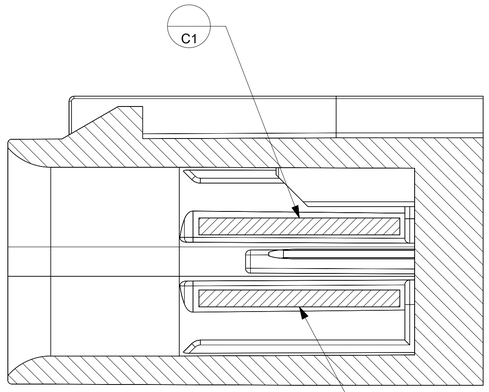

SECTION Q-Q
SCALE 8:1

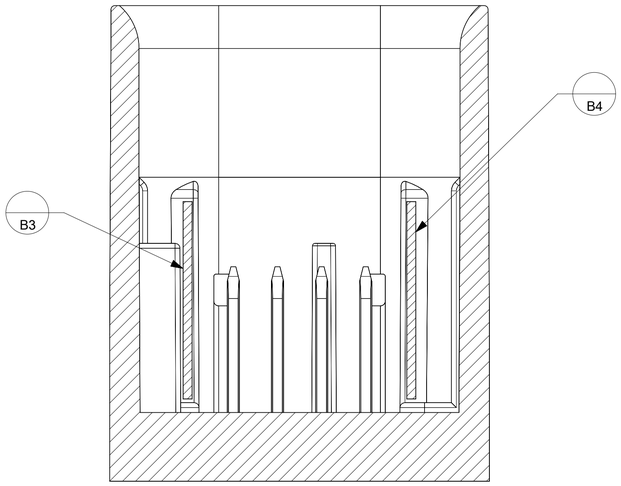

SECTION K-K
SCALE 8:1

QUALITY SYMBOLS	
= 0	
= 0	
= 0	
= 0	
= 0	
= 0	
= 0	
= 0	

EC NO: 659036 2021/02/26
DRWN: MLI149 2021/03/24
CHK'D: JCONDON 2021/03/24
APPR: JCONDON

C4 REV

THIS DRAWING CONTAINS INFORMATION THAT IS PROPRIETARY TO MOLEX ELECTRONIC TECHNOLOGIES, LLC AND SHOULD NOT BE USED WITHOUT WRITTEN PERMISSION.

GENERAL TOLERANCES (UNLESS SPECIFIED)		
ANGULAR TOL ±	3.0	°
4 PLACES	±	
3 PLACES	±	
2 PLACES	±	0.1
1 PLACE	±	0.2
0 PLACES	±	

DRAFT WHERE APPLICABLE MUST REMAIN WITHIN DIMENSIONS

DIMENSION UNITS	SCALE
mm	1:1
DRWN BY: MNS02	DATE: 2016/04/21
CHK'D BY	DATE
APPR BY: KDEKOSKI	DATE: 2016/05/04
DRAWING SIZE: A1	THIRD ANGLE PROJECTION

molex®

MINI50 SEALED 1X4 INTERFACE

PRODUCT CUSTOMER DRAWING

SERIES	MATERIAL NUMBER	CUSTOMER
34968	SEE CHART	

DOCUMENT NUMBER	DOC TYPE	DOC PART	SHEET NUMBER
349684800	PSD	000	4 OF 4

RELEASE STATUS	P1	RELEASE DATE	2021/03/24 15:08:42

COPYRIGHT - creation-file-group-A1
REV-DATE: 1L
DATE: 2016/12/14