FD-55111-C

HONEYWELL PART NUMBER
78303

REV	DOCUMENT	CHANGED BY	CHECK
C	0070272	SBH 12OCT10	CMH

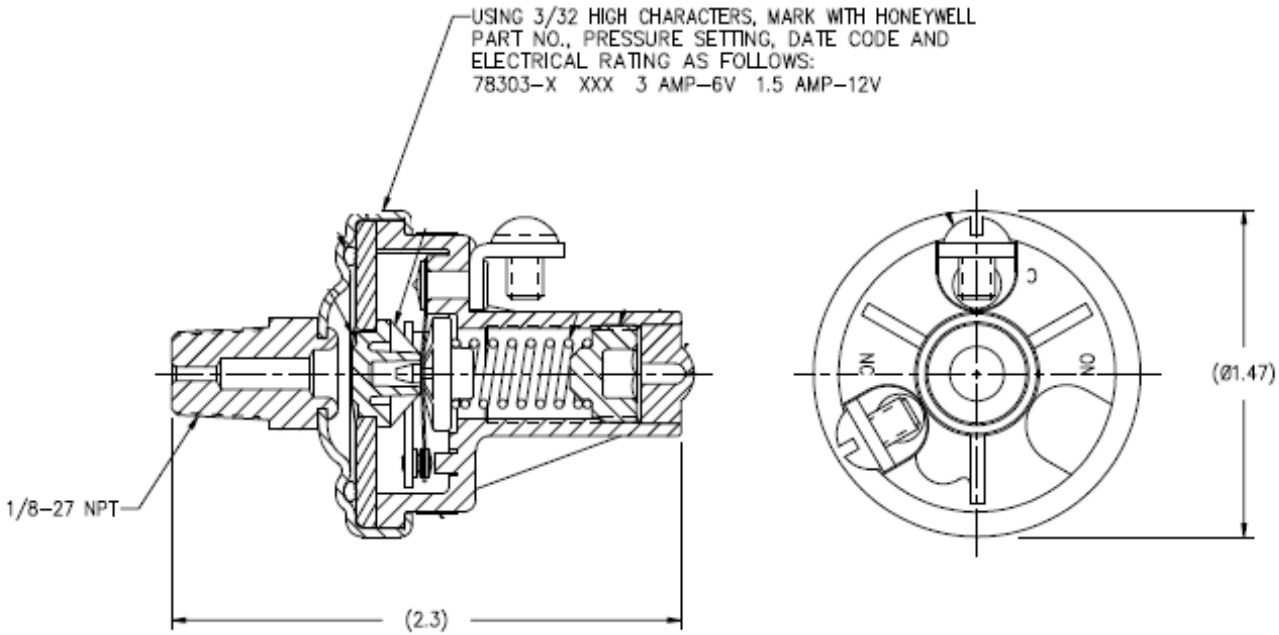

SIM. TO: 76063, M-4266

NOTES:
1. SINGLE CIRCUIT NORMALLY CLOSED PRESSURE SWITCH.
2. OPENING RANGE 25-50 ± 4 PSI.
3. SEE SPEC. 99005 FOR MANUFACTURING SPEC.

DESIGN UNITS: INCH TOLERANCES UNLESS NOTED:			
NO PLACES	X	±	–
ONE PLACE	.X	±	.020
TWO PLACE	.XX	±	.010
THREE PLACE	.XXX	±	.005
ANGLES	X	±	0° 30'

THIRD ANGLE PROJECTION

DRAWN	MRH	20MAR92
CHECK	–	–

THIS DRAWING COVERS A PROPRIETARY ITEM AND IS THE PROPERTY OF HONEYWELL. THIS DRAWING IS NOT TO BE COPIED OR USED WITHOUT THE PERMISSION OF HONEYWELL

INTERPRET PER ASME Y14.5M-1994
OTHER HONEYWELL ENGINEERING STANDARDS MAY APPLY

AUTOCAD 2D

Honeywell

TITLE: PRESSURE SWITCH N.C.
SCREW TERMINALS
UL 5000 SERIES SWITCH

SIZE	TYPE	CAGE CODE	DRAWING NAME	REV
B	E	–	78303	C

SCALE 2:1 SHEET 1 OF 1