PART NO.	ENGINEERING NO.	FINISHED LENGTH
1300060643	103003A01F030	3.0FT [91.4M]
1300060647	103003A01F060	6.0FT [1.8M]
1300060657	103003A01F200	20.0FT [6.1M]

REF. THIS DRAWING SUPERSEDES SD-130006-035 REV-1 (A)

PART NUMBER LEGEND

103003A01F030

POLE COUNT

FINISHED LENGTH:
F010= 1.0 FEET
F100= 10.0 FEET
M005= 0.5 METER
M010= 1.0 METER
M100= 10. METER

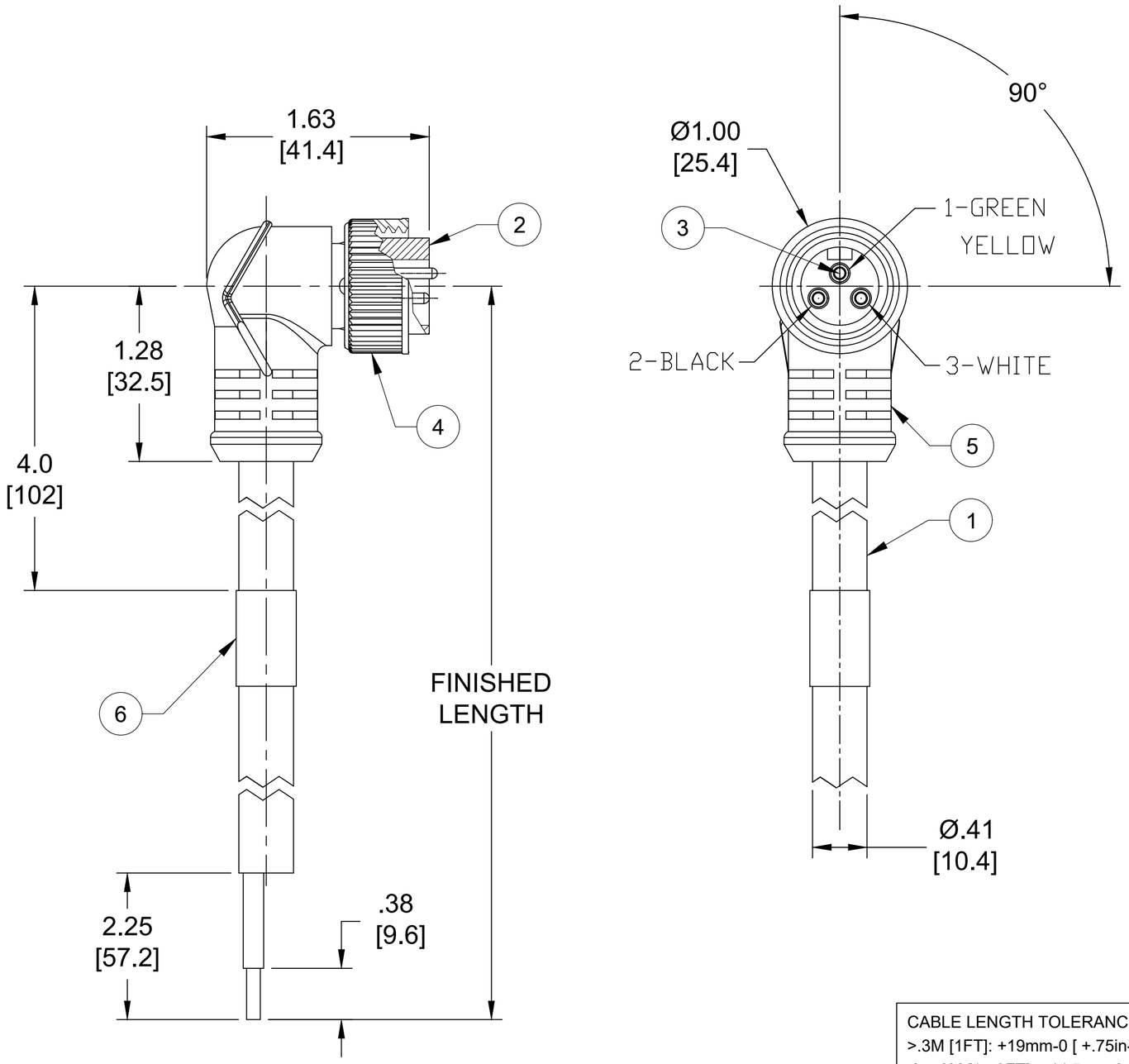

NOTES:
1. MATERIAL: AS NOTED
2. FINISH: AS NOTED
3. ELECTRICAL:
   VOLTAGE: 500V PER IEC60664
   600V PER UL2238
   CURRENT: 13A
4. TEMP RATING: -20°TO +80°C
5. PROTECTION: IP67 (WHEN MATED)
6. COUPLING THREAD: 7/8-16UN
7. UL RECOGNIZED FILE: E152210
   CSA CERTIFIED FILE: LR6837
8. ALL DIMS ARE FOR REFERENCE UNLESS TOLERANCED OR NOTED OTHERWISE

CABLE LENGTH TOLERANCES
>.3M [1FT]: +19mm-0 [+.75in-0]
.3 - .9M [1 - 3FT]: +44.5mm-0 [+1.75in-0]
.9 - 1.8M [3 - 6FT]: +55.6mm-0 [+2.19in-0]
1.8 - 3.7M [6 - 12FT: +88.9mm-0 [+3.50in-0]
3.7 - 7.3M [12 - 24FT]: +165.1mm-0 [+6.50in-0]
7.3-14.6M [24 - 48FT]: +317.5mm-0 [+12.50in-0]
14.6 - 30.5M [48-100FT]: +622.3mm-0 [+24.50in-0]
OVER 30M [100FT] +2% OF FINISHED LENGTH

ITEM	DESCRIPTION	MATERIAL	FINISH
6	WRAP LABEL	VINYL	BLACK/YELLOW
5	OVERMOLD	TPE	YELLOW
4	COUPLING NUT, INT. THD	ZINC DIE-CAST	NICKEL PLATED
3	CONTACT PIN	COPPER ALLOY	GOLD PLATED
2	MALE INSERT	TPE	YELLOW
1	CABLE, 16/3, STOOW	PVC JACKET	YELLOW

DOCUMENT STATUS	P1	RELEASE DATE	2019/10/03 19:14:54

THIS DRAWING CONTAINS INFORMATION THAT IS PROPRIETARY TO MOLEX ELECTRONIC TECHNOLOGIES, LLC AND SHOULD NOT BE USED WITHOUT WRITTEN PERMISSION

SYMBOLS: FA = 0, FC = 0, FP = 0, S = 0, ▼ = 0, C = 0, ☒ = 0, ■ = 0, C = 0

DIMENSION UNITS: INCH/MM
SCALE: 1:1

GENERAL TOLERANCES (UNLESS SPECIFIED)

	mm	INCH
4 PLACES	±----	±----
3 PLACES	±----	±----
2 PLACES	±----	±----
1 PLACE	±----	±----
0 PLACES	±----	±----

ANGULAR TOL ± ---- °

DRAFT WHERE APPLICABLE MUST REMAIN WITHIN DIMENSIONS

CURRENT REV DESC: REDRAWN, WAS SD-130006-035

EC NO: 624117
DRWN: RSTONE 2019/09/10
CHK'D: MZIELINSKI 2019/09/19
APPR: BWOODMAN 2019/10/03

INITIAL REVISION:
DRWN: RSTONE 2019/09/10
APPR: BWOODMAN 2019/10/03

THIRD ANGLE PROJECTION | DRAWING: C-SIZE | SERIES: 130006

molex

MINI CHANGE CABLE ASSY, 3P, MALE, 90 DEG
16AWG, STOOW, INTERNAL THREAD

PRODUCT CUSTOMER DRAWING

DOCUMENT NUMBER	DOC TYPE	DOC PART	REVISION
1300060643	PSD	000	A

MATERIAL NUMBER	CUSTOMER	SHEET NUMBER
	----	1 OF 1

FORMAT: ACAD-tb-prod-C
REVISION: A1
DATE: 2019/06/12