PART NO.	ENGINEERING NO.	FINISHED LENGTH
1201080688	E16A03004M010	1.0M [3'3"]
1201080183	E16A03004M020	2.0M [6'7"]
1201080599	E16A03004M030	3.0M [9'10"]
1201080600	E16A03004M050	5.0M [16'5"]
1201080743	E16A03004M100	10.0M [32'10"]

PART NUMBER LEGEND

E16A03004M010

FINISHED LENGTH:
M005= 0.5 METER
M010= 1 METER
M100= 10 METER

CABLE LENGTH TOLERANCES
>.3M [1FT]: +19mm-0 [+.75in-0]
.3 - .9M [1 - 3FT]: +44.5mm-0 [+1.75in-0]
.9 - 1.8M [3 - 6FT]: +55.6mm-0 [+2.19in-0]
1.8 - 3.7M [6 - 12FT: +88.9mm-0 [+3.50in-0]
3.7 - 7.3M [12 - 24FT]: +165.1mm-0 [+6.50in-0]
7.3-14.6M [24 - 48FT]: +317.5mm-0 [+12.50in-0]
14.6 - 30.5M [48-100FT]: +622.3mm-0 [+24.50in-0]
OVER 30M [100FT] +2% OF FINISHED LENGTH

FACE VIEW - M12 FEMALE

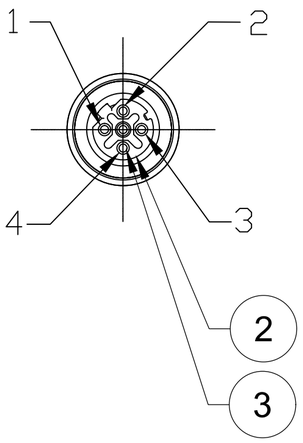

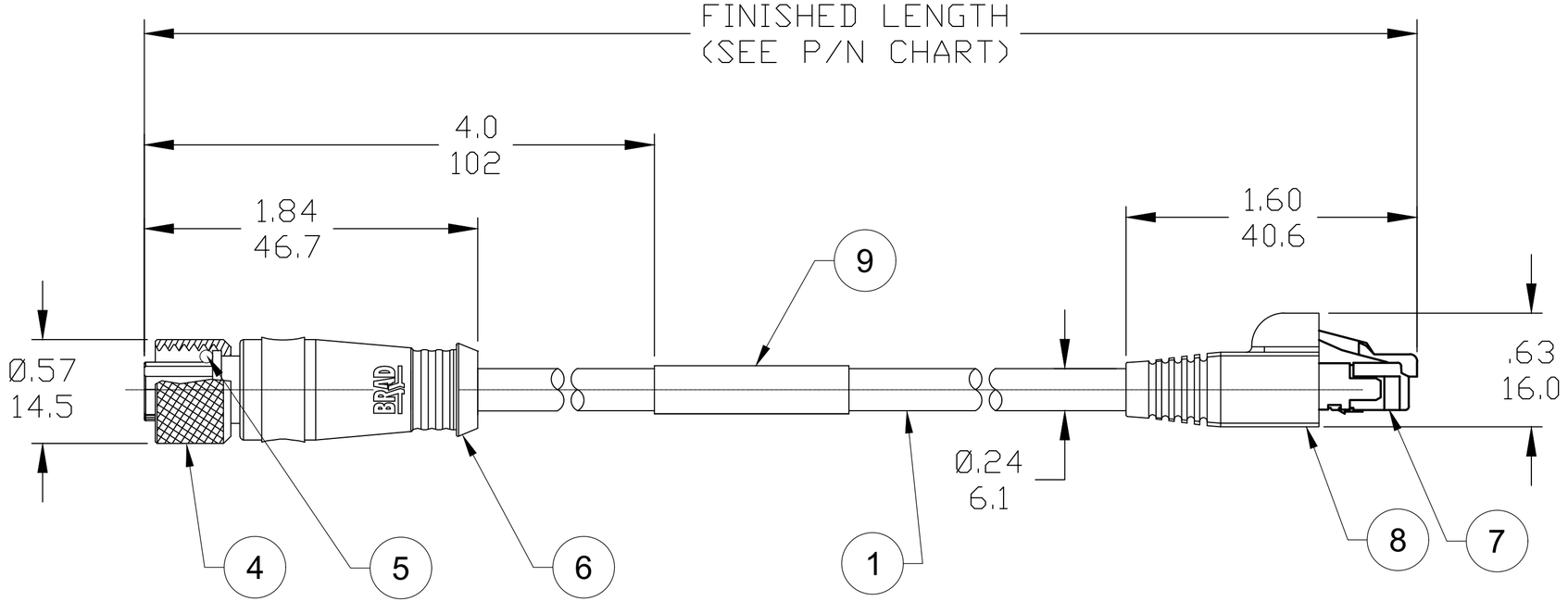

FACE VIEW RJ-45

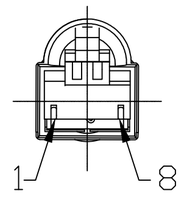

BOTTOM VIEW

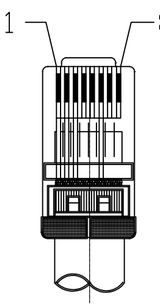

RJ45 WIRING

1 - WHITE/ORANGE
2 - ORANGE
3 - WHITE/GREEN
4 - N/C
5 - N/C
6 - GREEN
7 - N/C
8 - N/C

NOTES:
1. MATERIAL: AS NOTED
2. FINISH: AS NOTED
3. ELECTRICAL:
   VOLTAGE: 125V
   CURRENT: 1.5A
4. TEMP RATING: -25°C TO +105°C
5. PROTECTION: IP67 (WHEN MATED)
6. COUPLING THREAD: M12 X 1.0
7. ALL DIMS ARE FOR REFERENCE UNLESS TOLERANCED OR NOTED OTHERWISE

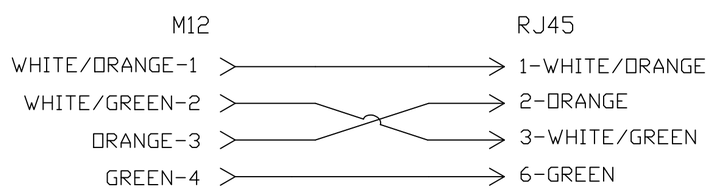

WIRING DIAGRAM

ITEM	DESCRIPTION	MATERIAL	FINISH
9	WRAP LABEL	VINYL	BLACK/YELLOW
8	RJ-45 BOOT	PVC	BLACK
7	RJ-45 PLUG	PC, PHOS-BRNZ	CLEAR, GOLD PLATE CONTACT
6	OVERMOLD	PUR	BLACK
5	O-RING	VITON	RED
4	COUPLING NUT	BRASS	NICKEL PLATED
3	CONTACT SOCKET	COPPER ALLOY	GOLD PLATED
2	FEMALE INSERT, 4P	PUR	BLACK
1	#24-4 TEAL ETHERNET CAT5E	TPE JACKET	TEAL

DOCUMENT STATUS	P1	RELEASE DATE	2019/08/20 19:49:26

SYMBOLS
FA = 0
FC = 0
FD = 0
S = 0
▼ = 0
C = 0
☒ = 0
■ = 0
V = 0

THIS DRAWING CONTAINS INFORMATION THAT IS PROPRIETARY TO MOLEX ELECTRONIC TECHNOLOGIES, LLC AND SHOULD NOT BE USED WITHOUT WRITTEN PERMISSION

DIMENSION UNITS: INCH/MM
SCALE: 1:1

GENERAL TOLERANCES (UNLESS SPECIFIED)

	mm	INCH
4 PLACES	±----	±----
3 PLACES	±----	±----
2 PLACES	±----	±----
1 PLACE	±----	±----
0 PLACES	±----	±----
ANGULAR TOL ±	---- °	

DRAFT WHERE APPLICABLE MUST REMAIN WITHIN DIMENSIONS

CURRENT REV DESC: RELEASED

EC NO: 622338
DRWN: RSTONE 2019/08/13
CHK'D: CCHRASTKA 2019/08/14
APPR: BWOODMAN 2019/08/20

INITIAL REVISION:
DRWN: RSTONE 2019/08/13
APPR: BWOODMAN 2019/08/20

THIRD ANGLE PROJECTION | DRAWING: C-SIZE | SERIES: 120108

molex

M12/RJ45 CABLE ASSY, 24AWG UNSHLD TPE

PRODUCT CUSTOMER DRAWING

DOCUMENT NUMBER	DOC TYPE	DOC PART	REVISION
1201080183	PSD	000	A

MATERIAL NUMBER	CUSTOMER	SHEET NUMBER
SEE P/N CHART	----	1 OF 1

FORMAT: ACAD-tb-prod-C
REVISION: A1
DATE: 2019/06/12