8 – 36V_{IN}, 15A ZVS Buck Regulator

Product Description

The PI33xx-x1 is a family of high-efficiency, wide-input-range DC-DC ZVS Buck regulators integrating controller, power switches and support components all within a high-density System-in-Package (SiP). The integration of a high performance Zero-Voltage Switching (ZVS) topology, within the PI33xx-x1 series increases point of load performance providing best-in-class power efficiency. The PI33xx-x1 requires only an external inductor and minimal capacitors to form a complete DC-DC switching mode Buck Regulator.

Device	Output Voltage		I_{OUT} Max
	Set	Range	
PI3311-x1-LGIZ	1.0V	1.0 – 1.4V	15A
PI3318-x1-LGIZ	1.8V	1.4 – 2.0V	15A
PI3312-x1-LGIZ	2.5V	2.0 – 3.1V	15A
PI3301-21-LGIZ [a]	3.3V	2.3 – 4.1V	15A

Table 1 – *PI33xx-x1 portfolio*

The ZVS architecture also enables high-frequency operation while minimizing switching losses and maximizing efficiency. The high switching frequency operation reduces the size of the external filtering components, improves power density, and enables very fast dynamic response to line and load transients. The PI33xx-x1 series sustains high switching frequency all the way up to the rated input voltage without sacrificing efficiency and, with its 20ns minimum on-time, supports large step-down conversions up to 36V_{IN}.

Features & Benefits

- High-efficiency ZVS Buck topology
- Wide input voltage range of 8 – 36V
- Very fast transient response
- High-accuracy pre-trimmed output voltage
- User-adjustable soft start & tracking
- Power-up into pre-biased load (select versions)
- Parallel capable with single wire current sharing
- Input Over / Undervoltage Lockout (OVLO/UVLO)
- Output Overvoltage Protection (OVP)
- Overtemperature Protection (OTP)
- Fast and slow current limits
- –40°C to 125°C operating range (T_J)
- Optional I^2C™ functionality & programmability [a]
  - V_{OUT} margining
  - Fault reporting
  - Enable and SYNCI pin polarity
  - Phase delay (interleaving multiple regulators)

Applications

- High-Efficiency Systems
- Computing, Communications, Industrial, Automotive Equipment
- High-Voltage Battery Operation

Package Information

- 10 x 14 x 2.6mm LGA SiP

[a] I^2C functionality is now standard when purchased as PI3301-00-LGIZ. See PI33xx-0x data sheet.

Contents

Order Information 3
Absolute Maximum Ratings 4
Functional Block Diagram 4
Pin Description 5
Package Pin-Out 5
PI3311-x1-LGIZ (1.0V_{OUT}) Electrical Characteristics 6
PI3318-x1-LGIZ (1.8V_{OUT}) Electrical Characteristics 9
PI3312-x1-LGIZ (2.5V_{OUT}) Electrical Characteristics 12
PI3301-21-LGIZ (3.3V_{OUT}) Electrical Characteristics 15
Functional Description 18
- ENABLE (EN) 18
- Remote Sensing 18
- Switching Frequency Synchronization 18
- Soft Start 18
- Output Voltage Trim 18
- Output Current Limit Protection 19
- Input Undervoltage Lockout 19
- Input Overvoltage Lockout 19
- Output Overvoltage Protection 19
- Overtemperature Protection 19
- Pulse Skip Mode (PSM) 19
- Variable Frequency Operation 19
- Parallel Operation 20
- I^2C Interface Operation 20

Application Description 21
- Output Voltage Trim 21
- Soft Start Adjust and Tracking 22
- Inductor Pairing 22

Layout Guidelines 23
Recommended PCB Footprint and Stencil 24
LGIZ Package Drawing 25
Revision History 26
Product Warranty 27

Order Information

Part Number	Output Range		I_{OUT} Max	Package	Transport Media
	Set	Range			
PI3311-01-LGIZ	1.0V	1.0 – 1.4V	15A	10 x 14mm 123-pin LGA	TRAY
PI3318-01-LGIZ	1.8V	1.4 – 2.0V	15A	10 x 14mm 123-pin LGA	TRAY
PI3312-01-LGIZ	2.5V	2.0 – 3.1V	15A	10 x 14mm 123-pin LGA	TRAY

I²C™ Functionality & Programmability

Part Number	Output Range		I_{OUT} Max	Package	Transport Media
	Set	Range			
PI3311-21-LGIZ	1.0V	1.0 – 1.4V	15A	10 x 14mm 123-pin LGA	TRAY
PI3318-21-LGIZ	1.8V	1.4 – 2.0V	15A	10 x 14mm 123-pin LGA	TRAY
PI3312-21-LGIZ	2.5V	2.0 – 3.1V	15A	10 x 14mm 123-pin LGA	TRAY
PI3301-21-LGIZ	3.3V	2.3 – 4.1V	15A	10 x 14mm 123-pin LGA	TRAY

Absolute Maximum Ratings

Name		Rating
VIN		–0.7 to 36V
VS1		–0.7 to $36V_{DC}$
SGND		100mA
PGD, SYNCO, SYNCI, EN, EAO, ADJ, TRK, ADR1, ADR2, SCL, SDA		–0.3 to 5.5V / 5mA
VOUT , REM	PI3311-x1-LGIZ	–0.3 to 5.5V
	PI3318-x1-LGIZ	–0.5 to 9V
	PI3312-x1-LGIZ	–0.8 to 13V
	PI3301-21-LGIZ	–1.0 to 18V
Storage Temperature		–65 to 150°C
Operating Junction Temperature		–40 to 125°C
Soldering Temperature for 20 seconds		245°C
ESD Rating		2kV HBM

Notes: At 25°C ambient temperature. Stresses beyond these limits may cause permanent damage to the device. Operation at these conditions or conditions beyond those listed in the Electrical Specifications table is not guaranteed. All voltage nodes are referenced to PGND unless otherwise noted.
Test conditions are per the specifications within the individual product electrical characteristics.

Functional Block Diagram

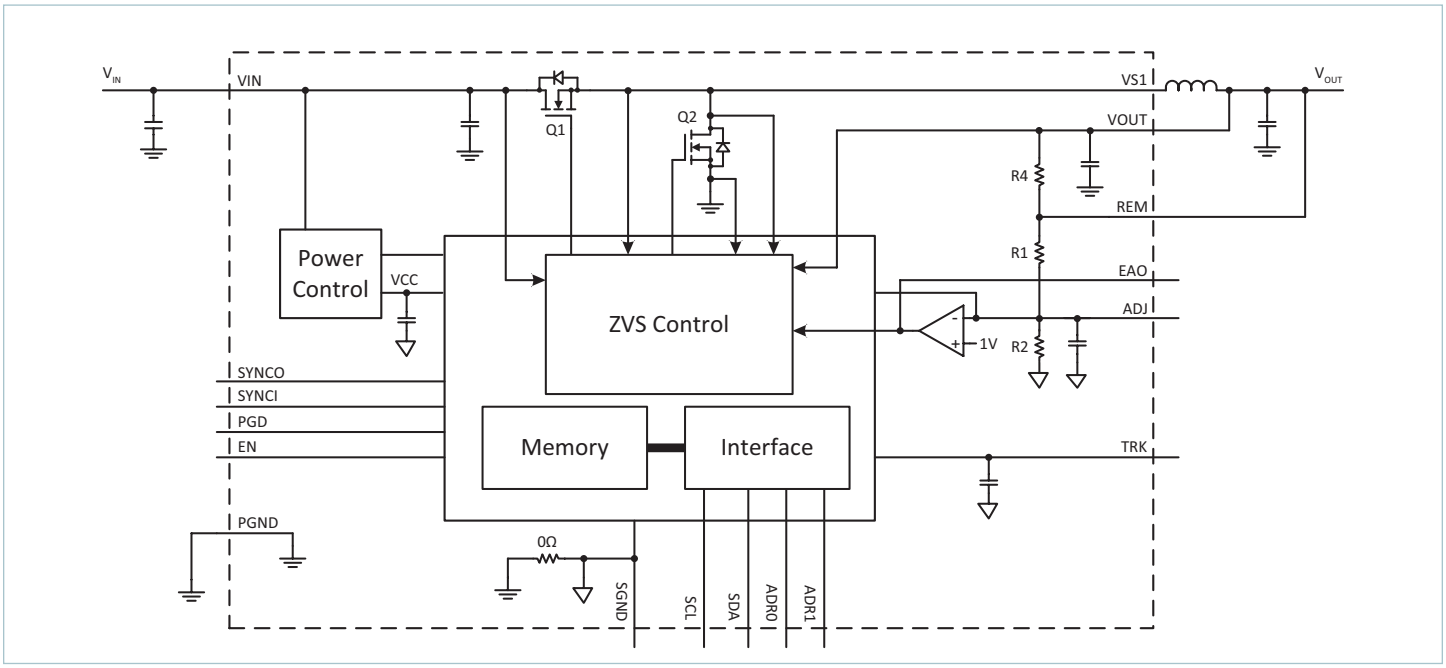

Simplified block diagram (I²C™ pins SCL, SDA, ADR0, and ADR1 only active for PI33xx-21 device versions)

Pin Description

Pin Name	Number	Description
SGND	Block 1	**Signal Ground:** Internal logic ground for EA, TRK, SYNCI, SYNCO, ADJ and I²C™ (options) communication returns. SGND and PGND are star connected within the regulator package.
PGND	Block 2	**Power Ground:** VIN and VOUT power returns.
VIN	Block 3	**Input Voltage:** and sense for UVLO, OVLO and feed forward ramp.
VOUT	Block 5	**Output Voltage:** and sense for power switches and feed-forward ramp.
VS1	Block 4	**Switching Node**: and ZVS sense for power switches.
PWRGD	A1	**Parallel Good:** Used for parallel timing management intended for lead regulator.
EAO	A2	**Error Amp Output:** External connection for additional compensation and current sharing.
EN	A3	**Enable Input:** Regulator enable control. Asserted high or left floating – regulator enabled; Asserted low, regulator output disabled. Polarity is programmable via I²C interface.
REM	A5	**Remote Sense:** High-side connection. Connect to output regulation point.
ADJ	B1	**Adjust Input:** An external resistor may be connected between ADJ pin and SGND or VOUT to trim the output voltage up or down.
TRK	C1	**Soft Start and Track Input:** An external capacitor may be connected between TRK pin and SGND to decrease the rate of rise during soft start.
NC	A4	**No Connect:** Leave pins floating.
VDR	K3	VDR can only be used for ADR0 and ADR1 pull up reference voltage. No other external loading is permitted.
SYNCO	K4	**Synchronization Output:** Outputs a low signal for ½ of the minimum period for synchronization of other converters.
SYNCI	K5	**Synchronization Input:** Synchronize to the falling edge of external clock frequency. SYNCI is a high-impedance digital input node and should always be connected to SGND when not in use.
SDA	D1	**Data Line:** Connect to SGND for PI33xx-01 and PI33xx-11. For use with PI33xx-21 only.
SCL	E1	**Clock Line:** Connect to SGND for PI33xx-01. For use with PI33xx-21 only.
ADR1	H1	**Tri-state Address:** No connect for PI33xx-01. For use with PI33xx-21 only.
ADR0	G1	**Tri-state Address:** No connect for PI33xx-01. For use with PI33xx-21 only.

Package Pinout

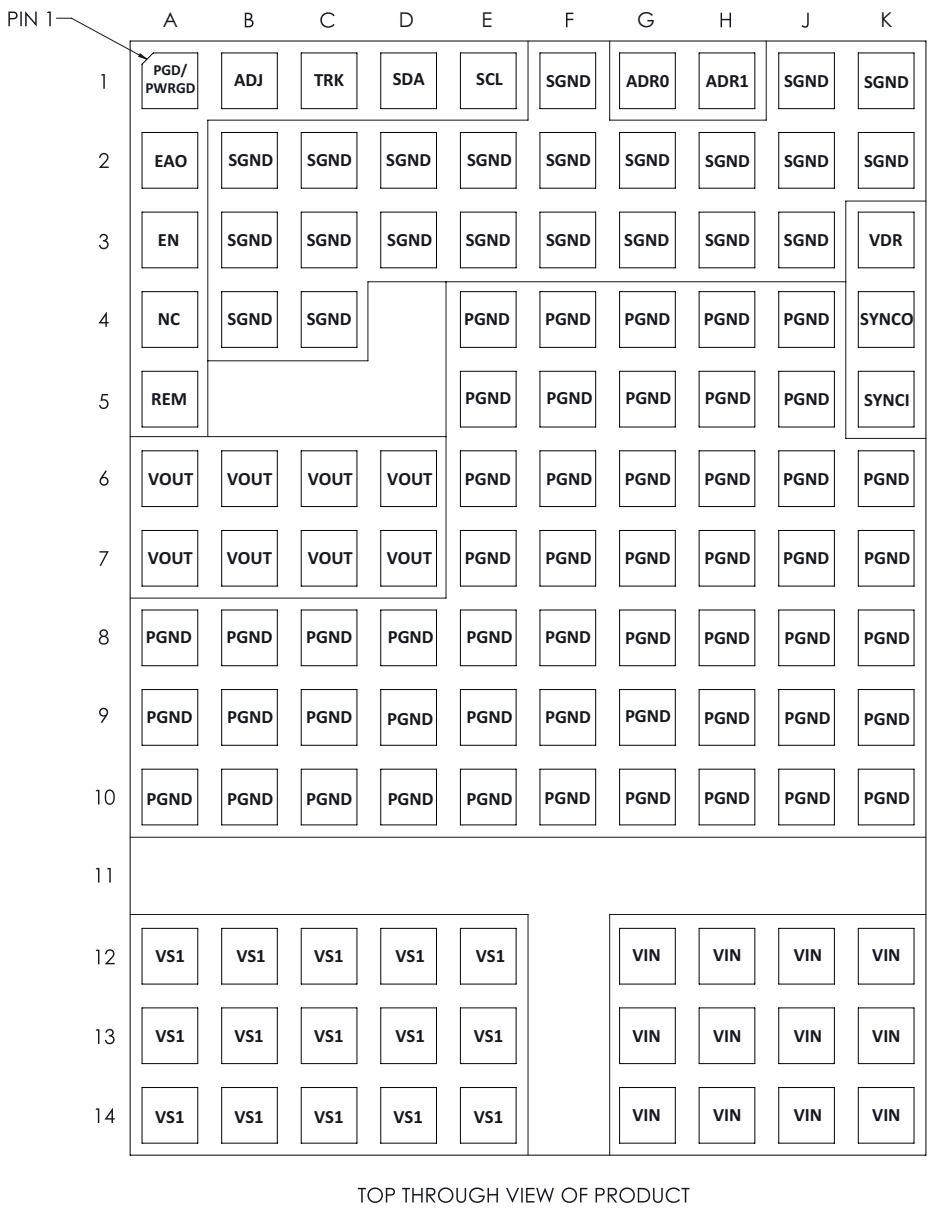

Pin Block Name	Group of pins
SGND	B2-4, C2-4, D2-3, E2-3, F1-3, G2-3, H2-3, J1-3, K1-2
PGND	A8-10, B8-10, C8-10, D8-10, E4-10, F4-10, G4-10, H4-10, J4-10, K6-10
VIN	G12-14, H12-14, J12-14, K12-14
VS1	A12-14, B12-14, C12-14, D12-14, E12-14
VOUT	A6-7, B6-7, C6-7, D6-7

PI3311-x1-LGIZ (1.0V_{OUT}) Electrical Characteristics

Unless otherwise specified: –40°C < T_J < 125°C, V_{IN} = 24V, L1 = 85nH [b]

Parameter	Symbol	Conditions	Min	Typ	Max	Unit
Input Specifications						
Input Voltage	V_{IN_DC}	Minimum 1mA load required	8	24	36	V
Input Current	I_{IN_DC}	V_{IN} = 24V, T_C = 25°C, I_{OUT} =15A		740		mA
Input Current At Output Short (fault condition duty cycle)	I_{IN_Short}	[c]			25	mA
Input Quiescent Current	I_{Q_VIN}	Disabled		2.0		mA
		Enabled (no load)		2.5		mA
Input Voltage Slew Rate	V_{IN_SR}				1	V/µs
Output Specifications						
Output Voltage Total Regulation	V_{OUT_DC}	[c]	0.987	1.0	1.013	V
Output Voltage Trim Range	V_{OUT_DC}	[d]	1.0		1.4	V
Line Regulation	ΔV_{OUT} (ΔV_{IN})	@25°C, 8V < V_{IN} < 36V		0.10		%
Load Regulation	ΔV_{OUT} (ΔI_{OUT})	@25°C, 0.5A < I_{OUT} < 15A		0.10		%
Output Voltage Ripple	V_{OUT_AC}	I_{OUT} = 5A, C_{OUT} = 8 x 100µF, 20MHz BW [e]		45		mV_{P-P}
Continuous Output Current Range	I_{OUT_DC}	[f]	0.001		15	A
Current Limit	I_{OUT_CL}			18.0		A
Protection						
V_{IN} UVLO Start Threshold	V_{UVLO_START}		7.10	7.60	8.00	V
V_{IN} UVLO Stop Threshold	V_{UVLO_STOP}		6.80	7.25	7.60	V
V_{IN} UVLO Hysteresis	V_{UVLO_HYS}			0.35		V
V_{IN} OVLO Start Threshold	V_{OVLO_START}		36.1	37.6		V
V_{IN} OVLO Stop Threshold	V_{OVLO_STOP}		37.0	38.4		V
V_{IN} OVLO Hysteresis	V_{OVLO_HYS}			0.8		V
V_{IN} UVLO/OVLO Fault Delay Time	t_{f_DLY}	Number of the switching frequency cycles			128	Cycles
V_{IN} UVLO/OVLO Response Time	t_f			500		ns
Output Overvoltage Protection	V_{OVP}	Above V_{OUT}		20		%
Overtemperature Fault Threshold	T_{OTP}	[c]	130	135	140	°C
Overtemperature Restart Hysteresis	T_{OTP_HYS}			30		°C

[b] All parameters reflect regulator and inductor system performance. Measurements were made using a standard PI33xx evaluation board with 3x4" dimensions and 4 layer, 2oz copper. Refer to inductor pairing table within Application Description section for specific inductor manufacturer and value.
[c] Regulator is assured to meet performance specifications by design, test correlation, characterization, and/or statistical process control.
[d] Output current capability may be limited and other performance may vary from electrical characteristics when switching frequency or V_{OUT} is modified.
[e] Refer to Output Ripple plots.
[f] Refer to Load Current vs. Ambient Temperature curves.
[g] Refer to Switching Frequency vs. Load current curves.

PI3311-x1-LGIZ (1.0V_{OUT}) Electrical Characteristics (Cont.)

Unless otherwise specified: –40°C < T_J < 125°C, V_{IN} = 24V, L1 = 85nH [b]

Parameter	Symbol	Conditions	Min	Typ	Max	Unit
Timing						
Switching Frequency	f_S	[g]		500		kHz
Fault Restart Delay	t_{FR_DLY}			30		ms
Sync In (SYNCI)						
Synchronization Frequency Range	Δf_{SYNCI}	Relative to set switching frequency [d]	50		110	%
SYNCI Threshold	V_{SYNCI}			2.5		V
Sync Out (SYNCO)						
SYNCO High	V_{SYNCO_HI}	Source 1mA	4.5			V
SYNCO Low	V_{SYNCO_LO}	Sink 1mA			0.5	V
SYNCO Rise Time	t_{SYNCO_RT}	20pF load		10		ns
SYNCO Fall Time	t_{SYNCO_FT}	20pF load		10		ns
Soft Start And Tracking						
TRK Active Input Range	V_{TRK}	Internal reference tracking range	0		1.04	V
TRK Max Output Voltage	V_{TRK_MAX}			1.2		V
TRK Disable Threshold	V_{TRK_OV}		20	40	60	mV
Charge Current (Soft Start)	I_{TRK}		–70	–50	–30	µA
Discharge Current (Fault)	I_{TRK_DIS}			6.8		mA
Soft-Start Time	t_{SS}	C_{TRK} = 0µF		2.2		ms
Enable						
High Threshold	V_{EN_HI}		0.9	1	1.1	V
Low Threshold	V_{EN_LO}		0.7	0.8	0.9	V
Threshold Hysteresis	V_{EN_HYS}		100	200	300	mV
Enable Pull-Up Voltage (floating, unfaulted)	V_{EN_PU}	With positive logic EN polarity		2		V
Enable Pull-Down Voltage (floating, faulted)	V_{EN_PD}	With negative logic EN polarity		0		V
Source Current	I_{EN_SO}	With positive logic EN polarity		–50		µA
Sink Current	I_{EN_SK}	With negative logic EN polarity		50		µA

[b] All parameters reflect regulator and inductor system performance. Measurements were made using a standard PI33xx evaluation board with 3x4" dimensions and 4 layer, 2oz copper. Refer to inductor pairing table within Application Description section for specific inductor manufacturer and value.
[c] Regulator is assured to meet performance specifications by design, test correlation, characterization, and/or statistical process control.
[d] Output current capability may be limited and other performance may vary from electrical characteristics when switching frequency or V_{OUT} is modified.
[e] Refer to Output Ripple plots.
[f] Refer to Load Current vs. Ambient Temperature curves.
[g] Refer to Switching Frequency vs. Load current curves.

PI3311-x1-LGIZ (1.0V_{OUT}) Electrical Characteristics (Cont.)

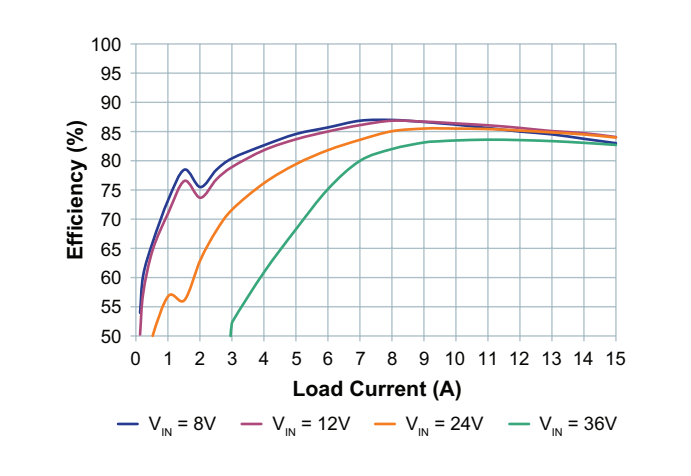

Figure 1 *— Efficiency at 25°C*

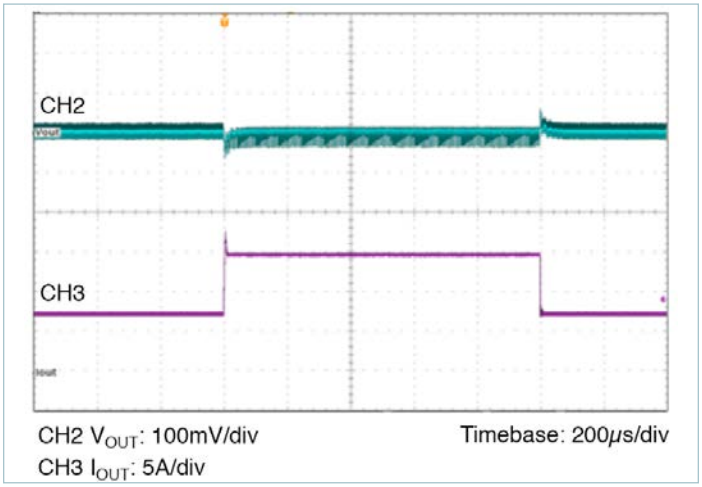

Figure 4 *— Transient response 7.5A to 15A, at 5A/µs; 24V_{IN} to 1.0V_{OUT}, C_{OUT} = 8 x 100µF ceramic*

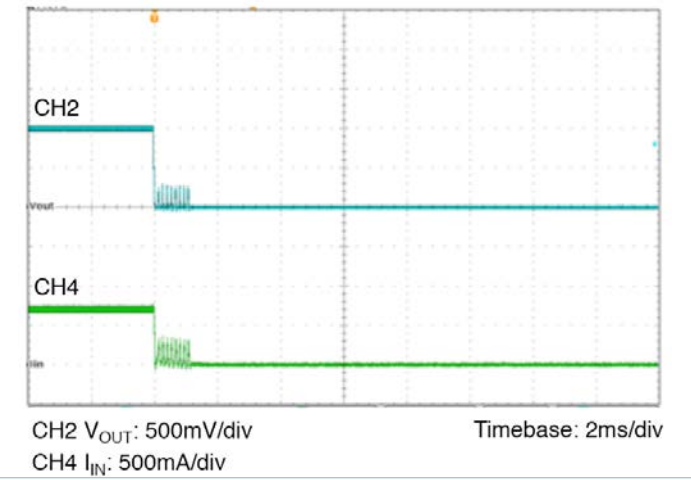

Figure 2 *— Short circuit test*

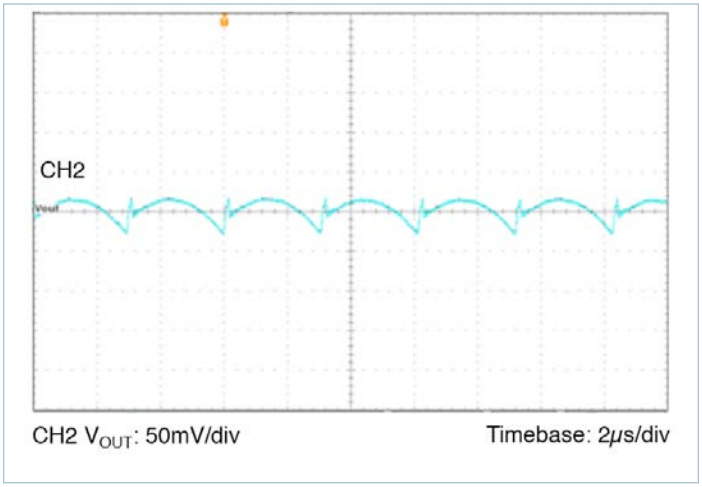

Figure 5 *— Output ripple 24V_{IN}, 1.0V_{OUT} at 15A; C_{OUT} = 8 x 100µF ceramic*

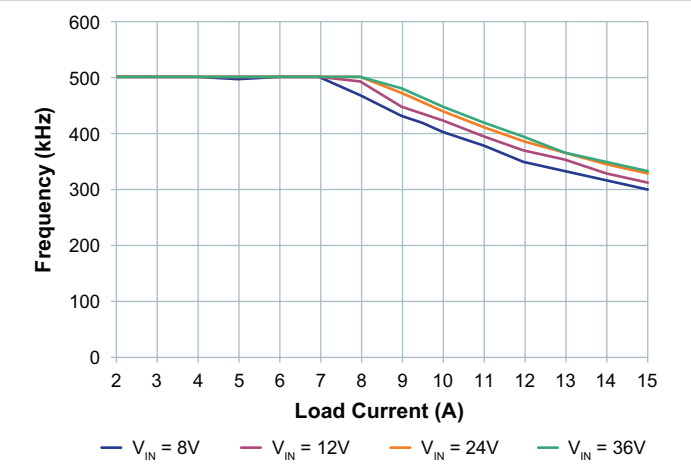

Figure 3 *— Switching frequency vs. load current*

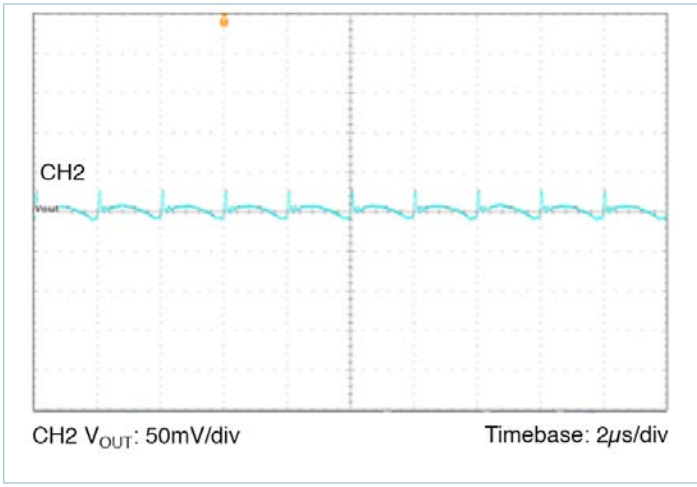

Figure 6 *— Output ripple 24V_{IN}, 1.0V_{OUT} at 7A; C_{OUT} = 8 x 100µF ceramic*

PI3318-x1-LGIZ (1.8V_{OUT}) Electrical Characteristics

Unless otherwise specified: –40°C < T_J < 125°C, V_{IN} = 24V, L1 = 125nH [b]

Parameter	Symbol	Conditions	Min	Typ	Max	Unit
Input Specifications						
Input Voltage	V_{IN_DC}		8	24	36	V
Input Current	I_{IN_DC}	V_{IN} = 24V, T_C = 25°C, I_{OUT} =10A		835		A
Input Current At Output Short (fault condition duty cycle)	I_{IN_Short}	[c]			20	mA
Input Quiescent Current	I_{Q_VIN}	Disabled		2.0		mA
		Enabled (no load)		2.5		
Input Voltage Slew Rate	V_{IN_SR}	[c]			1	V / µs
Output Specifications						
Output Voltage Total Regulation	V_{OUT_DC}	[c]	1.773	1.8	1.827	V
Output Voltage Trim Range	V_{OUT_DC}	[d]	1.4		2.0	V
Line Regulation	ΔV_{OUT} (ΔV_{IN})	@25°C, 8V < V_{IN} < 36V		0.10		%
Load Regulation	ΔV_{OUT} (ΔI_{OUT})	@25°C, 0.5A < I_{OUT} < 15A		0.10		%
Output Voltage Ripple	V_{OUT_AC}	I_{OUT} = 5A, C_{OUT} = 6 x 100µF, 20MHz BW [e]		30		mV_{P-P}
Continuous Output Current Range	I_{OUT_DC}	[f]	0		15	A
Current Limit	I_{OUT_CL}			18.0		A
Protection						
V_{IN} UVLO Start Threshold	V_{UVLO_START}		7.10	7.60	8.00	V
V_{IN} UVLO Stop Threshold	V_{UVLO_STOP}		6.80	7.25	7.60	V
V_{IN} UVLO Hysteresis	V_{UVLO_HYS}			0.35		V
V_{IN} OVLO Start Threshold	V_{OVLO_START}		36.1	37.6		V
V_{IN} OVLO Stop Threshold	V_{OVLO_STOP}		37.0	38.4		V
V_{IN} OVLO Hysteresis	V_{OVLO_HYS}			0.8		V
V_{IN} UVLO/OVLO Fault Delay Time	t_{f_DLY}	Number of the switching frequency cycles			128	Cycles
V_{IN} UVLO/OVLO Response Time	t_f			500		ns
Output Overvoltage Protection	V_{OVP}	Above V_{OUT}		20		%
Overtemperature Fault Threshold	T_{OTP}	[c]	130	135	140	°C
Overtemperature Restart Hysteresis	T_{OTP_HYS}			30		°C

[b] All parameters reflect regulator and inductor system performance. Measurements were made using a standard PI33xx evaluation board with 3x4" dimensions and 4 layer, 2oz copper. Refer to inductor pairing table within Application Description section for specific inductor manufacturer and value.
[c] Regulator is assured to meet performance specifications by design, test correlation, characterization, and/or statistical process control.
[d] Output current capability may be limited and other performance may vary from electrical characteristics when switching frequency or V_{OUT} is modified.
[e] Refer to Output Ripple plots.
[f] Refer to Load Current vs. Ambient Temperature curves.
[g] Refer to Switching Frequency vs. Load current curves.

PI3318-x1-LGIZ (1.8V_{OUT}) Electrical Characteristics (Cont.)

Unless otherwise specified: –40°C < T_J < 125°C, V_{IN} =24V, L1 = 125nH [b]

Parameter	Symbol	Conditions	Min	Typ	Max	Unit
Timing						
Switching Frequency	f_S	[g]		550		kHz
Fault Restart Delay	t_{FR_DLY}			30		ms
Sync In (SYNCI)						
Synchronization Frequency Range	Δf_{SYNCI}	Relative to set switching frequency [d]	50		110	%
SYNCI Threshold	V_{SYNCI}			2.5		V
Sync Out (SYNCO)						
SYNCO High	V_{SYNCO_HI}	Source 1mA	4.5			V
SYNCO Low	V_{SYNCO_LO}	Sink 1mA			0.5	V
SYNCO Rise Time	t_{SYNCO_RT}	20pF load		10		ns
SYNCO Fall Time	t_{SYNCO_FT}	20pF load		10		ns
Soft Start And Tracking						
TRK Active Input Range	V_{TRK}	Internal reference tracking range	0		1.04	V
TRK Max Output Voltage	V_{TRK_MAX}			1.2		V
TRK Disable Threshold	V_{TRK_OV}		20	40	60	mV
Charge Current (Soft Start)	I_{TRK}		–70	–50	–30	µA
Discharge Current (Fault)	I_{TRK_DIS}			6.8		mA
Soft-Start Time	t_{SS}	C_{TRK} = 0µF		2.2		ms
Enable						
High Threshold	V_{EN_HI}		0.9	1	1.1	V
Low Threshold	V_{EN_LO}		0.7	0.8	0.9	V
Threshold Hysteresis	V_{EN_HYS}		100	200	300	mV
Enable Pull-Up Voltage (floating, unfaulted)	V_{EN_PU}			2		V
Enable Pull-Down Voltage (floating, faulted)	V_{EN_PD}			0		V
Source Current	I_{EN_SO}			–50		µA
Sink Current	I_{EN_SK}			50		µA

[b] All parameters reflect regulator and inductor system performance. Measurements were made using a standard PI33xx evaluation board with 3x4" dimensions and 4 layer, 2oz copper. Refer to inductor pairing table within Application Description section for specific inductor manufacturer and value.
[c] Regulator is assured to meet performance specifications by design, test correlation, characterization, and/or statistical process control.
[d] Output current capability may be limited and other performance may vary from electrical characteristics when switching frequency or V_{OUT} is modified.
[e] Refer to Output Ripple plots.
[f] Refer to Load Current vs. Ambient Temperature curves.
[g] Refer to Switching Frequency vs. Load current curves.

PI3318-x1-LGIZ (1.8V_{OUT}) Electrical Characteristics (Cont.)

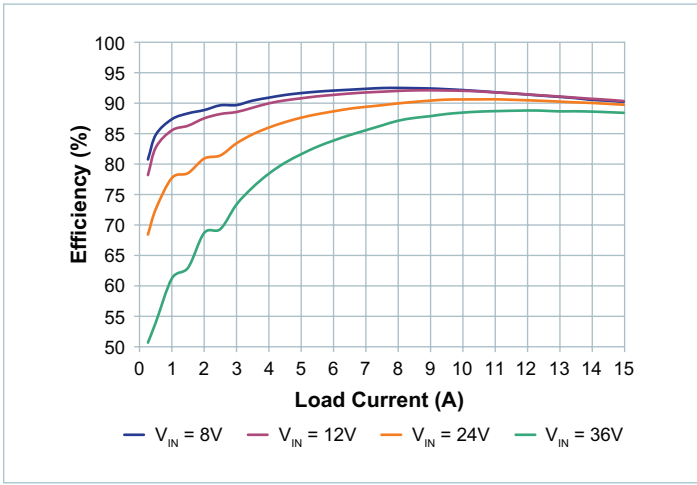

Figure 7 *— Efficiency at 25°C*

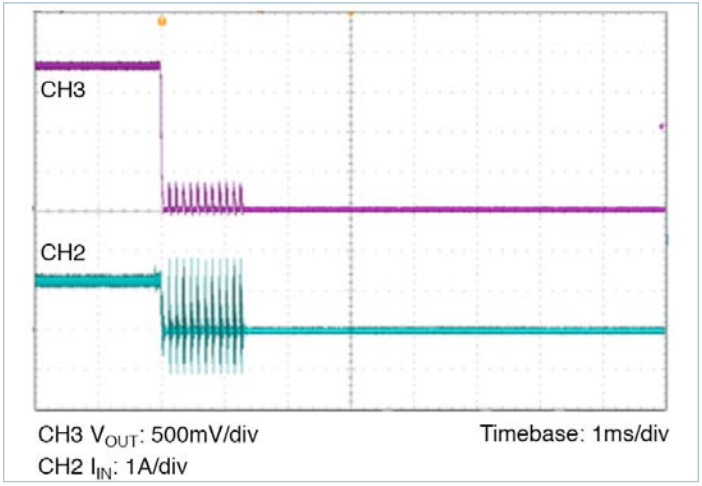

Figure 8 *— Short circuit test*

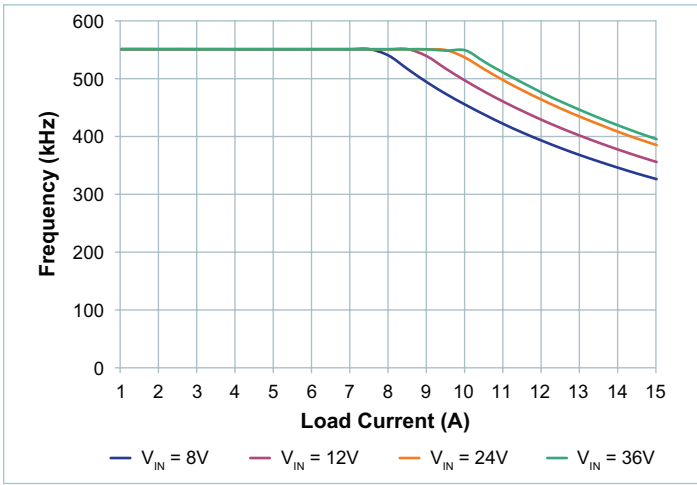

Figure 9 *— Switching frequency vs. load current*

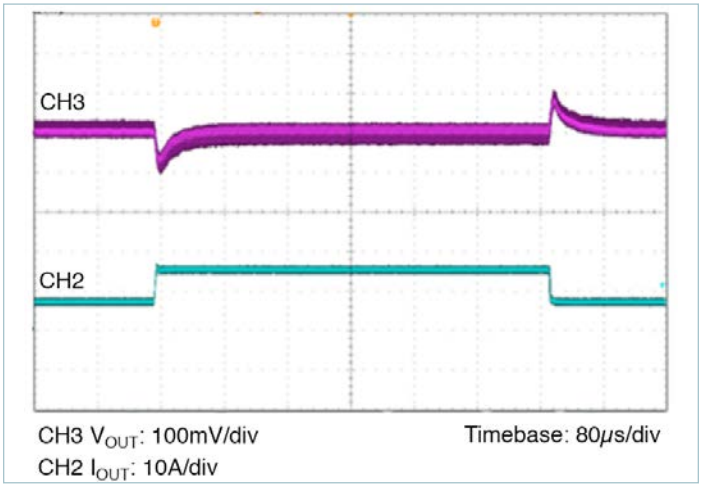

Figure 10 *— Transient response 7A to 15A, at 5A/µs; 24V_{IN} to 1.8V_{OUT}, C_{OUT} = 8 x 100µF ceramic*

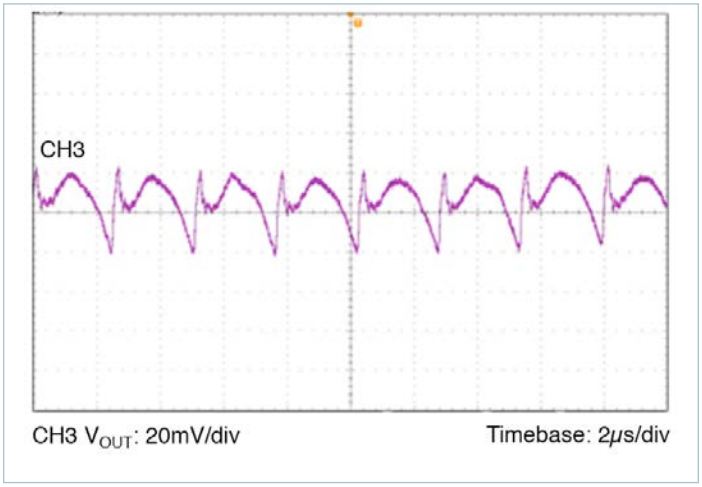

Figure 11 *— Output ripple 24V_{IN}, 1.8V_{OUT} at 15A; C_{OUT} = 8 x 100µF ceramic*

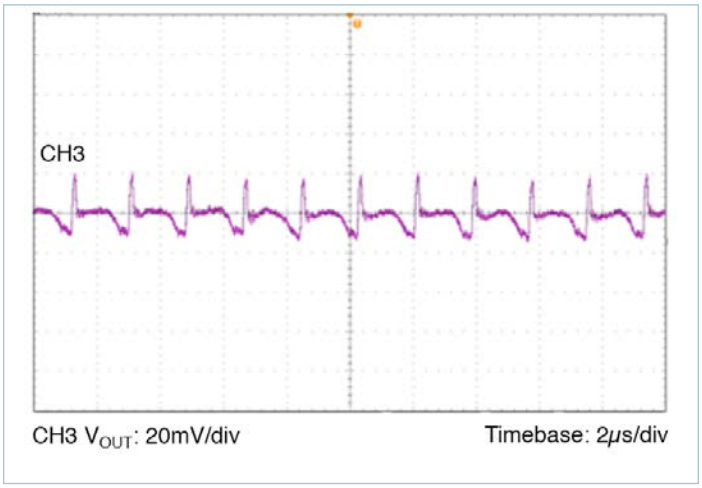

Figure 12 *— Output ripple 24V_{IN}, 1.8V_{OUT} at 7.5A; C_{OUT} = 8 x 100µF ceramic*

PI3312-x1-LGIZ (2.5V_{OUT}) Electrical Characteristics

Unless otherwise specified: –40°C < T_J < 125°C, V_{IN} = 24V, L1 = 125nH [b]

Parameter	Symbol	Conditions	Min	Typ	Max	Unit
Input Specifications						
Input Voltage	V_{IN_DC}	[h]	8	24	36	V
Input Current	I_{IN_DC}	V_{IN} = 24V, T_C = 25°C, I_{OUT} = 15A		1.7		A
Input Current At Output Short (fault condition duty cycle)	I_{IN_Short}	[c]			60	mA
Input Quiescent Current	I_{Q_VIN}	Disabled		2.0		mA
		Enabled (no load)		2.5		
Input Voltage Slew Rate	V_{IN_SR}				1	V / µs
Output Specifications						
Output Voltage Total Regulation	V_{OUT_DC}	[c]	2.465	2.500	2.535	V
Output Voltage Trim Range	V_{OUT_DC}	[d] [h]	2.0	2.5	3.1	V
Line Regulation	ΔV_{OUT} (ΔV_{IN})	@25°C, 8V < V_{IN} < 36V		0.10		%
Load Regulation	ΔV_{OUT} (ΔI_{OUT})	@25°C, 0.5A < I_{OUT} < 15A		0.10		%
Output Voltage Ripple	V_{OUT_AC}	I_{OUT} = 5A, C_{OUT} = 4 x 100µF, 20MHz BW [e]		28		mV_{P-P}
Continuous Output Current Range	I_{OUT_DC}	[f] [h]	0		15	A
Current Limit	I_{OUT_CL}			18.0		A
Protection						
V_{IN} UVLO Start Threshold	V_{UVLO_START}		7.10	7.60	8.00	V
V_{IN} UVLO Stop Threshold	V_{UVLO_STOP}		6.80	7.25	7.60	V
V_{IN} UVLO Hysteresis	V_{UVLO_HYS}			0.35		V
V_{IN} OVLO Start Threshold	V_{OVLO_START}		36.1	37.6		V
V_{IN} OVLO Stop Threshold	V_{OVLO_STOP}		37.0	38.4		V
V_{IN} OVLO Hysteresis	V_{OVLO_HYS}			0.8		V
V_{IN} UVLO/OVLO Fault Delay Time	t_{f_DLY}	Number of the switching frequency cycles			128	Cycles
V_{IN} UVLO/OVLO Response Time	t_f			500		ns
Output Overvoltage Protection	V_{OVP}	Above V_{OUT}		20		%
Overtemperature Fault Threshold	T_{OTP}	[c]	130	135	140	°C
Overtemperature Restart Hysteresis	T_{OTP_HYS}			30		°C

[b] All parameters reflect regulator and inductor system performance. Measurements were made using a standard PI33xx evaluation board with 3x4" dimensions and 4 layer, 2oz copper. Refer to inductor pairing table within Application Description section for specific inductor manufacturer and value.
[c] Regulator is assured to meet performance specifications by design, test correlation, characterization, and/or statistical process control.
[d] Output current capability may be limited and other performance may vary from electrical characteristics when switching frequency or V_{OUT} is modified.
[e] Refer to Output Ripple plots.
[f] Refer to Load Current vs. Ambient Temperature curves.
[g] Refer to Switching Frequency vs. Load current curves.
[h] Minimum 5V between V_{IN} – V_{OUT} must be maintained or a minimum load of 1mA required.

PI3312-x1-LGIZ (2.5V_{OUT}) Electrical Characteristics (Cont.)

Unless otherwise specified: –40°C < T_J < 125°C, V_{IN} = 24V, L1 = 125nH [b]

Parameter	Symbol	Conditions	Min	Typ	Max	Unit
Timing						
Switching Frequency	f_S	[g]		650		kHz
Fault Restart Delay	t_{FR_DLY}			30		ms
Sync In (SYNCI)						
Synchronization Frequency Range	Δf_{SYNCI}	Relative to set switching frequency [d]	50		110	%
SYNCI Threshold	V_{SYNCI}			2.5		V
Sync Out (SYNCO)						
SYNCO High	V_{SYNCO_HI}	Source 1mA	4.5			V
SYNCO Low	V_{SYNCO_LO}	Sink 1mA			0.5	V
SYNCO Rise Time	t_{SYNCO_RT}	20pF load		10		ns
SYNCO Fall Time	t_{SYNCO_FT}	20pF load		10		ns
Soft Start And Tracking						
TRK Active Input Range	V_{TRK}	Internal reference tracking range	0		1.04	V
TRK Max Output Voltage	V_{TRK_MAX}			1.2		V
TRK Disable Threshold	V_{TRK_OV}		20	40	60	mV
Charge Current (Soft Start)	I_{TRK}		–70	–50	–30	µA
Discharge Current (Fault)	I_{TRK_DIS}			6.8		mA
Soft-Start Time	t_{SS}	C_{TRK} = 0µF		2.2		ms
Enable						
High Threshold	V_{EN_HI}		0.9	1	1.1	V
Low Threshold	V_{EN_LO}		0.7	0.8	0.9	V
Threshold Hysteresis	V_{EN_HYS}		100	200	300	mV
Enable Pull-Up Voltage (floating, unfaulted)	V_{EN_PU}			2		V
Enable Pull-Down Voltage (floating, faulted)	V_{EN_PD}			0		V
Source Current	I_{EN_SO}			–50		µA
Sink Current	I_{EN_SK}			50		µA

[b] All parameters reflect regulator and inductor system performance. Measurements were made using a standard PI33xx evaluation board with 3x4" dimensions and 4 layer, 2oz copper. Refer to inductor pairing table within Application Description section for specific inductor manufacturer and value.
[c] Regulator is assured to meet performance specifications by design, test correlation, characterization, and/or statistical process control.
[d] Output current capability may be limited and other performance may vary from electrical characteristics when switching frequency or V_{OUT} is modified.
[e] Refer to Output Ripple plots.
[f] Refer to Load Current vs. Ambient Temperature curves.
[g] Refer to Switching Frequency vs. Load current curves.
[h] Minimum 5V between V_{IN} – V_{OUT} must be maintained or a minimum load of 1mA required.

PI3312-x1-LGIZ (2.5V_{OUT}) Electrical Characteristics (Cont.)

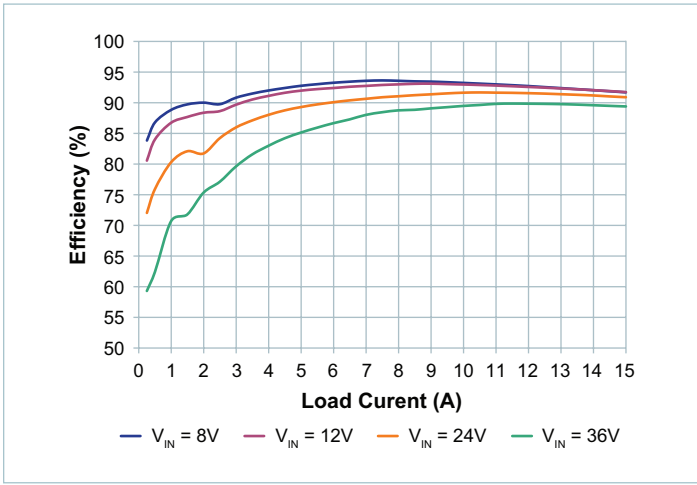

Figure 13 *— Efficiency at 25°C*

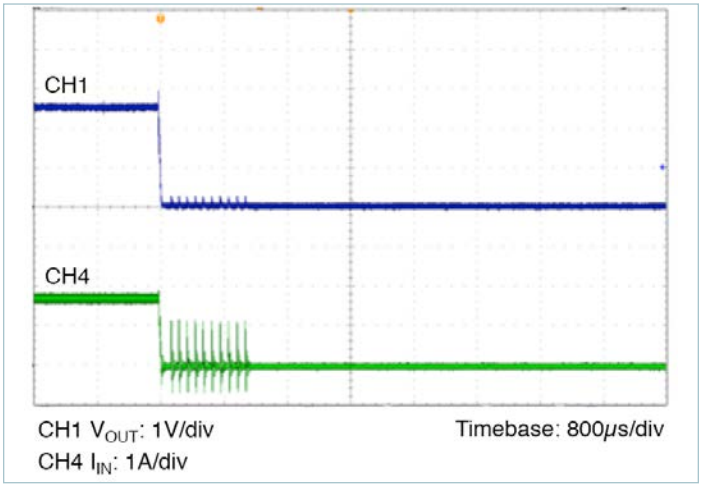

Figure 14 *— Short circuit test*

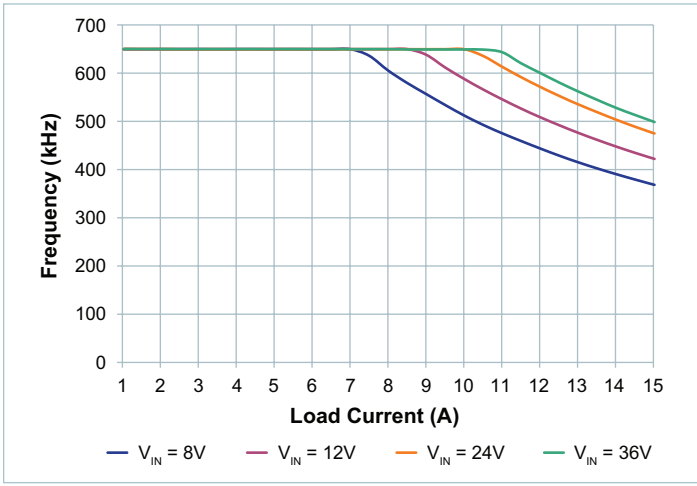

Figure 15 *— Switching frequency vs. load current*

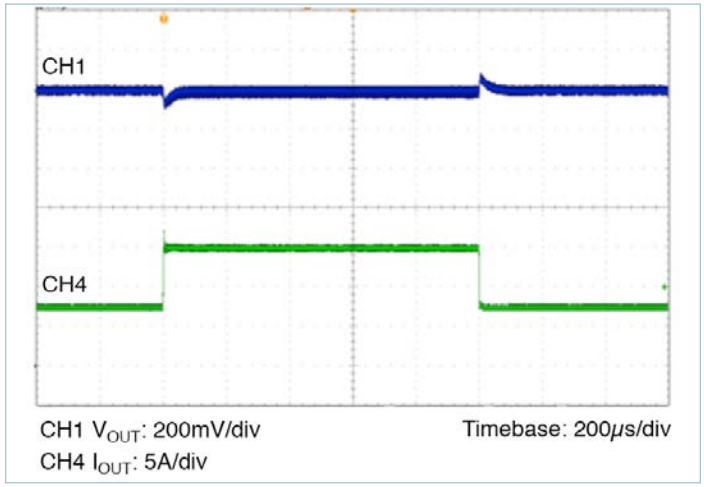

Figure 16 *— Transient response 7.5A to 15A, at 5A/µs; 24V_{IN} to 2.5V_{OUT}, C_{OUT} = 8 x 100µF ceramic*

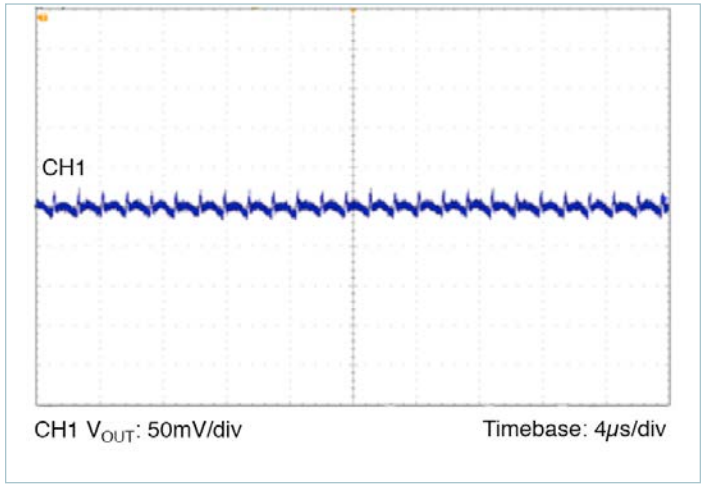

Figure 17 *— Output ripple 24V_{IN}, 2.5V_{OUT} at 15A C_{OUT} = 8 x 100µF ceramic*

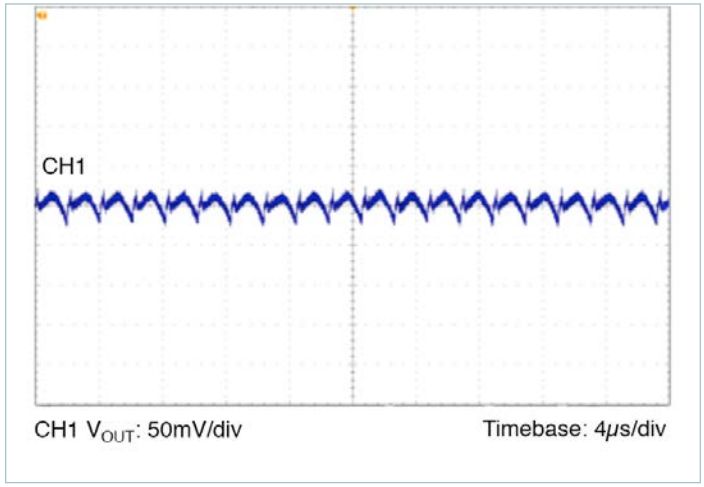

Figure 18 *— Output ripple 24V_{IN}, 2.5V_{OUT} at 7.5A C_{OUT} = 8 x 100µF ceramic*

PI3301-21-LGIZ (3.3V_{OUT}) Electrical Characteristics

Unless otherwise specified: –40°C < T_J < 125°C, V_{IN} = 24V, L1 = 155nH [b]

Parameter	Symbol	Conditions	Min	Typ	Max	Unit
Input Specifications						
Input Voltage	V_{IN_DC}	[h]	8	24	36	V
Input Current	I_{IN_DC}	V_{IN} = 24V, T_C = 25°C, I_{OUT} =15A		2.25		A
Input Current At Output Short (fault condition duty cycle)	I_{IN_Short}	[c]			75	mA
Input Quiescent Current	I_{Q_VIN}	Disabled		2.0		mA
		Enabled (no load)		2.5		
Input Voltage Slew Rate	V_{IN_SR}				1	V / µs
Output Specifications						
Output Voltage Total Regulation	V_{OUT_DC}	[c]	3.25	3.30	3.36	V
Output Voltage Trim Range	V_{OUT_DC}	[d] [h]	2.3	3.3	4.1	V
Line Regulation	ΔV_{OUT} (ΔV_{IN})	@25°C, 8V < V_{IN} < 36V		0.10		%
Load Regulation	ΔV_{OUT} (ΔI_{OUT})	@25°C, 0.5A < I_{OUT} < 15A		0.10		%
Output Voltage Ripple	V_{OUT_AC}	I_{OUT} = 5A, C_{OUT} = 4 x 100µF, 20MHz BW [e]		37.5		mV_{P-P}
Continuous Output Current Range	I_{OUT_DC}	[f] [h]	**0**		15	A
Current Limit	I_{OUT_CL}			18.0		A
Protection						
V_{IN} UVLO Start Threshold	V_{UVLO_START}		7.10	7.60	8.00	V
V_{IN} UVLO Stop Threshold	V_{UVLO_STOP}		6.80	7.25	7.60	V
V_{IN} UVLO Hysteresis	V_{UVLO_HYS}			0.35		V
V_{IN} OVLO Start Threshold	V_{OVLO_START}		36.1	37.6		V
V_{IN} OVLO Stop Threshold	V_{OVLO_STOP}		37.0	38.4		V
V_{IN} OVLO Hysteresis	V_{OVLO_HYS}			0.8		V
V_{IN} UVLO/OVLO Fault Delay Time	t_{f_DLY}	Number of the switching frequency cycles			128	Cycles
V_{IN} UVLO/OVLO Response Time	t_f			500		ns
Output Overvoltage Protection	V_{OVP}	Above V_{OUT}		20		%
Overtemperature Fault Threshold	T_{OTP}	[c]	130	135	140	°C
Overtemperature Restart Hysteresis	T_{OTP_HYS}			30		°C

[b] All parameters reflect regulator and inductor system performance. Measurements were made using a standard PI33xx evaluation board with 3x4" dimensions and 4 layer, 2oz copper. Refer to inductor pairing table within Application Description section for specific inductor manufacturer and value.
[c] Regulator is assured to meet performance specifications by design, test correlation, characterization, and/or statistical process control.
[d] Output current capability may be limited and other performance may vary from electrical characteristics when switching frequency or V_{OUT} is modified.
[e] Refer to Output Ripple plots.
[f] Refer to Load Current vs. Ambient Temperature curves.
[g] Refer to Switching Frequency vs. Load current curves.
[h] Minimum 5V between V_{IN} – V_{OUT} must be maintained or a minimum load of 1mA required.

PI3301-21-LGIZ (3.3V_{OUT}) Electrical Characteristics (Cont.)

Unless otherwise specified: –40°C < T_J < 125°C, V_{IN} = 24V, L1 = 155nH [b]

Parameter	Symbol	Conditions	Min	Typ	Max	Unit
Timing						
Switching Frequency	f_S	[g]		650		kHz
Fault Restart Delay	t_{FR_DLY}			30		ms
Sync In (SYNCI)						
Synchronization Frequency Range	Δf_{SYNCI}	Relative to set switching frequency [d]	50		110	%
SYNCI Threshold	V_{SYNCI}			2.5		V
Sync Out (SYNCO)						
SYNCO High	V_{SYNCO_HI}	Source 1mA	4.5			V
SYNCO Low	V_{SYNCO_LO}	Sink 1mA			0.5	V
SYNCO Rise Time	t_{SYNCO_RT}	20pF load		10		ns
SYNCO Fall Time	t_{SYNCO_FT}	20pF load		10		ns
Soft Start And Tracking						
TRK Active Input Range	V_{TRK}	Internal reference tracking range	0		1.04	V
TRK Max Output Voltage	V_{TRK_MAX}			1.2		V
TRK Disable Threshold	V_{TRK_OV}		20	40	60	mV
Charge Current (Soft Start)	I_{TRK}		–70	–50	–30	µA
Discharge Current (Fault)	I_{TRK_DIS}			6.8		mA
Soft-Start Time	t_{SS}	C_{TRK} = 0µF		2.2		ms
Enable						
High Threshold	V_{EN_HI}		0.9	1	1.1	V
Low Threshold	V_{EN_LO}		0.7	0.8	0.9	V
Threshold Hysteresis	V_{EN_HYS}		100	200	300	mV
Enable Pull-Up Voltage (floating, unfaulted)	V_{EN_PU}			2		V
Enable Pull-Down Voltage (floating, faulted)	V_{EN_PD}			0		V
Source Current	I_{EN_SO}			–50		µA
Sink Current	I_{EN_SK}			50		µA

[b] All parameters reflect regulator and inductor system performance. Measurements were made using a standard PI33xx evaluation board with 3x4" dimensions and 4 layer, 2oz copper. Refer to inductor pairing table within Application Description section for specific inductor manufacturer and value.
[c] Regulator is assured to meet performance specifications by design, test correlation, characterization, and/or statistical process control.
[d] Output current capability may be limited and other performance may vary from electrical characteristics when switching frequency or V_{OUT} is modified.
[e] Refer to Output Ripple plots.
[f] Refer to Load Current vs. Ambient Temperature curves.
[g] Refer to Switching Frequency vs. Load current curves.
[h] Minimum 5V between V_{IN} – V_{OUT} must be maintained or a minimum load of 1mA required.

PI3301-x0-LGIZ (3.3V_{OUT}) Electrical Characteristics (Cont.)

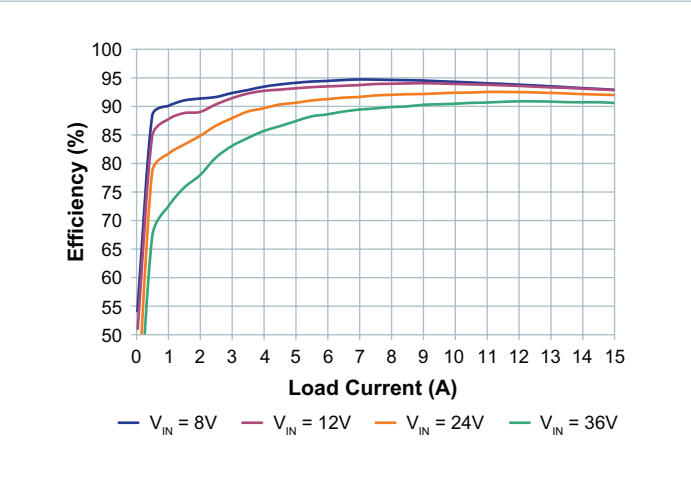

Figure 19 *— Efficiency at 25°C*

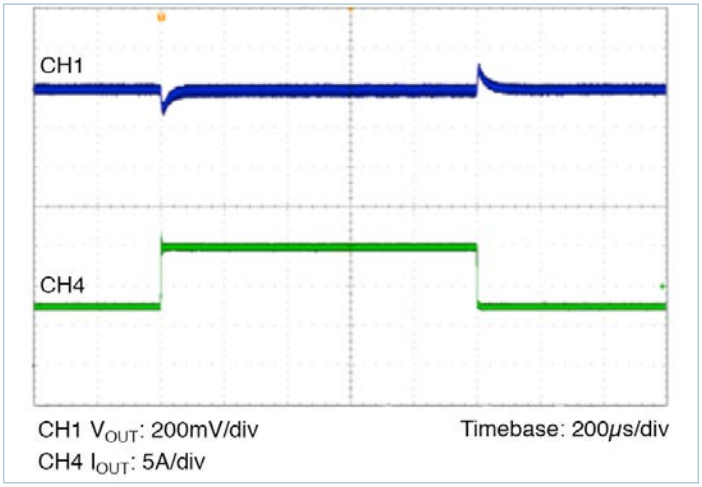

Figure 22 *— Transient response 7.5A to 15A, at 5A/µs 24V_{IN} to 3.3V_{OUT}, C_{OUT} = 8 x 100µF ceramic*

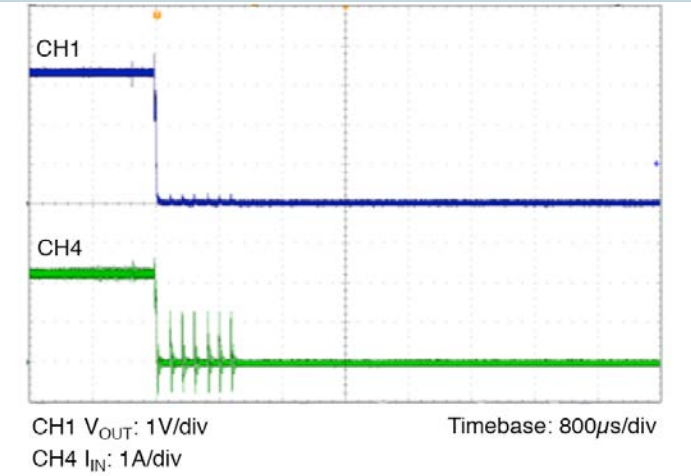

Figure 20 *— Short circuit test*

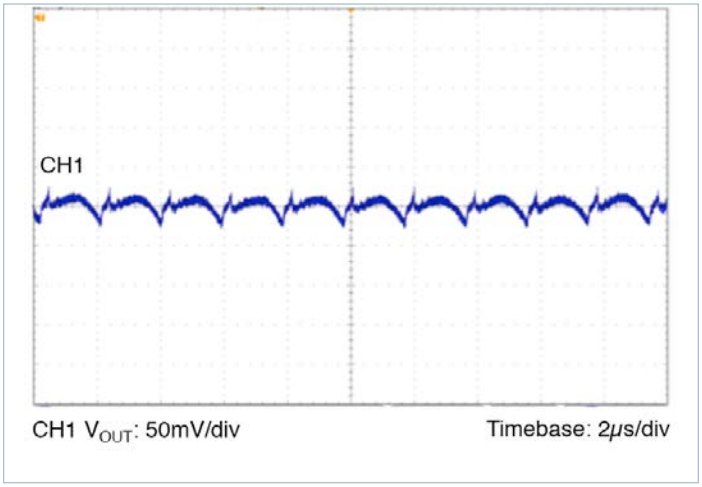

Figure 23 *— Output ripple 24V_{IN}, 3.3V_{OUT} at 15A C_{OUT} = 8 x 100µF ceramic*

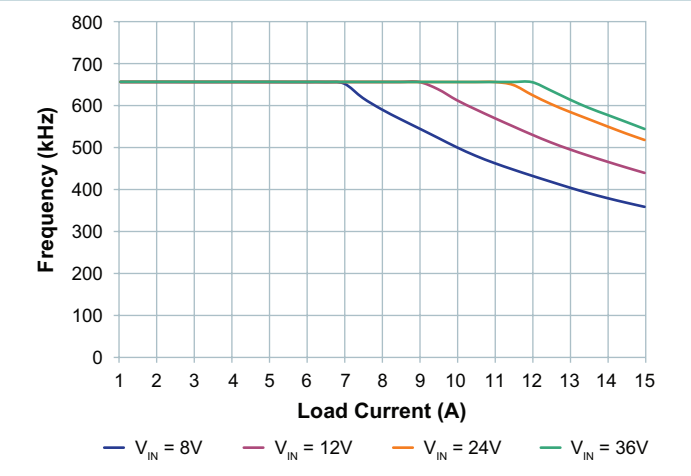

Figure 21 *— Switching frequency vs. load current*

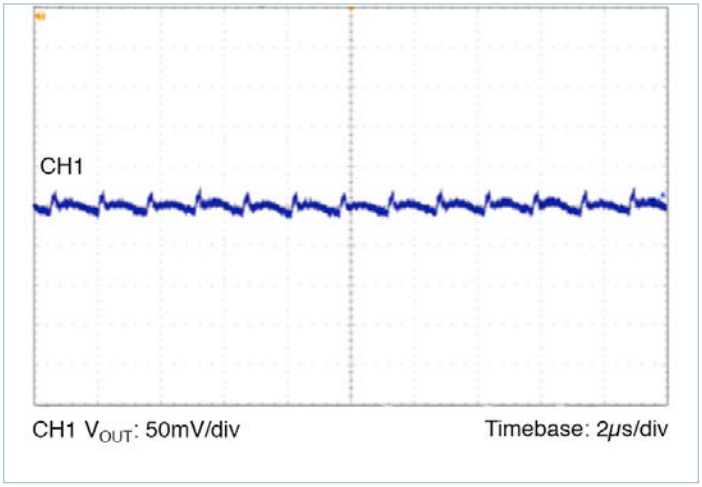

Figure 24 *— Output ripple 24V_{IN}, 3.3V_{OUT} at 7.5A C_{OUT} = 8 x 100µF ceramic*

Functional Description

The PI33xx-x1 is a family of highly integrated ZVS Buck regulators. The PI33xx-x1 has a set output voltage that is trimmable within a prescribed range shown in Table 2. Performance and maximum output current are characterized with a specific external power inductor (see Table 5).

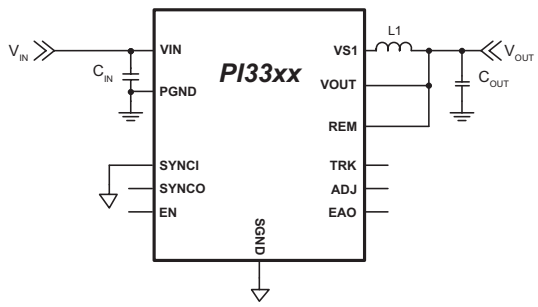

Figure 25 *— ZVS Buck with required components*

For basic operation, Figure 25 shows the connections and components required. No additional design or settings are required.

ENABLE (EN)

EN is the enable pin of the converter. The EN Pin is referenced to SGND and permits the user to turn the regulator on or off. The EN default polarity is a positive logic assertion. If the EN pin is left floating or asserted high, the converter output is enabled. Pulling EN pin below $0.8V_{DC}$ with respect to SGND will disable the regulator output.

The EN input polarity can be programmed (PI33xx-21 device versions only) via the I²C™ data bus. When the EN pin polarity is programmed for negative logic assertion; and if the EN pin is left floating, the regulator output is enabled. Pulling the EN pin above $1.0V_{DC}$ with respect to SGND will disable the regulator output.

Remote Sensing

An internal 100Ω resistor is connected between REM pin and VOUT pin to provide regulation when the REM connection is broken. Referring to Figure 25, it is important to note that L1 and C_{OUT} are the output filter and the local sense point for the power supply output. As such, the REM pin should be connected at C_{OUT} as the default local sense connection unless remote sensing to compensate additional distribution losses in the system. The REM pin should not be left floating.

Switching Frequency Synchronization

The SYNCI input allows the user to synchronize the controller switching frequency by an external clock referenced to SGND. The external clock can synchronize the unit between 50% and 110% of the preset switching frequency (f_S). For PI33xx-21 device versions only, the phase delay can be programmed via I²C bus with respect to the clock applied at SYNCI pin. Phase delay allows PI33xx-21 regulators to be paralleled and operate in an interleaving mode.

The PI33xx-x1 default for SYNCI is to sync with respect to the falling edge of the applied clock providing 180° phase shift from SYNCO. This allows for the paralleling of two PI33xx-x1 devices without the need for further user programming or external sync clock circuitry. The user can change the SYNCI polarity to sync with the external clock rising edge via the I²C data bus (PI33xx-21 device versions only).

When using the internal oscillator, the SYNCO pin provides a 5V clock that can be used to sync other regulators. Therefore, one PI33xx-x1 can act as the lead regulator and have additional PI33xx-x1s running in parallel and interleaved.

Soft Start

The PI33xx-x1 includes an internal soft-start capacitor to ramp the output voltage in 2ms from 0V to full output voltage. Connecting an external capacitor from the TRK pin to SGND will increase the start-up ramp period. See "Soft Start Adjustment and Track," in the Applications Description section for more details.

Output Voltage Trim

The PI33xx-x1 output voltage can be trimmed up from the preset output by connecting a resistor from ADJ pin to SGND and can be trimmed down by connecting a resistor from ADJ pin to VOUT. Table 2 defines the voltage ranges for the PI33xx-x1 family.

Device	Output Voltage	
	Set	Range
PI3311-x1-LGIZ	1.0V	1.0 – 1.4V
PI3318-x1-LGIZ	1.8V	1.4 – 2.0V
PI3312-x1-LGIZ	2.5V	2.0 – 3.1V
PI3301-21-LGIZ	3.3V	2.3 – 4.1V

Table 2 *— PI33xx-x1 family output voltage range*

Output Current Limit Protection

PI33xx-x1 has two methods implemented to protect from output short or overcurrent condition.

Slow Current Limit protection: prevents the output load from sourcing current higher than the regulator's maximum rated current. If the output current exceeds the Current Limit (I_{OUT_CL}) for 1024µs, a slow current limit fault is initiated and the regulator is shut down which eliminates output current flow. After Fault Restart Delay (t_{FR_DLY}), a soft-start cycle is initiated. This restart cycle will be repeated indefinitely until the excessive load is removed.

Fast Current Limit protection: PI33xx-x1 monitors the regulator inductor current pulse-by-pulse to prevent the output from supplying very high current due to sudden low impedance short. If the regulator senses a high inductor current pulse, it will initiate a fault and stop switching until Fault Restart Delay ends and then initiate a soft-start cycle.

Both the Fast and Slow current limit faults are stored in a Fault Register and can be read and cleared (PI33xx-21 device versions only) via I^2C™ data bus.

Input Undervoltage Lockout

If V_{IN} falls below the input Undervoltage Lockout (UVLO) threshold, the regulator will enter a low power state and initiate a fault. The system will restart once the input voltage is reestablished and after the Fault Restart Delay. A UVLO fault is stored in a Fault Register and can be read and cleared (PI33xx-21 device versions only) via I^2C data bus.

Input Overvoltage Lockout

If V_{IN} exceeds the input Overvoltage Lockout (OVLO) threshold (V_{OVLO}), while the regulator is running, the PI33xx-x1 will complete the current cycle and stop switching. The system will resume operation after the Fault Restart Delay. The OVLO fault is stored in a Fault Register and can be read and cleared (PI33xx-21 device versions only) via I^2C data bus.

Output Overvoltage Protection

The PI33xx-x1 family is equipped with output Overvoltage Protection (OVP) to prevent damage to input voltage sensitive devices. If the output voltage exceeds 20% of its set regulated value, the regulator will complete the current cycle, stop switching and issue an OVP fault. The system will resume operation once the output voltage falls below the OVP threshold and after Fault Restart Delay. The OVP fault is stored in a Fault Register and can be read and cleared (PI33xx-21 device versions only) via I^2C data bus.

Overtemperature Protection

The internal package temperature is monitored to prevent internal components from reaching their thermal maximum. If the Overtemperature Protection Threshold (OTP) is exceeded (T_{OTP}), the regulator will complete the current switching cycle, enter a low power mode, set a fault flag, and will soft start when the internal temperature falls below Overtemperature Restart Hysteresis (T_{OTP_HYS}). The OTP fault is stored in a Fault Register and can be read and cleared (PI33xx-21 device versions only) via I^2C data bus.

Pulse Skip Mode (PSM)

PI33xx-x1 features a PSM to achieve high efficiency at light loads. The regulators are setup to skip pulses if EAO falls below a PSM threshold. Depending on conditions and component values, this may result in single pulses or several consecutive pulses followed by skipped pulses. Skipping cycles significantly reduces gate drive power and improves light load efficiency. The regulator will leave PSM once the EAO rises above the Skip Mode threshold.

Variable Frequency Operation

Each PI33xx-x1 is preprogrammed to a base operating frequency, with respect to the power stage inductor (see Table 5), to operate at peak efficiency across line and load variations. At low-line and high-load applications, the base frequency will decrease to accommodate these extreme operating ranges. By stretching the frequency, the ZVS operation is preserved throughout the total input line voltage range therefore maintaining optimum efficiency.

Parallel Operation

Paralleling modules can be used to increase the output current capability of a single power rail and reduce output voltage ripple.

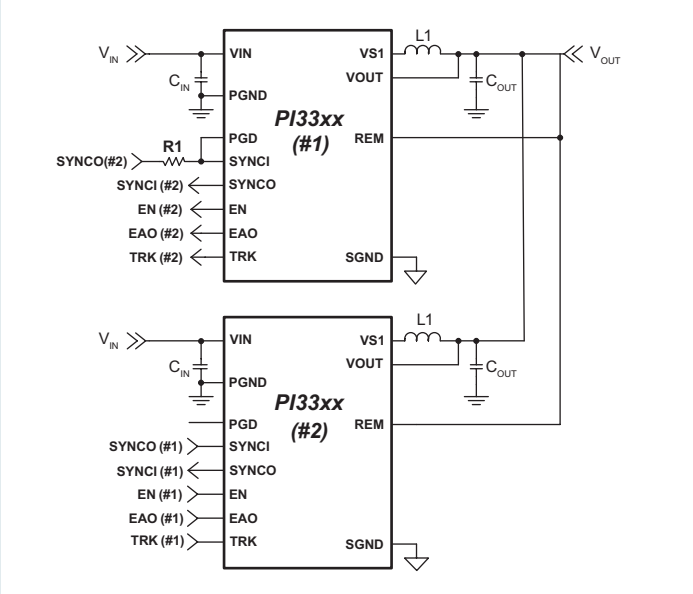

Figure 26 *— PI33xx-x1 parallel operation*

By connecting the EAO pins and SGND pins of each module together the units will share the current equally. When the TRK pins of each unit are connected together, the units will track each other during soft start and all unit EN pins have to be released to allow the units to start (see Figure 26). Also, any fault event in any regulator will disable the other regulators. The two regulators will be out of phase with each other reducing output ripple (refer to Switching Frequency Synchronization).

To provide synchronization between regulators over the entire operational frequency range, the Parallel Good (PGD) pin must be connected to the lead regulator's (#1) SYNCI pin and a 2.5kΩ resistor, R1, must be placed between SYNCO (#2) return and the lead regulator's SYNCI (#1) pin, as shown in Figure 26. In this configuration, at system soft start, the PGD pin pulls SYNCI low forcing the lead regulator to initialize the open-loop start-up synchronization. Once the regulators reach regulation, SYNCI is released and the system is now synchronized in a closed-loop configuration which allows the system to adjust on the fly, when any of the individual regulators begin to enter variable frequency mode in the loop.

Multi-phasing three regulators is possible (PI33xx-21 only) with no change to the basic single-phase design. For more information about how to program phase delays within the regulator, please refer to application note PI33xx-2x Multi-Phase Design Guide.

I²C Interface Operation

PI33xx-21 devices provide an I²C™ digital interface that enables the user to program the EN pin polarity (from high to low assertion) and switching frequency synchronization phase/delay. These are one time programmable options to the device.

Also, the PI33xx-21 devices allow for dynamic V_{OUT} margining via I²C that is useful during development (settings stored in volatile memory only and not retained by the device). The PI33xx-21 also have the option for fault telemetry including:

- Overtemperature protection
- Fast / Slow current limit
- Output voltage high
- Input overvoltage
- Input undervoltage

For more information about how to utilize the I²C interface please refer to application note PI33xx-2x I²C Digital Interface Guide.

Application Description

Output Voltage Trim

The PI33xx-x1 family of Buck Regulators provides seven common output voltages: 1.0, 1.8, 2.5 and 3.3V. A post-package trim step is implemented to offset any resistor divider network errors ensuring maximum output accuracy. With a single resistor connected from the ADJ pin to SGND or REM, each device's output can be varied above or below the nominal set voltage (with the exception of the PI3311-x1 which can only be above the set voltage of 1V).

Device	Output Voltage	
	Set	Range
PI3311-x1-LGIZ	1.0V	1.0 – 1.4V
PI3318-x1-LGIZ	1.8V	1.4 – 2.0V
PI3312-x1-LGIZ	2.5V	2.0 – 3.1V
PI3301-21-LGIZ	3.3V	2.3 – 4.1V

Table 3 *— PI33xx-x1 family output voltage range*

The remote pin (REM) should always be connected to the VOUT pin, if not used, to prevent an output voltage offset. Figure 27 shows the internal feedback voltage divider network.

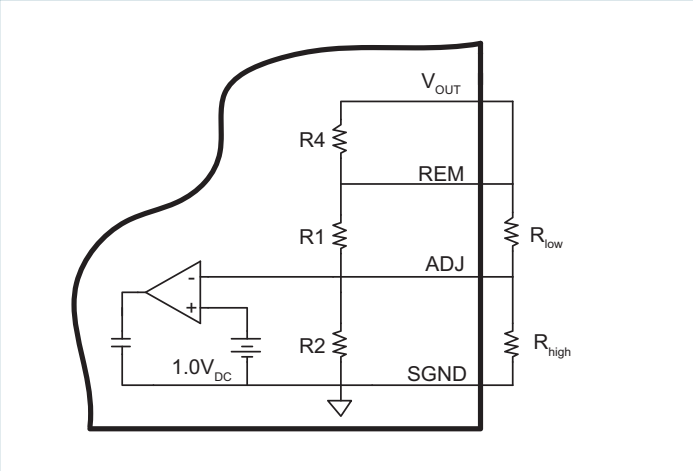

Figure 27 *— Internal resistor divider network*

R1, R2, and R4 are all internal 1.0% resistors and R_{LOW} and R_{HIGH} are external resistors for which the designer can add to modify V_{OUT} to a desired output. The internal resistor value for each regulator is listed below in Table 4.

Device	R1	R2	R4
PI3311-x1-LGIZ	1kΩ	Open	100Ω
PI3318-x1-LGIZ	0.806kΩ	1.0kΩ	100Ω
PI3312-x1-LGIZ	1.5kΩ	1.0kΩ	100Ω
PI3301-21-LGIZ	2.61kΩ	1.13kΩ	100Ω

Table 4 *— PI33xx-x1 Internal divider values*

By choosing an output voltage value within the ranges stated in Table 3, V_{OUT} can simply be adjusted up or down by selecting the proper R_{HIGH} or R_{LOW} value, respectively. The following equations can be used to calculate R_{HIGH} and R_{LOW} values:

$$R_{HIGH} = \frac{1}{\frac{(V_{OUT}-1)}{R1} - \left(\frac{1}{R2}\right)} \quad (1)$$

$$R_{LOW} = \frac{1}{\frac{1}{R2(V_{OUT}-1)} - \left(\frac{1}{R1}\right)} \quad (2)$$

If, for example, a 4.0V output is needed, the user should choose the regulator with a trim range covering 4.0V from Table 3. For this example, the PI3301 is selected (3.3V set voltage). First step would be to use Equation 1 to calculate R_{HIGH} since the required output voltage is higher than the regulator set voltage. The resistor-divider network values for the PI3301 are can be found in Table 4 and are R1 = 2.61kΩ and R2 = 1.13kΩ. Inserting these values in to Equation 1, R_{HIGH} is calculated as follows:

$$3.78k\Omega = \frac{1}{\frac{(4.0-1)}{2.61k\Omega} - \left(\frac{1}{1.13k\Omega}\right)} \quad (3)$$

Resistor R_{HIGH} should be connected as shown in Figure 27 to achieve the desired 4.0V regulator output. No external R_{LOW} resistor is need in this design example since the trim is above the regulator set voltage.

The PI3311-x1 output voltage can only be trimmed higher than the factory 1V setting. The following Equation 4 can be used calculate R_{HIGH} values for the PI3311-x1 regulators.

$$R_{HIGH\,(1V)} = \frac{1}{\frac{(V_{OUT}-1)}{R1}} \quad (4)$$

Soft Start Adjust and Tracking

The TRK pin offers a means to increase the regulator's soft-start time or to track with additional regulators. The soft-start slope is controlled by an internal capacitor and a fixed charge current to provide a soft-start time t_{SS} for all PI33xx-x1 regulators. By adding an additional external capacitor to the TRK pin, the soft-start time can be increased further. The following equation can be used to calculate the proper capacitor for a desired soft-start times:

$$C_{TRK} = (t_{TRK} \bullet I_{TRK}) - 100 \bullet 10^{-9} \qquad (5)$$

Where, t_{TRK} is the soft-start time and I_{TRK} is a 50µA internal charge current (see Electrical Characteristics for limits).

There is typically either proportional or direct tracking implemented within a design. For proportional tracking between several regulators at start up, simply connect all devices' TRK pins together. This type of tracking will force all connected regulators to start up and reach regulation at the same time (see Figure 28(a)).

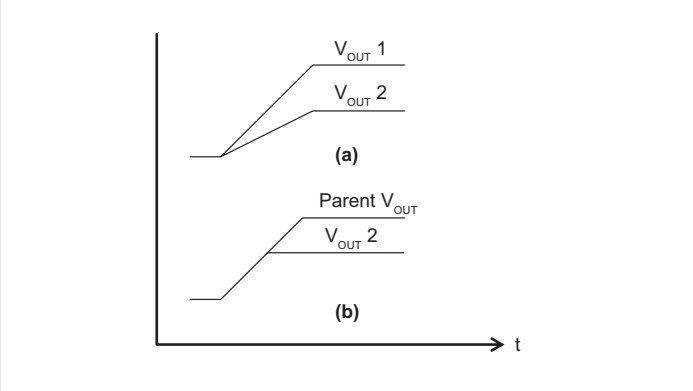

Figure 28 *— PI33xx-x1 tracking methods*

For Direct Tracking, choose the regulator with the highest output voltage as the parent and connect the parent to the TRK pin of the other regulators through a divider (Figure 29) with the same ratio as the child's feedback divider (see Table 4 for values).

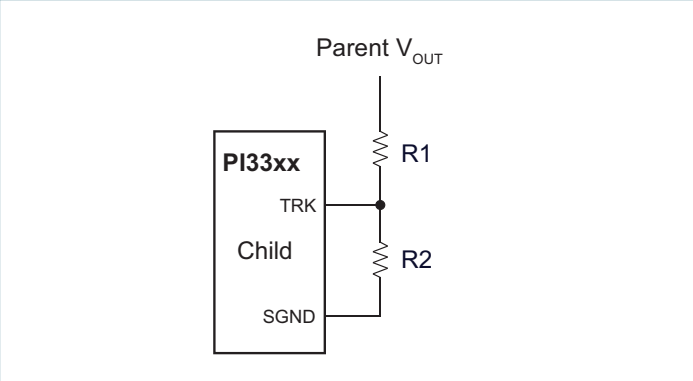

Figure 29 *— Voltage divider connections for direct tracking*

All connected regulators' soft-start slopes will track with this method. Direct tracking timing is demonstrated in Figure 28(b). All tracking regulators should have their Enable (EN) pins connected together to work properly.

Inductor Pairing

The PI33xx-x1 utilizes an external inductor. This inductor has been optimized for maximum efficiency performance. Table 5 details the specific inductor value and part number utilized for each PI33xx-x1 device which are manufactured by Eaton. Data sheets are available at:

https://www.eaton.com/

Device	Inductor (nH)	Inductor Part Number	Manufacturer
PI3311-x1	85	FPV1006-85-R	Eaton
PI3318-x1	125	FPV1006-125-R	Eaton
PI3312-x1	125	FPV1006-125-R	Eaton
PI3301-21	150	FPV1006-150-R	Eaton

Table 5 *— PI33xx-x1 inductor pairing*

Layout Guidelines

To optimize maximum efficiency and low-noise performance from a PI33xx-x1 design, layout considerations are necessary. Reducing trace resistance and minimizing high-current loop returns along with proper component placement will contribute to optimized performance.

A typical buck converter circuit is shown in Figure 30. The potential areas of high parasitic inductance and resistance are the circuit return paths, shown as LR below.

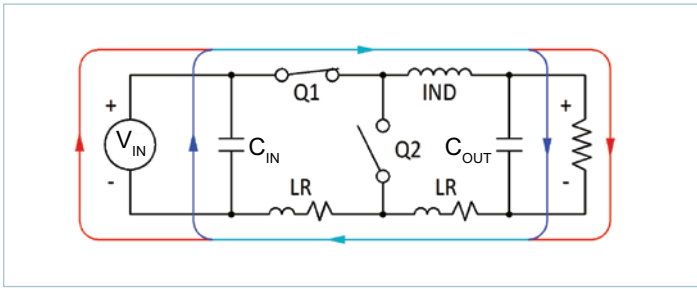

Figure 30 *— Typical buck converter*

The path between the C_{OUT} and C_{IN} capacitors is of particular importance since the AC currents are flowing through both of them when Q1 is turned on.

Figure 31, schematically, shows the reduced trace length between input and output capacitors. The shorter path lessens the effects that copper trace parasitics can have on the PI33xx-x1 performance.

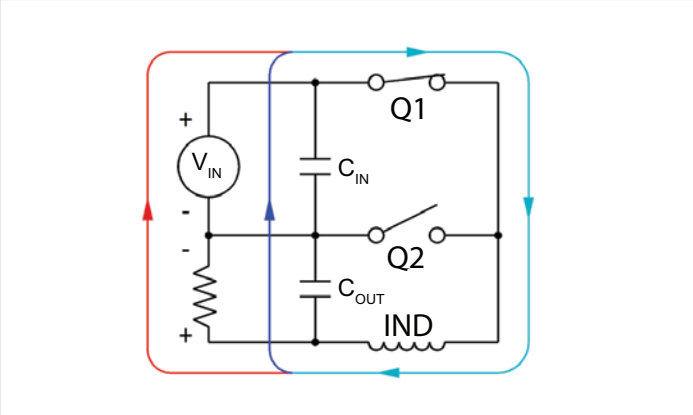

Figure 31 *— Current flow: Q1 closed*

When Q1 is on and Q2 is off, the majority of C_{IN}'s current is used to satisfy the output load and to recharge the C_{OUT} capacitors. When Q1 is off and Q2 is on, the load current is supplied by the inductor and the C_{OUT} capacitor as shown in Figure 32. During this period C_{IN} is also being recharged by the V_{IN}. Minimizing C_{IN} loop inductance is important to reduce peak voltage excursions when Q1 turns off. Also, the difference in area between the C_{IN} loop and C_{OUT} loop is vital to minimize switching and GND noise.

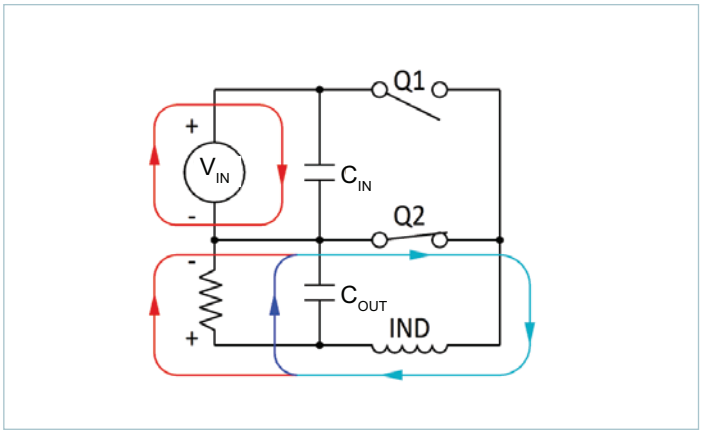

Figure 32 *— Current flow: Q2 closed*

The recommended component placement, shown in Figure 33, illustrates the tight path between C_{IN} and C_{OUT} (and V_{IN} and V_{OUT}) for the high AC return current. This optimized layout is used on the PI33xx-x1 evaluation board.

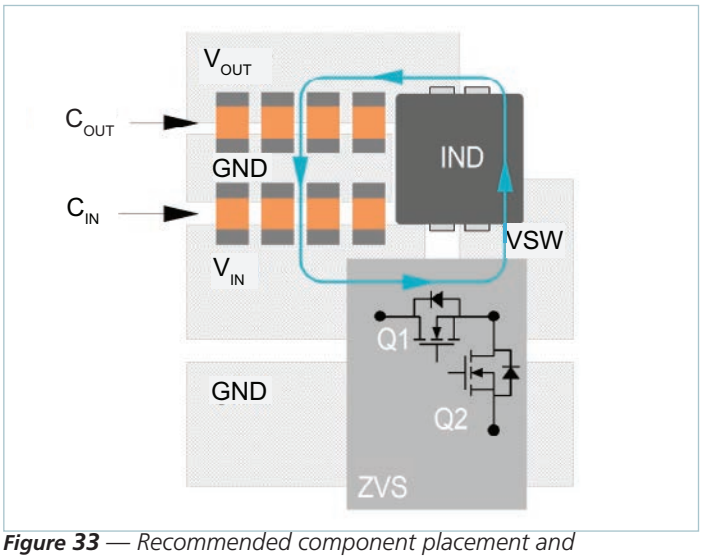

Figure 33 *— Recommended component placement and metal routing*

Recommended PCB Footprint and Stencil

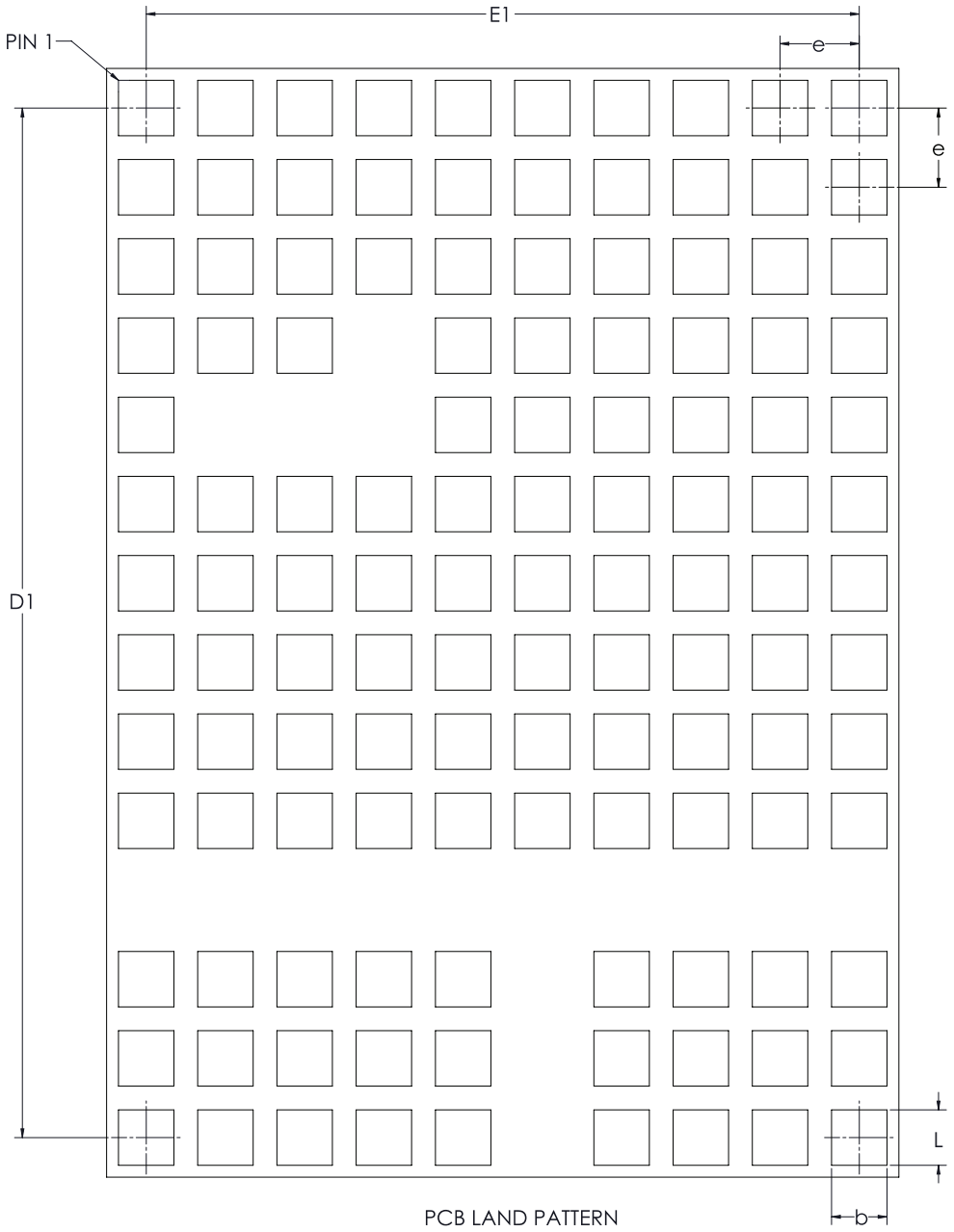

PCB LAND PATTERN

PI34xx-00

DIMENSIONAL REFERENCES			
REF.	MIN.	NOM.	MAX.
b	0.50	0.55	0.60
D1	13.00 BSC		
E1	9.00 BSC		
e	1.00 BSC		
L	.50	.55	.60

Recommended receiving footprint for PI33x-x1 10 x 14mm package. All pads should have a final copper size of 0.55 x 0.55mm, whether they are solder-mask defined or copper defined, on a 1 x 1mm grid. All stencil openings are 0.45mm when using either a 5 or 6mil stencil.

Package Drawings

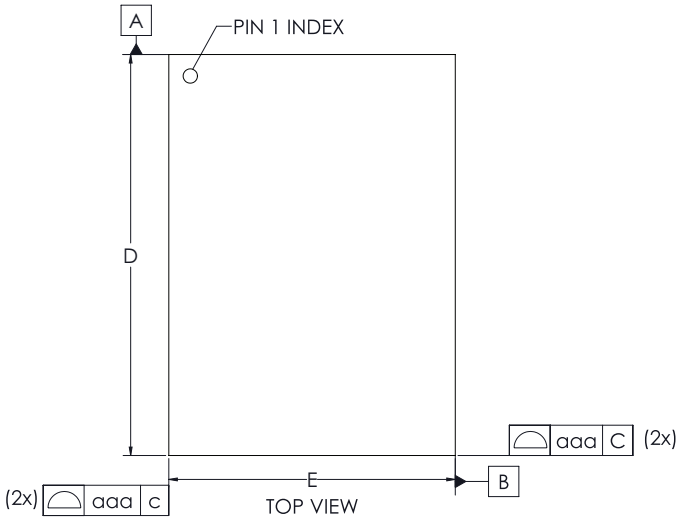

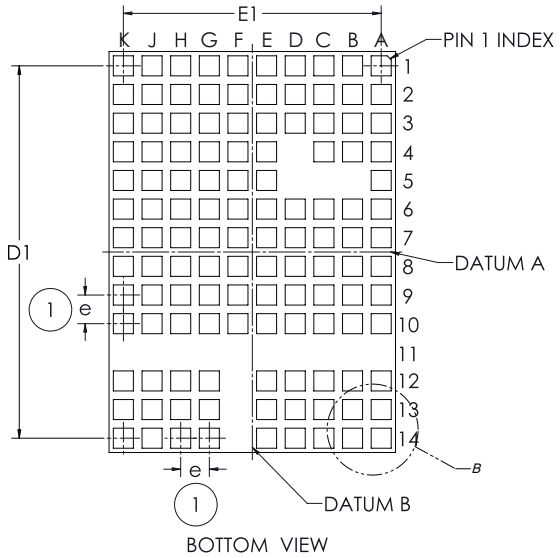

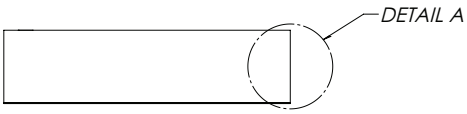

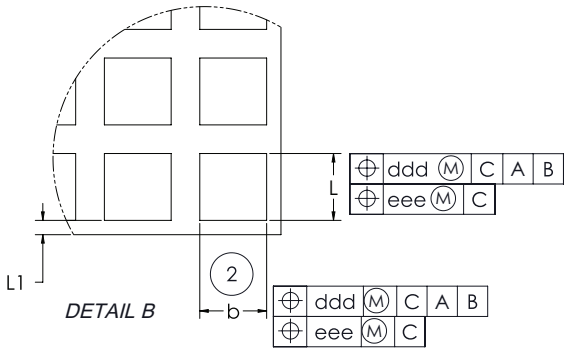

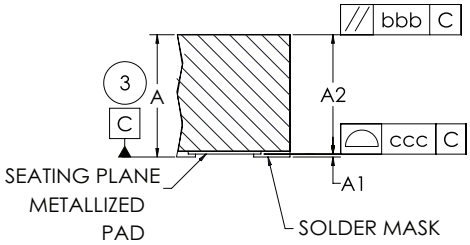

10 x 14mm SIP			
DIMENSIONAL REFERENCES			
REF.	MIN.	NOM.	MAX.
A	2.49	2.56	2.63
A1	--	--	0.04
A2	--	--	2.59
b	0.50	0.55	0.60
L	0.50	0.55	0.60
D	14.00 BSC		
E	10.00 BSC		
D1	13.00 BSC		
E1	9.00 BSC		
e	1.00 BSC		
L1	0.175	0.225	0.250

NOTES:
1. 'e' REPRESENTS THE BASIC TERMINAL PITCH. SPECIFIES THE TRUE GEOMETRIC POSITION OF THE TERMINAL AXIS.
2. DIMENSION 'b' APPLIES TO METALLIZED TERMINAL AND IS MEASURED BETWEEN 0.00mm AND 0.25mm FROM TERMINAL TIP.
3. DIMENSION 'A' INCLUDES PACKAGE WARPAGE
4. EXPOSED METALLIZED PADS ARE CU PADS WITH SURFACE FINISH PROTECTION.
5. ALL DIMENSIONS ARE IN MM UNLESS OTHERWISE SPECIFIED.
6. RoHS COMPLIANT PER CST-0001 LATEST REVISION.

DIMENSIONAL REFERENCES	
REF.	TOLERANCE OF FORM AND POSITION
aaa	0.10
bbb	0.10
ccc	0.08
ddd	0.10
eee	0.08

Revision History

Revision	Date	Description	Page Number(s)
1.3	09/15/16	Last release in old format	n/a
1.4	11/21/16	Reformatted in new template Clarified VS1 rating in Absolute Maximum Ratings Table Updated pin description table and package pin-out labels to show VDR capability	all 4 5
1.5	04/03/20	Updated mechanical drawings and pinout format (no mechanical changes)	6, 25, 26
1.6	08/19/20	Updated terminology	23
1.7	12/24/20	Separated end-of-life part numbers from main data sheet (for PI3301-01, see PI33xx-0x data sheet)	All

Vicor's comprehensive line of power solutions includes high density AC-DC and DC-DC modules and accessory components, fully configurable AC-DC and DC-DC power supplies, and complete custom power systems.

Information furnished by Vicor is believed to be accurate and reliable. However, no responsibility is assumed by Vicor for its use. Vicor makes no representations or warranties with respect to the accuracy or completeness of the contents of this publication. Vicor reserves the right to make changes to any products, specifications, and product descriptions at any time without notice. Information published by Vicor has been checked and is believed to be accurate at the time it was printed; however, Vicor assumes no responsibility for inaccuracies. Testing and other quality controls are used to the extent Vicor deems necessary to support Vicor's product warranty. Except where mandated by government requirements, testing of all parameters of each product is not necessarily performed.

Specifications are subject to change without notice.

Visit http://www.vicorpower.com/dc-dc-converters-board-mount/cool-power-pi33xx-and-pi34xx for the latest product information.

Vicor's Standard Terms and Conditions and Product Warranty

All sales are subject to Vicor's Standard Terms and Conditions of Sale, and Product Warranty which are available on Vicor's webpage (http://www.vicorpower.com/termsconditionswarranty) or upon request.

Life Support Policy

VICOR'S PRODUCTS ARE NOT AUTHORIZED FOR USE AS CRITICAL COMPONENTS IN LIFE SUPPORT DEVICES OR SYSTEMS WITHOUT THE EXPRESS PRIOR WRITTEN APPROVAL OF THE CHIEF EXECUTIVE OFFICER AND GENERAL COUNSEL OF VICOR CORPORATION. As used herein, life support devices or systems are devices which (a) are intended for surgical implant into the body, or (b) support or sustain life and whose failure to perform when properly used in accordance with instructions for use provided in the labeling can be reasonably expected to result in a significant injury to the user. A critical component is any component in a life support device or system whose failure to perform can be reasonably expected to cause the failure of the life support device or system or to affect its safety or effectiveness. Per Vicor Terms and Conditions of Sale, the user of Vicor products and components in life support applications assumes all risks of such use and indemnifies Vicor against all liability and damages.

Intellectual Property Notice

Vicor and its subsidiaries own Intellectual Property (including issued U.S. and Foreign Patents and pending patent applications) relating to the products described in this data sheet. No license, whether express, implied, or arising by estoppel or otherwise, to any intellectual property rights is granted by this document. Interested parties should contact Vicor's Intellectual Property Department.

The products described on this data sheet are protected by U.S. Patents. Please see www.vicorpower.com/patents for the latest patent information.

Contact Us: http://www.vicorpower.com/contact-us

Vicor Corporation
25 Frontage Road
Andover, MA, USA 01810
Tel: 800-735-6200
Fax: 978-475-6715
www.vicorpower.com

email
Customer Service: custserv@vicorpower.com
Technical Support: apps@vicorpower.com

©2018 – 2020 Vicor Corporation. All rights reserved. The Vicor name is a registered trademark of Vicor Corporation.
I²C™ is a trademark of NXP semiconductor.
All other trademarks, product names, logos and brands are property of their respective owners.