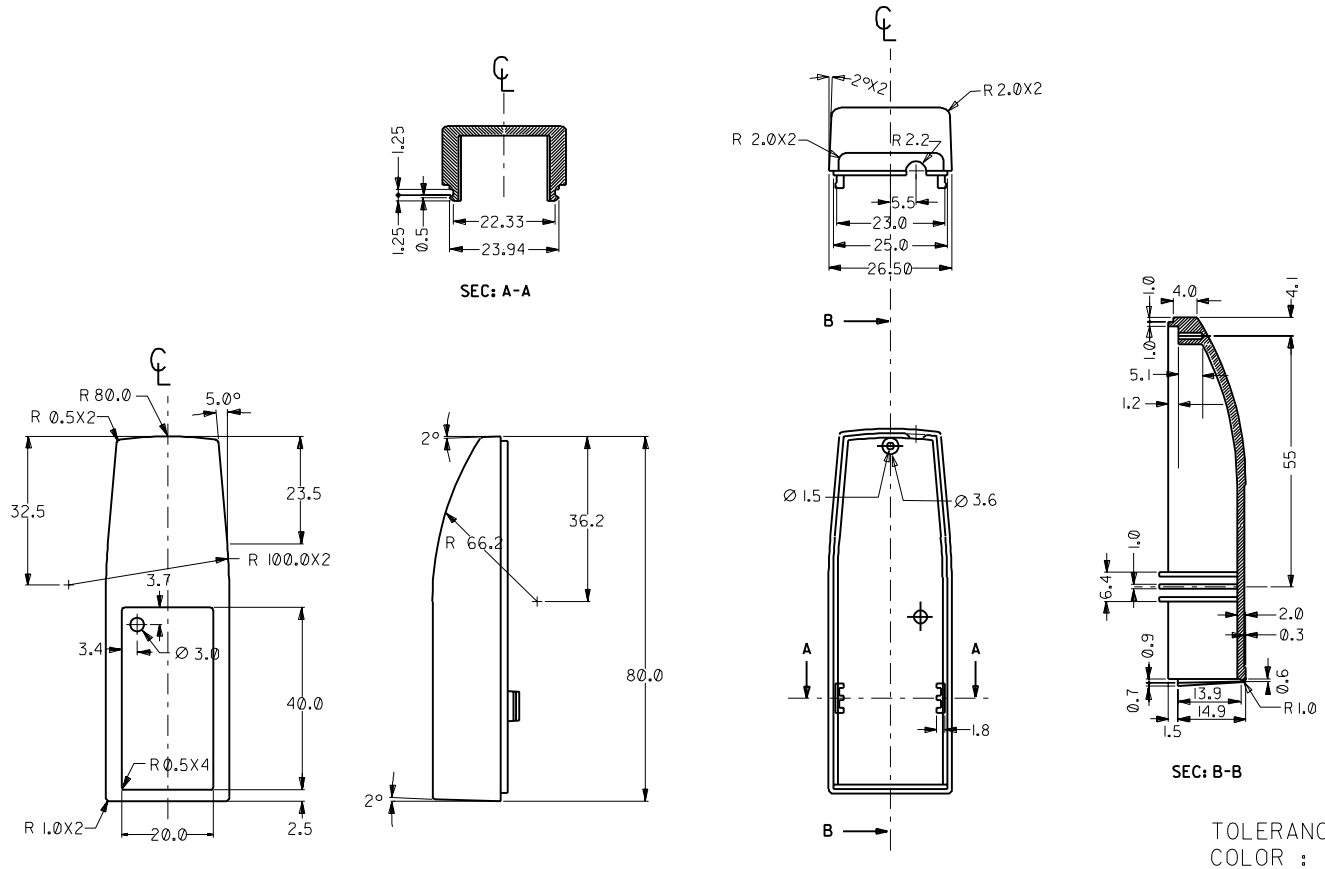

TOLERANCE : ±0.1
COLOR : BALCK

LTR	REVISION RECORD	ECN	DR	DATE
D	REV.PER ECN TA95-157		JWU	950516
C	REV.PER ECN TA94-242		SAM	941215
B	REV.PER ECN TA94-009		EWA	940119
A	REV.PER ECN TA93-233		EWA	931104
2	REV. PER ECN TA93-016		JYC	930202
1	NEW RELEASE			
	PER ECN TA93-012		JYC	930120

REVISE ONLY ON CAD SYSTEM

MATERIAL : ABS,UL94V-0

FINISH :

WIRE RANGE :

INS. RANGE :

DRAWN BY 930120 JYC

CHK'D BY

APPR'D BY

SCALE 1 : 1

MOLEX TAIWAN LTD.

SHEET 1 OF 1

GENERAL TOLERANCES
ANGLE : ± 3° DIM : ± .25/.010

ENG. NO.: SDE-89500-0023

REV D

TITLE : PCMCIA TYPE II MEMORY CARD, FRAME KIT.(UP-LID)

ENG. NO SDE-89500-0023

EDP NO.

SIMILAR ITEM

CAD FILE : S89500023

DO NOT SCALE DRAWING

THIS DRAWING CONTAINS INFORMATION THAT IS PROPRIETARY TO MOLEX (FEML) AND SHOULD NOT BE USED WITHOUT WRITTEN PERMISSION