GlobTek, Inc.
www.globtek.com
186 Veterans Drive,
Northvale, NJ 07647
Tel. (201) 784-1000
Fax (201) 784-0111

Drawing Title: GTM961200P10812-T3, ICT / ITE / Medical Power Supply, Efficiency Level: USA DOE Level VI / Eco-design Directive 2009/125/EC, (EU) 2019/1782, Case Color/Style: GlobTek Black, Desktop/External, Regulated Switchmode AC-DC Power Supply AC Adaptor, Input Rating: 100-240V~, 50-60 Hz, IEC 60320/C14 , Output Rating: 108W, 12.0V@9.0A, Output Configuration: 1200 mm, 14/1C + Shield Cond, UL 1185, Female Barrel 5.5 * 2.1 * 11 mm with internal Spring Clip and Locking Notch or Equal; Barrel rated for 10A, Ferrite: None, GlobTek Black, GT Cord # C48272, Pin Out: Center Positive (+V), symbol compliant with IEC 60417 symbol no. 5926, Blades/Input Cord: Not Applicable, Approvals: CB 61347; RCM; CCC; EAC; cETLus 60950-1; cETLus 60601-1-11; S-Mark 62368; IRAM; Malaysia; NOM (24V only); UKCA; Taiwan BSMI (12,15,18,19,24,48,54V only); Conforms to 62368-1; NrCAN (12V only); Morocco; Korea (24,25,26 and 27V Only); Korea (12V and 13V Only); ETL (Brazil); NOM (12V only); South Africa; India BIS (12,15,18,19,24,28,30,48 and 54V); Israel (24V only); Singapore (24V); ETL; S-Mark 60950; CB 60950; CB 60335; CB 62368; ETL; CB 60335; VCCI; CB 60601-1; S-Mark; WEEE; Ukraine; RoHS; ETL 62368; Level VI; China RoHS; CE; Class I; PSE; PSE; PSE;	
Model No. GTM961200P10812-T3	
Part No./Ordering No. TR9CE9000CCP-IM(R6B)	Rev E2

In Addition to GlobTek Inc.'s renewed ISO9001:2015 - Quality Management System Certification, GlobTek Inc. is now certified to:

ISO13485:2016 - Medical Devices Quality Management System Certification
ISO14001:2015 - Environmental Management System Certification

ISO Certificates are available online at https://www.globtek.com/iso-certificates/

The acceptance of this specification and use of the product described in this document indicates the acceptance and binding of the customer to Globtek TERMS AND CONDITIONS (attached to the end of this document), which supersede all other agreements, terms, and conditions (https://en.globtek.com/terms-and-conditions/).

The purchaser of this product (Customer) agrees that it is their sole responsibility to determine suitability/fitness of the product described in this specification for their application and to take precautions for protection against any hazards attendant to the handling and use of the product.

Footnote:

GlobTek Inc. will not be liable for the safety and performance of these power supplies/battery packs if unauthorized access and repair occurs. End user should consult applicable UL, CSA or EN standards for proper installation instruction.

Limitation of Use:

GlobTek products are intended for use with commercial, medical, and/or industrial equipment only. GlobTek product are not authorized for use as mission critical components in life support hazardous environment, nuclear or aircraft applications without prior written approval from the CEO of GlobTek Inc.
Contents of this document are subject to change without prior notice.

Customer Approval of Specification:

Please approve, sign and send back to GlobTek so we can complete order processing.
A delay in receipt of this form will delay delivery schedule.

Company Name:	Customer P/N:
Quote Number:	Date:
Authorized Representative Name:	Authorized Representative Signature:

PROPRIETARY INFORMATION
PROPRIETARY OF GLOBTEK, INC. ANY REPRODUCTION, DISCLOSURE OR USE OF THIS DRAWING, IN WHOLE OR IN PART, IS HEREBY PROHIBITED EXCEPT AS SPECIFIED IN WRITING BY GLOBTEK, INC. © GlobTek, Inc. 2017 - 2022
guest /08/27/2022 12:03:36 AM

GlobTek, Inc.
www.globtek.com
186 Veterans Drive,
Northvale, NJ 07647
Tel. (201) 784-1000
Fax (201) 784-0111

Drawing Title: GTM961200P10812-T3, ICT / ITE / Medical Power Supply, Efficiency Level: USA DOE Level VI / Eco-design Directive 2009/125/EC, (EU) 2019/1782, Case Color/Style: GlobTek Black, Desktop/External, Regulated Switchmode AC-DC Power Supply AC Adaptor, Input Rating: 100-240V~, 50-60 Hz, IEC 60320/C14 , Output Rating: 108W, 12.0V@9.0A, Output Configuration: 1200 mm, 14/1C + Shield Cond, UL 1185, Female Barrel 5.5 * 2.1 * 11 mm with internal Spring Clip and Locking Notch or Equal; Barrel rated for 10A, Ferrite: None, GlobTek Black, GT Cord # C48272, Pin Out: Center Positive (+V), symbol compliant with IEC 60417 symbol no. 5926, Blades/Input Cord: Not Applicable, Approvals: CB 61347; RCM; CCC; EAC; cETLus 60950-1; cETLus 60601-1-11; S-Mark 62368; IRAM; Malaysia; NOM (24V only); UKCA; Taiwan BSMI (12,15,18,19,24,48,54V only); Conforms to 62368-1; NrCAN (12V only); Morocco; Korea (24,25,26 and 27V Only); Korea (12V and 13V Only); ETL (Brazil); NOM (12V only); South Africa; India BIS (12,15,18,19,24,28,30,48 and 54V); Israel (24V only); Singapore (24V); ETL; S-Mark 60950; CB 60950; CB 60335; CB 62368; ETL; CB 60335; VCCI; CB 60601-1; S-Mark; WEEE; Ukraine; RoHS; ETL 62368; Level VI; China RoHS; CE; Class I; PSE; PSE; PSE;

Model No. GTM961200P10812-T3

Part No./Ordering No. TR9CE9000CCP-IM(R6B) Rev E2

REVISION HISTORY

REV	DESCRIPTION	SUB	DATE	APPROVED
E2	Add UKCA, Morocco approvals to the label, add models to NOM approval	QA	10/12/2021	QA
E1	Change O/P cord tolerance to ±100 mm	QA	05/27/2020	QA
E	Update O/P cord: remove ferrite from cord	QA	05/18/2020	QA
D	Update O/P connector drawing to Barrel rated for 10A	QA	01/29/2020	QA
C	Change engineering model from GTM961200P11012-T3 to GTM961200P10812-T3	QA	01/04/2018	QA
B	Update output cord from UL2468 to UL1185	rchiu	11/15/2017	QA
A	Initial Release	jwarn	05/02/2017	QA

POWER SUPPLY INFORMATION

TYPE:	Desktop/External
TECHNOLOGY:	Regulated Switchmode AC-DC Power Supply AC Adaptor
CASE COLOR:	GlobTek Black
NAMEPLATE RATED INPUT:	100-240V~, 50-60 Hz, 1.5 A
INPUT CONFIG:	IEC 60320/C14
WATTS:	108.0
VOLTS OUT:	12.0
CURRENT OUT (Amps):	9.0
BLADE/CORD INCLUDED:	N/A Not Applicable
BLADE/CORD INSTALLED:	N/A :Not Applicable
INGRESS PROTECTION:	IP41
GROUNDING CONFIGURATION:	(E1) Earthed output
EFFICIENCY LEVEL:	USA DOE Level VI / Eco-design Directive 2009/125/EC, (EU) 2019/1782
OUTPUT CONFIGURATION:	1200 mm, 14/1C + Shield Cond, UL 1185, Female Barrel 5.5 * 2.1 * 11 mm with internal Spring Clip and Locking Notch or Equal; Barrel rated for 10A, Ferrite: None, GlobTek Black, GT Cord # C48272
OVERMOLDED:	Yes
OUTPUT CONNECTOR GENDER:	Female
CONNECTOR PIN OUT:	Center Positive (+V), symbol compliant with IEC 60417 symbol no. 5926
LABEL SPECS:	ISO 15223 medical device compliant label,L-1470
SPECIAL BARCODE LABEL MATERIAL:	No
PACK SPEC:	Standard DT, Cellular packaging, User manual
USER MANUAL:	809-DESKTOPUSERMANUAL on A4 paper

PROPRIETARY INFORMATION
PROPRIETARY OF GLOBTEK, INC. ANY REPRODUCTION, DISCLOSURE OR USE OF THIS DRAWING, IN WHOLE OR IN PART, IS HEREBY PROHIBITED EXCEPT AS SPECIFIED IN WRITING BY GLOBTEK, INC. © GlobTek, Inc. 2017 - 2022
guest /08/27/2022 12:03:36 AM

GlobTek, Inc.
www.globtek.com
186 Veterans Drive,
Northvale, NJ 07647
Tel. (201) 784-1000
Fax (201) 784-0111

Drawing Title: GTM961200P10812-T3, ICT / ITE / Medical Power Supply, Efficiency Level: USA DOE Level VI / Eco-design Directive 2009/125/EC, (EU) 2019/1782, Case Color/Style: GlobTek Black, Desktop/External, Regulated Switchmode AC-DC Power Supply AC Adaptor, Input Rating: 100-240V~, 50-60 Hz, IEC 60320/C14 , Output Rating: 108W, 12.0V@9.0A, Output Configuration: 1200 mm, 14/1C + Shield Cond, UL 1185, Female Barrel 5.5 * 2.1 * 11 mm with internal Spring Clip and Locking Notch or Equal; Barrel rated for 10A, Ferrite: None, GlobTek Black, GT Cord # C48272, Pin Out: Center Positive (+V), symbol compliant with IEC 60417 symbol no. 5926, Blades/Input Cord: Not Applicable, Approvals: CB 61347; RCM; CCC; EAC; cETLus 60950-1; cETLus 60601-1-11; S-Mark 62368; IRAM; Malaysia; NOM (24V only); UKCA; Taiwan BSMI (12,15,18,19,24,48,54V only); Conforms to 62368-1; NrCAN (12V only); Morocco; Korea (24,25,26 and 27V Only); Korea (12V and 13V Only); ETL (Brazil); NOM (12V only); South Africa; India BIS (12,15,18,19,24,28,30,48 and 54V); Israel (24V only); Singapore (24V); ETL; S-Mark 60950; CB 60950; CB 60335; CB 62368; ETL; CB 60335; VCCI; CB 60601-1; S-Mark; WEEE; Ukraine; RoHS; ETL 62368; Level VI; China RoHS; CE; Class I; PSE; PSE; PSE;	
Model No. GTM961200P10812-T3	
Part No./Ordering No. TR9CE9000CCP-IM(R6B)	Rev E2

Notes/Modifications/Customizations (notes in this section supersede the values shown in the standard spec):

DIMENSIONS ARE IN MM UNLESS SPECIFIED OTHERWISE.

PROPRIETARY INFORMATION
PROPRIETARY OF GLOBTEK, INC. ANY REPRODUCTION, DISCLOSURE OR USE OF THIS DRAWING, IN WHOLE OR IN PART, IS HEREBY PROHIBITED EXCEPT AS SPECIFIED IN WRITING BY GLOBTEK, INC. © GlobTek, Inc. 2017 - 2022
guest /08/27/2022 12:03:36 AM

GlobTek, Inc.
www.globtek.com
186 Veterans Drive,
Northvale, NJ 07647
Tel. (201) 784-1000
Fax (201) 784-0111

Drawing Title: GTM961200P10812-T3, ICT / ITE / Medical Power Supply, Efficiency Level: USA DOE Level VI / Eco-design Directive 2009/125/EC, (EU) 2019/1782, Case Color/Style: GlobTek Black, Desktop/External, Regulated Switchmode AC-DC Power Supply AC Adaptor, Input Rating: 100-240V~, 50-60 Hz, IEC 60320/C14 , Output Rating: 108W, 12.0V@9.0A, Output Configuration: 1200 mm, 14/1C + Shield Cond, UL 1185, Female Barrel 5.5 * 2.1 * 11 mm with internal Spring Clip and Locking Notch or Equal; Barrel rated for 10A, Ferrite: None, GlobTek Black, GT Cord # C48272, Pin Out: Center Positive (+V), symbol compliant with IEC 60417 symbol no. 5926, Blades/Input Cord: Not Applicable, Approvals: CB 61347; RCM; CCC; EAC; cETLus 60950-1; cETLus 60601-1-11; S-Mark 62368; IRAM; Malaysia; NOM (24V only); UKCA; Taiwan BSMI (12,15,18,19,24,48,54V only); Conforms to 62368-1; NrCAN (12V only); Morocco; Korea (24,25,26 and 27V Only); Korea (12V and 13V Only); ETL (Brazil); NOM (12V only); South Africa; India BIS (12,15,18,19,24,28,30,48 and 54V); Israel (24V only); Singapore (24V); ETL; S-Mark 60950; CB 60950; CB 60335; CB 62368; ETL; CB 60335; VCCI; CB 60601-1; S-Mark; WEEE; Ukraine; RoHS; ETL 62368; Level VI; China RoHS; CE; Class I; PSE; PSE; PSE;

Model No. GTM961200P10812-T3

Part No./Ordering No. TR9CE9000CCP-IM(R6B) Rev E2

ELECTRICAL SPECIFICATIONS

Input

Input Voltage:	Specified: 90-264VAC, Nameplate: 100-240VAC 100% rated load current for 90-264VAC 90% rated load current for 85-264VAC 100% rated load current for 90-370VDC
Input Frequency:	Specified: 47-63Hz, Nameplate: 50-60Hz
Power Factor:	0.90 min. @ 230VAC, 0.97 min. @ 115VAC
No Load Input Power:	< 150mW @ 115/230VAC
Inrush Current:	< 65A @ 115VAC, < 130A @ 230VAC (cold start)
Efficiency:	DoE Level VI and EU CoC Tier 2 compliant

Output

Turn-on Delay:	1 second typ.
Output Regulation:	± 4% (measured at output connector)
Line Regulation:	± 0.5% typ. (measured at output connector, full load)
Ripple:	1% or 200mV, whichever is greater (using a 47µF low-ESR cap + 0.1µF ceramic capacitor, measured @ 20MHz BW, at output connector)
Startup Overshoot:	5% max.
Transient Response:	5% max. deviation, 1ms typ. recovery time (with 25% to 50% load step)
Hold-up Time:	20ms min.
Power Indicator:	Green LED
Switching Frequency:	Variable, 25KHz - 125KHz, depending on load

Protections

Input Protection:	300VAC MOV transient suppressor, input line fusing
Over-Current Protection	Current limited to less than < 170W / $V_{out(nom.)}$ and < 13A, auto-restart
Short-Circuit Protection:	Auto-restart
Over-Voltage Protection:	110 - 135% (60V max for models rated 45 - 54V), full load condition, latched off, cycle AC to reset
Over-Temperature Protection	Internal ambient NTC temperature sensor, latched off, cycle AC to reset

Environmental

MTBF:	1,500,000 hours @ 25°C ambient, full load (Telcordia SR-332, Issue 3)
Operating Temperature:	-10°C to 40°C (full load)

PROPRIETARY INFORMATION
PROPRIETARY OF GLOBTEK, INC. ANY REPRODUCTION, DISCLOSURE OR USE OF THIS DRAWING, IN WHOLE OR IN PART, IS HEREBY PROHIBITED EXCEPT AS SPECIFIED IN WRITING BY GLOBTEK, INC. © GlobTek, Inc. 2017 - 2022
guest /08/27/2022 12:03:36 AM

Storage Temperature:	-30°C to 80°C
Humidity:	0% to 95% relative humidity, non-condensing
Altitude:	5000m
Cooling:	Convection
RoHS:	Complies with EU 2011/65/EU and China SJ/T 11363-2006
Note 1:	Regarding operating temperature a. See below de-rating table for output power capability at alternate temperature b. Extended low-end temperature range available as a custom option

Safety

Dielectric Withstand Voltage:	4000VAC or 5656VDC from input to output 3000VAC or 4242VDC from input to earth (Class I models only)
Touch Current:	Class I: 20µA max. Class II: 70µA max.
Earth Leakage Current	Class I: 300µA max. Class II: N/A
Means of Protection:	2 x MOPP
Output Isolation Options:	Class I: C6 or C14 inlet (output negative tied to Earth contact) Class II: C8 or C18 inlet Class II FE: C6 or C14 inlet (output isolated from Earth contact) Review isolation options by reading our white paper PSU Isolation and Identity.
Primary-to-Secondary Bridging Capacitors:	Two IEC60384-14 Class Y1 capacitors
Earth Continuity Test:	< 0.1Ω between earth pin (on AC inlet) and PCB termination point (Class I models only)
Compliant Standards:	See listing at end of this datasheet for specific standards

EMC

Applicable Standards:	Medical: EN60601-1-2, 4th edition Emissions: EN55032, EN61000-6-3, EN61000-6-4, CISPR11, CISPR22 Immunity: EN55024, EN61000-6-1, EN61000-6-2
Conducted Emissions:	Class B, FCC Part 15, Class B (with resistive load)
Radiated Emissions:	Class B, FCC Part 15, Class B (with resistive load)
Harmonic Current Voltage Distortion:	EN61000-3-2, Class A
Voltage Fluctuations/Flicker:	EN61000-3-3
Electrostatic Discharge (ESD) Immunity:	EN61000-4-2, 10KV contact discharge, 18KV air discharge
Radiated RF Immunity:	EN61000-4-3, 10V/m 80-1000MHz, 3V/m 1-2.7GHz, 80% 1KHz AM
EFT/Burst Immunity:	EN61000-4-4, 4KV/100kHz.
Line Surge Immunity:	EN61000-4-5, 2KV differential, 4KV common-mode
Conducted RF Immunity:	EN61000-4-6, 3VRMS, 80% 1KHz AM
Power Frequency Magnetic Field Immunity:	EN61000-4-8, 3A/m
Voltage Dip Immunity:	EN61000-4-11

PROPRIETARY INFORMATION
PROPRIETARY OF GLOBTEK, INC. ANY REPRODUCTION, DISCLOSURE OR USE OF THIS DRAWING, IN WHOLE OR IN PART, IS HEREBY PROHIBITED EXCEPT AS SPECIFIED IN WRITING BY GLOBTEK, INC. © GlobTek, Inc. 2017 - 2022
guest /08/27/2022 12:03:36 AM

Enclosure

Housing:	High impact plastic, 94V0 polycarbonate, non-vented
Size:	149.4 * 62.6 * 33.5mm, ± 1.0mm
AC Input Mechanical Options:	C6, C8, C14, or C18 IEC inlet
Markings:	Label and/or pad printed and/or laser-etched into case

Special Options

1. Reduced leakage current to meet IEC60601-1 Type-CF limits
2. Improved EN61000-4-5 line surge immunity (3KV differential, 5KV common-mode)
3. Reduced harmonic current levels for LED lighting (EN61000-3-2 Class C) for 85 - 120W load
4. Short term output surge capability for motors or other high peak current loads
5. Ruggedized construction with improved shock and vibration resistance
6. Compliance to IPC-600, IPC-610, IPC-6012 Class 2 or 3
7. Custom cordsets, special cordage and connector types
8. Custom housing markings
9. Custom housing/cordage colors
10. Tightened output voltage tolerance
11. Reduced output ripple level
12. Reduced output power rating
13. Low temperature option, down to -40°C
14. Epoxy potted version "P2" or "P3" suffix, with flying wires or custom cables
15. "Back EMF" upgrade, for motor loads and other high inductance applications with reverse energy flow requirements
16. Improved ingress protection (IP) rating

Output Connectors

- Several output connector options are available with various output current ratings. GlobTek can supply 10A rated 2.1mm and 2.5mm style DC Power Jacks, to complement our 10A output rated 2.1mm and 2.5mm DC power plugs used on our output cordsets.
- Please visit our real-time listing of mating connector product offering: https://en.globtek.com/news/high-current-coaxial-barrel-plug-jacks-for-high-wattage-power-supplies

TO ADDRESS SYSTEM-LEVEL EMI CONCERNS, FERRITE CHOKES/BEADS MAY BE ADDED/REVISED UPON REQUEST. A SAMPLE KIT OF GLOBTEK'S STANDARD FERRITES IS AVAILABLE UNDER GLOBTEK P/N: EMI-MITIGATION-KIT1

FOR ADDITIONAL INFORMATION, PLEASE READ OUR WHITE PAPER AT:
https://en.globtek.com/technical-articles/ferrite-kit-radiated-emi-suppression-kit-for-globtek-power-supplies-cable-assemblies

PROPRIETARY INFORMATION
PROPRIETARY OF GLOBTEK, INC. ANY REPRODUCTION, DISCLOSURE OR USE OF THIS DRAWING, IN WHOLE OR IN PART, IS HEREBY PROHIBITED EXCEPT AS SPECIFIED IN WRITING BY GLOBTEK, INC. © GlobTek, Inc. 2017 - 2022
guest /08/27/2022 12:03:36 AM

GlobTek, Inc.
www.globtek.com
186 Veterans Drive,
Northvale, NJ 07647
Tel. (201) 784-1000
Fax (201) 784-0111

Drawing Title: GTM961200P10812-T3, ICT / ITE / Medical Power Supply, Efficiency Level: USA DOE Level VI / Eco-design Directive 2009/125/EC, (EU) 2019/1782, Case Color/Style: GlobTek Black, Desktop/External, Regulated Switchmode AC-DC Power Supply AC Adaptor, Input Rating: 100-240V~, 50-60 Hz, IEC 60320/C14 , Output Rating: 108W, 12.0V@9.0A, Output Configuration: 1200 mm, 14/1C + Shield Cond, UL 1185, Female Barrel 5.5 * 2.1 * 11 mm with internal Spring Clip and Locking Notch or Equal; Barrel rated for 10A, Ferrite: None, GlobTek Black, GT Cord # C48272, Pin Out: Center Positive (+V), symbol compliant with IEC 60417 symbol no. 5926, Blades/Input Cord: Not Applicable, Approvals: CB 61347; RCM; CCC; EAC; cETLus 60950-1; cETLus 60601-1-11; S-Mark 62368; IRAM; Malaysia; NOM (24V only); UKCA; Taiwan BSMI (12,15,18,19,24,48,54V only); Conforms to 62368-1; NrCAN (12V only); Morocco; Korea (24,25,26 and 27V Only); Korea (12V and 13V Only); ETL (Brazil); NOM (12V only); South Africa; India BIS (12,15,18,19,24,28,30,48 and 54V); Israel (24V only); Singapore (24V); ETL; S-Mark 60950; CB 60950; CB 60335; CB 62368; ETL; CB 60335; VCCI; CB 60601-1; S-Mark; WEEE; Ukraine; RoHS; ETL 62368; Level VI; China RoHS; CE; Class I; PSE; PSE; PSE;	
Model No. GTM961200P10812-T3	
Part No./Ordering No. TR9CE9000CCP-IM(R6B)	Rev E2

INGRESS PROTECTION: IP41

PROPRIETARY INFORMATION
PROPRIETARY OF GLOBTEK, INC. ANY REPRODUCTION, DISCLOSURE OR USE OF THIS DRAWING, IN WHOLE OR IN PART, IS HEREBY PROHIBITED EXCEPT AS SPECIFIED IN WRITING BY GLOBTEK, INC. © GlobTek, Inc. 2017 - 2022
guest /08/27/2022 12:03:36 AM

GlobTek, Inc.
www.globtek.com
186 Veterans Drive,
Northvale, NJ 07647
Tel. (201) 784-1000
Fax (201) 784-0111

Drawing Title: GTM961200P10812-T3, ICT / ITE / Medical Power Supply, Efficiency Level: USA DOE Level VI / Eco-design Directive 2009/125/EC, (EU) 2019/1782, Case Color/Style: GlobTek Black, Desktop/External, Regulated Switchmode AC-DC Power Supply AC Adaptor, Input Rating: 100-240V~, 50-60 Hz, IEC 60320/C14 , Output Rating: 108W, 12.0V@9.0A, Output Configuration: 1200 mm, 14/1C + Shield Cond, UL 1185, Female Barrel 5.5 * 2.1 * 11 mm with internal Spring Clip and Locking Notch or Equal; Barrel rated for 10A, Ferrite: None, GlobTek Black, GT Cord # C48272, Pin Out: Center Positive (+V), symbol compliant with IEC 60417 symbol no. 5926, Blades/Input Cord: Not Applicable, Approvals: CB 61347; RCM; CCC; EAC; cETLus 60950-1; cETLus 60601-1-11; S-Mark 62368; IRAM; Malaysia; NOM (24V only); UKCA; Taiwan BSMI (12,15,18,19,24,48,54V only); Conforms to 62368-1; NrCAN (12V only); Morocco; Korea (24,25,26 and 27V Only); Korea (12V and 13V Only); ETL (Brazil); NOM (12V only); South Africa; India BIS (12,15,18,19,24,28,30,48 and 54V); Israel (24V only); Singapore (24V); ETL; S-Mark 60950; CB 60950; CB 60335; CB 62368; ETL; CB 60335; VCCI; CB 60601-1; S-Mark; WEEE; Ukraine; RoHS; ETL 62368; Level VI; China RoHS; CE; Class I; PSE; PSE; PSE;

Model No. GTM961200P10812-T3

Part No./Ordering No. TR9CE9000CCP-IM(R6B) Rev E2

3D File Download https://www.globtek.com/dl/GTM96900-GTM961200-T3.igs

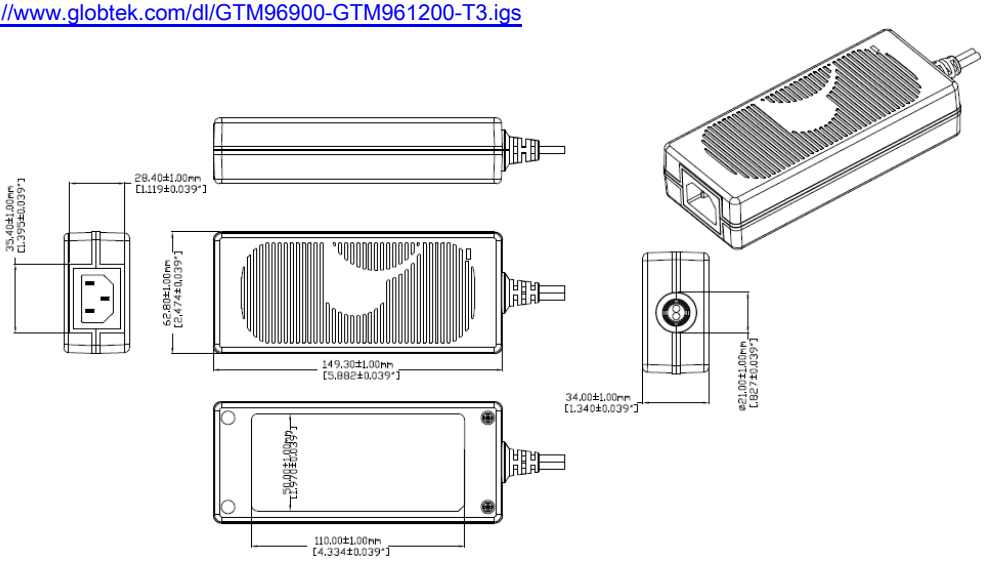

Alternative housing with input cord clamp to prevent accidental removal of the power cord. Product PN# ends with suffix "CL"

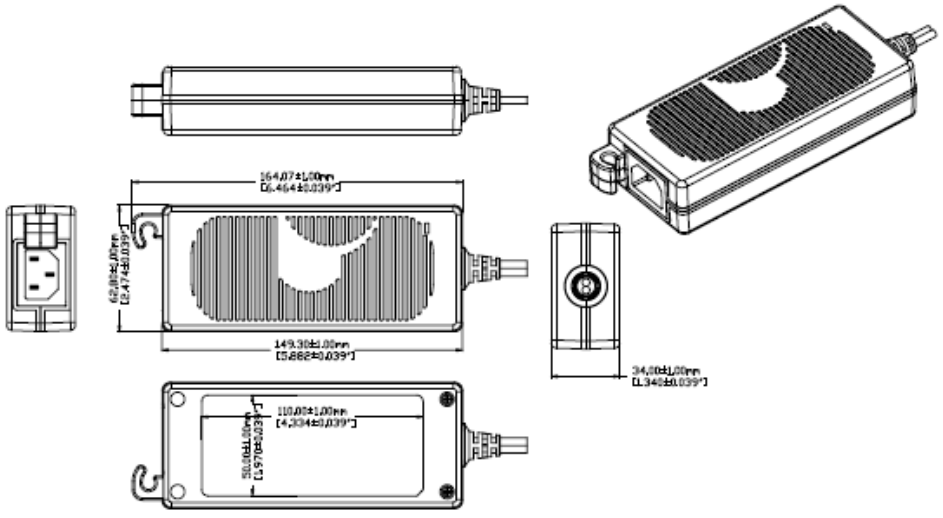

PROPRIETARY INFORMATION
PROPRIETARY OF GLOBTEK, INC. ANY REPRODUCTION, DISCLOSURE OR USE OF THIS DRAWING, IN WHOLE OR IN PART, IS HEREBY PROHIBITED EXCEPT AS SPECIFIED IN WRITING BY GLOBTEK, INC. © GlobTek, Inc. 2017 - 2022
guest /08/27/2022 12:03:36 AM

GlobTek, Inc.
www.globtek.com
186 Veterans Drive,
Northvale, NJ 07647
Tel. (201) 784-1000
Fax (201) 784-0111

Drawing Title: GTM961200P10812-T3, ICT / ITE / Medical Power Supply, Efficiency Level: USA DOE Level VI / Eco-design Directive 2009/125/EC, (EU) 2019/1782, Case Color/Style: GlobTek Black, Desktop/External, Regulated Switchmode AC-DC Power Supply AC Adaptor, Input Rating: 100-240V~, 50-60 Hz, IEC 60320/C14 , Output Rating: 108W, 12.0V@9.0A, Output Configuration: 1200 mm, 14/1C + Shield Cond, UL 1185, Female Barrel 5.5 * 2.1 * 11 mm with internal Spring Clip and Locking Notch or Equal; Barrel rated for 10A, Ferrite: None, GlobTek Black, GT Cord # C48272, Pin Out: Center Positive (+V), symbol compliant with IEC 60417 symbol no. 5926, Blades/Input Cord: Not Applicable, Approvals: CB 61347; RCM; CCC; EAC; cETLus 60950-1; cETLus 60601-1-11; S-Mark 62368; IRAM; Malaysia; NOM (24V only); UKCA; Taiwan BSMI (12,15,18,19,24,48,54V only); Conforms to 62368-1; NrCAN (12V only); Morocco; Korea (24,25,26 and 27V Only); Korea (12V and 13V Only); ETL (Brazil); NOM (12V only); South Africa; India BIS (12,15,18,19,24,28,30,48 and 54V); Israel (24V only); Singapore (24V); ETL; S-Mark 60950; CB 60950; CB 60335; CB 62368; ETL; CB 60335; VCCI; CB 60601-1; S-Mark; WEEE; Ukraine; RoHS; ETL 62368; Level VI; China RoHS; CE; Class I; PSE; PSE; PSE;

Model No. GTM961200P10812-T3

Part No./Ordering No. TR9CE9000CCP-IM(R6B) Rev E2

DERATING CURVE

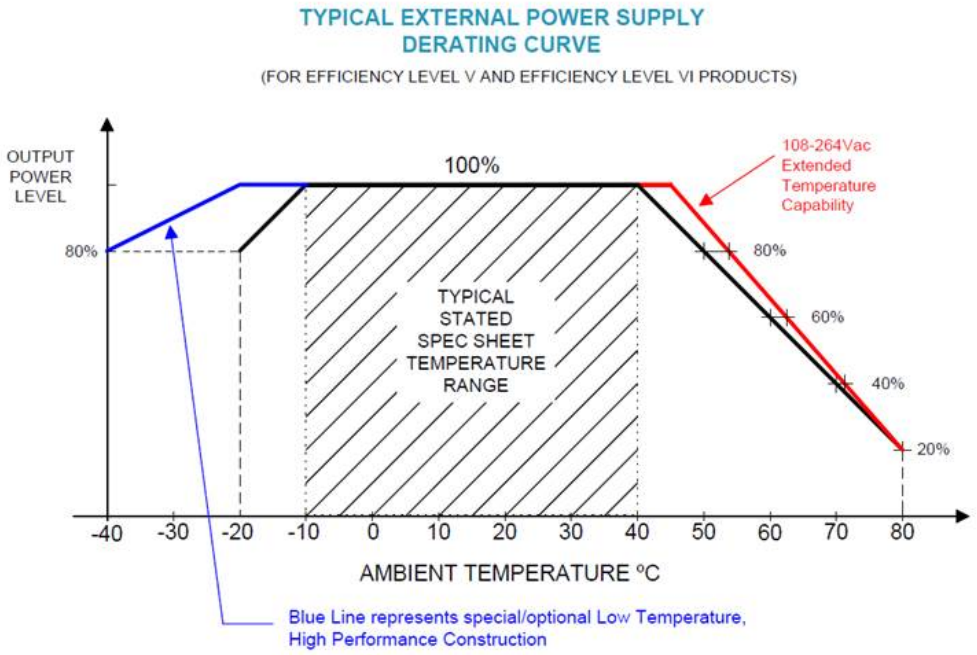

PROPRIETARY INFORMATION
PROPRIETARY OF GLOBTEK, INC. ANY REPRODUCTION, DISCLOSURE OR USE OF THIS DRAWING, IN WHOLE OR IN PART, IS HEREBY PROHIBITED EXCEPT AS SPECIFIED IN WRITING BY GLOBTEK, INC. © GlobTek, Inc. 2017 - 2022
guest /08/27/2022 12:03:36 AM

GlobTek, Inc.
www.globtek.com
186 Veterans Drive,
Northvale, NJ 07647
Tel. (201) 784-1000
Fax (201) 784-0111

Drawing Title: GTM961200P10812-T3, ICT / ITE / Medical Power Supply, Efficiency Level: USA DOE Level VI / Eco-design Directive 2009/125/EC, (EU) 2019/1782, Case Color/Style: GlobTek Black, Desktop/External, Regulated Switchmode AC-DC Power Supply AC Adaptor, Input Rating: 100-240V~, 50-60 Hz, IEC 60320/C14 , Output Rating: 108W, 12.0V@9.0A, Output Configuration: 1200 mm, 14/1C + Shield Cond, UL 1185, Female Barrel 5.5 * 2.1 * 11 mm with internal Spring Clip and Locking Notch or Equal; Barrel rated for 10A, Ferrite: None, GlobTek Black, GT Cord # C48272, Pin Out: Center Positive (+V), symbol compliant with IEC 60417 symbol no. 5926, Blades/Input Cord: Not Applicable, Approvals: CB 61347; RCM; CCC; EAC; cETLus 60950-1; cETLus 60601-1-11; S-Mark 62368; IRAM; Malaysia; NOM (24V only); UKCA; Taiwan BSMI (12,15,18,19,24,48,54V only); Conforms to 62368-1; NrCAN (12V only); Morocco; Korea (24,25,26 and 27V Only); Korea (12V and 13V Only); ETL (Brazil); NOM (12V only); South Africa; India BIS (12,15,18,19,24,28,30,48 and 54V); Israel (24V only); Singapore (24V); ETL; S-Mark 60950; CB 60950; CB 60335; CB 62368; ETL; CB 60335; VCCI; CB 60601-1; S-Mark; WEEE; Ukraine; RoHS; ETL 62368; Level VI; China RoHS; CE; Class I; PSE; PSE; PSE;	
Model No. GTM961200P10812-T3	
Part No./Ordering No. TR9CE9000CCP-IM(R6B)	Rev E2

INPUT CONFIGURATION

(E1) Earthed output

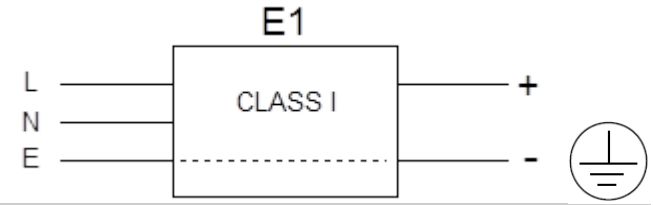

Alternate grounding configurations available upon request.

Blades/Cord Included:N/A:Not Applicable

Blades/Cord Installed:N/A:Not Applicable

IEC 60320/C14 AC Inlet Connector, Class I, Earth Ground

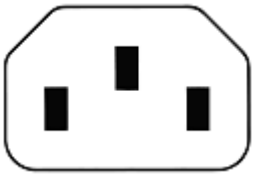

Mates with IEC 60320/C13 Plug

Optional Locking IEC60320 Receptable and cord option available on some models by request.:



Standard International IEC 320/C13 Cordsets

Below are standard cordsets which are "not included" (unless stated above); these can be purchased separately or packaged with the power supply. Contact your Sales Engineer if the style required is not shown below. Many more available in different lengths, colors or cable material.

PROPRIETARY INFORMATION
PROPRIETARY OF GLOBTEK, INC. ANY REPRODUCTION, DISCLOSURE OR USE OF THIS DRAWING, IN WHOLE OR IN PART, IS HEREBY PROHIBITED EXCEPT AS SPECIFIED IN WRITING BY GLOBTEK, INC. © GlobTek, Inc. 2017 - 2022
guest /08/27/2022 12:03:36 AM

GlobTek, Inc.
www.globtek.com
186 Veterans Drive,
Northvale, NJ 07647
Tel. (201) 784-1000
Fax (201) 784-0111

Drawing Title: GTM961200P10812-T3, ICT / ITE / Medical Power Supply, Efficiency Level: USA DOE Level VI / Eco-design Directive 2009/125/EC, (EU) 2019/1782, Case Color/Style: GlobTek Black, Desktop/External, Regulated Switchmode AC-DC Power Supply AC Adaptor, Input Rating: 100-240V~, 50-60 Hz, IEC 60320/C14 , Output Rating: 108W, 12.0V@9.0A, Output Configuration: 1200 mm, 14/1C + Shield Cond, UL 1185, Female Barrel 5.5 * 2.1 * 11 mm with internal Spring Clip and Locking Notch or Equal; Barrel rated for 10A, Ferrite: None, GlobTek Black, GT Cord # C48272, Pin Out: Center Positive (+V), symbol compliant with IEC 60417 symbol no. 5926, Blades/Input Cord: Not Applicable, Approvals: CB 61347; RCM; CCC; EAC; cETLus 60950-1; cETLus 60601-1-11; S-Mark 62368; IRAM; Malaysia; NOM (24V only); UKCA; Taiwan BSMI (12,15,18,19,24,48,54V only); Conforms to 62368-1; NrCAN (12V only); Morocco; Korea (24,25,26 and 27V Only); Korea (12V and 13V Only); ETL (Brazil); NOM (12V only); South Africa; India BIS (12,15,18,19,24,28,30,48 and 54V); Israel (24V only); Singapore (24V); ETL; S-Mark 60950; CB 60950; CB 60335; CB 62368; ETL; CB 60335; VCCI; CB 60601-1; S-Mark; WEEE; Ukraine; RoHS; ETL 62368; Level VI; China RoHS; CE; Class I; PSE; PSE; PSE;

Model No. GTM961200P10812-T3

Part No./Ordering No. TR9CE9000CCP-IM(R6B) Rev E2

Stock Power Supply Cords

Part Number/ Link	Country	Plug	Termination	Length (mm)	(Ft)
3021457F701(R)	N. American (Type B)	NEMA 5-15P	IEC 320/C13	2150	7
1191068F0701(R)	N. American (Type B)	NEMA 5-15P Hospital	IEC 320/C13	2459	8
2194272M5701-T(R)	Argentina (Type I)	IRAM 2073	IEC 320/C13	2500	8
5502022M5701A(R)	Australian (Type I)	AS3112 / 3 PRONG	IEC 320/C13	2500	8
204B4272M5701(R)	Brazil (Type N)	BRAZIL	IEC 320/C13	2500	8
6023602M5701(R)	China (Type I)	CCC GR2099	IEC 320/C13	2500	8
G8014272M5701(R)	Danish (Type K)	AFSNIT SECTION 107-2-D1	IEC 320/C13	2500	8
23144272M5701-T(R)	Europe (Type E)	CEE 7/7	IEC 320/C13	2500	8
23134272M5701EUKR(R)	Europe/Korea Combo (Type E)	CEE 7/7 / KSC8305	IEC 320/C13	2500	8
205IN4272M5701(R)	India (Type D)	India IS 1293 (also known as IA16A3 or BS546)	IEC 320/C13	2500	8
208IN4272M5701(R)	India (Type M)	India IS 1293 (also known as IA16A3 or BS546)	IEC320/C13	2500	8
377C4272M5701(R)	Israel (Type H)	ISL 377C	IEC 320/C13	2500	8
23024272M5701(R)	Italy (Type L)	CEI 23-16/VII	IEC 320/C13	2500	8
3003339F701(R) [3x1.25mm2] 3003068F2701-HK(R) [3 x 2.0mm2]	Japan (Type B)	JIS 8303 / 3 PINS	IEC 320/C13	2500	8
302J115J6F0701J(R)	North America / Japan (Type B – 12A)	NEMA 5-15P (cULus approved), Japan JIS C 8303 (PSE Approved)	IEC 320/C13	1830	6
302J104J6F0701J(R)	North America / Japan (Type B – 15A)	NEMA 5-15P (cULus approved), Japan JIS C 8303 (PSE Approved)	IEC 320/C13	1830	6
302JT104J9F0701JT(R)	North America / Japan / Taiwan (Type B – 15A)	NEMA 5-15P (cULus approved), Japan JIS C 8303 (PSE Approved), Taiwan CNS 6797 (BSMI Approved)	IEC 320/C13	2800	9
2313K3432M5701(R)	Korea (Type F)	KS C 8305	IEC 320/C13	2500	8

PROPRIETARY INFORMATION
PROPRIETARY OF GLOBTEK, INC. ANY REPRODUCTION, DISCLOSURE OR USE OF THIS DRAWING, IN WHOLE OR IN PART, IS HEREBY PROHIBITED EXCEPT AS SPECIFIED IN WRITING BY GLOBTEK, INC. © GlobTek, Inc. 2017 - 2022
guest /08/27/2022 12:03:36 AM

5804272M5701(R)	Russia (Type F)	GOST 7396	IEC 320/C13	2500	8
2084272M5701(R)	South Africa (Type M)	South Africa SABS164-1 (16A type)	IEC 320/C13	2500	8
23214272M5701(R)	Switzerland (Type J)	SEV 1011	IEC 320/C13	2500	8
3003322M5701(R)	Taiwan (Type B)	BSMI	IEC 320/C13	2500	8
6363762M5701(R)	Thailand (Type O)	TIS 166-2549	IEC 320/C13	2500	8
PZ0800100-2M5BK13H(R	UK, Hong Kong,Singapore, Gulf States (Type G)	BS 1363A	IEC 320/C13	2500	8
7055002M5701A(R)	International	IEC 320 C14-C13	IEC 320/C13	2500	8

PROPRIETARY INFORMATION

PROPRIETARY OF GLOBTEK, INC. ANY REPRODUCTION, DISCLOSURE OR USE OF THIS DRAWING, IN WHOLE OR IN PART, IS HEREBY PROHIBITED EXCEPT AS SPECIFIED IN WRITING BY GLOBTEK, INC. © GlobTek, Inc. 2017 - 2022

guest /08/27/2022 12:03:36 AM

GlobTek, Inc.
www.globtek.com
186 Veterans Drive,
Northvale, NJ 07647
Tel. (201) 784-1000
Fax (201) 784-0111

Drawing Title: GTM961200P10812-T3, ICT / ITE / Medical Power Supply, Efficiency Level: USA DOE Level VI / Eco-design Directive 2009/125/EC, (EU) 2019/1782, Case Color/Style: GlobTek Black, Desktop/External, Regulated Switchmode AC-DC Power Supply AC Adaptor, Input Rating: 100-240V~, 50-60 Hz, IEC 60320/C14 , Output Rating: 108W, 12.0V@9.0A, Output Configuration: 1200 mm, 14/1C + Shield Cond, UL 1185, Female Barrel 5.5 * 2.1 * 11 mm with internal Spring Clip and Locking Notch or Equal; Barrel rated for 10A, Ferrite: None, GlobTek Black, GT Cord # C48272, Pin Out: Center Positive (+V), symbol compliant with IEC 60417 symbol no. 5926, Blades/Input Cord: Not Applicable, Approvals: CB 61347; RCM; CCC; EAC; cETLus 60950-1; cETLus 60601-1-11; S-Mark 62368; IRAM; Malaysia; NOM (24V only); UKCA; Taiwan BSMI (12,15,18,19,24,48,54V only); Conforms to 62368-1; NrCAN (12V only); Morocco; Korea (24,25,26 and 27V Only); Korea (12V and 13V Only); ETL (Brazil); NOM (12V only); South Africa; India BIS (12,15,18,19,24,28,30,48 and 54V); Israel (24V only); Singapore (24V); ETL; S-Mark 60950; CB 60950; CB 60335; CB 62368; ETL; CB 60335; VCCI; CB 60601-1; S-Mark; WEEE; Ukraine; RoHS; ETL 62368; Level VI; China RoHS; CE; Class I; PSE; PSE; PSE;

Model No. GTM961200P10812-T3

Part No./Ordering No. TR9CE9000CCP-IM(R6B) Rev E2

OUTPUT CORD AND CONNECTOR: L11CC-10A/C48272

ACTUAL CONNECTORS, OVERMOLDS, FERRITES MAY VARY SLIGHTLY FROM THE PICTURE BELOW

CABLE TYPE	UL 1185
CABLE LENGTH (mm)	1200
CABLE TOLERANCE (mm)	±100
WIRE GAUGE (AWG)	14
CONDUCTORS	1C + Shield
HANK DIMENSION (mm)	80 ± 10
CABLE / CONNECTOR OVERMOLD COLOR	GlobTek Black
FERRITE TYPE / DIMENSION	None
FERRITE # OF TURNS(Definition)	N/A
FERRITE DIMENSION FROM STRAIN RELIEF	N/A
FERRITE DIMENSION FROM PLUG	N/A
PLUG TYPE	Female Barrel 5.5 * 2.1 * 11 mm with internal Spring Clip and Locking Notch or Equal; Barrel rated for 10A
OUTPUT CONNECTOR GENDER	Female
OVERMOLDED	Yes
OVER MOLD ORIENTATION	Straight
CONNECTOR PIN OUT:	Center Positive (+V), symbol compliant with IEC 60417 symbol no. 5926
ADDITIONAL REQUIREMENTS	

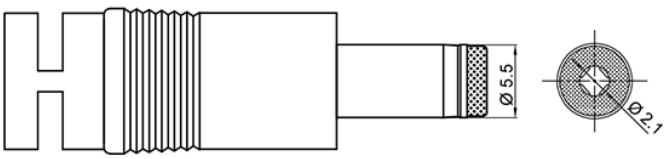

⚠ Barrel connector has Current rating of 10A

ADDITIONAL OUTPUT PLUG OPTIONS ARE AVAILABLE AT https://www.globtek.com/connectors/
STANDARD PLUGS AND CONNECTORS CAN BE SEEN ONLINE AT https://www.globtek.com/connectors/
CALCULATE VOLTAGE REGULATION/DROP WITH OUR ONLINE CALCULATOR: https://en.globtek.com/output-cable-regulation-calculator/

PROPRIETARY INFORMATION
PROPRIETARY OF GLOBTEK, INC. ANY REPRODUCTION, DISCLOSURE OR USE OF THIS DRAWING, IN WHOLE OR IN PART, IS HEREBY PROHIBITED EXCEPT AS SPECIFIED IN WRITING BY GLOBTEK, INC. © GlobTek, Inc. 2017 - 2022
guest /08/27/2022 12:03:36 AM

GlobTek, Inc.
www.globtek.com
186 Veterans Drive,
Northvale, NJ 07647
Tel. (201) 784-1000
Fax (201) 784-0111

Drawing Title: GTM961200P10812-T3, ICT / ITE / Medical Power Supply, Efficiency Level: USA DOE Level VI / Eco-design Directive 2009/125/EC, (EU) 2019/1782, Case Color/Style: GlobTek Black, Desktop/External, Regulated Switchmode AC-DC Power Supply AC Adaptor, Input Rating: 100-240V~, 50-60 Hz, IEC 60320/C14 , Output Rating: 108W, 12.0V@9.0A, Output Configuration: 1200 mm, 14/1C + Shield Cond, UL 1185, Female Barrel 5.5 * 2.1 * 11 mm with internal Spring Clip and Locking Notch or Equal; Barrel rated for 10A, Ferrite: None, GlobTek Black, GT Cord # C48272, Pin Out: Center Positive (+V), symbol compliant with IEC 60417 symbol no. 5926, Blades/Input Cord: Not Applicable, Approvals: CB 61347; RCM; CCC; EAC; cETLus 60950-1; cETLus 60601-1-11; S-Mark 62368; IRAM; Malaysia; NOM (24V only); UKCA; Taiwan BSMI (12,15,18,19,24,48,54V only); Conforms to 62368-1; NrCAN (12V only); Morocco; Korea (24,25,26 and 27V Only); Korea (12V and 13V Only); ETL (Brazil); NOM (12V only); South Africa; India BIS (12,15,18,19,24,28,30,48 and 54V); Israel (24V only); Singapore (24V); ETL; S-Mark 60950; CB 60950; CB 60335; CB 62368; ETL; CB 60335; VCCI; CB 60601-1; S-Mark; WEEE; Ukraine; RoHS; ETL 62368; Level VI; China RoHS; CE; Class I; PSE; PSE; PSE;	
Model No. GTM961200P10812-T3	
Part No./Ordering No. TR9CE9000CCP-IM(R6B)	Rev E2

OUTPUT CONNECTOR HOOK UP

TO ADDRESS SYSTEM-LEVEL EMI CONCERNS, FERRITE CHOKES/BEADS MAY BE ADDED/REVISED UPON REQUEST. A SAMPLE KIT OF GLOBTEK'S STANDARD FERRITES IS AVAILABLE UNDER GLOBTEK P/N: EMI-MITIGATION-KIT1

FOR ADDITIONAL INFORMATION, PLEASE READ OUR WHITE PAPER AT:
https://en.globtek.com/technical-articles/ferrite-kit-radiated-emi-suppression-kit-for-globtek-power-supplies-cable-assemblies

PROPRIETARY INFORMATION
PROPRIETARY OF GLOBTEK, INC. ANY REPRODUCTION, DISCLOSURE OR USE OF THIS DRAWING, IN WHOLE OR IN PART, IS HEREBY PROHIBITED EXCEPT AS SPECIFIED IN WRITING BY GLOBTEK, INC. © GlobTek, Inc. 2017 - 2022
guest /08/27/2022 12:03:36 AM

GlobTek, Inc. www.globtek.com 186 Veterans Drive, Northvale, NJ 07647 Tel. (201) 784-1000 Fax (201) 784-0111	Drawing Title: GTM961200P10812-T3, ICT / ITE / Medical Power Supply, Efficiency Level: USA DOE Level VI / Eco-design Directive 2009/125/EC, (EU) 2019/1782, Case Color/Style: GlobTek Black, Desktop/External, Regulated Switchmode AC-DC Power Supply AC Adaptor, Input Rating: 100-240V~, 50-60 Hz, IEC 60320/C14 , Output Rating: 108W, 12.0V@9.0A, Output Configuration: 1200 mm, 14/1C + Shield Cond, UL 1185, Female Barrel 5.5 * 2.1 * 11 mm with internal Spring Clip and Locking Notch or Equal; Barrel rated for 10A, Ferrite: None, GlobTek Black, GT Cord # C48272, Pin Out: Center Positive (+V), symbol compliant with IEC 60417 symbol no. 5926, Blades/Input Cord: Not Applicable, Approvals: CB 61347; RCM; CCC; EAC; cETLus 60950-1; cETLus 60601-1-11; S-Mark 62368; IRAM; Malaysia; NOM (24V only); UKCA; Taiwan BSMI (12,15,18,19,24,48,54V only); Conforms to 62368-1; NrCAN (12V only); Morocco; Korea (24,25,26 and 27V Only); Korea (12V and 13V Only); ETL (Brazil); NOM (12V only); South Africa; India BIS (12,15,18,19,24,28,30,48 and 54V); Israel (24V only); Singapore (24V); ETL; S-Mark 60950; CB 60950; CB 60335; CB 62368; ETL; CB 60335; VCCI; CB 60601-1; S-Mark; WEEE; Ukraine; RoHS; ETL 62368; Level VI; China RoHS; CE; Class I; PSE; PSE; PSE;	
	Model No. GTM961200P10812-T3	
	Part No./Ordering No. TR9CE9000CCP-IM(R6B)	Rev E2

LABEL:L-1470

LABEL P/N:	ISO 15223 medical device compliant label
MATERIAL:	Flat Thermal Transfer, Imprintable, Polyester Label and/or Pad Printed and/or Molded, and/or Laser Engraved in the case
BACKGROUND COLOR:	Black if housing is Black, White or Silver if housing is White or Gray.
TEXT COLOR:	White or Silver if label is Black Background for Black housing. Black if label is White or Silver background and Housing is White or Gray.
LABEL WIDTH (mm):	50
LABEL HEIGHT (mm):	110
SPECIAL BARCODE LABEL MATERIAL:	No

Below is the minimum information which will appear on the label. NOTE: in the logo area additional/actual positioning of symbols and text is subjected to change as per agency updates/requirements or additional model approvals become available.
Agency logos may be in Regulatory Certifications/Label Markings area on the label or molded into the case housing outside the label area. Information will be shown via Label and/or Pad Printed and/or Molded in the case.

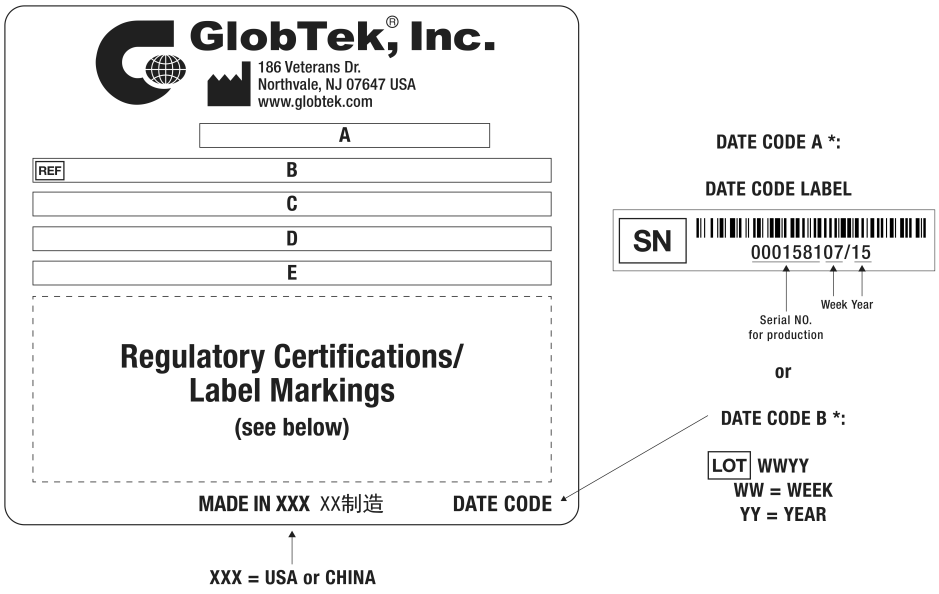

A=ICT / ITE / Medical Power Supply
B=P/N: (料号) TR9CE9000CCP-IM(R6B)
C=Model (型号) GTM961200P10812-T3
D=Input (输入)100-240V~, 50-60 Hz, 1.5 A
E=Output (输出)12.0 V ⎓ 9.0 A, 108.0W

PROPRIETARY INFORMATION
PROPRIETARY OF GLOBTEK, INC. ANY REPRODUCTION, DISCLOSURE OR USE OF THIS DRAWING, IN WHOLE OR IN PART, IS HEREBY PROHIBITED EXCEPT AS SPECIFIED IN WRITING BY GLOBTEK, INC. © GlobTek, Inc. 2017 - 2022
guest /08/27/2022 12:03:36 AM

GlobTek, Inc.
www.globtek.com
186 Veterans Drive,
Northvale, NJ 07647
Tel. (201) 784-1000
Fax (201) 784-0111

Drawing Title: GTM961200P10812-T3, ICT / ITE / Medical Power Supply, Efficiency Level: USA DOE Level VI / Eco-design Directive 2009/125/EC, (EU) 2019/1782, Case Color/Style: GlobTek Black, Desktop/External, Regulated Switchmode AC-DC Power Supply AC Adaptor, Input Rating: 100-240V~, 50-60 Hz, IEC 60320/C14 , Output Rating: 108W, 12.0V@9.0A, Output Configuration: 1200 mm, 14/1C + Shield Cond, UL 1185, Female Barrel 5.5 * 2.1 * 11 mm with internal Spring Clip and Locking Notch or Equal; Barrel rated for 10A, Ferrite: None, GlobTek Black, GT Cord # C48272, Pin Out: Center Positive (+V), symbol compliant with IEC 60417 symbol no. 5926, Blades/Input Cord: Not Applicable, Approvals: CB 61347; RCM; CCC; EAC; cETLus 60950-1; cETLus 60601-1-11; S-Mark 62368; IRAM; Malaysia; NOM (24V only); UKCA; Taiwan BSMI (12,15,18,19,24,48,54V only); Conforms to 62368-1; NrCAN (12V only); Morocco; Korea (24,25,26 and 27V Only); Korea (12V and 13V Only); ETL (Brazil); NOM (12V only); South Africa; India BIS (12,15,18,19,24,28,30,48 and 54V); Israel (24V only); Singapore (24V); ETL; S-Mark 60950; CB 60950; CB 60335; CB 62368; ETL; CB 60335; VCCI; CB 60601-1; S-Mark; WEEE; Ukraine; RoHS; ETL 62368; Level VI; China RoHS; CE; Class I; PSE; PSE; PSE;	
Model No. GTM961200P10812-T3	
Part No./Ordering No. TR9CE9000CCP-IM(R6B)	Rev E2

AGENCY ONLINE DOCUMENTS	http://www.globtek.info/certs/GTM961200P/
CE EC-Declaration for Medical	http://globtek.force.com/models/ec_declaration_product?id=01ta0000007dRFd&m=1
CE EC-Declaration for Industrial/Commercial/ITE	http://globtek.force.com/models/ec_declaration_product?id=01ta0000007dRFd&i=2
CE EC-Declaration for Household	Contact GlobTek for more information
UKCA-Declaration for Medical	http://globtek.force.com/models/ukca_declaration_product?id=01ta0000007dRFd&m=1
UKCA-Declaration for Industrial/Commercial/ITE	http://globtek.force.com/models/ukca_declaration_product?id=01ta0000007dRFd&i=2
UKCA-Declaration for Household	Contact GlobTek for more information
Morocco SDoC Declaration	https://globtek.secure.force.com/models/Morocco_SDoC_Declaration?id=a0Oa000000MjJKDEA3
RoHS/RoHS3 Declaration	https://www.globtek.com/pdf/rohs_cert/01ta0000007dRFdAAM
REACH Declaration	https://www.globtek.com/pdf/iso_certificates/REACH.pdf
Conflict Minerals Declaration	https://www.globtek.com/pdf/conflict-minerals.pdf
Prop 65 Statement	https://en.globtek.com/prop-65-statement.pdf

IPXY rating is based on 3rd party testing and customers should check suitability and test system level IPXY rating before ordering.

Regulatory Certifications/Label Markings

Below follows a link to the latest regulatory certifications and marks for this specific product. National standards as well as certification schemes are constantly changing and so is the set of certification marks and symbols applicable to this product. Various standards, marks and symbols, and certificates are subject to change at any time without notice.

Additional standards or unique country certifications are available upon request. Please contact Globtek to request a quotation.

LATEST PRODUCT/MODEL CERTIFICATIONS:	https://www.globtek.com/datasheet/w71078
AGENCY ONLINE DOCUMENTS:	http://www.globtek.info/certs/GTM961200P/
	(E1) Earthed output
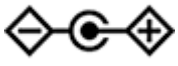	Center Positive (+V), symbol compliant with IEC 60417 symbol no. 5926

PROPRIETARY INFORMATION
PROPRIETARY OF GLOBTEK, INC. ANY REPRODUCTION, DISCLOSURE OR USE OF THIS DRAWING, IN WHOLE OR IN PART, IS HEREBY PROHIBITED EXCEPT AS SPECIFIED IN WRITING BY GLOBTEK, INC. © GlobTek, Inc. 2017 - 2022
guest /08/27/2022 12:03:36 AM

GlobTek, Inc.
www.globtek.com
186 Veterans Drive,
Northvale, NJ 07647
Tel. (201) 784-1000
Fax (201) 784-0111

Drawing Title: GTM961200P10812-T3, ICT / ITE / Medical Power Supply, Efficiency Level: USA DOE Level VI / Eco-design Directive 2009/125/EC, (EU) 2019/1782, Case Color/Style: GlobTek Black, Desktop/External, Regulated Switchmode AC-DC Power Supply AC Adaptor, Input Rating: 100-240V~, 50-60 Hz, IEC 60320/C14 , Output Rating: 108W, 12.0V@9.0A, Output Configuration: 1200 mm, 14/1C + Shield Cond, UL 1185, Female Barrel 5.5 * 2.1 * 11 mm with internal Spring Clip and Locking Notch or Equal; Barrel rated for 10A, Ferrite: None, GlobTek Black, GT Cord # C48272, Pin Out: Center Positive (+V), symbol compliant with IEC 60417 symbol no. 5926, Blades/Input Cord: Not Applicable, Approvals: CB 61347; RCM; CCC; EAC; cETLus 60950-1; cETLus 60601-1-11; S-Mark 62368; IRAM; Malaysia; NOM (24V only); UKCA; Taiwan BSMI (12,15,18,19,24,48,54V only); Conforms to 62368-1; NrCAN (12V only); Morocco; Korea (24,25,26 and 27V Only); Korea (12V and 13V Only); ETL (Brazil); NOM (12V only); South Africa; India BIS (12,15,18,19,24,28,30,48 and 54V); Israel (24V only); Singapore (24V); ETL; S-Mark 60950; CB 60950; CB 60335; CB 62368; ETL; CB 60335; VCCI; CB 60601-1; S-Mark; WEEE; Ukraine; RoHS; ETL 62368; Level VI; China RoHS; CE; Class I; PSE; PSE; PSE;	
Model No. GTM961200P10812-T3	
Part No./Ordering No. TR9CE9000CCP-IM(R6B)	Rev E2

PACKAGING

Packing Spec P/N:	Standard DT, Cellular packaging, User manual
Box Qty:	20
Gift Box Size (mm):	Egg Crate
Gift Box Color:	White
Master Carton Size (mm):	427 x 405 x 158
Master Carton Cubic Volume (m^3):	0.03
Master GW (Kg):	12.0 kg
BLADES INCLUDED:	N/A: Not Applicable
BLADE/CORD INSTALLED:	N/A: Not Applicable
USER MANUAL*:	809-DESKTOPUSERMANUAL on A4 paper
USER MANUAL WEB LINK:	https://en.globtek.com/pdf/809-DESKTOPUSERMANUAL.jpg

* This specification sheet is considered the user manual for all applications. It is expected that the buyer of this product will use it to formulate their own user manual for their end product and a user manual specifically for the power adapter is not usually required. If a user manual is not specifically listed above then none will be provided with this unit.

If specific packaging is required, this section must specify all requirements and note “no exceptions”. If this section does not specify packaging, it is subject to change without notice at GlobTek’s discretion.

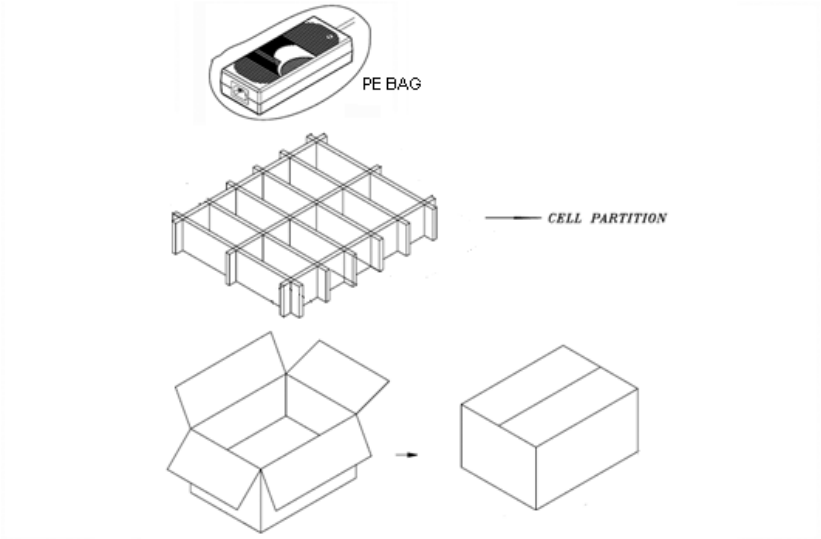

PROPRIETARY INFORMATION
PROPRIETARY OF GLOBTEK, INC. ANY REPRODUCTION, DISCLOSURE OR USE OF THIS DRAWING, IN WHOLE OR IN PART, IS HEREBY PROHIBITED EXCEPT AS SPECIFIED IN WRITING BY GLOBTEK, INC. © GlobTek, Inc. 2017 - 2022
guest /08/27/2022 12:03:36 AM

GlobTek, Inc.
www.globtek.com
186 Veterans Drive,
Northvale, NJ 07647
Tel. (201) 784-1000
Fax (201) 784-0111

Drawing Title: GTM961200P10812-T3, ICT / ITE / Medical Power Supply, Efficiency Level: USA DOE Level VI / Eco-design Directive 2009/125/EC, (EU) 2019/1782, Case Color/Style: GlobTek Black, Desktop/External, Regulated Switchmode AC-DC Power Supply AC Adaptor, Input Rating: 100-240V~, 50-60 Hz, IEC 60320/C14 , Output Rating: 108W, 12.0V@9.0A, Output Configuration: 1200 mm, 14/1C + Shield Cond, UL 1185, Female Barrel 5.5 * 2.1 * 11 mm with internal Spring Clip and Locking Notch or Equal; Barrel rated for 10A, Ferrite: None, GlobTek Black, GT Cord # C48272, Pin Out: Center Positive (+V), symbol compliant with IEC 60417 symbol no. 5926, Blades/Input Cord: Not Applicable, Approvals: CB 61347; RCM; CCC; EAC; cETLus 60950-1; cETLus 60601-1-11; S-Mark 62368; IRAM; Malaysia; NOM (24V only); UKCA; Taiwan BSMI (12,15,18,19,24,48,54V only); Conforms to 62368-1; NrCAN (12V only); Morocco; Korea (24,25,26 and 27V Only); Korea (12V and 13V Only); ETL (Brazil); NOM (12V only); South Africa; India BIS (12,15,18,19,24,28,30,48 and 54V); Israel (24V only); Singapore (24V); ETL; S-Mark 60950; CB 60950; CB 60335; CB 62368; ETL; CB 60335; VCCI; CB 60601-1; S-Mark; WEEE; Ukraine; RoHS; ETL 62368; Level VI; China RoHS; CE; Class I; PSE; PSE; PSE;	
Model No. GTM961200P10812-T3	
Part No./Ordering No. TR9CE9000CCP-IM(R6B)	Rev E2

PROPRIETARY INFORMATION
PROPRIETARY OF GLOBTEK, INC. ANY REPRODUCTION, DISCLOSURE OR USE OF THIS DRAWING, IN WHOLE OR IN PART, IS HEREBY PROHIBITED EXCEPT AS SPECIFIED IN WRITING BY GLOBTEK, INC. © GlobTek, Inc. 2017 - 2022
guest /08/27/2022 12:03:36 AM

GlobTek, Inc.
www.globtek.com
186 Veterans Drive,
Northvale, NJ 07647
Tel. (201) 784-1000
Fax (201) 784-0111

Drawing Title: GTM961200P10812-T3, ICT / ITE / Medical Power Supply, Efficiency Level: USA DOE Level VI / Eco-design Directive 2009/125/EC, (EU) 2019/1782, Case Color/Style: GlobTek Black, Desktop/External, Regulated Switchmode AC-DC Power Supply AC Adaptor, Input Rating: 100-240V~, 50-60 Hz, IEC 60320/C14 , Output Rating: 108W, 12.0V@9.0A, Output Configuration: 1200 mm, 14/1C + Shield Cond, UL 1185, Female Barrel 5.5 * 2.1 * 11 mm with internal Spring Clip and Locking Notch or Equal; Barrel rated for 10A, Ferrite: None, GlobTek Black, GT Cord # C48272, Pin Out: Center Positive (+V), symbol compliant with IEC 60417 symbol no. 5926, Blades/Input Cord: Not Applicable, Approvals: CB 61347; RCM; CCC; EAC; cETLus 60950-1; cETLus 60601-1-11; S-Mark 62368; IRAM; Malaysia; NOM (24V only); UKCA; Taiwan BSMI (12,15,18,19,24,48,54V only); Conforms to 62368-1; NrCAN (12V only); Morocco; Korea (24,25,26 and 27V Only); Korea (12V and 13V Only); ETL (Brazil); NOM (12V only); South Africa; India BIS (12,15,18,19,24,28,30,48 and 54V); Israel (24V only); Singapore (24V); ETL; S-Mark 60950; CB 60950; CB 60335; CB 62368; ETL; CB 60335; VCCI; CB 60601-1; S-Mark; WEEE; Ukraine; RoHS; ETL 62368; Level VI; China RoHS; CE; Class I; PSE; PSE; PSE;	
Model No. GTM961200P10812-T3	
Part No./Ordering No. TR9CE9000CCP-IM(R6B)	Rev E2

INSTRUCTIONS TO THE OEM SYSTEMS ENGINEER

It is the responsibility of the OEM systems engineer to provide the end system user instructions and warnings for the use of this product in the end system.

If an input cord is required for this product, AC Mains voltage should be provided to the power supply by a power supply cord approved to the national standards of the country in which it will be used.

This product is not designed to be repaired. No serviceable parts inside. A blown internal fuse is an indication of catastrophic failure of circuit component(s). If a Failure Analysis is required for a failed power supply/battery charger, please return the damaged unit to GlobTek for an accurate determination of the root cause of the failure.

EMC Compliance of the complete OEM product, including the GlobTek power supply/battery charger needs to be verified by the OEM systems engineer.

INSTRUCTION SHEET

N/A

PROPRIETARY INFORMATION
PROPRIETARY OF GLOBTEK, INC. ANY REPRODUCTION, DISCLOSURE OR USE OF THIS DRAWING, IN WHOLE OR IN PART, IS HEREBY PROHIBITED EXCEPT AS SPECIFIED IN WRITING BY GLOBTEK, INC. © GlobTek, Inc. 2017 - 2022
guest /08/27/2022 12:03:36 AM