MICRO SWITCH
FREEPORT, ILLINOIS, U.S.A.
A DIVISION OF HONEYWELL
FED. MFG. CODE 91929

SWITCH-BASIC

CATALOG LISTING
V3L-22
CQ-A2200

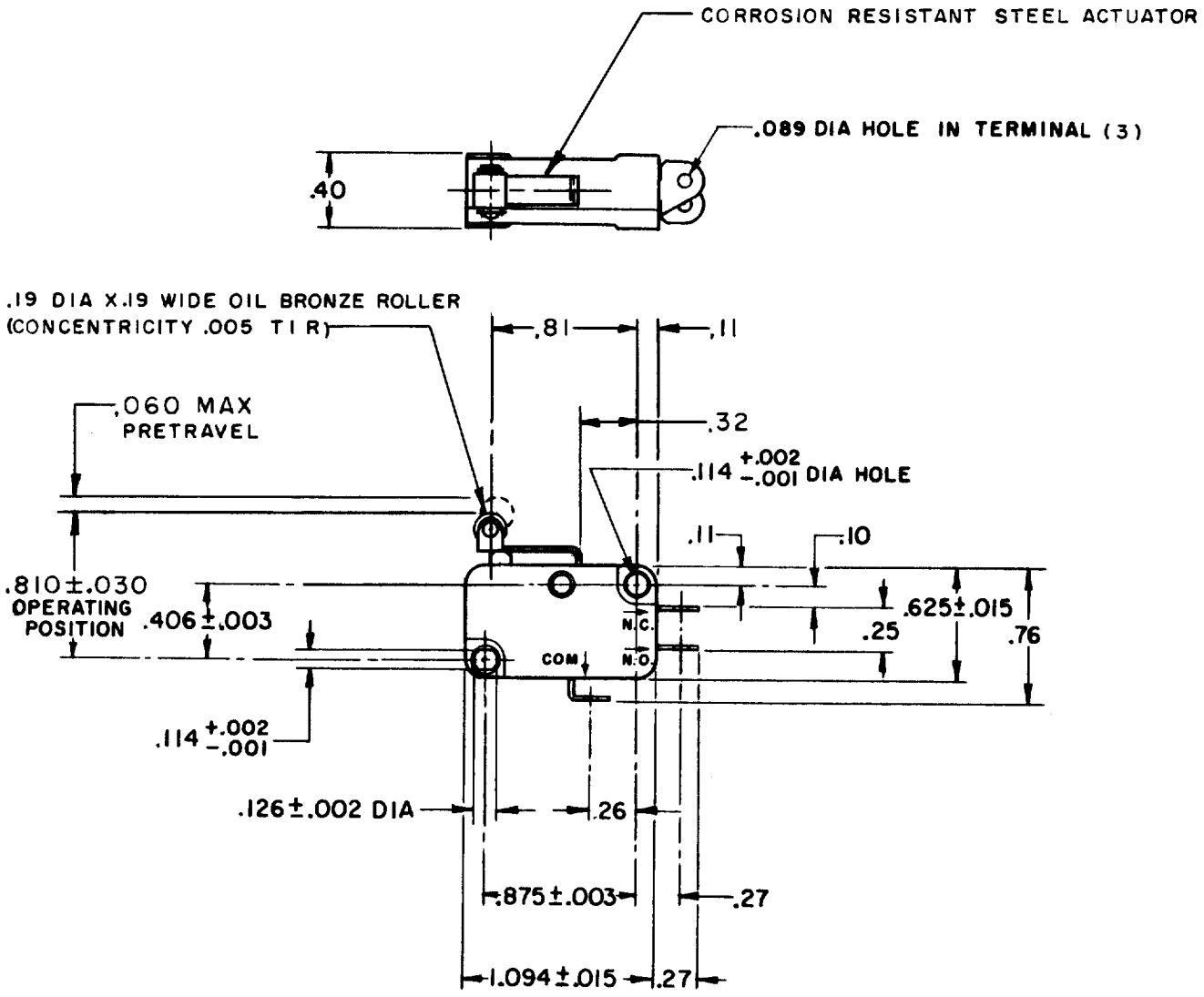

NOTE -
1 - TERMINALS ARE PLATED FOR SOLDERING

THIS DRAWING COVERS A PROPRIETARY ITEM AND IS THE PROPERTY OF MICRO SWITCH, A DIVISION OF HONEYWELL. THIS DRAWING IS NOT TO BE COPIED OR USED WITHOUT THE APPROVAL OF MICRO SWITCH.

CHARACTERISTICS

OPERATING FORCE	14 OZ MAX
RELEASE FORCE	3 OZ MIN
DIFFERENTIAL TRAVEL	.016 MAX
OVERTRAVEL	.040 MIN
RELEASE TRAVEL	.007 MIN

ELECTRICAL DATA

CONTACT ARRANGEMENT
S P D T

15.1A 1/2HP 125 OR 250 VAC L83
1/2A 125 VDC, 1/4A 250 VDC
5A 125 VAC "L"

SCALE FULL
DO NOT SCALE PRINT

UNLESS OTHERWISE NOTED
DIMENSIONS ARE IN INCHES
TOLERANCES ARE:

ONE PLACE	(.0)	±.030
TWO PLACE	(.00)	±.015
THREE PLACE	(.000)	±.005
ANGLES		±

WEIGHT

V3L-22 | M | DRAWING NUMBER | ISSUE X 4 | RELEASE NO. SR12837 | REPLACES

REVISIONS
A CO51609 R E R 22 JAN 73
B CO 36887 SMA 1 OCT 85
C CO-76305 J A L 30 NOV 93

DRAWN M B F 5 MAY 67 | CHECK LSD 8 MAY 67 | CHECK SCH 8 MAY 67

FC-50378