Never stop thinking

MOSFET

Metal Oxide Semiconductor Field Effect Transistor

CoolMOS C6

600V CoolMOS™ C6 Power Transistor
IPW60R070C6

Data Sheet

Rev. 2.1, 2010-02-09
Final

Industrial & Multimarket

1 Description

CoolMOS™ is a revolutionary technology for high voltage power MOSFETs, designed according to the superjunction (SJ) principle and pioneered by Infineon Technologies. CoolMOS™ C6 series combines the experience of the leading SJ MOSFET supplier with high class innovation. The offered devices provide all benefits of a fast switching SJ MOSFET while not sacrificing ease of use. Extremely low switching and conduction losses make switching applications even more efficient, more compact, lighter, and cooler.

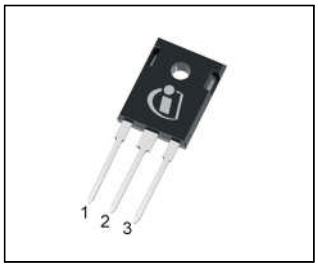

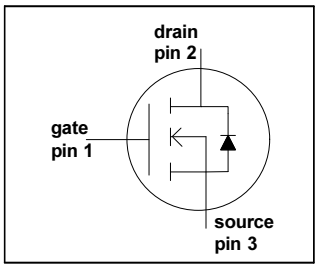

Features

- Extremely low losses due to very low FOM R_{dson}*Q_g and E_{oss}
- Very high commutation ruggedness
- Easy to use/drive
- JEDEC[1)] qualified, Pb-free plating, Halogen free

RoHS

Applications

PFC stages, hard switching PWM stages and resonant switching PWM stages for e.g. PC Silverbox, Adapter, LCD & PDP TV, Lighting, Server, Telecom and UPS.

Please note: For MOSFET paralleling the use of ferrite beads on the gate or separate totem poles is generally recommended.

Table 1 Key Performance Parameters

Parameter	Value	Unit
V_{DS} @ $T_{j,max}$	650	V
$R_{DS(on),max}$	0.07	Ω
$Q_{g,typ}$	170	nC
$I_{D,pulse}$	159	A
E_{oss} @ 400V	13	µJ
Body diode di/dt	300	A/µs

Related Links
IFX C6 Product Brief
IFX C6 Portfolio
IFX CoolMOS Webpage
IFX Design tools

Type	Package	Marking
IPW60R070C6	PG-TO247	6R070C6

1) J-STD20 and JESD22

Table of Contents

1 Description 2
Table of Contents 3
2 Maximum ratings 4
3 Thermal characteristics 4
4 Electrical characteristics 5
5 Electrical characteristics diagrams 7
6 Test circuits 11
7 Package outlines 12
8 Revision History 13

2 Maximum ratings

at T_j = 25 °C, unless otherwise specified.

Table 2 Maximum ratings

Parameter	Symbol	Values			Unit	Note / Test Condition
		Min.	Typ.	Max.		
Continuous drain current[1]	I_D	-	-	53	A	T_C= 25 °C
				34		T_C= 100°C
Pulsed drain current[2]	$I_{D,pulse}$	-	-	159	A	T_C=25 °C
Avalanche energy, single pulse	E_{AS}	-	-	1135	mJ	I_D=9.3 A, V_{DD}=50 V (see table 17)
Avalanche energy, repetitive	E_{AR}	-	-	1.72		I_D=9.3 A, V_{DD}=50 V
Avalanche current, repetitive	I_{AR}	-	-	9.3	A	
MOSFET dv/dt ruggedness	dv/dt	-	-	50	V/ns	V_{DS}=0...480 V
Gate source voltage	V_{GS}	-20	-	20	V	static
		-30		30		AC (f>1 Hz)
Power dissipation	P_{tot}	-	-	391	W	T_C=25 °C
Operating and storage temperature	T_j, T_{stg}	-55	-	150	°C	
Mounting torque		-	-	60	Ncm	M3 and M3.5 screws
Continuous diode forward current	I_S	-	-	46	A	T_C=25 °C
Diode pulse current[2]	$I_{S,pulse}$	-	-	159	A	T_C=25 °C
Reverse diode dv/dt[3]	dv/dt	-	-	15	V/ns	V_{DS}=0...400 V, $I_{SD} \leq I_D$, T_j=25 °C
Maximum diode commutation speed[3]	di_f/dt	-	-	300	A/µs	(see table 18)

1) Limited by $T_{j,max.}$ Maximum duty cycle D=0.75
2) Pulse width t_p limited by $T_{j,max}$
3) Identical low side and high side switch with identical R_G

3 Thermal characteristics

Table 3 Thermal characteristics TO-247 (IPW60R070C6)

Parameter	Symbol	Values			Unit	Note / Test Condition
		Min.	Typ.	Max.		
Thermal resistance, junction - case	R_{thJC}	-	-	0.32	°C/W	
Thermal resistance, junction - ambient	R_{thJA}	-	-	62		leaded
Soldering temperature, wavesoldering only allowed at leads	T_{sold}	-	-	260	°C	1.6 mm (0.063 in.) from case for 10 s

4 Electrical characteristics

Electrical characteristics, at T_j=25 °C, unless otherwise specified.

Table 4 Static characteristics

Parameter	Symbol	Values			Unit	Note / Test Condition
		Min.	Typ.	Max.		
Drain-source breakdown voltage	$V_{(BR)DSS}$	600	-	-	V	V_{GS}=0 V, I_D=0.25 mA
Gate threshold voltage	$V_{GS(th)}$	2.5	3	3.5		V_{DS}=V_{GS}, I_D=1.72 mA
Zero gate voltage drain current	I_{DSS}	-	-	5	µA	V_{DS}=600 V, V_{GS}=0 V, T_j=25 °C
		-	50	-		V_{DS}=600 V, V_{GS}=0 V, T_j=150 °C
Gate-source leakage current	I_{GSS}	-	-	100	nA	V_{GS}=20 V, V_{DS}=0 V
Drain-source on-state resistance	$R_{DS(on)}$	-	0.063	0.07	Ω	V_{GS}=10 V, I_D=25.8 A, T_j=25 °C
		-	0.164	-		V_{GS}=10 V, I_D=25.8 A, T_j=150 °C
Gate resistance	R_G	-	0.85	-	Ω	f=1 MHz, open drain

Table 5 Dynamic characteristics

Parameter	Symbol	Values			Unit	Note / Test Condition
		Min.	Typ.	Max.		
Input capacitance	C_{iss}	-	3800	-	pF	V_{GS}=0 V, V_{DS}=100 V, f=1 MHz
Output capacitance	C_{oss}	-	215	-		
Effective output capacitance, energy related[1)]	$C_{o(er)}$	-	140	-		V_{GS}=0 V, V_{DS}=0...480 V
Effective output capacitance, time related[2)]	$C_{o(tr)}$	-	710	-		I_D=constant, V_{GS}=0 V V_{DS}=0...480V
Turn-on delay time	$t_{d(on)}$	-	16	-	ns	V_{DD}=400 V, V_{GS}=13 V, I_D=25.8A, R_G= 1.7Ω (see table 16
Rise time	t_r	-	12	-		
Turn-off delay time	$t_{d(off)}$	-	83	-		
Fall time	t_f	-	5	-		

1) $C_{o(er)}$ is a fixed capacitance that gives the same stored energy as C_{oss} while V_{DS} is rising from 0 to 80% $V_{(BR)DSS}$

2) $C_{o(tr)}$ is a fixed capacitance that gives the same charging time as C_{oss} while V_{DS} is rising from 0 to 80% $V_{(BR)DSS}$

Table 6 Gate charge characteristics

Parameter	Symbol	Values			Unit	Note / Test Condition
		Min.	Typ.	Max.		
Gate to source charge	Q_{gs}	-	21	-	nC	V_{DD}=480 V, I_D=25.8 A, V_{GS}=0 to 10 V
Gate to drain charge	Q_{gd}	-	87	-		
Gate charge total	Q_g	-	170	-		
Gate plateau voltage	$V_{plateau}$	-	5.4	-	V	

Table 7 Reverse diode characteristics

Parameter	Symbol	Values			Unit	Note / Test Condition
		Min.	Typ.	Max.		
Diode forward voltage	V_{SD}	-	0.9	-	V	V_{GS}=0 V, I_F=25.8 A, T_j=25 °C
Reverse recovery time	t_{rr}	-	720	-	ns	V_R=400 V, I_F=25.8 A, di_F/dt=100 A/µs (see table 18)
Reverse recovery charge	Q_{rr}	-	19	-	µC	
Peak reverse recovery current	I_{rrm}	-	52	-	A	

5 Electrical characteristics diagrams

Table 8

Power dissipation	Max. transient thermal impedance
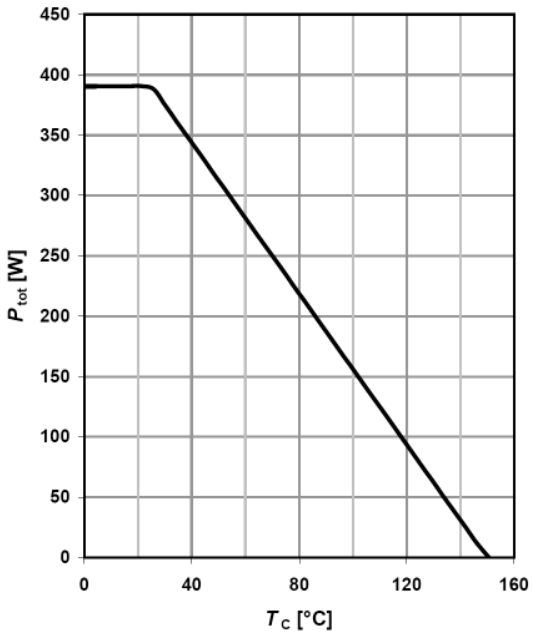	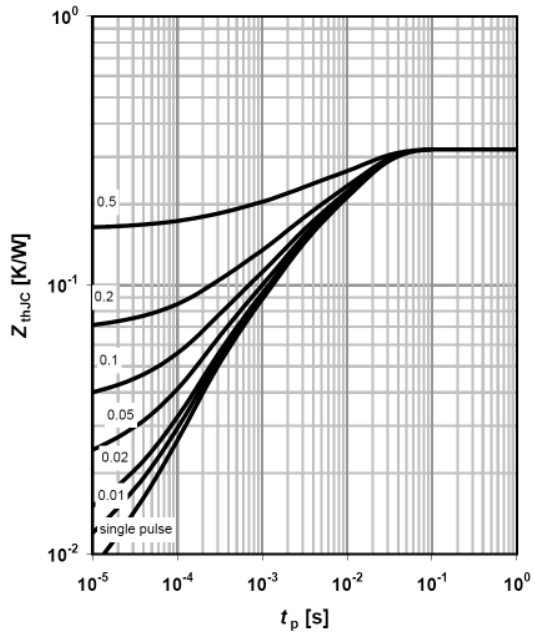
P_{tot} = f(T_C)	$Z_{(thJC)}$=f(tp); parameter: D=t_p/T

Table 9

Safe operating area T_C=25 °C	Safe operating area T_C=80 °C
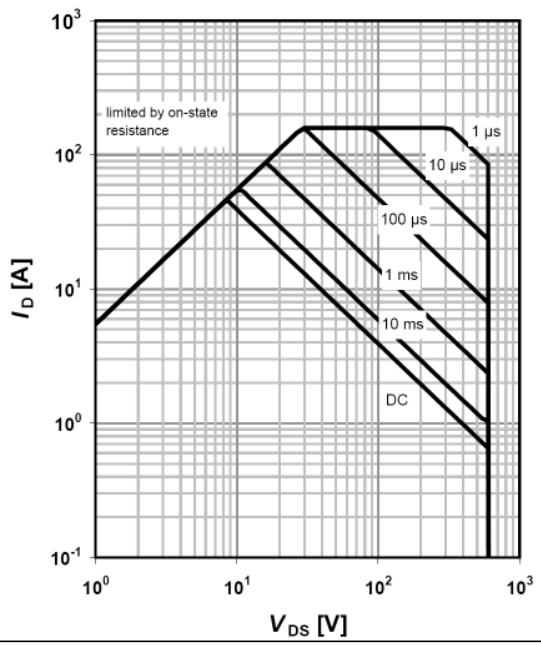	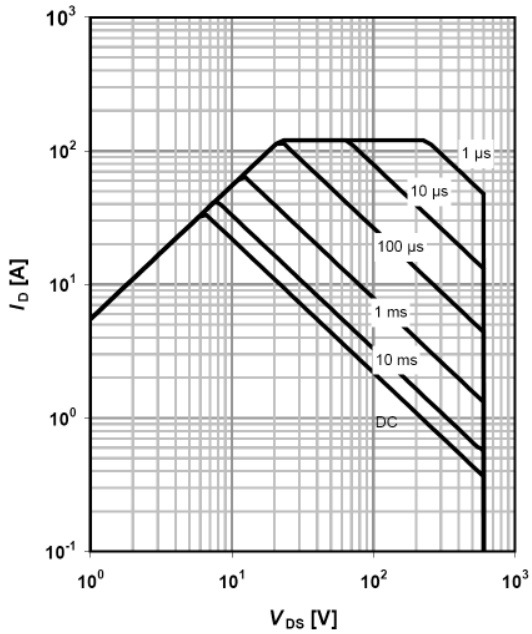
I_D=f(V_{DS}); T_C=25 °C; D=0; parameter t_p	I_D=f(V_{DS}); T_C=80°C; D=0; parameter t_p

Table 10

Typ. output characteristics T_j=25 °C	Typ. output characteristics T_j=125 °C
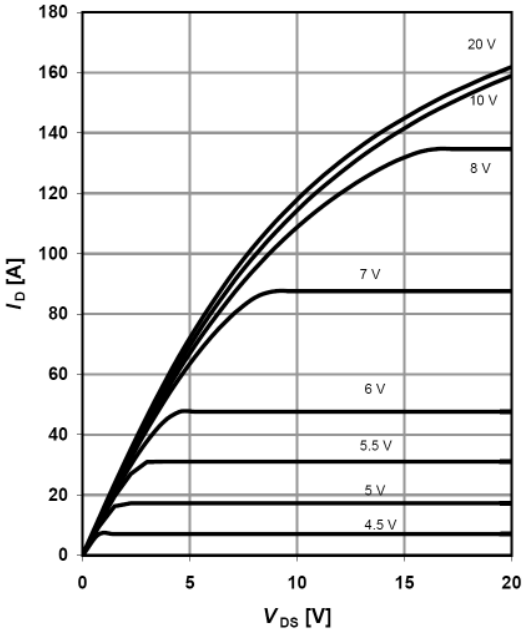	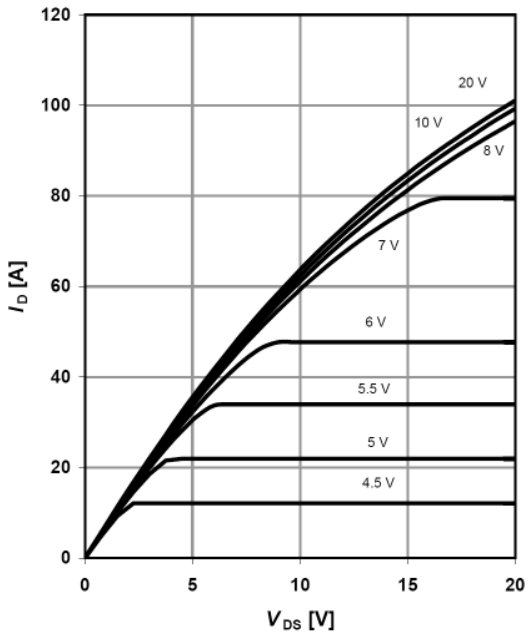
I_D=f(V_{DS}); T_j=25 °C; parameter: V_{GS}	I_D=f(V_{DS}); T_j=125 °C; parameter: V_{GS}

Table 11

Typ. drain-source on-state resistance	Drain-source on-state resistance
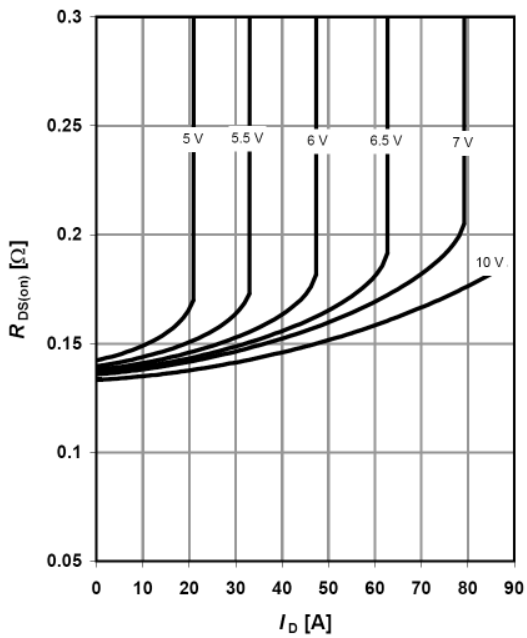	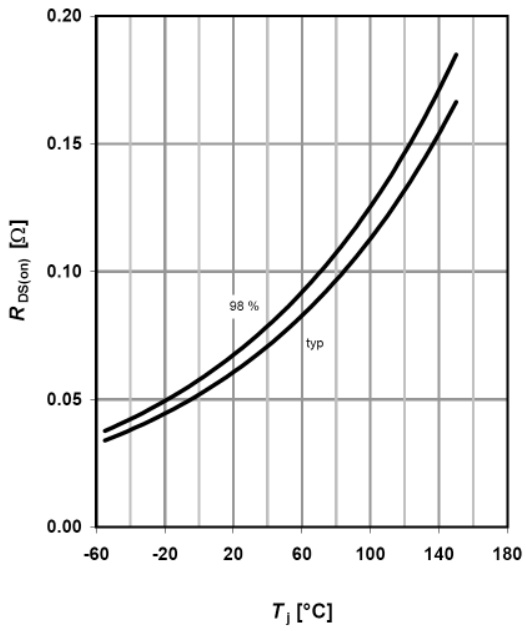
$R_{DS(on)}$=f(I_D); T_j=125 °C; parameter: V_{GS}	$R_{DS(on)}$=f(T_j); I_D=25.8 A; V_{GS}=10 V

Table 12

Typ. transfer characteristics	Typ. gate charge
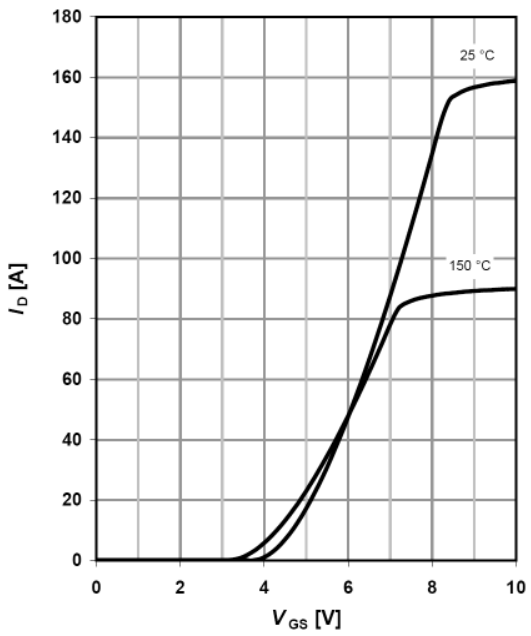	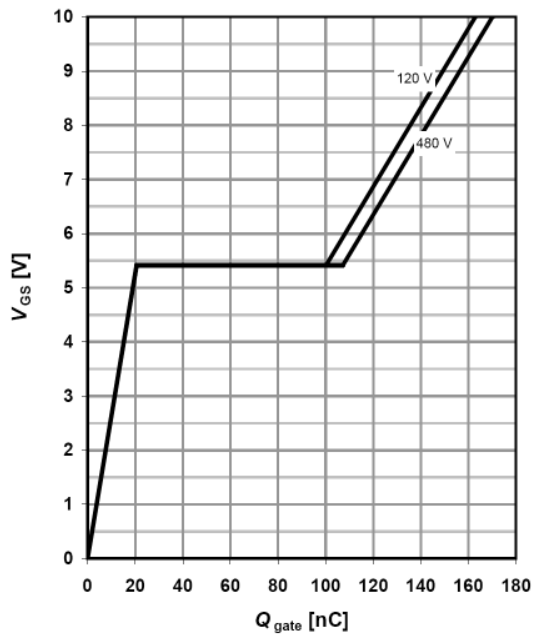
I_D=f(V_{GS}); V_{DS}=20V	V_{GS}=f(Q_{gate}), I_D=25.8 A pulsed

Table 13

Avalanche energy	Drain-source breakdown voltage
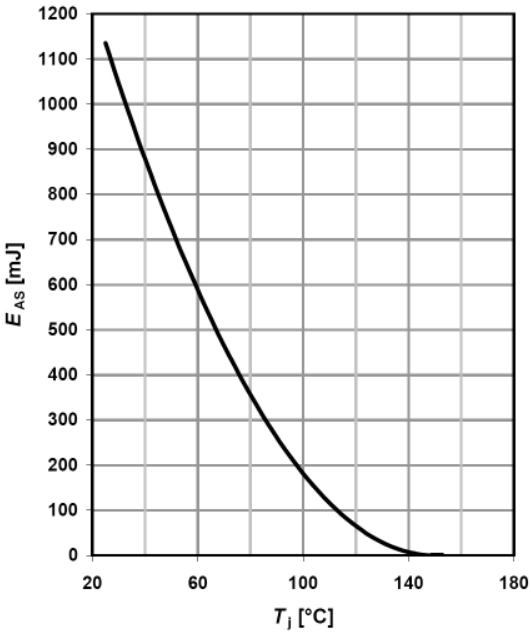	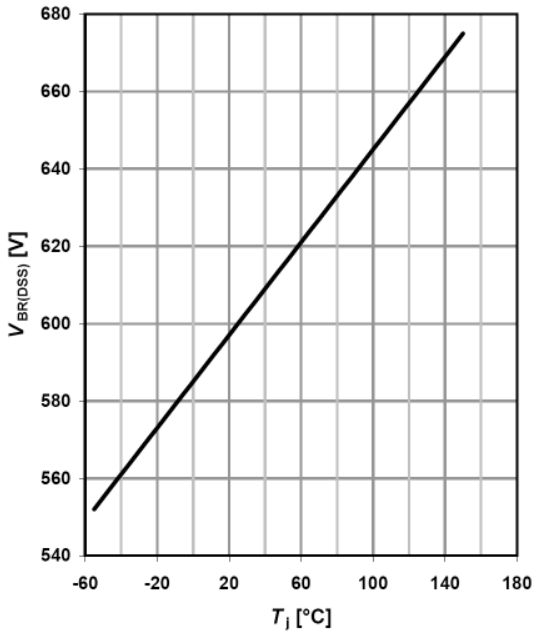
E_{AS}=f(T_j); I_D=9.3 A; V_{DD}=50 V	$V_{BR(DSS)}$=f(T_j); I_D=0.25 mA

Table 14

Typ. capacitances	Typ. C_{oss} stored energy
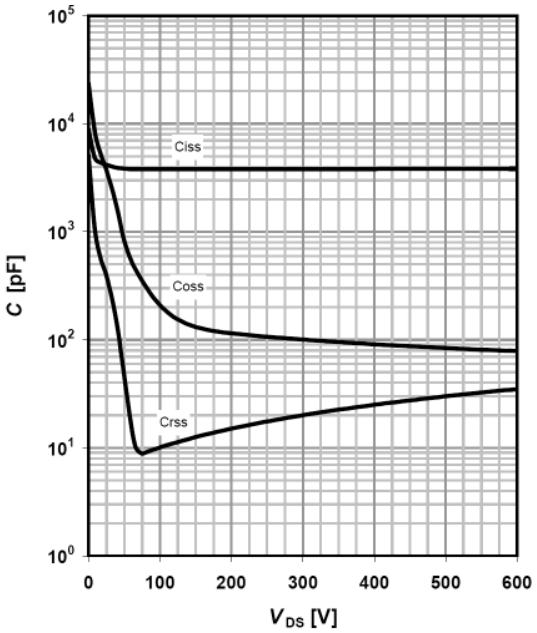	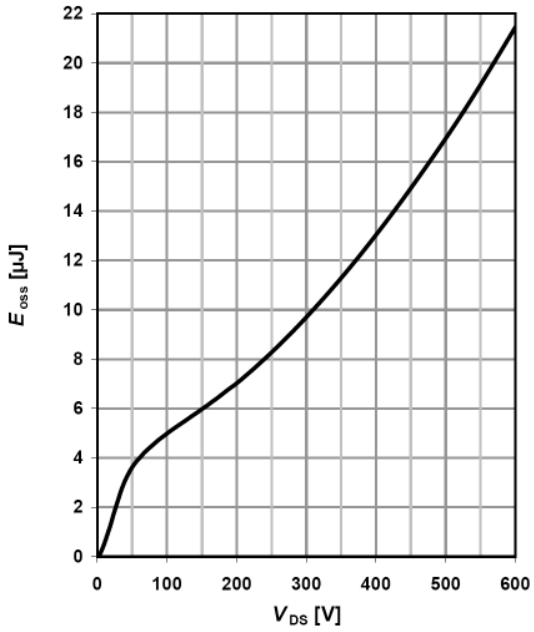
C=f(V_{DS}); V_{GS}=0 V; f=1 MHz	E_{oss}=f(V_{DS})

Table 15

Forward characteristics of reverse diode
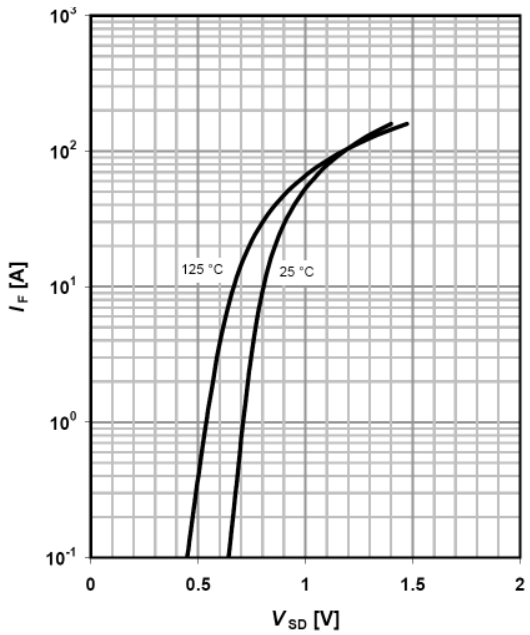
I_F=f(V_{SD}); parameter: T_j

6 Test circuits

Table 16 Switching times test circuit and waveform for inductive load

Switching times test circuit for inductive load	Switching time waveform
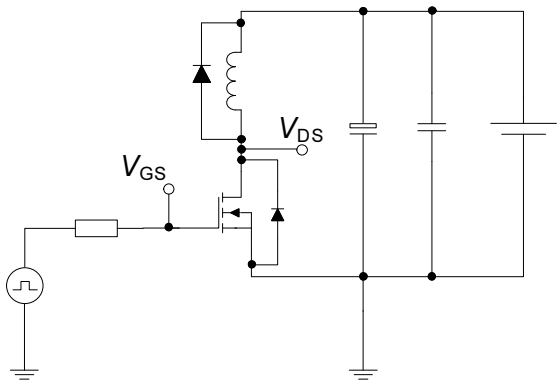	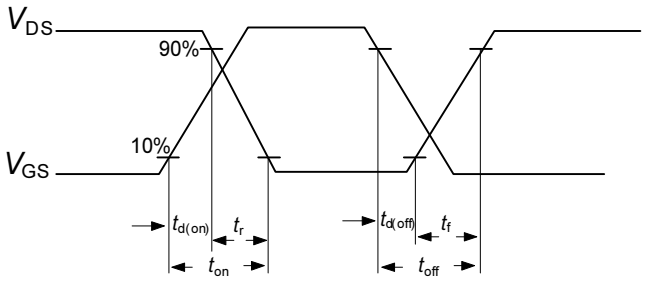

Table 17 Unclamped inductive load test circuit and waveform

Unclamped inductive load test circuit	Unclamped inductive waveform
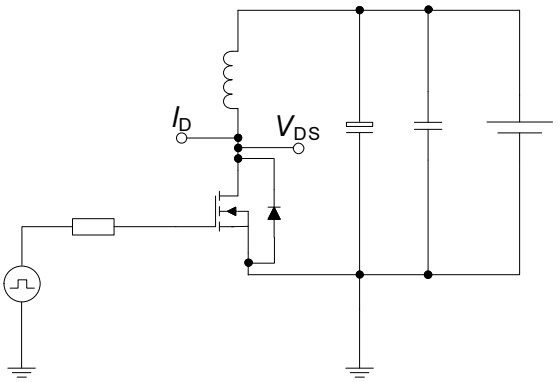	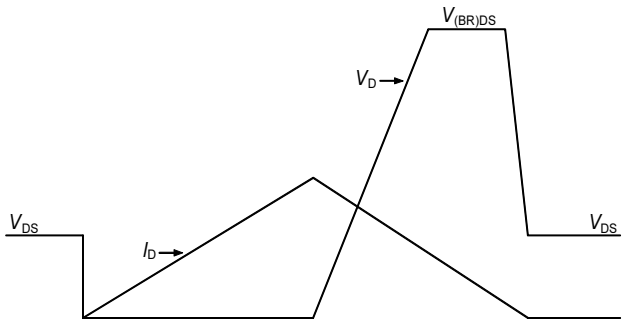

Table 18 Test circuit and waveform for diode recovery times

Test circuit for diode recovery times	Diode recovery waveform
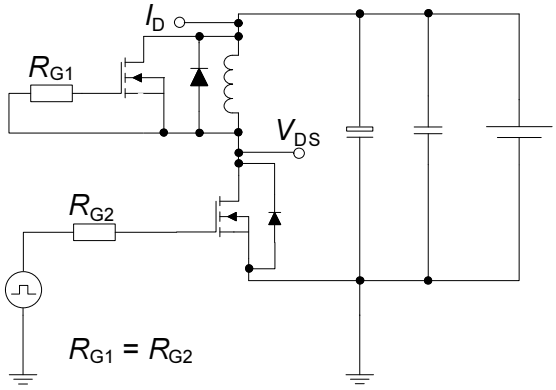	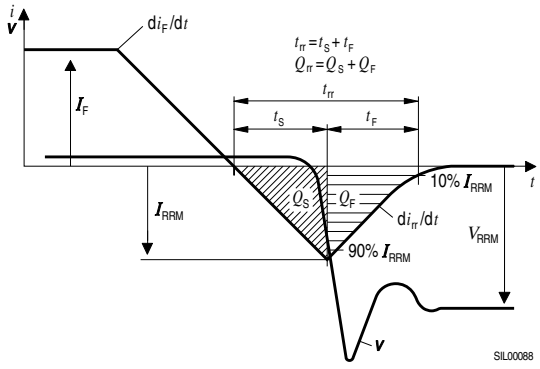

7 Package outlines

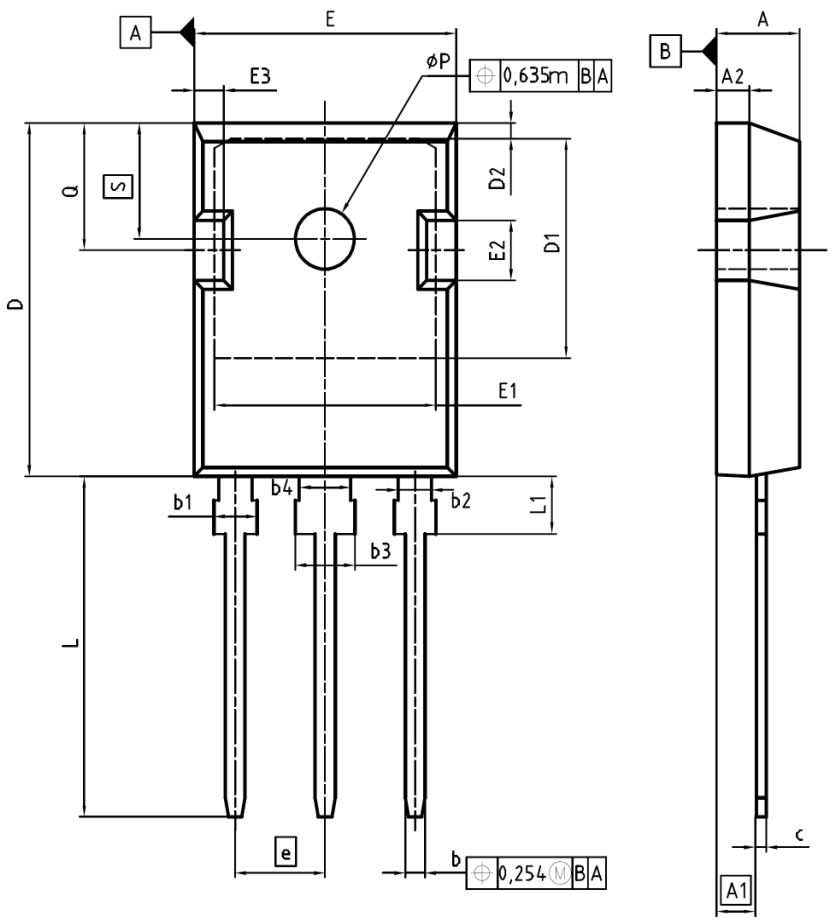

DIM	MILLIMETERS		INCHES	
	MIN	MAX	MIN	MAX
A	4.83	5.21	0.190	0.205
A1	2.27	2.54	0.089	0.100
A2	1.85	2.16	0.073	0.085
b	1.07	1.33	0.042	0.052
b1	1.90	2.41	0.075	0.095
b2	1.90	2.16	0.075	0.085
b3	2.87	3.38	0.113	0.133
b4	2.87	3.13	0.113	0.123
c	0.55	0.68	0.022	0.027
D	20.80	21.10	0.819	0.831
D1	16.25	17.65	0.640	0.695
D2	0.95	1.35	0.037	0.053
E	15.70	16.13	0.618	0.635
E1	13.10	14.15	0.516	0.557
E2	3.68	5.10	0.145	0.201
E3	1.00	2.60	0.039	0.102
e	5.44		0.214	
N	3		3	
L	19.80	20.32	0.780	0.800
L1	4.10	4.47	0.161	0.176
øP	3.50	3.70	0.138	0.146
Q	5.49	6.00	0.216	0.236
S	6.04	6.30	0.238	0.248

DOCUMENT NO.
Z8B00003327

SCALE 0 5 7.5mm

EUROPEAN PROJECTION

ISSUE DATE
01-10-2009

REVISION
04

Figure 1 Outlines TO-247, dimensions in mm/inches

8 Revision History

CoolMOS C6 600V CoolMOS™ C6 Power Transistor

Revision History: 2010-02-09, Rev. 2.1	
Previous Revision:	
Revision	**Subjects (major changes since last revision)**
2.0	Release of final data sheet
2.1	New package outlines TO-247

We Listen to Your Comments

Any information within this document that you feel is wrong, unclear or missing at all?
Your feedback will help us to continuously improve the quality of this document.
Please send your proposal (including a reference to this document) to: **erratum@infineon.com**

Edition 2010-02-09

Published by
Infineon Technologies AG
81726 Munich, Germany

© 2010 Infineon Technologies AG
All Rights Reserved.

Legal Disclaimer

The information given in this document shall in no event be regarded as a guarantee of conditions or characteristics. With respect to any examples or hints given herein, any typical values stated herein and/or any information regarding the application of the device, Infineon Technologies hereby disclaims any and all warranties and liabilities of any kind, including without limitation, warranties of non-infringement of intellectual property rights of any third party.

Information

For further information on technology, delivery terms and conditions and prices, please contact the nearest Infineon Technologies Office (**www.infineon.com**).

Warnings

Due to technical requirements, components may contain dangerous substances. For information on the types in question, please contact the nearest Infineon Technologies Office.

Infineon Technologies component described in this Data Sheet may be used in life-support devices or systems and/or automotive, aviation and aerospace applications or systems only with the express written approval of Infineon Technologies, if a failure of such components can reasonably be expected to cause the failure of that life-support, automotive, aviation and aerospace device or system or to affect the safety or effectiveness of that device or system. Life support devices or systems are intended to be implanted in the human body or to support and/or maintain and sustain and/or protect human life. If they fail, it is reasonable to assume that the health of the user or other persons may be endangered.