Features

- 3939 IR VCSEL
- ROHS and REACH Compliant
- ESD(HBM) 8 KV
- MSL 4 Qualified (J-STD 020)

Applications

- Industrial facility applications
- Consumer Mobile
- Automotive Interior & Exterior
- 3D Sensing(TOF, Structure Light)
- Bio recognition

Description

The INV-Q39CTSIR is a high-power IR VCSEL. It is a SMD type package which can be used in various applications.

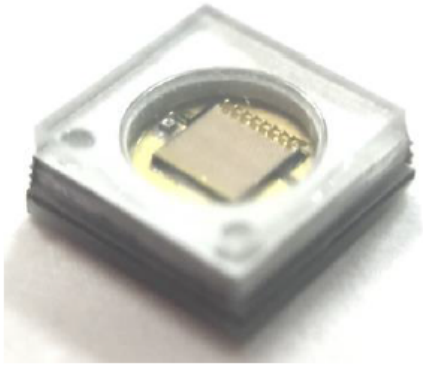

Recommended Solder Pattern

(Suggest Stencil t=0.12 mm)

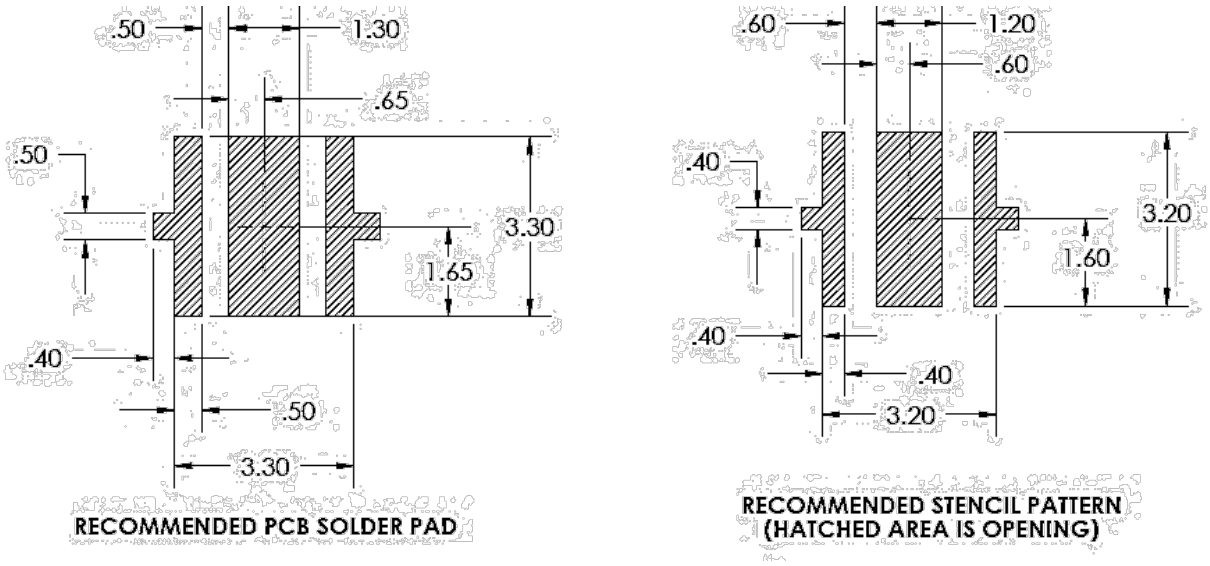

Figure 1. INV-Q39CTSIR Recommended Solder Pattern

Note:

* All dimensions are in millimeters.

* Tolerance is ±0.13mm unless other specified.

Package Dimensions in mm

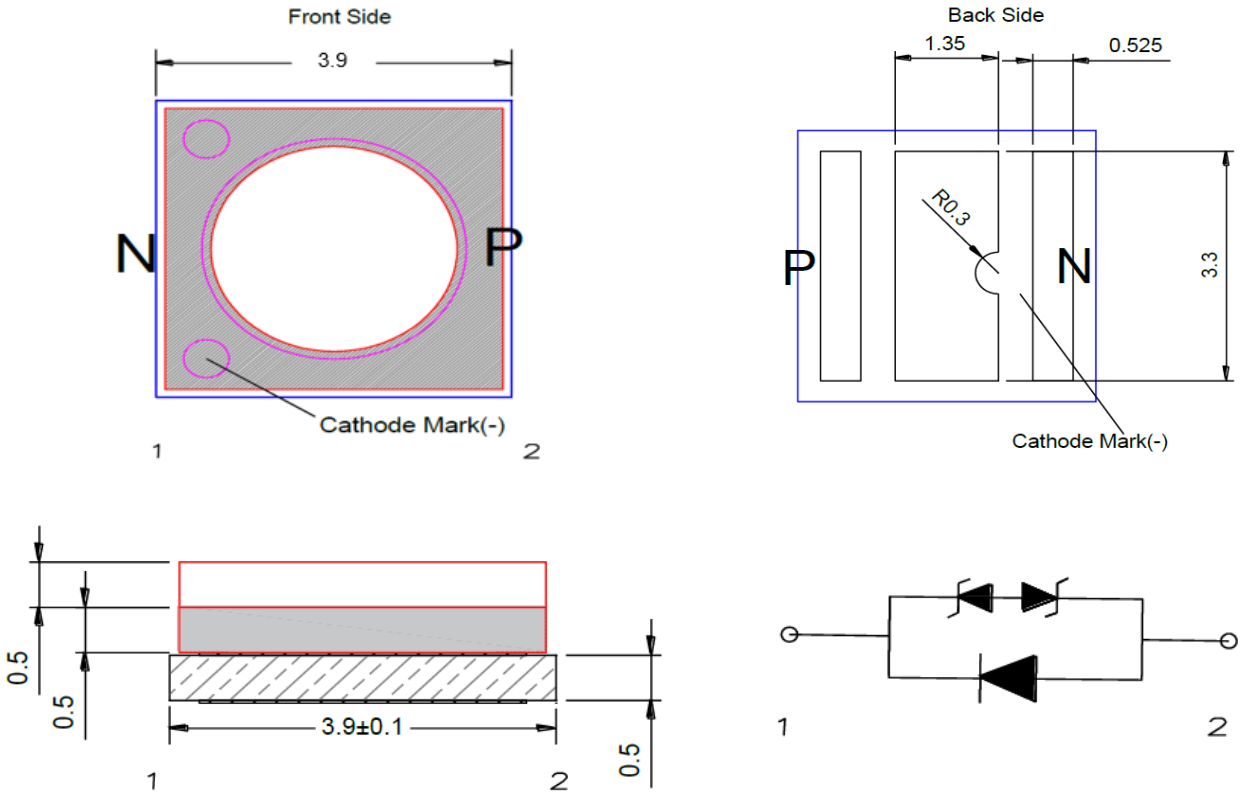

Figure 2. INV-Q39CTSIR Package Dimensions

***Note**

All dimensions are in millimeters. Tolerance is ±0.13mm unless other specified.

Absolute Maximum Rating at 25°C (Note 1)

Product	I_{FP} (mA) max Pulse Current (@1/10 duty)	Pd(W) max	V_R (V) Typ.	T_j (°C) Typ.	T_{ST} (°C)	Rth (°C/W)	Soldering Temp. T_{sol} (°C)	ESD HBM (V)
INV-Q39CTSIR	4000	5.6	-5	110 °C	-40°C~+80°C	8	260 °C	4000

Notes

1. For other ambient, limited setting of current will depend on de-rating curves.
2. D=0.01s duty 1/10.
3. When drive on maximum current , Tj must be kept below 110℃
4. Viewing angle(2 θ 1/2) ± 10°

Electrical Characteristics T_A = 25℃ (Note 1)

Product	V_F(V)@2000mA		Radiometric Power (mW) @2000mA		Peak Wavelength (nm)		I_R (μ A)	View Angle
	min	max	min	max	min	max	Max	2 θ 1/2
INV-Q39CTSIR	1.8	2.8	1300	2000	840	860	10	30

***Notes**

1. Performance guaranteed only under conditions listed in above tables.
2. Viewing angle(2θ1/2) ± 10°

ESD Precaution

ATTENTION: Electrostatic Discharge (ESD) protection

The symbol above denotes that ESD precaution is needed. ESD protection for GaP and AlGaAs based chips is necessary even though they are relatively safe in the presence of low static-electric discharge. Parts built with AlInGaP, GaN, or/and InGaN based chips are STATIC SENSITIVE devices. ESD precaution must be taken during design and assembly.
If manual work or processing is needed, please ensure the device is adequately protected from ESD during the process.

Please be advised that normal static precautions should be taken in the handling and assembly of this device to prevent damage or degradation which may be induced by electrostatic discharge (ESD).

Binning Definition (Binning@2000mA)

Power Bin

Bin Code	Min.	Max.	Unit
P1	1300	2000	mW

Wavelength Bin

Bin Code	Min.	Max.	Unit
W1	840	860	nm

Voltage Bin

Bin Code	Min.	Max.	Unit
V1	1.8	2.2	V
V2	2.2	2.6	
V3	2.6	2.8	

***Notes:**

1. Radiometric Power (Po) ±10%.
2. Wavelength (Wp) ±2.0nm
3. Forward voltage (V_F) ±0.12V

Electronic-Optical Characteristics

Spectrum Distribution

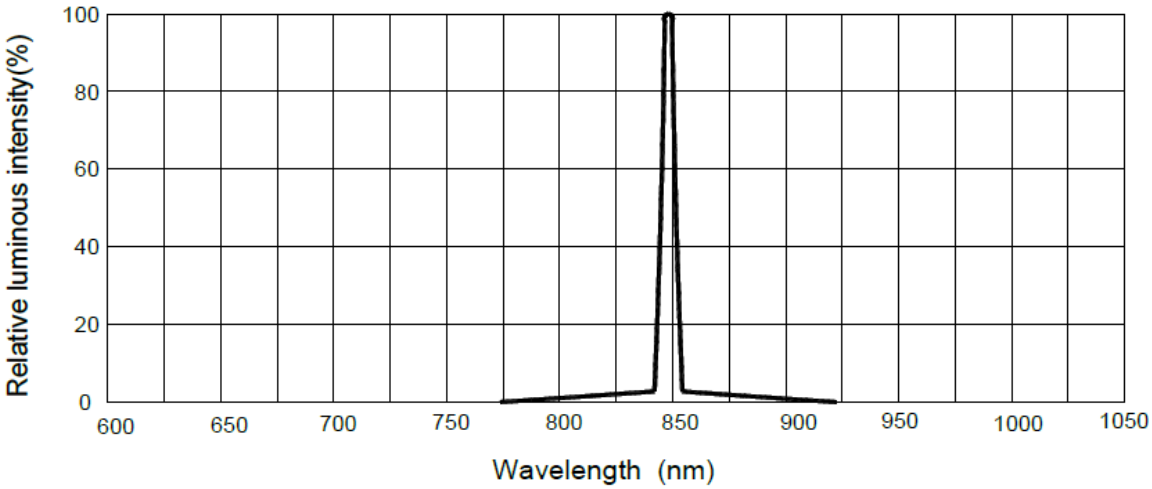

Beam angle (2θ1/2) 30D

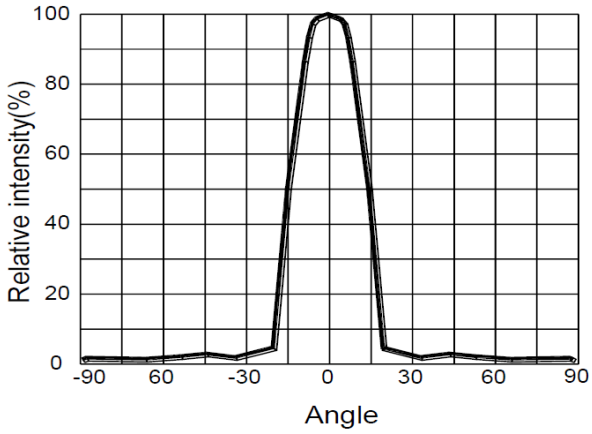

Thermal Design for De-rating

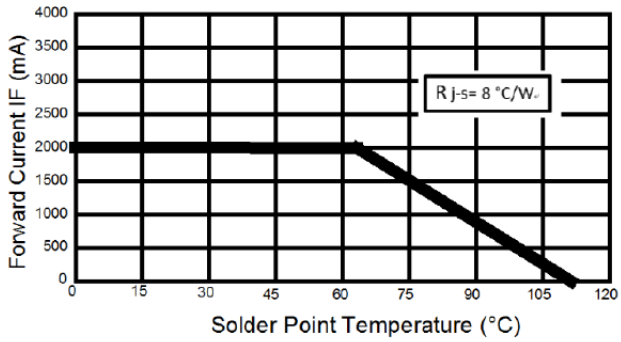

***Notes:**

Viewing angle (2θ1/2) ± 10°

Ordering Information

Orderable Part Number	Peak Wavelength (nm)	Radiometric Power (mW) @2000mA		Forward Voltage (V) @2000mA		Viewing Angle
		Min	Max	Min	Max	
INV-Q39CTSIR	840-860	1300	2000	1.8	2.8	30°

Label Specifications

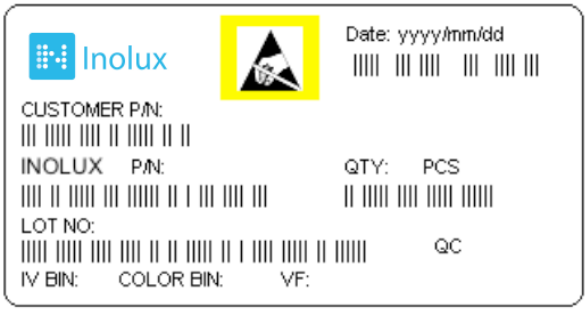

Inolux P/N:

INV	-	Q	3	9	C	T	S		IR	-	X	X	X	X
Inolux VCSEL		Material	Package		Variation	Orientation	Current	Lens	Color		Customized Stamp-off			
		Q = Quartz Type	39C = 3.9 x 3.9, 120 Deg.			T = Top Mount	S = 2000mA	(Blank) = Clear	IR = 850nm					

Lot No.:

Z	2	0	1	7	01	24	001
Internal Tracker	Year (2017, 2018, ...)				Month	Date	Serial

Reflow Soldering

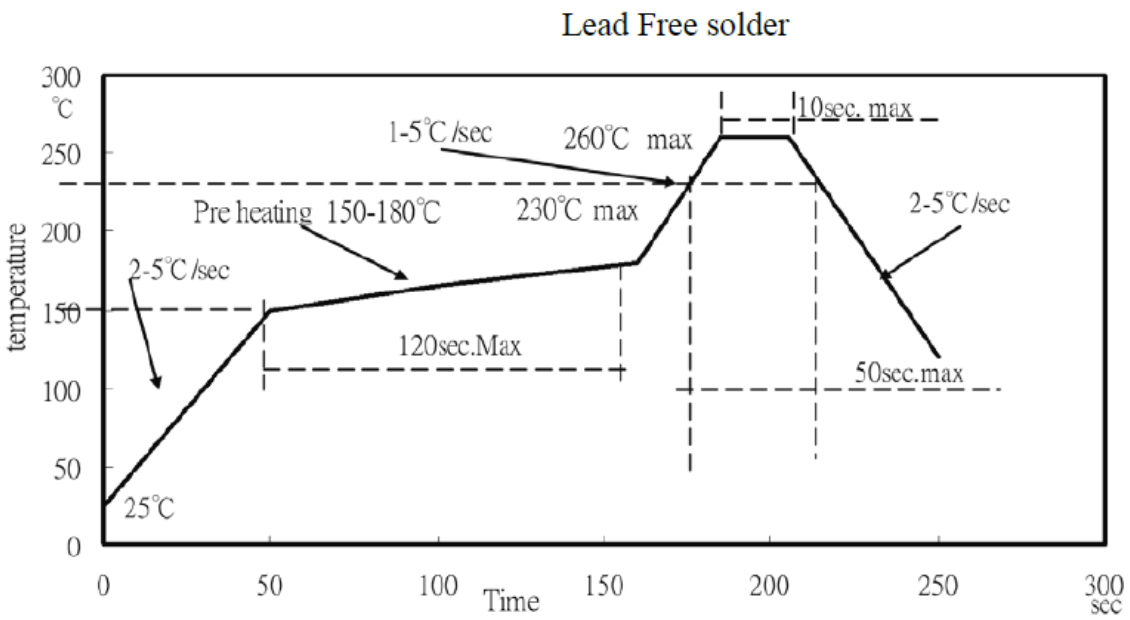

Soldering Iron

Basic Spec is ≦ 4 sec. when 260°C (+10°C ➔ -1 second). Power dissipation of Iron should be less than 15W. Surface temperature should be under 230°C

Rework

Rework should be completed within 4 second under 245°C

Notes

1. Do not stress the silicone resin while it is exposed to high temperature.
2. The number of reflow process should not exceed 3 times.

Packing

The carrier tape conforms to EIA-481D.

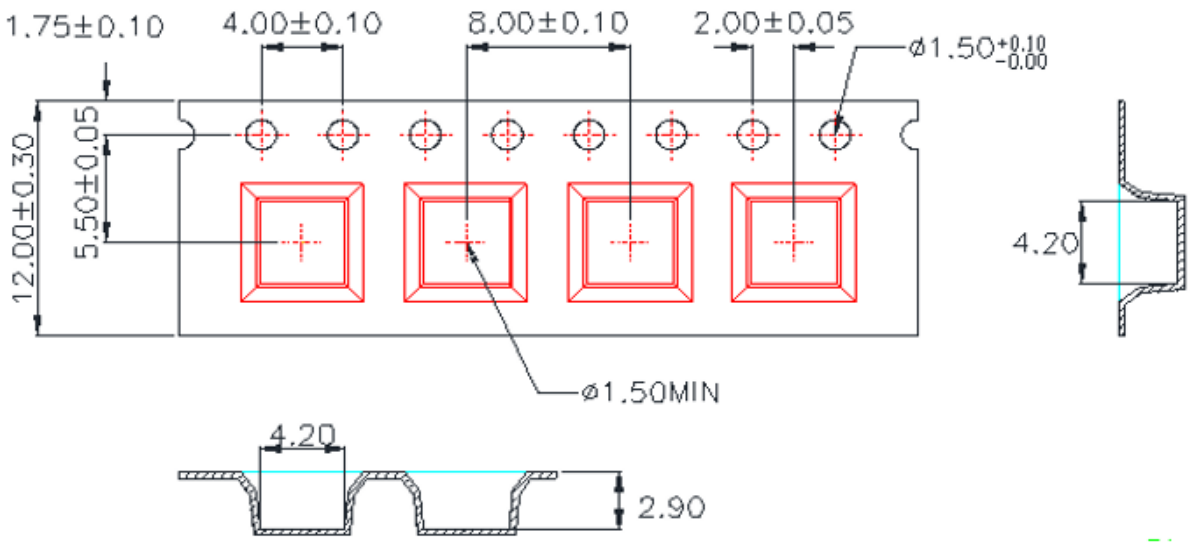

W	A0	B0	K0
12.00±0.30	4.20±0.10	4.20±0.10	2.90±0.10

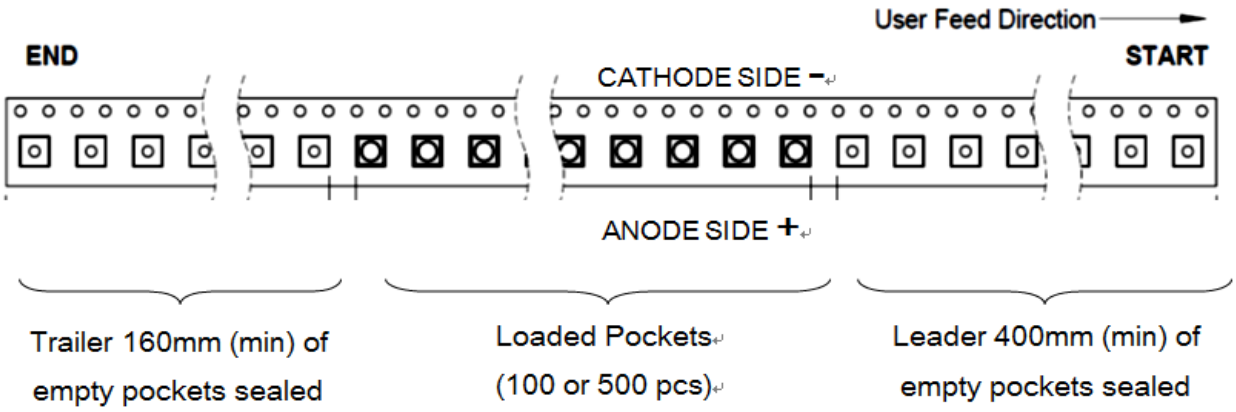

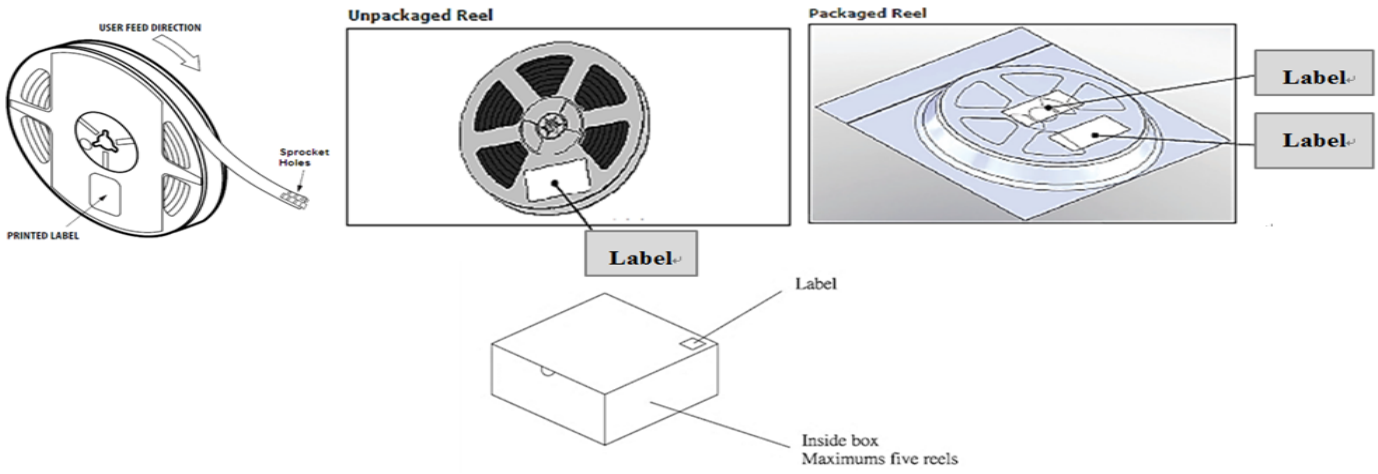

Notes:

1. Each Reel (minimum number of pieces is 100 and maximum is 500(30D/60D/120D) packed in a moisture-proof bag along with 2 packs of desiccant and a humidity indicator card.
2. A maximum of 5 moisture-proof bags are packed in an inner box (size: 240mm x 200mm x 105mm ±5mm).
3. A maximum of 4 inner boxes are put in an outer box (size: 410mm x 255mm x 230mm ±5mm).
4. Part No., Lot No., quantity should be indicated on the label of the moisture-proof bag and the cardboard box.

Revision History

Changes since last revision	Page	Version No.	Revision Date
Initial Release		1.0	02-03-2019
Revise The Drawing and Parameters	2, 4	1.1	05-13-2019

DISCLAIMER

INOLUX reserves the right to make changes without further notice to any products herein to improve reliability, function or design. INOLUX does not assume any liability arising out of the application or use of any product or circuit described herein; neither does it convey any license under its patent rights, nor the rights of others.

LIFE SUPPORT POLICY

INOLUX's products are not authorized for use as critical components in life support devices or systems without the express written approval of the President of INOLUX or INOLUX CORPORATION. As used herein:
1. Life support devices or systems are devices or systems which, (a) are intended for surgical implant into the body, or (b) support or sustain life, and (c) whose failure to perform when properly used in accordance with instructions for use provided in the labeling, can be reasonably expected to result in a significant injury of the user.
2. A critical component in any component of a life support device or system whose failure to perform can be reasonably expected to cause the failure of the life support device or system, or to affect its safety or effectiveness.