MOSFET

Metal Oxide Semiconductor Field Effect Transistor

CFDA Automotive

650V CoolMOS™ CFDA Power Transistor
IPx65R310CFDA

Data Sheet

Rev. 2.0
Final

Automotive

1 Description

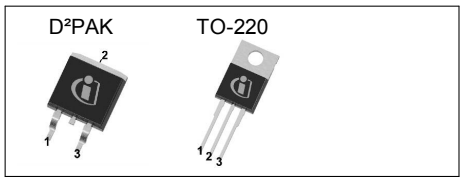

CoolMOS™ is a revolutionary technology for high voltage power MOSFETs, designed according to the superjunction (SJ) principle and pioneered by Infineon Technologies. 650V CoolMOS™ CFDA series combines the experience of the leading SJ MOSFET supplier with high class innovation. The resulting devices provide all benefits of a fast switching SJ MOSFET while offering an extremely fast and robust body diode. This combination of extremely low switching, commutation and conduction losses together with highest robustness make especially resonant switching applications more reliable, more efficient, lighter, and cooler.

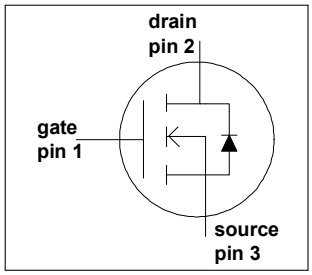

Features

- Ultra-fast body diode
- Very high commutation ruggedness
- Extremely low losses due to very low FOM Rdson*Qg and Eoss
- Easy to use/drive
- Qualified according to AEC Q101
- Green package (RoHS compliant), Pb-free plating, halogen free for mold compound

Applications

650V CoolMOS™ CFDA is designed for switching applications.

Table 1 Key Performance Parameters

Parameter	Value	Unit
V_{DS}	650	V
RDS(on),max	0.31	Ω
Qg,typ	41	nC
ID,pulse	34.4	A
Eoss @ 400V	3.5	µJ
Body diode di/dt	900	A/µs
Qrr	0.35	µC
trr	95	ns
Irrm	6.5	A

Type / Ordering Code	Package	Marking	Related Links
IPB65R310CFDA	PG-TO 263	65F6310A	-
IPP65R310CFDA	PG-TO 220		

Table of Contents

Description 2
Table of Contents 3
Maximum ratings 4
Thermal characteristics 5
Electrical characteristics 6
Electrical characteristics diagrams 8
Test Circuits 12
Package Outlines 13
Revision History 15
Disclaimer 15

2 Maximum ratings

at T_j = 25°C, unless otherwise specified

Table 2 Maximum ratings

Parameter	Symbol	Values			Unit	Note / Test Condition
		Min.	Typ.	Max.		
Continuous drain current[1]	I_D			11.4	A	T_C = 25°C
				7.2		T_C = 100°C
Pulsed drain current[2]	$I_{D,pulse}$			34.4	A	T_C = 25°C
Avalanche energy, single pulse	E_{AS}			290	mJ	I_D = 2.3A, V_{DD} = 50V (see table 19)
Avalanche energy, repetitive	E_{AR}			0.43	mJ	I_D = 2.3A, V_{DD} = 50V
Avalanche current, repetitive	I_{AR}			2.3	A	
MOSFET dv/dt ruggedness	dv/dt			50	V/ns	V_{DS} = 0 ... 400V
Gate source voltage	V_{GS}	-20		20	V	static
		-30		30		AC (f > 1 Hz)
Power dissipation (non FullPAK, SMD) TO-220, D²PAK	P_{tot}			104.2	W	T_C = 25°C
Operating and storage temperature	T_j, T_{stg}	-40		150	°C	
Mounting torque (non FullPAK) TO-220				60	Ncm	M3 and M3.5 screws
Continuous diode forward current	I_S			11.4	A	T_C = 25°C
Diode pulse current	$I_{S,pulse}$			34.4	A	T_C = 25°C
Reverse diode dv/dt[3]	dv/dt			50	V/ns	V_{DS} = 0 ... 400V, $I_{SD} \leq I_D$, T_j = 25°C (see table 17)
Maximum diode commutation speed	di_f/dt			900	A/µs	

[1] Limited by $T_{j\,max}$.
[2] Pulse width t_p limited by $T_{j\,max}$
[3] Identical low side and high side switch with identical R_G

3 Thermal characteristics

Table 3 Thermal characteristics TO-220

Parameter	Symbol	Values			Unit	Note / Test Condition
		Min.	Typ.	Max.		
Thermal resistance, junction - case	R_{thJC}			1.2	K/W	
Thermal resistance, junction - ambient	R_{thJA}			62	K/W	leaded
Soldering temperature, wavesoldering only allowed at leads	T_{sold}			260	°C	1.6 mm (0.063 in.) from case for 10s

Table 4 Thermal characteristics D²PAK

Parameter	Symbol	Values			Unit	Note / Test Condition
		Min.	Typ.	Max.		
Thermal resistance, junction - case	R_{thJC}			1.2	K/W	
Thermal resistance, junction - ambient[1)]	R_{thJA}			62	K/W	SMD version, device on PCB, minimal footprint
			35			SMD version, device on PCB, 6cm² cooling area
Soldering temperature, wave- & reflowsoldering allowed	T_{sold}			260	°C	reflow MSL

[1)] Device on 40mm*40mm*1.5mm one layer epoxy PCB FR4 with 6cm² copper area (thickness 70µm) for drain connection. PCB is vertical without air stream cooling.

4 Electrical characteristics

at T_j = 25°C, unless otherwise specified

Table 5 Static characteristics

Parameter	Symbol	Values			Unit	Note / Test Condition
		Min.	Typ.	Max.		
Drain-source breakdown voltage[1]	$V_{(BR)DSS}$	650			V	V_{GS} = 0V, I_D = 1mA
Gate threshold voltage	$V_{GS(th)}$	3.5	4	4.5	V	V_{DS} = V_{GS}, I_D = 0.44mA
Zero gate voltage drain current	I_{DSS}			1	µA	V_{DS} = 650V, V_{GS} = 0V, T_j = 25°C
			150			V_{DS} = 650V, V_{GS} = 0V, T_j = 150°C
Gate-source leakage current	I_{GSS}			100	nA	V_{GS} = 20V, V_{DS} = 0V
Drain-source on-state resistance	$R_{DS(on)}$		0.28	0.31	Ω	V_{GS} = 10V, I_D = 4.4A, T_j = 25°C
			0.725			V_{GS} = 10V, I_D = 4.4A, T_j = 150°C
Gate resistance	R_G		4.5		Ω	f = 1MHz, open drain

Table 6 Dynamic characteristics

Parameter	Symbol	Values			Unit	Note / Test Condition
		Min.	Typ.	Max.		
Input capacitance	C_{iss}		1110		pF	V_{GS} = 0V, V_{DS} = 100V, f = 1MHz
Output capacitance	C_{oss}		55		pF	
Effective output capacitance, energy related[2]	$C_{o(er)}$		44		pF	V_{GS} = 0V, V_{DS} = 0 ... 400V
Effective output capacitance, time related[3]	$C_{o(tr)}$		204		pF	I_D = constant, V_{GS} = 0V, V_{DS} = 0 ... 400V
Turn-on delay time	$t_{d(on)}$		11		ns	V_{DD} = 400V, V_{GS} = 13V, I_D = 6.6A, R_G = 3.4Ω (see table 18)
Rise time	t_r		7.5		ns	
Turn-off delay time	$t_{d(off)}$		45		ns	
Fall time	t_f		7		ns	

Table 7 Gate charge characteristics

Parameter	Symbol	Values			Unit	Note / Test Condition
		Min.	Typ.	Max.		
Gate to source charge	Q_{gs}		7		nC	V_{DD} = 480V, I_D = 6.6A, V_{GS} = 0 to 10V
Gate to drain charge	Q_{gd}		22		nC	
Gate charge total	Q_g		41		nC	
Gate plateau voltage	$V_{plateau}$		6.4		V	

[1] For applications with applied blocking voltage > 65% of the specified blocking voltage, we recommend to evaluate the impact of the cosmic radiation effect in early design phase. For assessment please contact local Infineon sales office.

[2] $C_{o(er)}$ is a fixed capacitance that gives the same stored energy as C_{oss} while V_{DS} is rising from 0 to 400V

[3] $C_{o(tr)}$ is a fixed capacitance that gives the same charging time as C_{oss} while V_{DS} is rising from 0 to 400V

Table 8 Reverse diode characteristics

Parameter	Symbol	Values			Unit	Note / Test Condition
		Min.	Typ.	Max.		
Diode forward voltage	V_{SD}		0.9		V	V_{GS} = 0V, I_F = 6.6A, T_j = 25°C
Reverse recovery time	t_{rr}		95		ns	V_R = 400V, I_F = 6.6A, di_F/dt = 100A/µs (see table 17)
Reverse recovery charge	Q_{rr}		0.35		µC	
Peak reverse recovery current	I_{rrm}		6.5		A	

5 Electrical characteristics diagrams

Table 9

Power dissipation	Max. transient thermal impedance
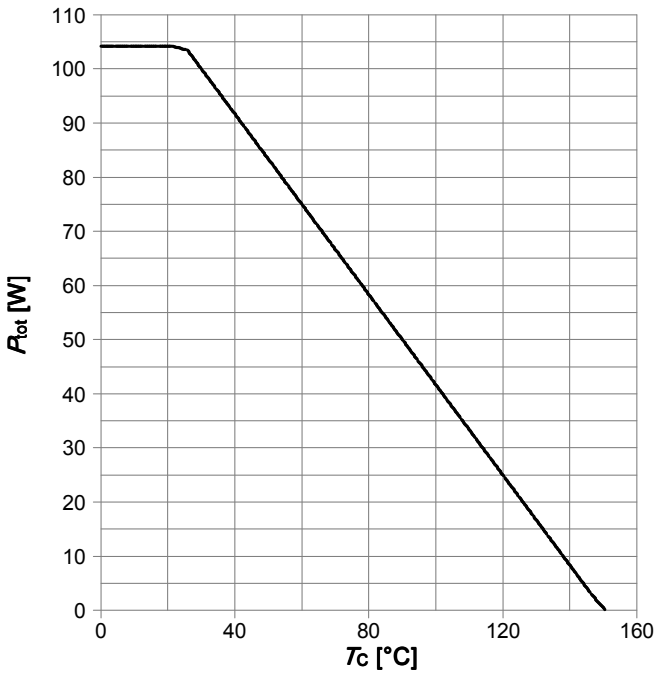	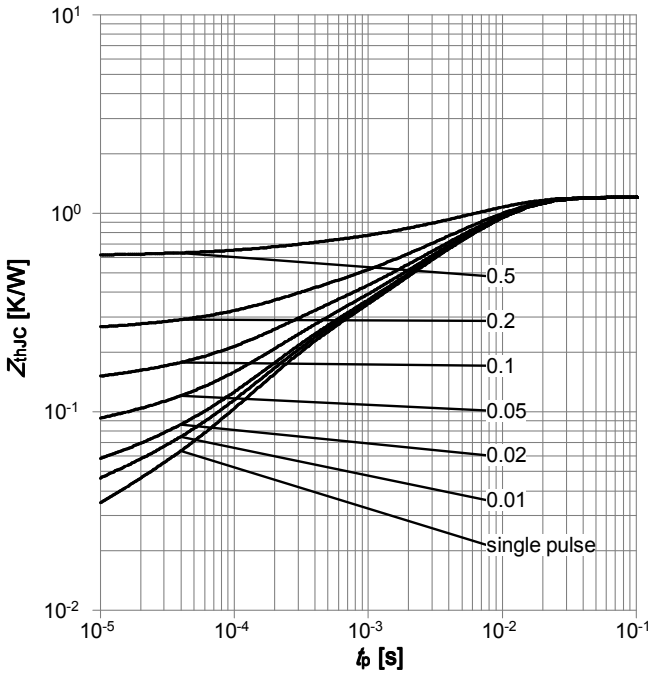
P_{tot}=f(T_C)	Z_{thJC} =f(t_P); parameter: $D=t_p/T$

Table 10

Typ. output characteristics	Typ. output characteristics
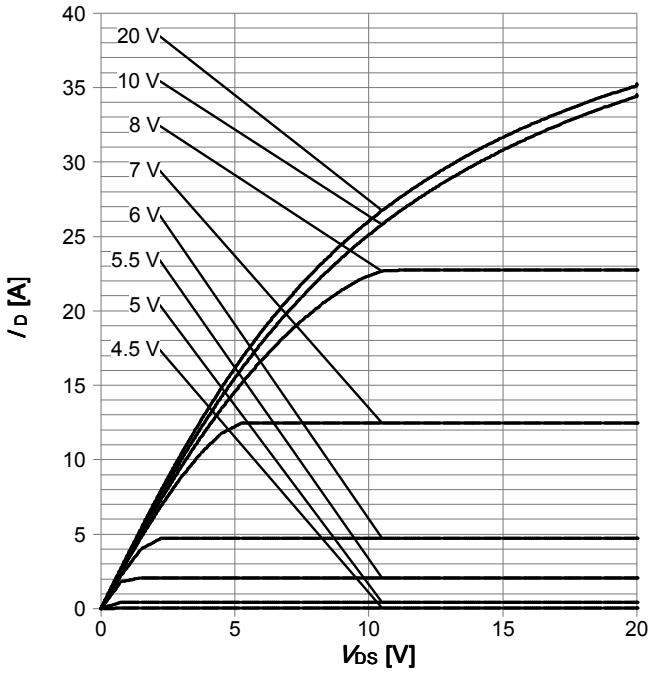	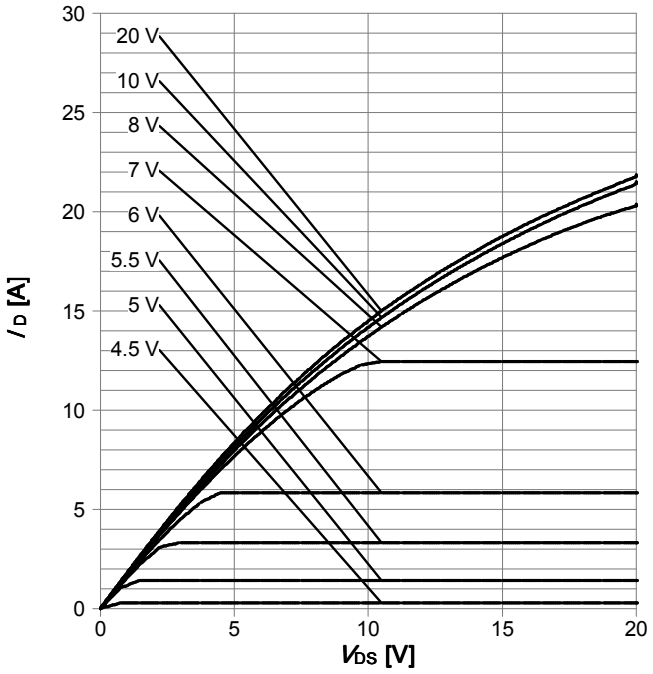
I_D=f(V_{DS}); T_j=25 °C; parameter: V_{GS}	I_D=f(V_{DS}); T_j=125 °C; parameter: V_{GS}

Table 11

Typ. drain-source on-state resistance	Typ. drain-source on-state resistance
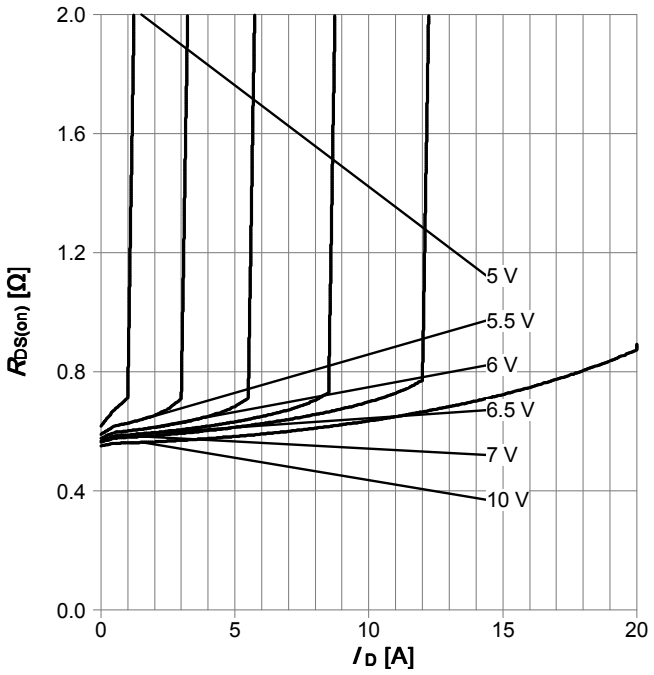	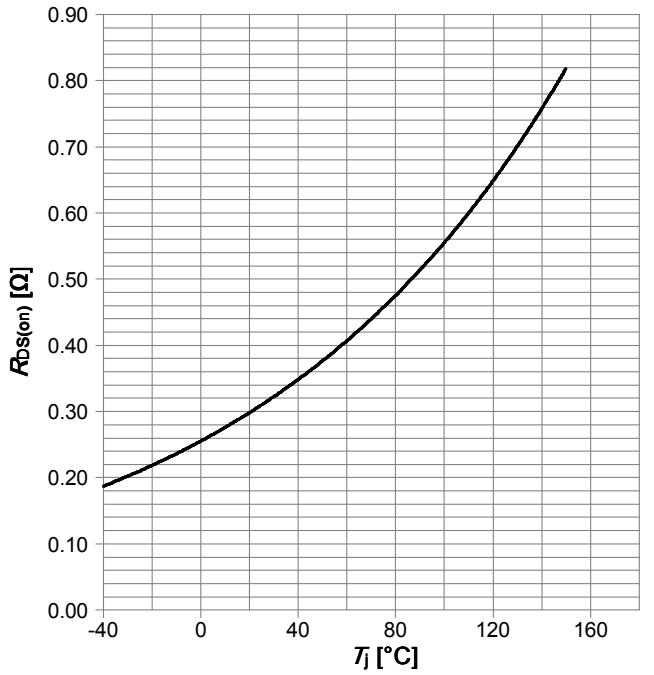
$R_{DS(on)}$=f(I_D); T_j=125 °C; parameter: V_{GS}	$R_{DS(on)}$=f(T_j); I_D=18.1 A; V_{GS}=10 V

Table 12

Typ. transfer characteristics	Safe operating area
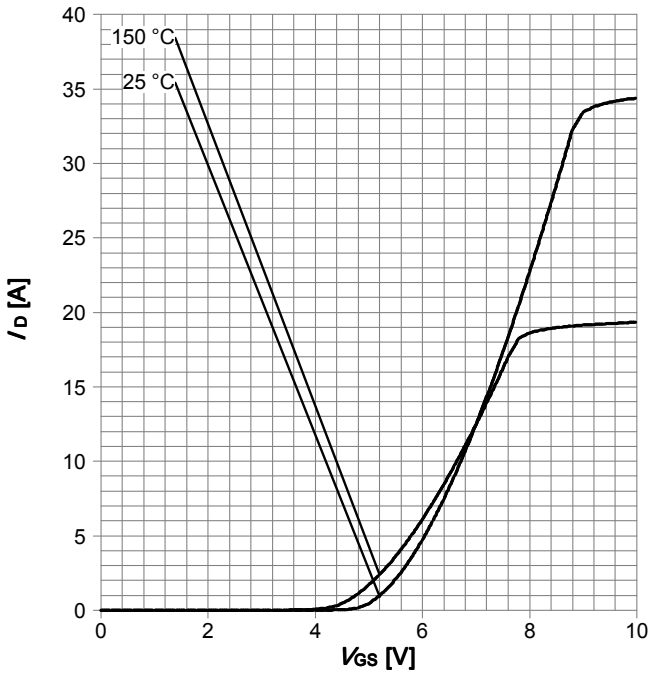	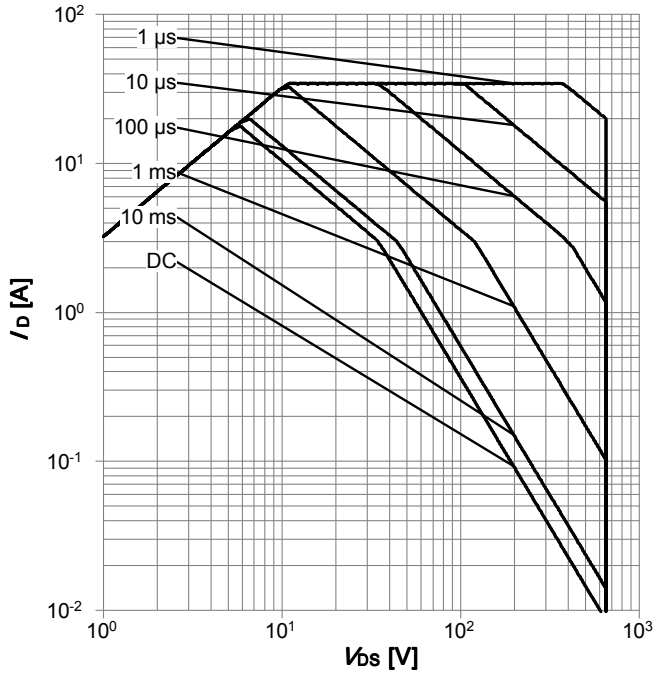
I_D=f(V_{GS}); |V_{DS}|>2|I_D|$R_{DS(on)max}$; parameter: T_j	I_D=f(V_{DS}); T_C=25 °C; D=0; parameter: t_p

Table 13

Safe operating area	Typ. gate charge
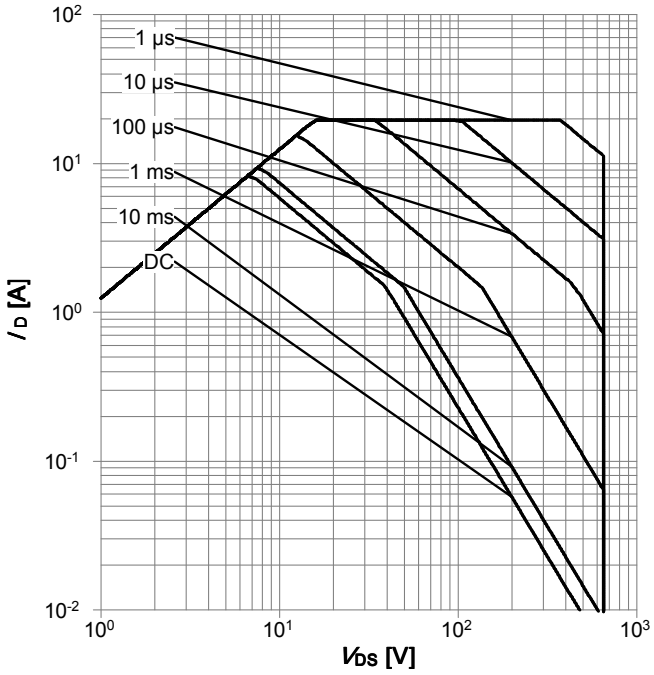	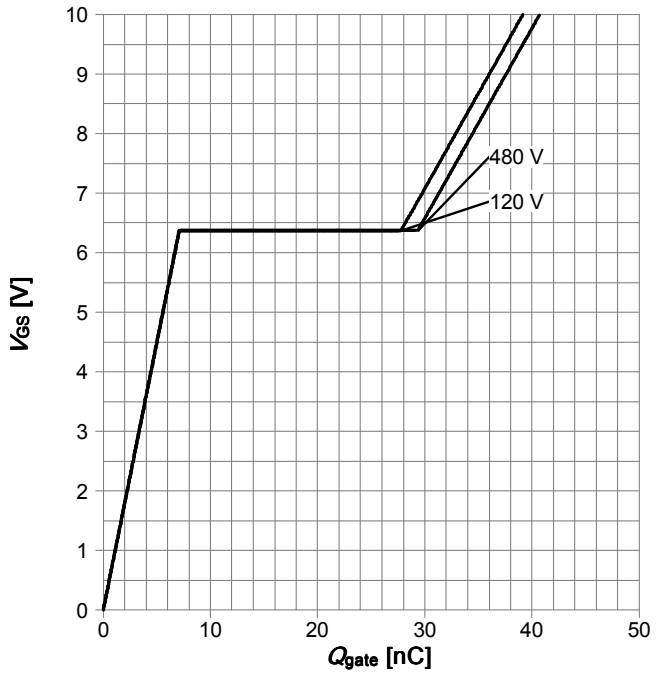
I_D=f(V_{DS}); T_C=80 °C; D=0; parameter: t_p	V_{GS}=f(Q_{gate}); I_D=6.5 A pulsed; parameter: V_{DD}

Table 14

Typ. forward characteristics of reverse diode	Avalanche energy
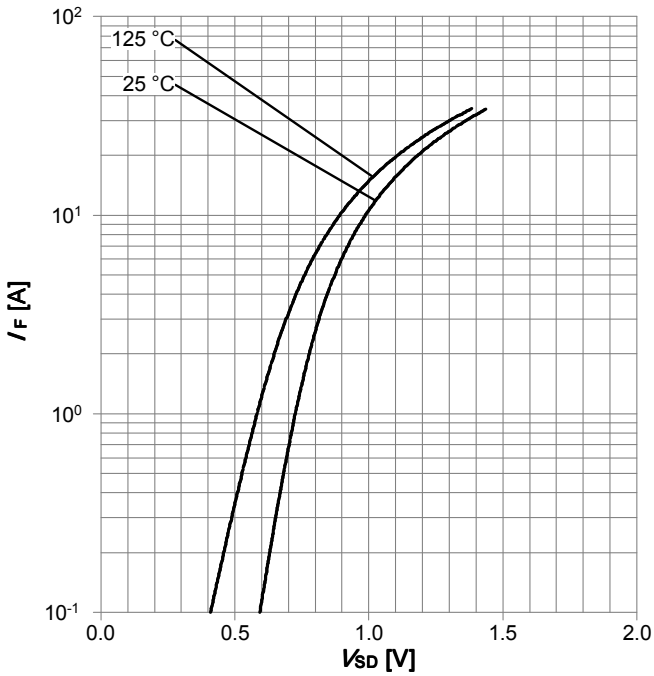	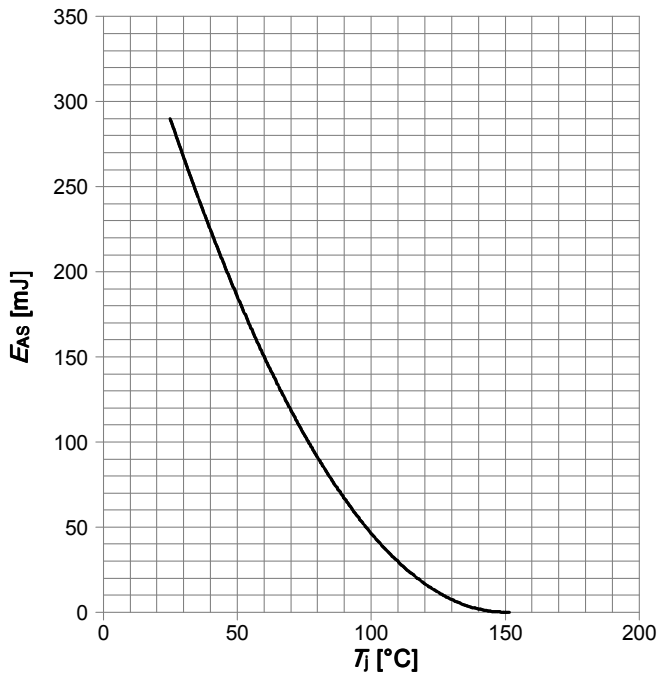
I_F=f(V_{SD}); parameter: T_j	E_{AS}=f(T_j); I_D=6.6 A; V_{DD}=50 V

Table 15

Drain-source breakdown voltage	Typ. capacitances
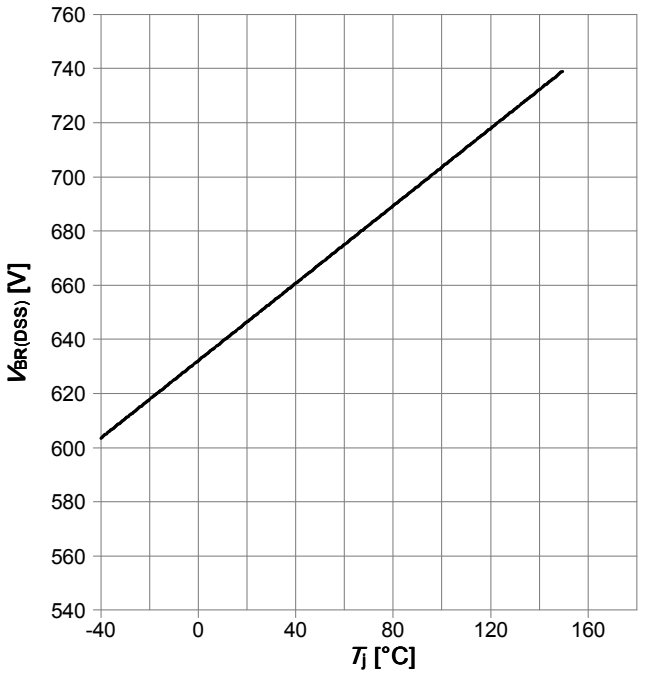	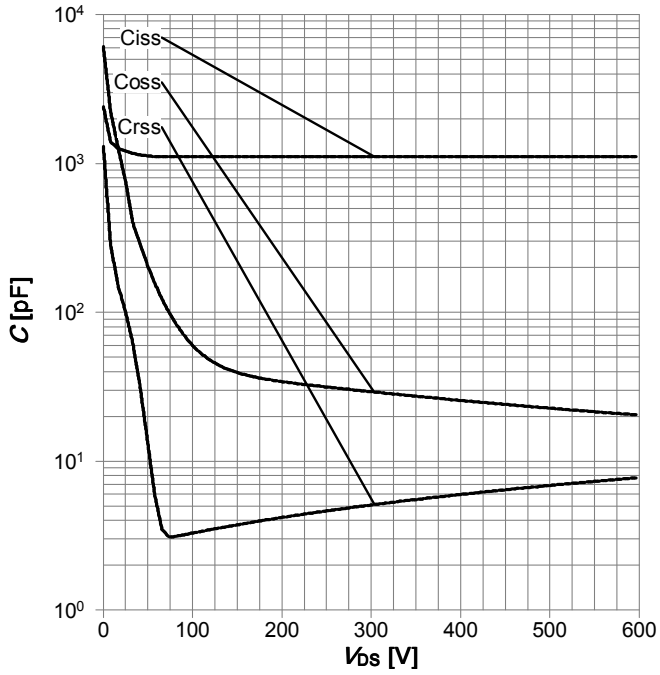
$V_{BR(DSS)}$=f(T_j); I_D=0.25 mA	C=f(V_{DS}); V_{GS}=0 V; f=1 MHz

Table 16

Typ. Coss stored energy
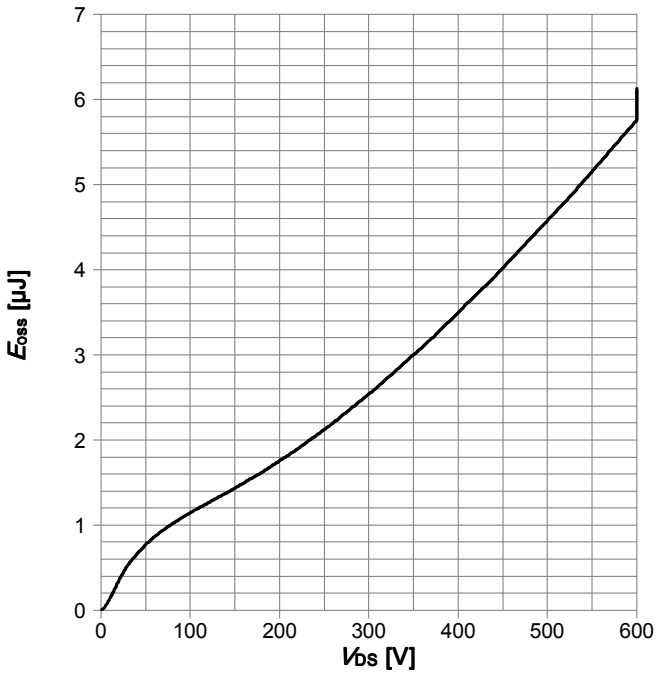
E_{oss}=f(V_{DS})

6 Test Circuits

Table 17 Diode characteristics

Test circuit for diode characteristics	Diode recovery waveform
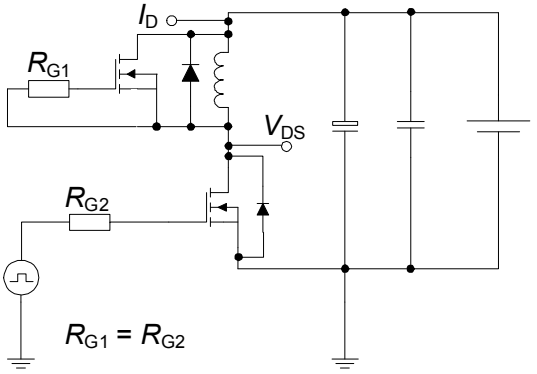	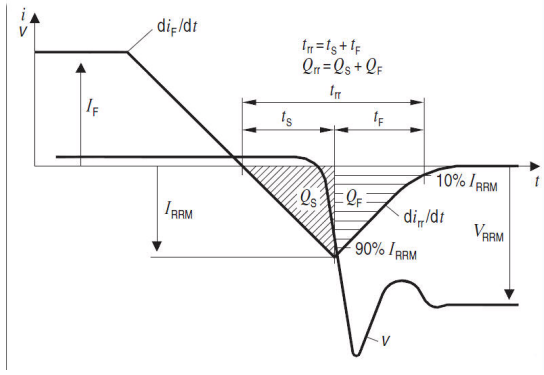

Table 18 Switching times

Switching times test circuit for inductive load	Switching times waveform
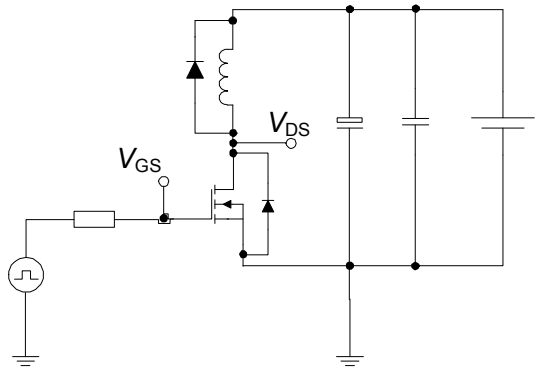	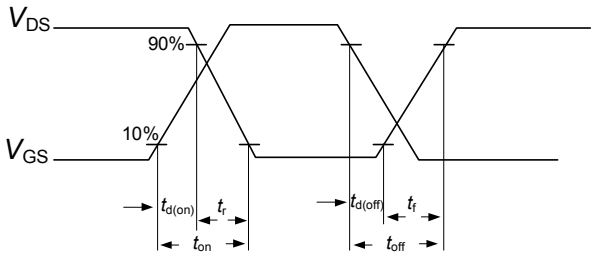

Table 19 Unclamped inductive

Unclamped inductive load test circuit	Unclamped inductive waveform
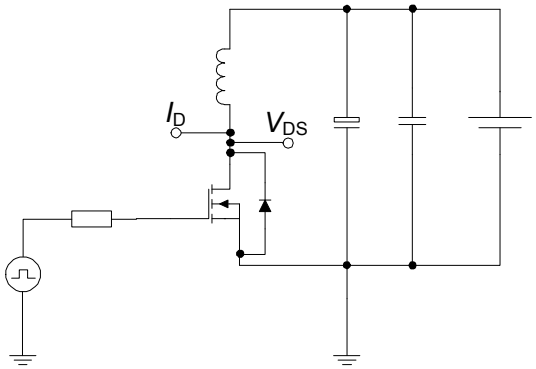	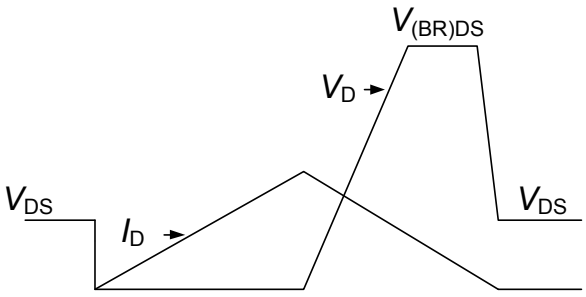

7 Package Outlines

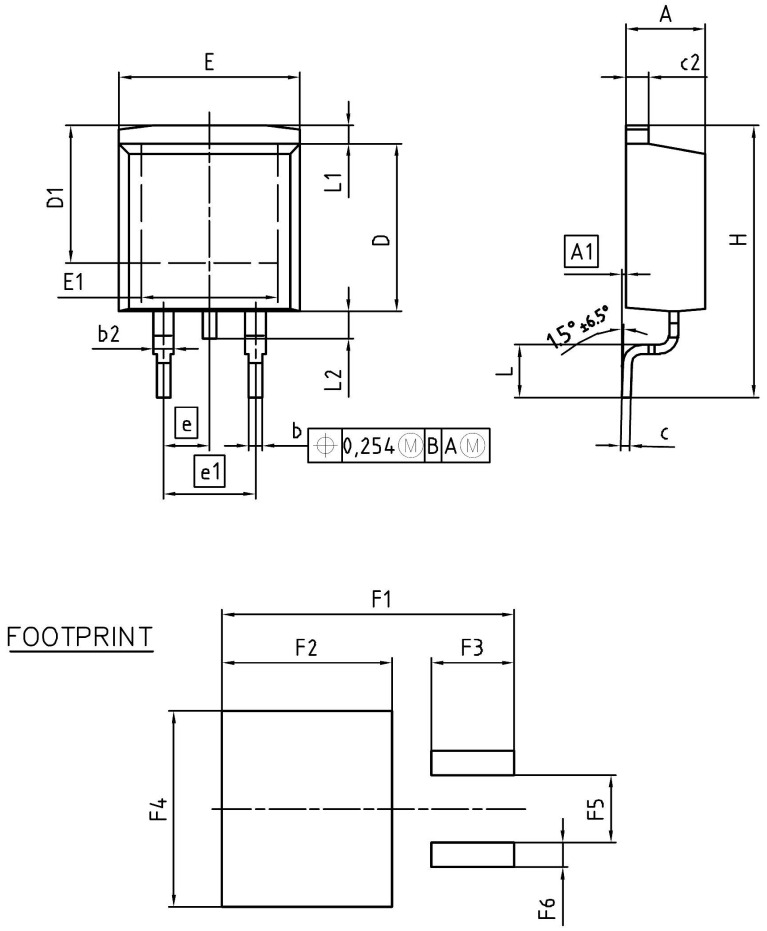

DIM	MILLIMETERS		INCHES	
	MIN	MAX	MIN	MAX
A	4.30	4.57	0.169	0.180
A1	0.00	0.25	0.000	0.010
b	0.65	0.85	0.026	0.033
b2	0.95	1.15	0.037	0.045
c	0.33	0.65	0.013	0.026
c2	1.17	1.40	0.046	0.055
D	8.51	9.45	0.335	0.372
D1	7.10	7.90	0.280	0.311
E	9.80	10.31	0.386	0.406
E1	6.50	8.60	0.256	0.339
e	2.54		0.100	
e1	5.08		0.200	
N	2		2	
H	14.61	15.88	0.575	0.625
L	2.29	3.00	0.090	0.118
L1	0.70	1.60	0.028	0.063
L2	1.00	1.78	0.039	0.070
F1	16.05	16.25	0.632	0.640
F2	9.30	9.50	0.366	0.374
F3	4.50	4.70	0.177	0.185
F4	10.70	10.90	0.421	0.429
F5	3.65	3.85	0.144	0.152
F6	1.25	1.45	0.049	0.057

DOCUMENT NO.
Z8B00003324

SCALE 0 5 7.5mm

EUROPEAN PROJECTION

ISSUE DATE
30-08-2007

REVISION
01

Figure 1 Outline PG-TO 263, dimensions in mm/inches

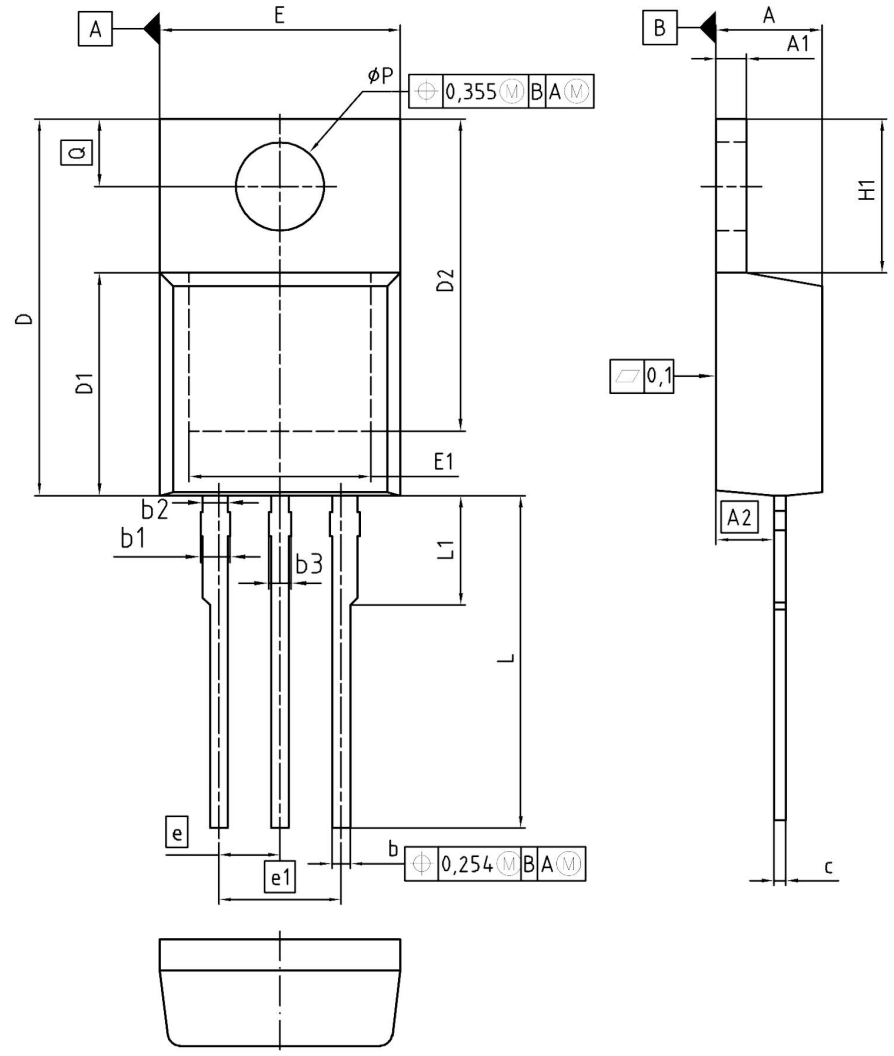

DIM	MILLIMETERS		INCHES	
	MIN	MAX	MIN	MAX
A	4.30	4.57	0.169	0.180
A1	1.17	1.40	0.046	0.055
A2	2.15	2.72	0.085	0.107
b	0.65	0.86	0.026	0.034
b1	0.95	1.40	0.037	0.055
b2	0.95	1.15	0.037	0.045
b3	0.65	1.15	0.026	0.045
c	0.33	0.60	0.013	0.024
D	14.81	15.95	0.583	0.628
D1	8.51	9.45	0.335	0.372
D2	12.19	13.10	0.480	0.516
E	9.70	10.36	0.382	0.408
E1	6.50	8.60	0.256	0.339
e	2.54		0.100	
e1	5.08		0.200	
N	3		3	
H1	5.90	6.90	0.232	0.272
L	13.00	14.00	0.512	0.551
L1	-	4.80	-	0.189
øP	3.60	3.89	0.142	0.153
Q	2.60	3.00	0.102	0.118

DOCUMENT NO.
Z8B00003318

SCALE 0 2.5 5mm

EUROPEAN PROJECTION

ISSUE DATE
30-07-2009

REVISION
06

Figure 2 Outline PG-TO 220, dimensions in mm/inches

Revision History

IPB65R310CFDA, IPP65R310CFDA

Revision: 2012-03-28, Rev. 2.0

Previous Revision		
Revision	Date	Subjects (major changes since last revision)
2.0	2012-03-28	Final datasheet

Disclaimer ATV

We Listen to Your Comments
Any information within this document that you feel is wrong, unclear or missing at all? Your feedback will help us to continuously improve the quality of this document. Please send your proposal (including a reference to this document) to:
erratum@infineon.com

Edition 2011-09-30
Published by
Infineon Technologies AG
81726 München, Germany
© 2011 Infineon Technologies AG
All Rights Reserved.

Legal Disclaimer
The information given in this document shall in no event be regarded as a guarantee of conditions or characteristics ("Beschaffenheitsgarantie"). With respect to any examples or hints given herein, any typical values stated herein and/or any information regarding the application of the device, Infineon Technologies hereby disclaims any and all warranties and liabilities of any kind, including without limitation warranties of non-infringement of intellectual property rights of any third party.
Information
For further information on technology, delivery terms and conditions and prices please contact your nearest Infineon Technologies Office (**www.infineon.com**).

Warnings
Due to technical requirements components may contain dangerous substances. For information on the types in question please contact your nearest Infineon Technologies Office.
Infineon Technologies Components may only be used in life-support devices or systems with the express written approval of Infineon Technologies, if a failure of such components can reasonably be expected to cause the failure of that life-support device or system, or to affect the safety or effectiveness of that device or system. Life support devices or systems are intended to be implanted in the human body, or to support and/or maintain and sustain and/or protect human life.
If they fail, it is reasonable to assume that the health of the user or other persons may be endangered.