Interface RF Connector with Switch, built-in interlock, DC to 3GHz

MS-151NB Series

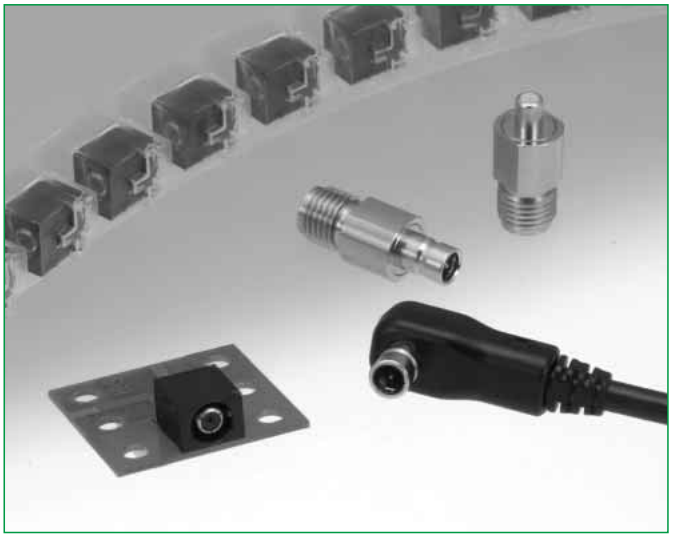

Overview

Designed for end user applications requiring re-direction of transmission from internal built-in antenna to the external antenna. Small size, lightweight and high reliability makes it ideal for use in 2.4 GHz band wireless LAN applications.

Features

1. Confirmation of complete connection

Built-in interlock feature confirms fully mated condition with a "click" sensation.

2. Non-directional connection

The connector can be mated in any position on a 360° axis and can rotate within the same when in use, allowing routing of the connected cable in any direction.

3. High durability

Guaranteed 5000 insertion/removal cycles.

4. Space-saving

The external dimensions of the board-mounted receptacle (5.0 mm high, 6.5 mm wide, 7.0 mm deep) makes it ideal for use in small devices.

5. Board placement with automatic equipment

Packaged on tape-and-reel. Also available with a vacuum pick-up cap over each switch.

6. RoHS compliant

All components and materials comply with the requirements of the EU Directive 2002/95/EC.

Applications

GPS terminals, wireless LAN modules, notebook computers, PDA, and other high frequency equipment.

Plug can be rotated after full insertion.

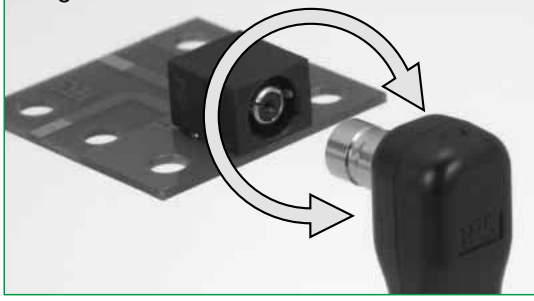

●Receptacle

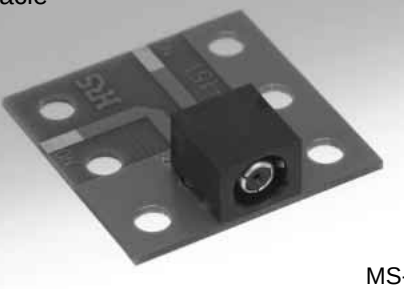

MS-151NB

●Plug



MS-151-C(LP)

●SMA Conversion Adapter
For Receptacle: MS-151NB



MS151P-HRMJ

●SMA Conversion Adapter
For Plug: MS-151-C(LP)



MS151J-HRMJ

Aug.1.2022 Copyright 2022 HIROSE ELECTRIC CO., LTD. All Rights Reserved.

■Product Specifications

Frequency range	DC to 3GHz		
Operating temperature range	–40℃ to +85℃		
Power rating	4W		
		N.C	N.O
V.S.W.R.	DC to 1 GHz	1.2 max.	
	1 GHz to 2 GHz	1.4 max.	
	2 GHz to 3 GHz	1.7 max.	
Insertion loss	DC to 1 GHz	0.2dB max.	0.3dB max.
	1 GHz to 2 GHz	0.4dB max.	0.5dB max.
	2 GHz to 3 GHz	0.6dB max.	1.0dB max.
Isolation loss	DC to 1 GHz	———	20dB min.
	1 GHz to 2 GHz	———	18dB min.
	2 GHz to 3 GHz	———	12dB min.

Item	Specification	Conditions
1. Contact resistance	50 m ohms max.	100 mA
2. Insulation resistance	1000 M ohms min.	100 V DC
3. Withstanding voltage	No flashover or insulation breakdown	100 V AC / 1 minute
4. Vibration	No electrical discontinuity of 10 μs or more	Frequency: 10 to 500 Hz, single amplitude of 0.75 mm, acceleration of 98 m/s2 for 2 hours in each of the 3 directions
5. Shock		Acceleration of 490 m/s², 11 ms duration, sine half-wave waveform, 3 cycles in each of the 3 axis
6. Temperature cycle	Contact resistance: 100 m ohms max. Insulation resistance: 10 M ohms min.	Temperature: -55℃ → +15℃ to +35℃ → +85℃ → +15℃ to +35℃ Time: 30 → 5 max. → 30 → 5 max.(Minutes) 100 cycles
7. Humidity (Steady state)		96 hours at temperature of 40℃ and humidity of 90%
8. Salt spray	Contact resistance: 100 m ohms max. No corrosions	5% salt water solution, 48 hours (at 35℃)
9. Insertion/Withdrawal forces	Insertion force: 1～10N Withdrawal force: 3～15N	With corresponding connector
10. Durability (insertion/ withdrawal)	Contact resistance: 100 m ohms max.	5000 cycles

■Materials

Receptacle MS-151NB

Part	Material	Finish
Insulator	Polyamide (UL94V0)	———
Lock mating section	Stainless steel	Nickel plating (Termination area: Gold-lead plated)
Outer conductor shell	Phosphor bronze	Nickel plating (Termination area: Gold-lead plated)
Contact A	Phosphor bronze	Gold plating
Contact C	Beryllium copper	Gold plating

Plug MS-151-C(LP)

Part	Material	Finish
Cover A	PC	———
Cover B	PC	———
Ring	Stainless steel	Nickel plating
Outer conductor shell	Phosphor bronze	Nickel plating
Inner contact	Phosphor bronze	Gold plating
Insulator	Polyamide (UL 94-HB)	———
Ferrule	Stainless steel	———
Crimp metal fitting	Brass	Nickel plating
Bushing	Polyester	———

Aug.1.2022 Copyright 2022 HIROSE ELECTRIC CO., LTD. All Rights Reserved.

◆Typical data

●NORMALLY CLOSED(N.C) ～ (Not mated with the plug)

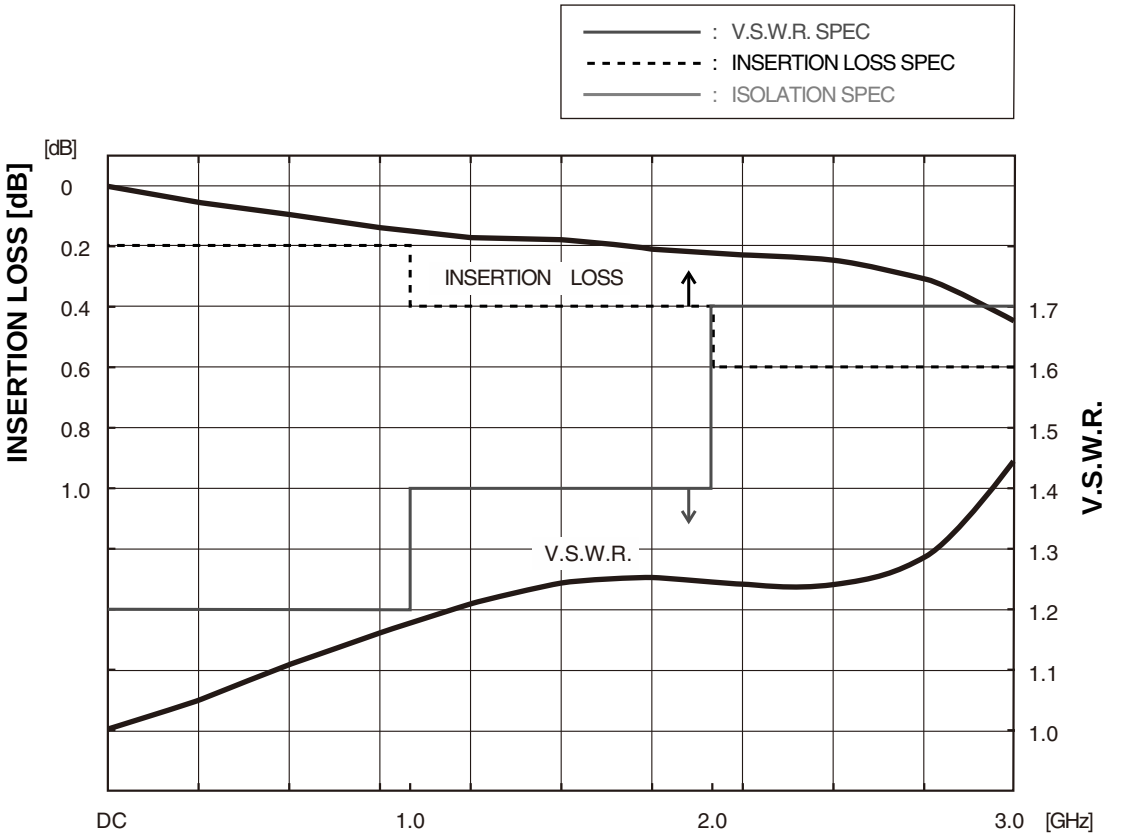

●OPEN(N.O) ～ (Mated with the plug)

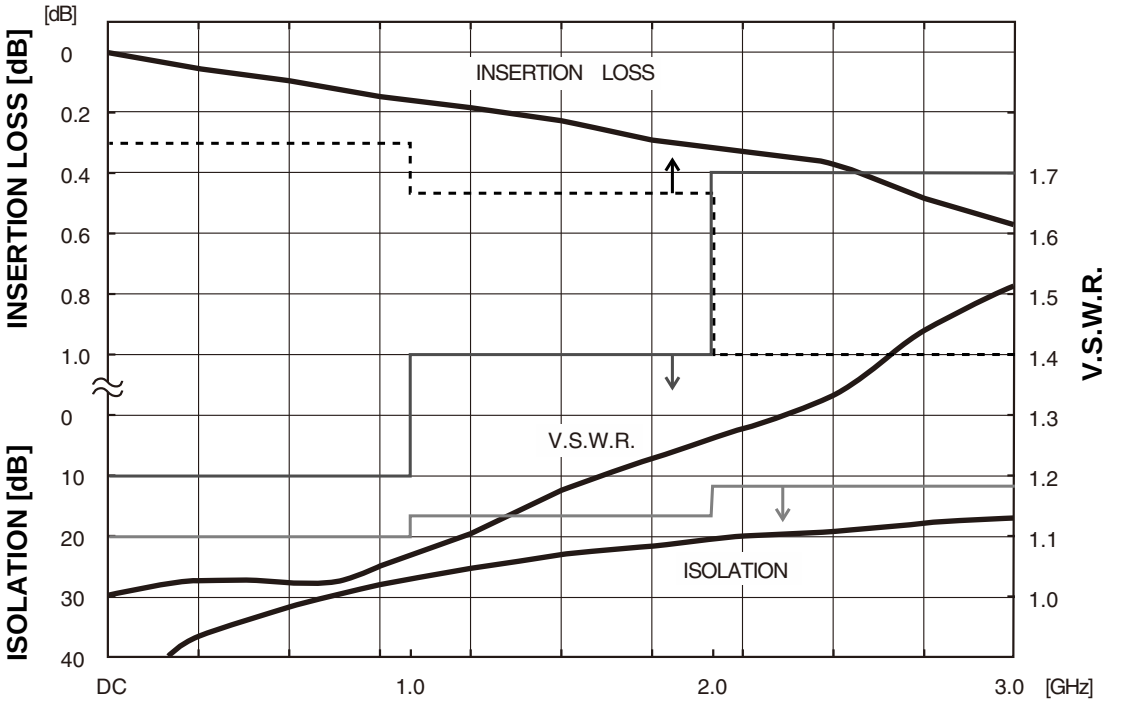

Aug.1.2022 Copyright 2022 HIROSE ELECTRIC CO., LTD. All Rights Reserved.

■Receptacle

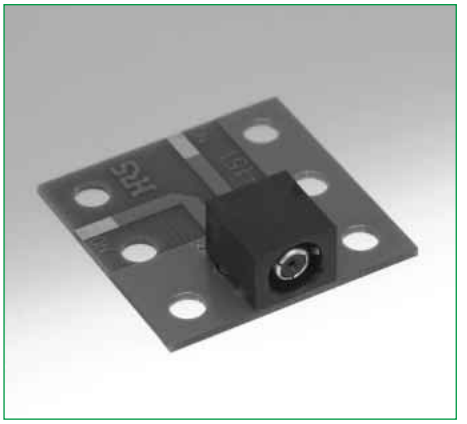

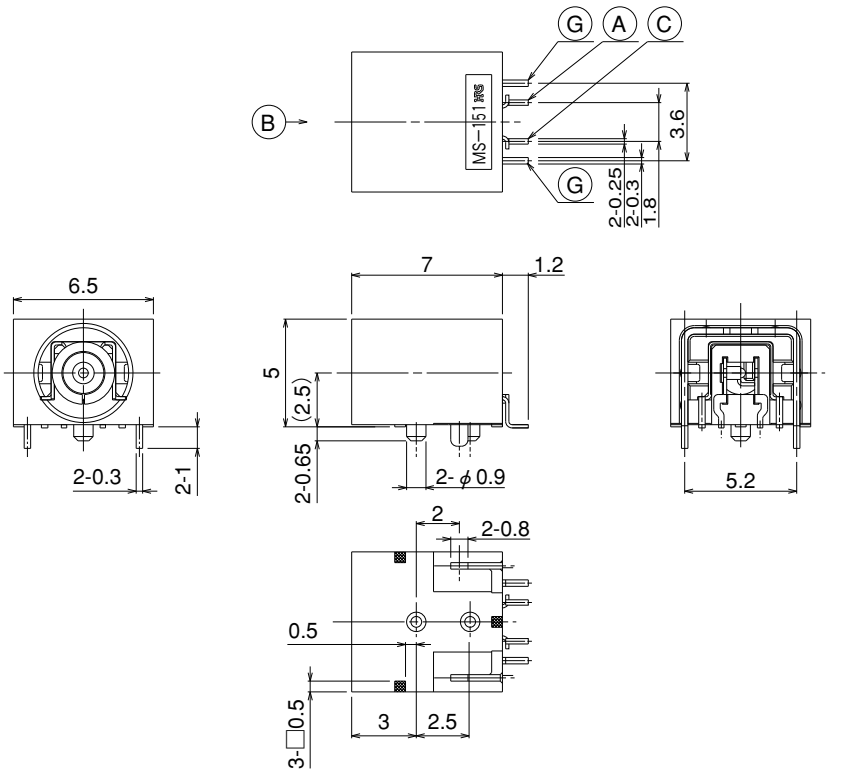

Part Number	HRS No.	Packaging	RoHS
MS-151NB	358-0215-9	1,000 pieces per reel	YES
MS-151NB(01)	358-0215-9-01	100 pieces	

◆Circuit diagram



◆PCB mounting pattern

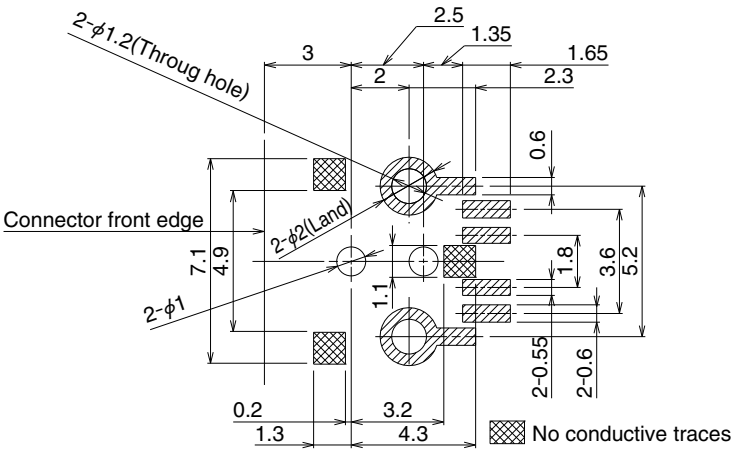

Aug.1.2022 Copyright 2022 HIROSE ELECTRIC CO., LTD. All Rights Reserved.

◆Packaging Specifications

Embossed tape reel packaging (1,000 pieces/reel)

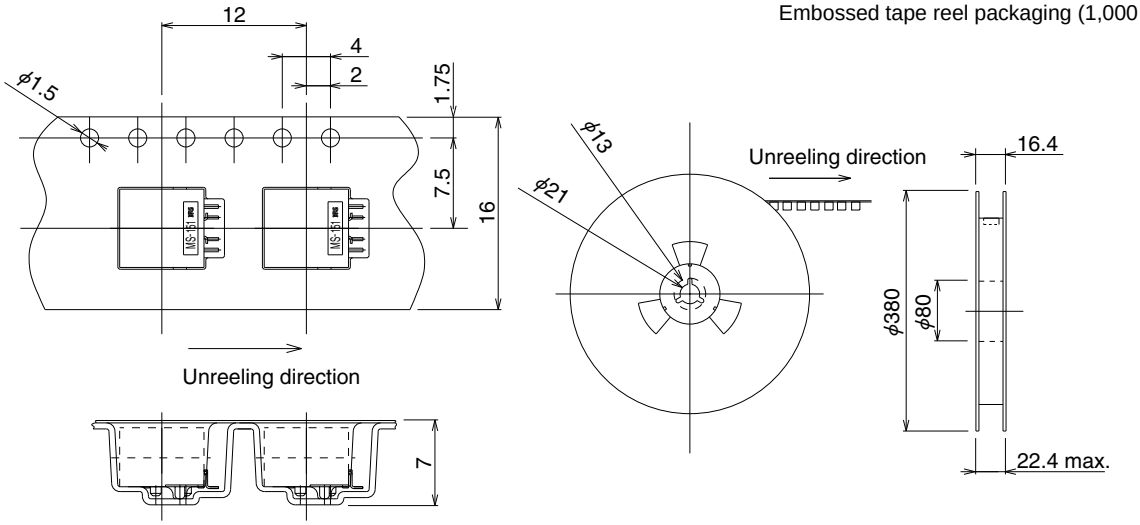

◆Recommended Temperature Profile

Using Lead-free solder paste

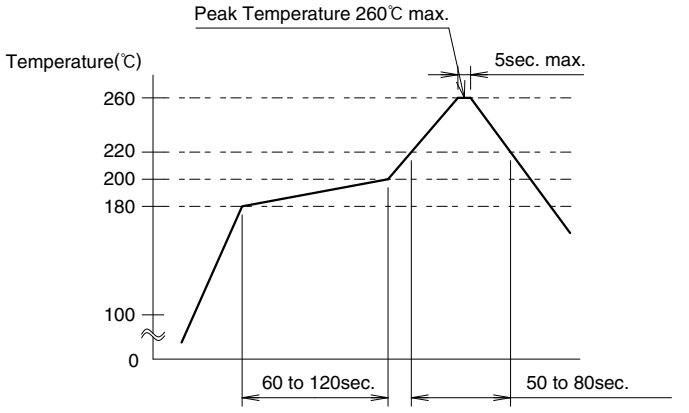

Maximum temperature	: 260℃
Peak temperature	: 240℃ to 255℃
Peak temperature duration	: 5 sec. Max.
200℃ min.	: 50 to 80 sec.
150℃ to 160℃	: 60 to 120sec.

Aug.1.2022 Copyright 2022 HIROSE ELECTRIC CO., LTD. All Rights Reserved.

■Plug



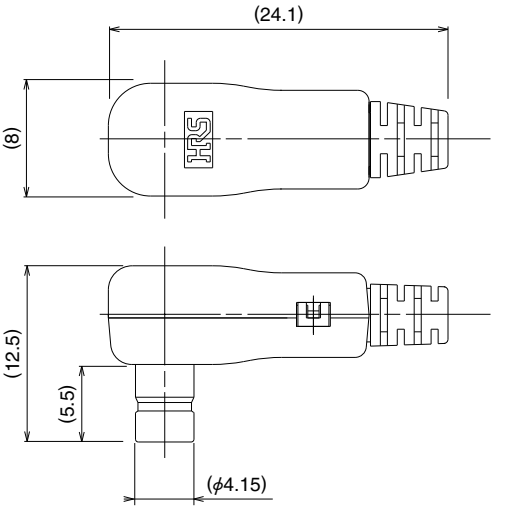

Part Number	HRS No.	Packaging	Applicable cable	RoHS
MS-151-C(LP)	358-0160-9	1	1.5DS-QEHV(TA)	YES

Termination fixture: MS-151/CF-MD, MS-151/SO-MD, MS-151/BE-MP and MS-151/CK-MP
Please contact your Hirose Electric representative for information.

■SMA Conversion adaptors

●For Receptacle: MS-151NB



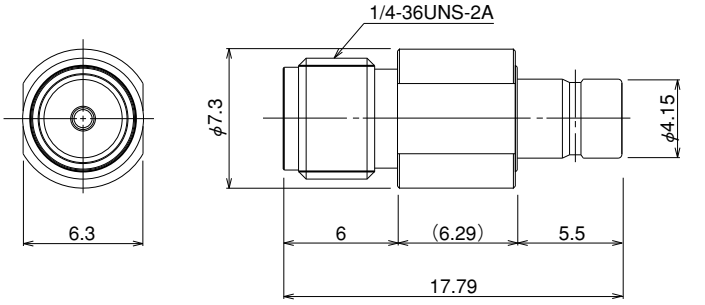

Part Number	HRS No.	Packaging	RoHS
MS151P-HRMJ	355-0089-7	1	YES

●For Plug: MS-151-C(LP)



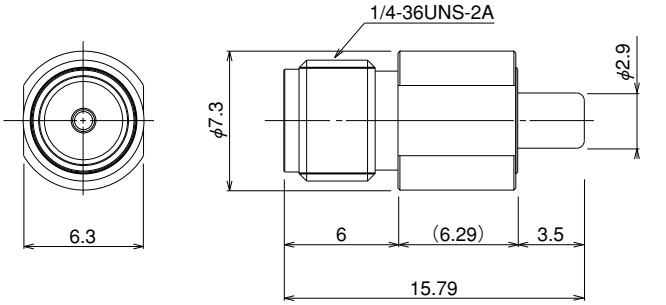

Part Number	HRS No.	Packaging	RoHS
MS151J-HRMJ	355-0088-4	1	YES

Aug.1.2022 Copyright 2022 HIROSE ELECTRIC CO., LTD. All Rights Reserved.