38720

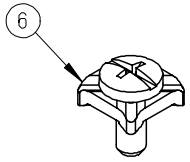

REF -50 OPTION SCREW
(WHERE APPLICABLE)

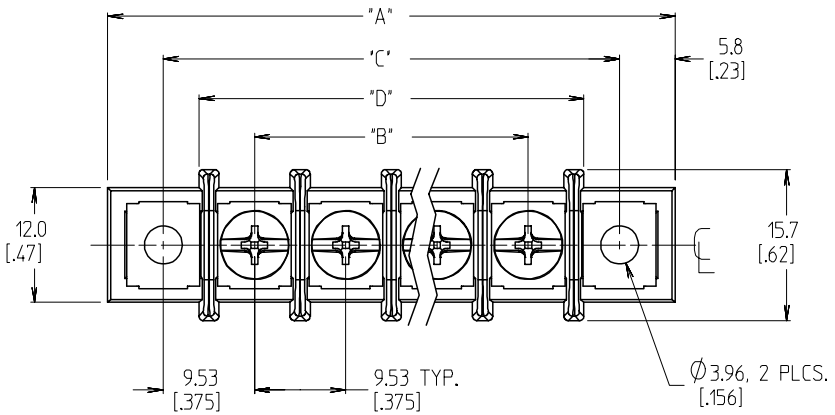

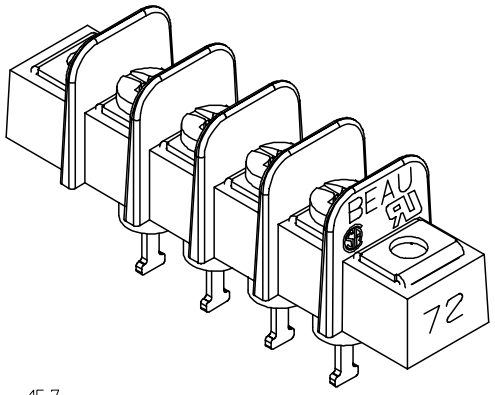

4 CIRCUIT SHOWN

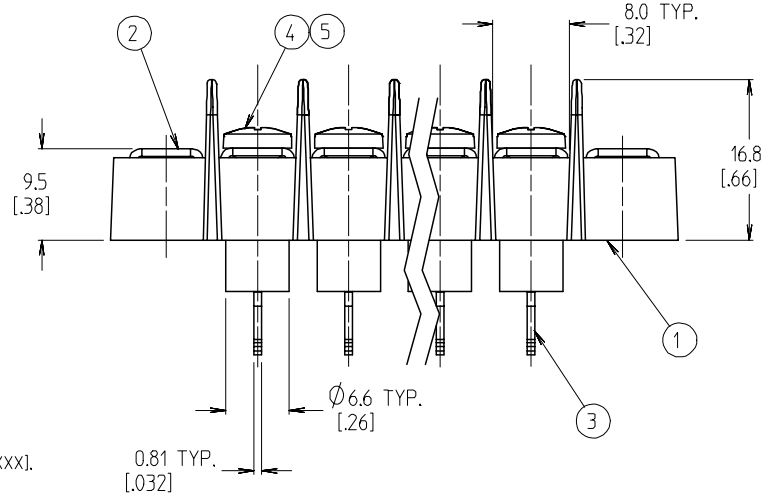

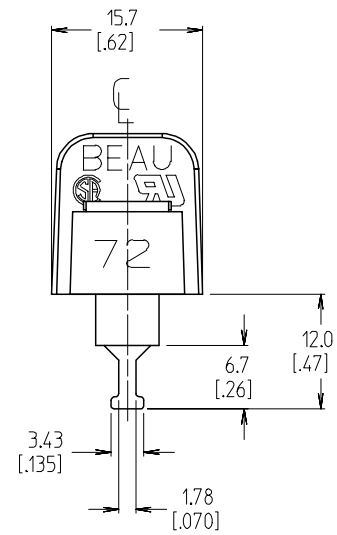

NOTES:

1. MATERIAL: SEE TABLE
2. INCH DIMENSIONS ARE SHOWN IN BRACKETS [.XXX].
3. 'XX' REFERS TO THE QUANTITY OF CIRCUITS.
4. ALL COMPONENTS ARE ROHS COMPLIANT.

ITEM	QTY	DESCRIPTION	MATERIAL	FINISH
6	XX	SCREW&WASHER, 6-32X.250, PAN, PH/SL (-50 OPTION)	STEEL	ZN, CLEAR CHROMATE
5	XX	SCREW, 6-32X.250, BHD, PHIL-SLOT (-49 OPTION)	BRASS	NICKEL
4	XX	SCREW, 6-32X.250, BHD, PHIL-SLOT (STANDARD)	STEEL	ZN, CLEAR CHROMATE
3	XX	TERMINAL, SOLDER TURRET	BRASS	TIN
2	XX	MOUNTING PLATE	BRASS	NICKEL
1	1	INSULATOR, SR, W/MTG	THERMOPLASTIC	BLACK

INITIAL RELEASE
EC NO: ETC2007-0073
DRWN:EHILE 2006/09/28
CH'KD:JMACNEIL 2006/09/28
APPR:JMACNEIL 2006/09/29
REV A
DESCRIPTION

QUALITY SYMBOLS
▼=0
C=0

GENERAL TOLERANCES (UNLESS SPECIFIED)

	mm	INCH
4 PLACES	± ---	± ---
3 PLACES	± ---	± .005
2 PLACES	± 0.13	± .01
1 PLACE	± 0.25	± ---

ANGULAR ± 2 °

DRAFT WHERE APPLICABLE MUST REMAIN WITHIN DIMENSIONS

DIMENSION STYLE: MM/IN
SCALE: 2:1
DESIGN UNITS: INCH
THIRD ANGLE PROJECTION

DRAWN BY: EHILE DATE: 2006/09/13
CHECKED BY: JMACNEIL DATE: 2006/09/13
APPROVED BY: JMACNEIL DATE: 2006/09/13

TITLE: 9.53MM [.375] SR BTS ASSY, INSULATED TURRET TERMINAL W/MTG

molex MOLEX INCORPORATED

MATERIAL NO.: SEE CHART
DOCUMENT NO.: SD-38720-010
SHEET NO.: 1 OF 2

SIZE: B

THIS DRAWING CONTAINS INFORMATION THAT IS PROPRIETARY TO MOLEX INCORPORATED AND SHOULD NOT BE USED WITHOUT WRITTEN PERMISSION

tb_frame_B_P_ME_T
Rev. D 2004/04/02

NO. OF CIRCUITS	DIM. "A"		DIM. "B"		DIM. "C"		DIM. "D"		ASSEMBLY MATERIAL NO. (STANDARD)	ASSEMBLY MATERIAL NO. (-49 OPT)	ASSEMBLY MATERIAL NO. (-50 OPT)
	mm	in	mm	in	mm	in	mm	in			
02	40.1	1.58	9.53	0.375	28.58	1.125	21.1	0.83	387203202	387203502	387203802
03	49.7	1.96	19.05	0.750	38.10	1.500	30.7	1.21	387203203	387203503	387203803
04	59.2	2.33	28.58	1.125	47.63	1.875	40.2	1.58	387203204	387203504	387203804
05	68.7	2.71	38.10	1.500	57.15	2.250	49.7	1.96	387203205	387203505	387203805
06	78.2	3.08	47.63	1.875	66.68	2.625	59.2	2.33	387203206	387203506	387203806
07	87.8	3.46	57.15	2.250	76.20	3.000	68.8	2.71	387203207	387203507	387203807
08	97.3	3.83	66.68	2.625	85.73	3.375	78.3	3.08	387203208	387203508	387203808
09	106.8	4.21	76.20	3.000	95.25	3.750	87.8	3.46	387203209	387203509	387203809
10	116.3	4.58	85.73	3.375	104.78	4.125	97.3	3.83	387203210	387203510	387203810
11	125.9	4.96	95.25	3.750	114.30	4.500	106.9	4.21	387203211	387203511	387203811
12	135.4	5.33	104.78	4.125	123.83	4.875	116.4	4.58	387203212	387203512	387203812
13	144.9	5.71	114.30	4.500	133.35	5.250	125.9	4.96	387203213	387203513	387203813
14	154.4	6.08	123.83	4.875	142.88	5.625	135.4	5.33	387203214	387203514	387203814
15	164.0	6.46	133.35	5.250	152.40	6.000	145.0	5.71	387203215	387203515	387203815
16	173.5	6.83	142.88	5.625	161.93	6.375	154.5	6.08	387203216	387203516	387203816
17	183.0	7.21	152.40	6.000	171.45	6.750	164.0	6.46	387203217	387203517	387203817
18	192.5	7.58	161.93	6.375	180.98	7.125	173.5	6.83	387203218	387203518	387203818
19	202.1	7.96	171.45	6.750	190.50	7.500	183.1	7.21	387203219	387203519	387203819
20	211.6	8.33	180.98	7.125	200.03	7.875	192.6	7.58	387203220	387203520	387203820
21	221.1	8.71	190.50	7.500	209.55	8.250	202.1	7.96	387203221	387203521	387203821
22	230.6	9.08	200.03	7.875	219.08	8.625	211.6	8.33	387203222	387203522	387203822
23	240.2	9.46	209.55	8.250	228.60	9.000	221.2	8.71	387203223	387203523	387203823
24	249.7	9.83	219.08	8.625	238.13	9.375	230.7	9.08	387203224	387203524	387203824
25	259.2	10.21	228.60	9.000	247.65	9.750	240.2	9.46	387203225	387203525	387203825
26	268.7	10.58	238.13	9.375	257.18	10.125	249.7	9.83	387203226	387203526	387203826

INITIAL RELEASE 2006/09/28
EC NO: ETC2007-0073 2006/09/28
DRWN:EHILE CH'KD:JMACNEIL 2006/09/29
APPR: JMACNEIL
DESCRIPTION
A
REV

QUALITY SYMBOLS
▼=0
▽=0

GENERAL TOLERANCES (UNLESS SPECIFIED)

	mm	INCH
4 PLACES	± ---	± ---
3 PLACES	± ---	± .005
2 PLACES	± 0.13	± .01
1 PLACE	± 0.25	± ---
ANGULAR ± 2 °		

DRAFT WHERE APPLICABLE MUST REMAIN WITHIN DIMENSIONS

DIMENSION STYLE: MM/IN
SCALE: 2:1
DESIGN UNITS: INCH
THIRD ANGLE PROJECTION

DRAWN BY: EHILE DATE: 2006/09/13
CHECKED BY: JMACNEIL DATE: 2006/09/13
APPROVED BY: JMACNEIL DATE: 2006/09/13

TITLE: 9.53MM [.375] SR BTS ASSY, INSULATED TURRET TERMINAL W/MTG

MOLEX INCORPORATED

MATERIAL NO.: SEE CHART
DOCUMENT NO.: SD-38720-010
SHEET NO.: 2 OF 2
SIZE: B

THIS DRAWING CONTAINS INFORMATION THAT IS PROPRIETARY TO MOLEX INCORPORATED AND SHOULD NOT BE USED WITHOUT WRITTEN PERMISSION