MATERIAL NO.	ENGINEERING NO.	FINISHED LENGTH
1300250513	DNDF99A-M010	1 M (3 FT 3.37 IN)
1300250333	DNDF99A-M030	3 M (9 FT 10.11 IN)
1300250515	DNDF99A-M050	5 M (16 FT 4.85 IN)

B

CABLE LENGTH TOLERANCES
<.3M [1FT]: +19mm-0 [+.75in-0]
.3 - .9M [1 - 3FT]: +44.5mm-0 [+1.75in-0]
.9 - 1.8M [3 - 6FT]: +55.6mm-0 [+2.19in-0]
1.8 - 3.7M [6 - 12FT: +88.9mm-0 [+3.50in-0]
3.7 - 7.3M [12 - 24FT]: +165.1mm-0 [+6.50in-0]
7.3-14.6M [24 - 48FT]: +317.5mm-0 [+12.50in-0]
14.6 - 30.5M [48-100FT]: +622.3mm-0 [+24.50in-0]
OVER 30M [100FT] +2% OF FINISHED LENGTH

B

PART NUMBER LEGEND B

DNDF99A-M010

FINISHED LENGTH
M005= 0.5 M
M010= 1 M
M100= 10M

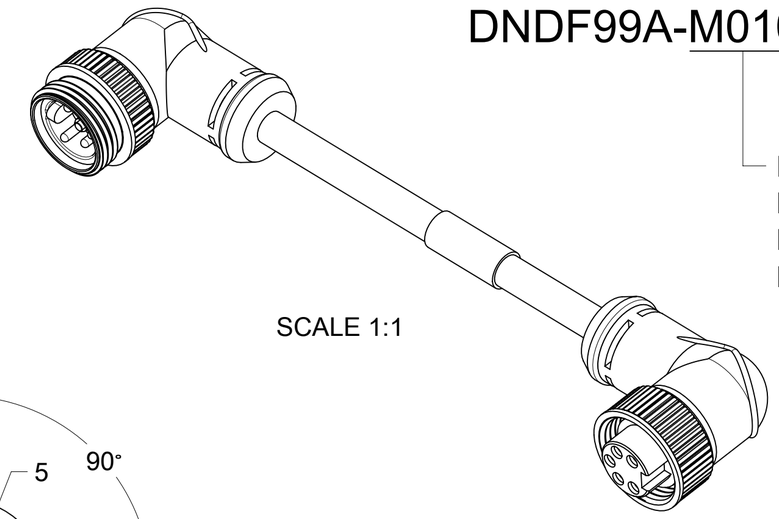

SCALE 1:1

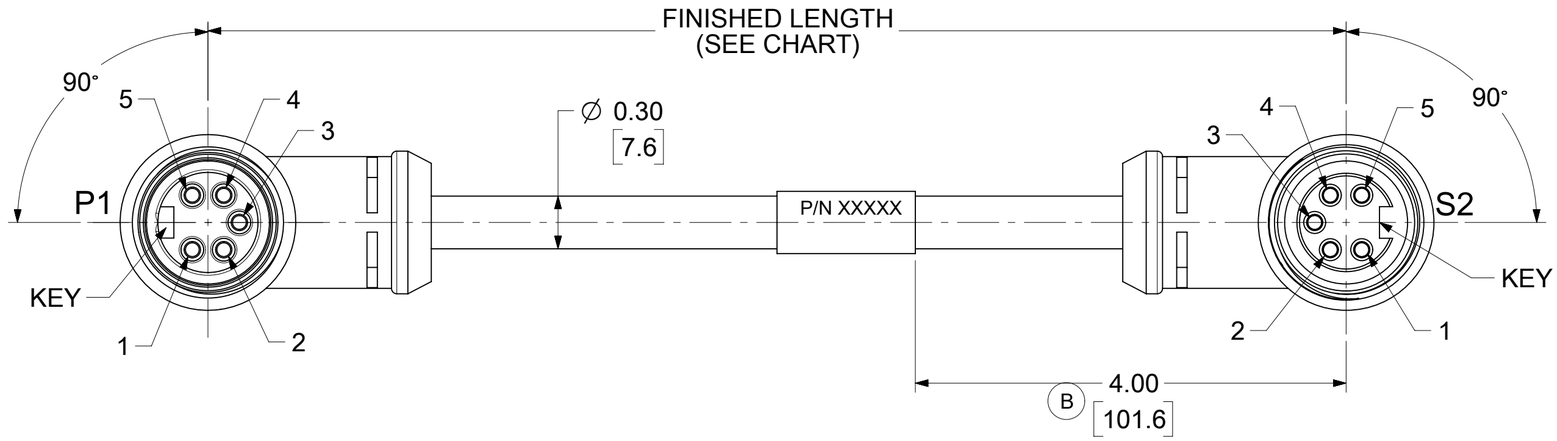

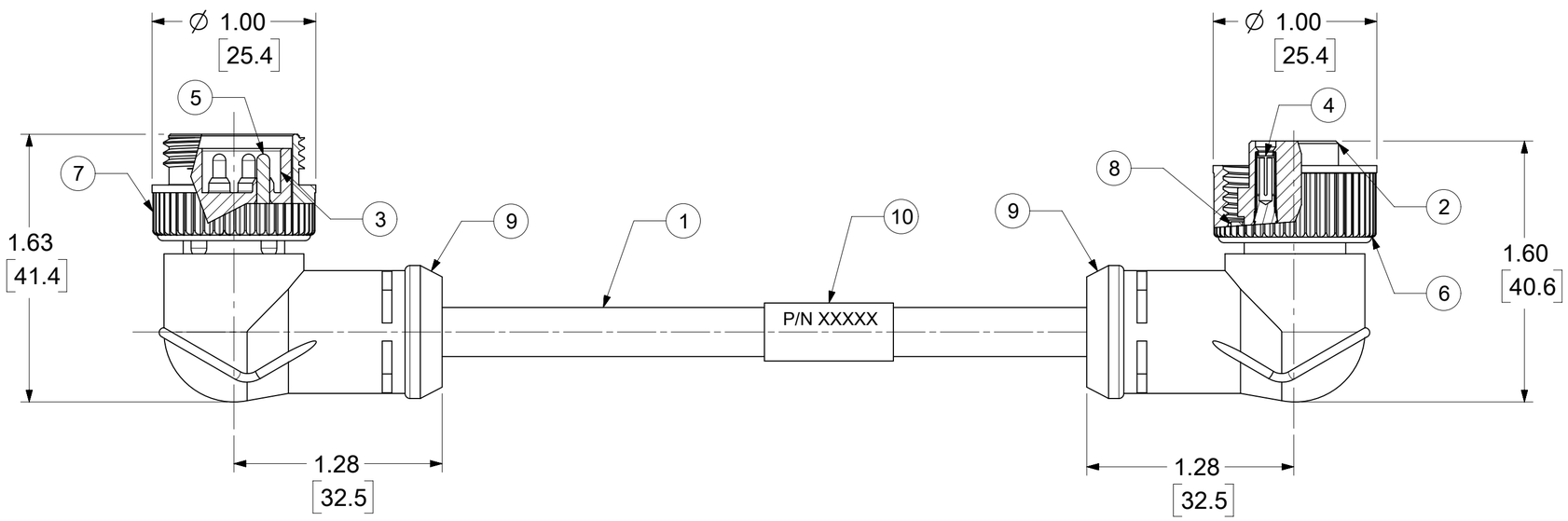

WIRING DIAGRAM

P1		S2
1	DRAIN	1
2	RED +V	2
3	BLACK -V	3
4	WHITE CAN H	4
5	BLUE CAN L	5

NOTES:
1. MATERIAL: AS NOTED
2. FINISH: AS NOTED
3. ELECTRICAL:
   VOLTAGE: 300V PER IEC60664
   300V PER UL2238 B
   CURRENT RATING: 4A
4. TEMP RATING: -20° TO +80°C B
5. PROTECTION: IP67 (WHEN MATED) B
6. COUPLING THREAD: 7/8-16UN
7. CSA CERTIFIED FILE: LR6837 B
8. ALL DIMENSIONS ARE FOR REFERENCE UNLESS TOLERANCED OR NOTED OTHERWISE

ITEM	DESCRIPTION	MATERIAL	FINISH	
10	WRAP LABEL	VINYL	BLACK/YELLOW	
9	OVERMOLD	TPE	GRAY	B
8	FRICTION RING	NYLON	WHITE	
7	COUPLING NUT MALE	ZINC DIE CAST	BLACK E-COAT	
6	COUPLING NUT FEMALE	ZINC DIE CAST	BLACK E-COAT	
5	PIN CONTACT 22AWG	Cu ALLOY	GOLD OVER NICKEL	
4	CONTACT SOCKET 22AWG	Cu ALLOY	GOLD OVER NICKEL	
3	MALE INSERT	TPE	BLACK	B
2	FEMALE INSERT	TPE	BLACK	B
1	CABLE, DEV-NET, DROP, FLEX, 4/22	TPE JACKET	GRAY	

DOCUMENT STATUS	P1	RELEASE DATE	2022/06/24	12:55:23

FUNCTIONAL SYMBOLS
FA = 0
FC = 0
FP = 0
DIVISIONAL SYMBOLS

THIS DRAWING CONTAINS INFORMATION THAT IS PROPRIETARY TO MOLEX ELECTRONIC TECHNOLOGIES, LLC AND SHOULD NOT BE USED WITHOUT WRITTEN PERMISSION

DIMENSION UNITS: mm
SCALE: 1.5:1

GENERAL TOLERANCES (UNLESS SPECIFIED)

	MM	INCH
4 PLACES	±	±
3 PLACES	±	±
2 PLACES	±	±
1 PLACE	±	±
0 PLACES	±	±
ANGULAR TOL	± °	

DRAFT WHERE APPLICABLE MUST REMAIN WITHIN DIMENSIONS

CURRENT REV DESC: ITEM #2,3,9 WERE PVC, UPDATED LABEL DIM. MATERIAL P/N TABLE. ADDED CSA, IEC VOLT, TEMP RATING, IP RATING, TOL. CHART & PART NUMBER LEGEND

EC NO: 711366
DRWN: AKABADI 2021/10/13
CHK'D: RSTONE 2022/06/21
APPR: BWOODMAN 2022/06/24

INITIAL REVISION:
DRWN: RSTONE 2009/07/31
APPR: JFMURPHY 2009/08/10

THIRD ANGLE PROJECTION

DRAWING	SERIES
C-SIZE	130025

molex

MINI-CHANGE DEVICENET CORDSET, A SIZE
5 POLE, MALE/FEMALE, 90 DEG, SINGLE KEY, 22AWG

PRODUCT CUSTOMER DRAWING

DOCUMENT NUMBER	DOC TYPE	DOC PART	REVISION
SD-130025-024	PSD	001	B

MATERIAL NUMBER	CUSTOMER	SHEET NUMBER
SEE TABLE	GENERAL MARKET	1 OF 1

FORMAT: Eng-lega-master-tb-prod-C
REVISION: B
DATE: 2020/01/4