APPROVED: _____

DATE: _____ TITLE: _____

Rev	AWO #	Description	Date	Appr
-		RELEASED	10/02/12	
A		UPDATE DIM.	3/14/18	AY/DH
B		UPDATE DIM.	7/15/21	LH/RL

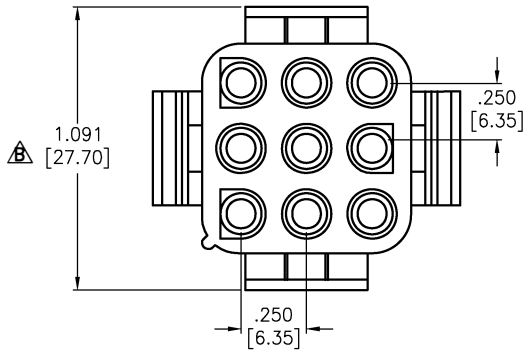

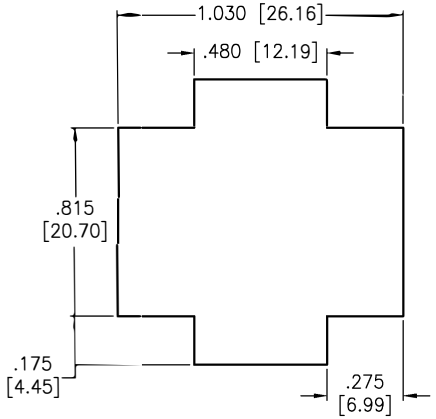

Panel hole dimensions

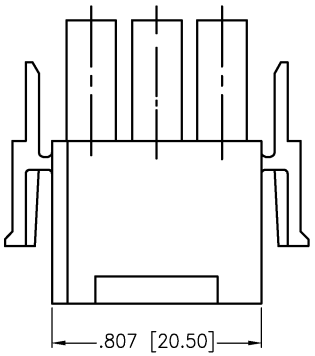

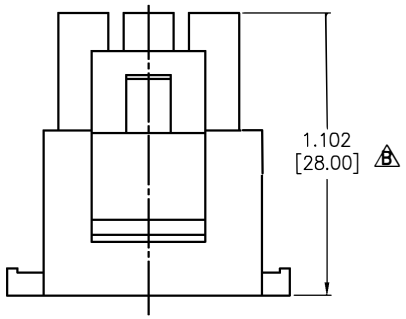

SPECIFICATIONS:
Material:
Insulator: Nylon66, rated UL 94V-2
Insulator color: Natural
Electrical:
Voltage Rating: 600V Max.
Current rating: 11 Amps Max.
Insulation resistance: 1,000M ohms min
Dielectric withstanding voltage: 5,000 VAC for 1 minute
Temperature Rating:
Operating temperature: -55°C to +105°C
Environmental:
Lead free, RoHS compliant.

RoHS COMPLIANT

UNLESS OTHERWISE SPECIFIED ALL DIMENSIONS ARE INCHES [MM]. TOLERANCES: EXCEPT AS NOTED

INCHES		HOLES	
.X	± .10	Ø.X	±.10
.XX	± .020	Ø.XX	±.015
.XXX	± .015	Ø.XXX	±.010

DRAWN	TW	10/02/12
CHECKED	AY	10/02/12
APPROVED		

THIS DRAWING CONTAINS INFORMATION THAT IS PROPRIETARY AND SHOULD NOT BE USED WITHOUT PRIOR WRITTEN PERMISSION FROM ADAM TECH

ADAM TECH
909 Rahway Avenue,
Union, NJ 07083
Phone: 908-687-5000
Fax: 908-687-5710

TITLE: .250 [6.35MM] PITCH CONNECTOR, 9 POS HOUSINGS, MALE, VERTICAL

SIZE	PART NO.	REV.
X	DME-M-09-SQ	B

REF:	SCALE:	SHEET
S00123T	NTS	1 OF 1