Description

The 8V97053L is a high performance Wideband RF Synthesizer / PLL optimized for use as the local oscillator (LO) in Multi-Carrier, Multi-mode FDD & TDD Base Station radio card. It is offered in a compact 5x5, 32-VFQFN package.

The 8V97053L Wideband RF Synthesizer / PLL offers a default Fractional Mode with the option to use it with an Integer mode. It requires an external loop filter.

The 8V97053L with integrated Voltage Controlled Oscillator (VCO) supports output frequencies from 34.375MHz to 4400MHz and maintains superior phase noise and spurious performance.

$RF_OUT_{[A:B]}$ output drivers have independently programmable output power ranging from –4dBm to +7dBm. The RF_OUT outputs can be muted. The mute function is accessible via a SPI command or mute pin.

The operation of the 8V97053L is controlled by writing to registers through a 3-wire SPI interface. The 8V97053L also has an additional option that allows users to read back values from registers by configuring the MUX_OUT pin as a SDO for the SPI interface. The SPI interface is compatible with 1.8V logic and tolerant to 3.3V.

In multi-service base stations, very low noise oscillators are required to generate a large variety of frequencies to the mixers while maintaining excellent phase noise performance and low power. The 8V97053L offers a large tuning range capable of providing multi-band local oscillator (LO) frequency synthesis in multi-mode base stations, thus limiting the use of multiple narrow band RF Synthesizers and reducing the BOM complexity and cost. The device can operate over -40°C to +85°C industrial temperature range.

Applications

- Wireless Infrastructure
- Test Equipment
- CATV Equipment
- Military and Aerospace
- Wireless LAN
- Clock Generation

Features

- Dual Differential Outputs
- Output frequency range: 34.375MHz to 4400MHz (continuous range)
- RF Output Divide by 1, 2, 4, 8, 16, 32, 64
- Open Drain Outputs (see Output Distribution Section)
- Fractional-N synthesizer (also supports Integer-N mode)
- 16-bit integer and 12-bit fractional (16-bit fractional when using the extended registers)
- 3- or 4-wire SPI interface (compatible with 3.3V and 1.8V)
- Single 3.3V supply
- Logic compatibility: 1.8V
- Integrated high performance low dropout regulators (LDOs) for excellent power supply noise rejection
- Programmable output power level: -4dBm to +5dBm (up to +7 when using the extended registers)
- Mute Function
- Ultra low PN for 1.65GHz LO: -142.21dBc/Hz @ 1MHz Offset, (typical)
- Lock Detect Indicators
- Input Reference frequency: 5MHz to 310MHz
- 32-Lead, 5x5 VFQFN package
- Automatic VCO band selection (Autocal feature)
- -40°C to +85°C ambient operating temperature
- Lead-free (RoHS 6) packaging
- Supports case temperature ≤ 105°C operations

© 2019 Renesas Electronics Corporation

Table of Contents

Description . . . 1
Applications . . . 1
Features . . . 1
8V97053L Block Diagram . . . 6
Pin Assignment . . . 6
Pin Description and Characteristic Tables . . . 7
Table 1. Pin Description . . . 7
Table 2. Pin Characteristics . . . 8
Table 3. Supply Pins and Associated Current Return Paths . . . 8
Principles of Operation . . . 9
Synthesizer Programming . . . 9
Reference Input Stage . . . 9
Reference Doubler . . . 10
Table 4A. Lock Detect Precision (LDP) . . . 10
Feedback Divider . . . 11
Figure 1. RF Feedback N Divider . . . 11
Table 4B. Fractional Spurs Due to the Quantization Noise . . . 12
Phase and Frequency Detector (PFD) and Charge Pump . . . 12
Figure 2. Simplified PFD Circuit using D-type Flip-flop . . . 12
PFD Frequency . . . 13
External Loop Filter . . . 13
Phase Detector Polarity . . . 13
Charge Pump High-Impedance . . . 13
Integrated Low Noise VCO . . . 13
Output Distribution Section . . . 14
Figure 3. Output Clock Distribution . . . 14
Figure 4. Output Stage . . . 14
Output Matching . . . 15
Figure 5. Broadband Matching Termination . . . 15
Figure 6. Optimal Matching Termination . . . 15
Band Selection Disable . . . 15
Phase Adjust . . . 16
Phase Resync . . . 16
Figure 7. 12-bit Counter for Fast Lock and Phase Resync . . . 16
Fast Lock Function . . . 17
Figure 8. Example of Fast Lock Mode Loop Filter Topology . . . 17
RF Output Power . . . 18
MUX_OUT . . . 18
Table 4C. MUX_OUT Pin Configuration . . . 18
Power-Down Mode . . . 18
Default Power-Up Conditions . . . 19
Program Modes . . . 19
Table 4D. Control Bits Configuration . . . 19

Timing Characteristics . . . 20
Figure 9. SPI Write Cycle Timing Diagram . . . 20
Figure 10. SPI Read Cycle Timing Diagram . . . 20
Table 4E. SPI Read / Write Cycle Timing Parameters . . . 20
3- or 4-Wire SPI Interface Description . . . 21
Table 4F. SPI Mode Serial Word Structure . . . 21
Register Map . . . 22
Register 0 . . . 22
Table 5A. Register 0 Bit Allocation . . . 22
Table 5B. Register 0: 16-Bit Feedback Divider Integer Value (INT). Function Description . . . 22
Table 5C. Register 0: 12-Bit Feedback Divider Fractional Value (FRAC). Function Description . . . 22
Table 5D. Register 0: 3-Bit Control Bits. Function Description . . . 23
Register 1 . . . 24
Table 6A. Register 1 Bit Allocation . . . 24
Table 6B. Register 1: 1-Bit BAND_SEL_DISABLE. Function Description . . . 24
Table 6C. Register 1: 12-Bit Phase Value (PHASE). Function Description . . . 24
Table 6D. Register 1: 12-Bit Modulus Value (MOD). Function Description . . . 25
Table 6E. Register 1: 3-Bit Control Bits. Function Description . . . 25
Register 2 . . . 26
Table 7A. Register 2 Bit Allocation . . . 26
Table 7B. Register 2: 2-Bit NOISE MODE. Function Description . . . 26
Table 7C. Register 2: 3-Bit MUX_OUT. Function Description . . . 26
Table 7D. Register 2: 1-Bit REF DOUBLER. Function Description . . . 27
Table 7E. Register 2: 1-Bit REF DIV2. Function Description . . . 27
Table 7F. Register 2: 10-Bit R COUNTER (R). Function Description . . . 27
Table 7G. Register 2: 1-Bit DOUBLE BUFFER. Function Description . . . 27
Table 7H. Register 2: 4-Bit Charge Pump Setting (ICP SETTING). Function Description . . . 28
Table 7I. Register 2: 1-Bit Lock Detect Function (LDF). Function Description . . . 28
Table 7J. Register 2: 1-Bit Lock Detect Precision. Function Description . . . 28
Table 7K. Register 2: 1-Bit Phase Detector Polarity. Function Description . . . 28
Table 7L. Register 2: 1-Bit Power Down. Function Description . . . 29
Table 7M. Register 2: 1-Bit Charge Pump High-Impedance. Function Description . . . 29
Table 7N. Register 2: 3-Bit Control Bits. Function Description . . . 29
Register 3 . . . 30
Table 8A. Register 3 Bit Allocation . . . 30
Table 8B. Register 3: 1-Bit Band Select Clock Mode. Function Description . . . 30
Table 8C. Register 3: 2-Bit Clock Divider Mode. Function Description . . . 30
Table 8D. Register 3: 12-Bit Clock Divider Value (CLKDIV). Function Description . . . 30
Table 8E. Register 3: 3-Bit Control Bits. Function Description . . . 31
Register 4 . . . 32
Table 9A. Register 4 Bit Allocation . . . 32
Table 9B. Register 4: 1-Bit Feedback Select. Function Description . . . 32
Table 9C. Register 4: 3-Bit RF Output Divider (÷ MO) Select. Function Description . . . 32
Table 9D. Register 4: 8-Bit Band Select Clock Counter. Function Description . . . 33
Table 9E. Register 4: 1-Bit VCO Power Down. Function Description . . . 33
Table 9F. Register 4: 1-Bit Mute Till Lock Detect. Function Description . . . 33
Table 9G. Register 4: 1-Bit RF_OUTB Select. Function Description . . . 33

Table 9H. Register 4: 1-Bit RF_OUTB Enable. Function Description . . . 33
Table 9I. Register 4: 1-Bit RF_OUTA Enable. Function Description . . . 33
Table 9I. Register 4: 1-Bit RF_OUTA Enable. Function Description . . . 33
Table 9J. Register 4: 2-Bit RF_OUTA Output Power. Function Description . . . 34
Table 9K. Register 4: 3-Bit Control Bits. Function Description . . . 34
Register 5 . . . 35
Table 10A. Register 5 Bit Allocation . . . 35
Table 10B. Register 5: 2-Bit LD (Lock Detect) Pin Mode. Function Description . . . 35
Table 10C. Register 5: 3-Bit Control Bits. Function Description . . . 35
Extended Registers, (Registers 6 and 7) . . . 36
Register 6 . . . 36
Table 11A. Register 6 Bit Allocation . . . 36
Table 11B. Register 6: 1-Bit Digital Lock Detect. Function Description . . . 36
Table 11C. Register 6: 1-Bit Band Select Status (Read Only). Function Description . . . 36
Table 11D. Register 6: 2-Bit Extra Lock Detect Precision. Function Description . . . 37
Table 11E. Register 6: 1-Bit Extra Bit of RF_OUTB Power. Function Description . . . 37
Table 11F. Register 6: 1-Bit Extra Bit of RF_OUTA Power. Function Description . . . 38
Table 11G. Register 6: 2-Bit Sigma Delta Modulator Order Configuration. Function Description . . . 38
Table 11H. Register 6: 2-Bit Dither Gain Configuration. Function Description . . . 38
Table 11I. Register 6: 1-Bit Dither Noise Shaping Configuration. Function Description . . . 38
Table 11J. Register 6: 1-Bit Sigma Delta Modulator Type Configuration. Function Description . . . 38
Table 11K. Register 6: 2-Bit VCO Band Selection Accuracy Configuration. Function Description . . . 39
Table 11N. Register 6: 4-Bit Extra Most Significant Bits of Band Select Divider. Function Description . . . 39
Table 11O. Register 6: 3-Bit Control Bits. Function Description . . . 39
Register 7 . . . 40
Table 12A. Register 7 Bit Allocation. . . . 40
Table 12B. Register 7: 1-Bit Loss of Digital Lock. Function Description . . . 40
Table 12C. Register 7: 1-Bit Loss of Analog Lock. Function Description . . . 40
Table 12D. Register 7: 1-Bit SPI Error. Function Description . . . 40
Table 12E. Register 7: 3-Bit Revision ID. Function Description . . . 41
Table 12F. Register 7: 4-Bit Device ID. Function Description . . . 41
Table 12G. Register 7: 1-Bit Resolution Select. Function Description. . . . 41
Table 12J. Register 7: 4-Bit Extra Bits of MOD Value. Function Description. . . . 42
Table 12K. Register 7: 4-Bit Extra Bits of FRAC Value. Function Description. . . . 42
Table 12L. Register 7: 1-Bit SCLKE. Function Description . . . 43
Table 12M. Register 7: 1-Bit READBACK_ADDR. Function Description . . . 43
Table 12N. Register 7: 1-Bit SPI_R_WN. Function Description . . . 43
Table 12O. Register 7: 3-Bit Control Bits. Function Description . . . 43
Absolute Maximum Ratings . . . 44
Table 13. Absolute Maximum Ratings . . . 44
DC Electrical Characteristics . . . 45
Table 14A. Power Supply DC Characteristics, $V_{DDX} = V_{DDA} = 3.3V \pm 5\%$, $T_A = -40°C$ to $+85°C$ . . . 45
Table 14B. Output Divider Incremental Current . . . 45
Table 14C. Typical Current by Power Domain . . . 46
Table 14D. LVCMOS DC Characteristics, $V_{DDX} = V_{DDA} = 3.3V \pm 5\%$, $T_A = -40°C$ to $85°C$ . . . 46

AC Electrical Characteristics . . . 47
Table 15A. AC Characteristics, V_{DDX} = V_{DDA} = 3.3V ± 5%, T_A = -40°C to 85°C. . . . 47
Table 15B. RF_OUT[A:B] Phase Noise and Jitter Characteristics, V_{DDX} = V_{DDA} = 3.3V ± 5%, TA = -40°C to 85°C . . . 48
Phase Noise (Closed-Loop) at 156.25MHz (3.3V) . . . 50
Phase Noise (Closed-Loop) at 1.76GHz (3.3V) . . . 50
Phase Noise (Closed-Loop) at 2.05GHz (3.3V) . . . 51
Phase Noise (Open-Loop) at 745MHz (3.3V) . . . 51
Phase Noise Performance (Open-Loop) at 1.1GHz (3.3V) . . . 52
Phase Noise Performance (Open-Loop) at 1.65GHz (3.3V) . . . 52
Phase Noise Performance (Open-Loop) at 2.3GHz (3.3V) . . . 53
Phase Noise Performance (Open-Loop) at 3.8GHz (3.3V) . . . 53
Phase Noise Performance (Open-Loop) at 4.4GHz (3.3V) . . . 54
Applications Information . . . 55
Loop Filter Calculations . . . 55
2nd Order Loop Filter . . . 55
Figure 11. Typical 2nd Order Loop Filter . . . 55
3rd Order Loop Filter . . . 57
Figure 12. Typical 3rd Order Loop Filter . . . 57
Recommendations for Unused Input and Output Pins . . . 57
Schematic Example . . . 58
Figure 13A. An 8V97053L General Application Schematic Example . . . 59
Figure 13B. Schematic Example for Driving Single Ended Mixer . . . 60
Power Considerations . . . 61
Table 16. Thermal Resistance θ_{JA} for 32 Lead VFQFN, Forced Convection . . . 61
Example 2: VCO Frequency Range = 2590MHz to 3624MHz . . . 62
Reliability Information . . . 63
Table 17A. θ_{JA} vs. Air Flow Table for a 32 lead VFQFN . . . 63
Table 17B. θ_{JB} vs. Air Flow Table for a 32 lead VFQFN . . . 63
Package Outline Drawings . . . 63
Ordering Information . . . 63
Table 18. Ordering Information . . . 63
Table 19. Pin 1 Orientation in Tape and Reel Packaging . . . 64
Contact Information . . . 68

8V97053L Block Diagram

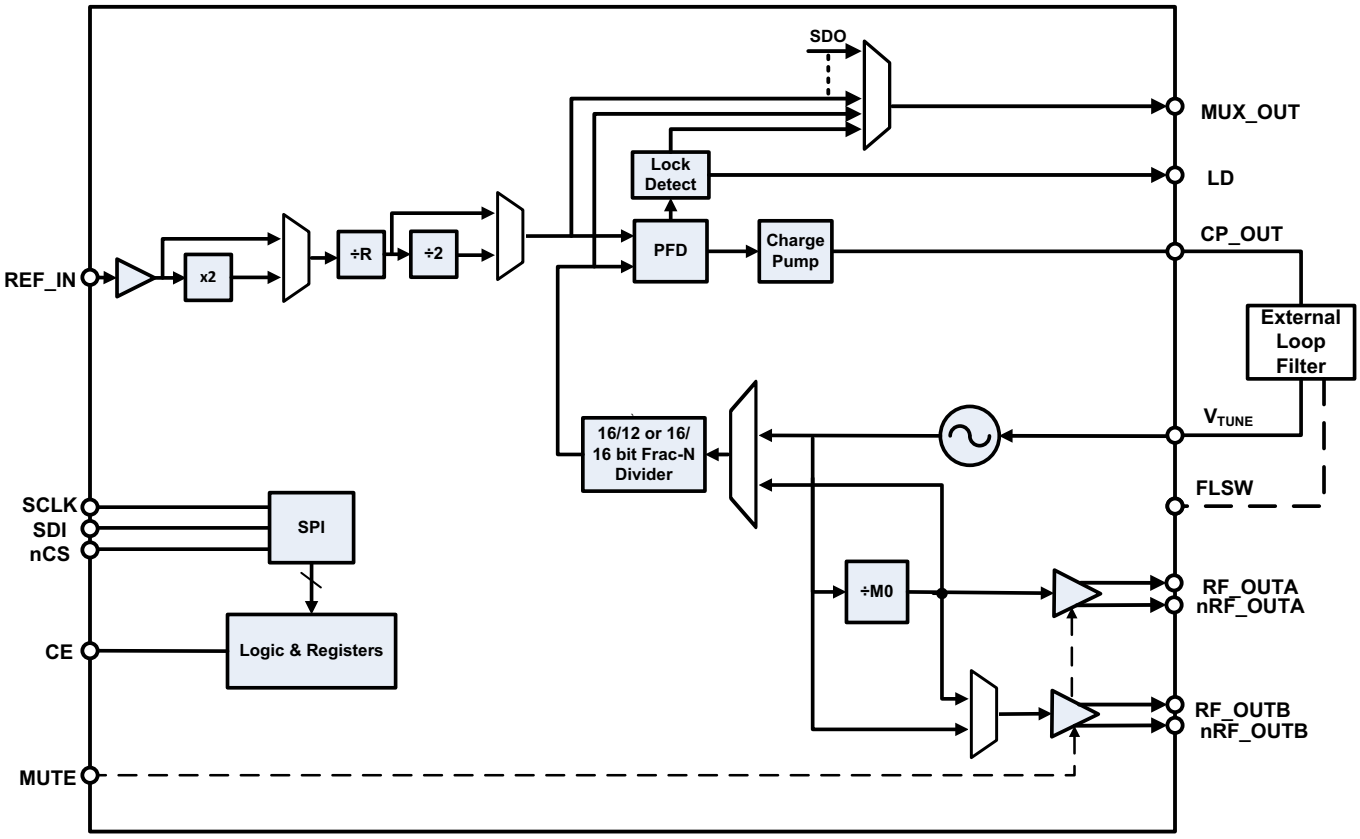

NOTE: 16-Bit Integer / 16-Bit Fractional feedback divider is available when using extended register.

Pin Assignment

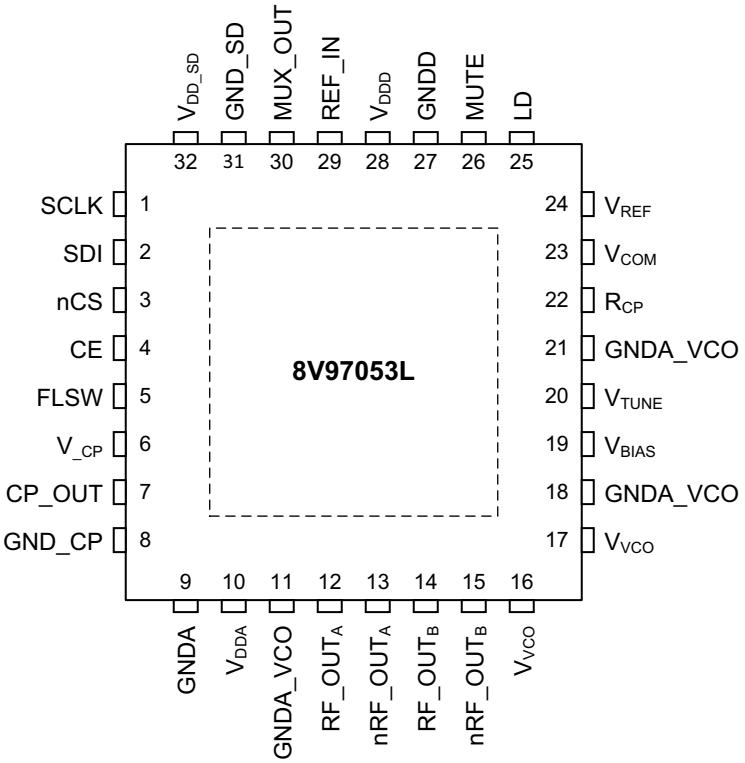

32-Lead 5mm x 5mm VFQFN

Pin Description and Characteristic Tables

Table 1. Pin Description[1]

Pin	Name	Type		Description
1	SCLK	LVCMOS Input	Pulldown	Serial Clock Input. High-Impedance CMOS input. 1.8V logic. 3.3V tolerant.
2	SDI	LVCMOS Input	Pullup	Serial Data Input. High-Impedance CMOS input. 1.8V logic. 3.3V tolerant.
3	nCS	LVCMOS Input	Pulldown	Load Enable. High-Impedance CMOS input. 1.8V logic. 3.3V tolerant. Active Low.
4	CE	LVCMOS Input	Pullup	Chip Enable. On logic Low, powers down the device and puts the charge pump into High-Impedance mode. Powers up the device on logic High.
5	FLSW	Analog		Fast Lock Switch. A connection should be made from the loop filter to this pin when using the fast lock mode.
6	$V_{_CP}$	Power		Charge Pump Power Supply. $V_{_CP}$ must have the same value as $V_{DDA.}$ Place decoupling capacitors to the ground plane as close to this pin as possible.
7	CP_OUT	Analog		Charge Pump Output. When enabled, this output provides ±ICP to the external loop filter. The output of the loop filter is connected to V_{TUNE} to drive the internal VCO.
8	GND_CP	Ground		Charge Pump Power Supply Ground.
9	GNDA	Ground		Analog Power Supply Ground.
10	V_{DDA}	Power		Analog Supply. This pin ranges from 3.3V ± 5%. V_{DDA} must have the same value as $V_{DDD.}$
11	GNDA_VCO	Ground		VCO Analog Power Supply Ground.
12	RF_OUT_A	Output		Clock Output pair A. The output level is programmable.
13	nRF_OUT_A	Output		Clock Output pair A. The output level is programmable.
14	RF_OUT_B	Output		Clock Output pair B. The output level is programmable.
15	nRF_OUT_B	Output		Clock Output pair B. The output level is programmable.
16	V_{VCO}	Power		VCO Supply. This pin ranges from 3.3V ± 5%. V_{VCO} must have the same value as $V_{DDA.}$
17	V_{VCO}	Power		VCO Supply. This pin ranges from 3.3V ± 5%. V_{VCO} must have the same value as $V_{DDA.}$
18	GNDA_VCO	Ground		VCO Analog Power Supply Ground.
19	V_{BIAS}	Analog		Place decoupling capacitors (10µF) to ground, as close to this pin as possible.
20	V_{TUNE}			Control Input to tune the VCO.
21	GNDA_VCO	Ground		VCO Analog Power Supply Ground.
22	R_{CP}	Analog		Sets the charge pump current. Requires external resistor.
23	V_{COM}	Analog		Place decoupling capacitors (1µF – 10µF) to ground, as close to this pin as possible.
24	V_{REF}	Analog		Place decoupling capacitors (10µF) to ground, as close to this pin as possible.
25	LD	LVCMOS Output		Lock Detect. Logic High indicates PLL lock. Logic Low indicates loss of PLL lock.
26	MUTE	LVCMOS Input	Pullup	RF_OUT_A and RF_OUT_B Power-Down. A logic low on this pin mutes the RF_OUT outputs and puts them in High-Impedance.
27	GNDD	Ground		Digital Power Supply Ground.

Table 1. Pin Description[1] (Continued)

28	V_{DDD}	Power		Digital Supply. V_{DDD} must have the same value as $V_{DDA.}$
29	REF_IN	LVCMOS Input	Analog	Reference Input. This CMOS input has a nominal threshold of V_{DDA}/2 and a DC equivalent input resistance of 100kΩ. This input can be driven from a TTL or CMOS crystal oscillator, or it can be AC-coupled.
30	MUX_OUT	LVCMOS Output		Multiplexed Output and Serial Data Out. Refer to Table 4C, Page 18.
31	GND_SD	Ground		Digital Sigma Delta Modulator Power Supply Ground.
32	V_{DD_SD}	Power		Digital Sigma Delta Modulator Supply. V_{DD_SD} must have the same value as $V_{DDA.}$
EP	Exposed Pad	Ground		Must be connected to GND.

NOTE 1. *Pullup* and *Pulldown* refer to internal input resistors. See Table 2, *Pin Characteristics,* for typical values.

Table 2. Pin Characteristics

Symbol	Parameter	Test Conditions	Minimum	Typical	Maximum	Units
C_{in}	Input Capacitance			4		pF
R_{OUT}	LVCMOS Output Impedance	MUX_OUT & LD		38		Ω
R_{PULLUP}	Input Pullup Resistor			51		kΩ
$R_{PULLDOWN}$	Input Pulldown Resistor			51		kΩ

Table 3. Supply Pins and Associated Current Return Paths

Power Supply Pin Number	Power Supply Pin Name	Associated Ground Pin Number	Associated Ground Pin Name
10	V_{DDA}	9	GNDA
28	V_{DDD}	27	GNDD
32	V_{DD_SD}	31	GND_SD
16, 17	V_{VCO}	11, 18, 21	GNDA_VCO
6	$V_{_CP}$	8	GND_CP

Principles of Operation

Synthesizer Programming

The Fractional-N architecture is implemented via a cascaded programmable dual modulus prescaler. The N divider offers a division ratio in the feedback path of the PLL, and is given by programming the value of INT, FRAC and MOD in the following equation:

$$N = INT + FRAC/MOD \qquad (1)$$

INT is the divide ratio of the binary 16-bits counter (refer to Table 5B, Page 22).

FRAC is the numerator value of the fractional divide ratio. It is programmable from 0 to (MOD – 1). Refer to Table 5C when in 12-bit mode, or Table 12K when in 16-bit mode.

MOD is the 12-bit or 16-bit modulus. It is programmable from 2 to 4095 in 12-bit mode, and 2 to 65535 in 16-bit mode. Refer to Table 6D when in 12-bit mode, or Table 12J when in 16-bit mode.

The **VCO** frequency (f_{VCO}) at RF_OUT_A or RF_OUT_B is given by the following equation:

$$f_{VCO} = f_{PFD} \times (INT + FRAC/MOD) \qquad (2)$$

f_{PFD} is the frequency at the input of the Phase and Frequency Detector (PFD).

The 8V97053L offers an Integer mode. To enable that mode, the user has to program the FRAC value to 0.

The device's VCO features three VCO band-splits to cover the entire range with sufficient margin for process, voltage, and temperature variations. These are automatically selected by invoking the Autocal feature. The charge pump current is also programmable via the ICP SETTING register for maximum flexibility.

Via Register 4, one can enable RF_OUT_A or both outputs. Similarly, one can disable RF_OUT_B or both outputs.

Reference Input Stage

The 8V97053L features one single-ended reference clock input (REF_IN). This single-ended input can be driven by an ac-coupled sine wave or square wave.

In Power Down mode this input is set to High-Impedance to prevent loading of the reference source.The reference input signal path also includes an optional doubler.

Reference Doubler

To improve the phase noise performance of the device, the reference doubler can be used. By using the doubler, the PFD frequency is also doubled and the phase noise performance typically improves by 3dB. When operating the device in Fractional mode, the speed of the Sigma Delta modulator of the N counter is limited to 125MHz, which is also the maximum PFD frequency that can be used in the fractional mode. When the part operates in Integer-N mode, the PFD frequency is limited to 310MHz.

The user has the possibility to select a higher PFD frequency (up to 310MHz in Integer mode) by doing the following steps using the extended registers (Register 6 and 7):

1. The user needs to increase the size of the Band Select Clock Divider (normally 8-bits) by setting the bit [D6:D3] in the Register 6 to divide down to a frequency lower than 500kHz and higher than 125kHz.
2. Use the Bit[D27:D26] to increase the lock detect precision for the faster PFD frequency.

The Lock Detect window should be set as large as possible but less than a period of the phase detector. The phase detector frequency should be greater than 500kHz.

Table 4A. Lock Detect Precision (LDP)

LDP_Ext2 (D27 of Register 6)	LDP_Ext1 (D26 of Register 6)	LDP (D7 of Register 2)	LDP value (ns)
0	0	0	10
0	0	1	6
Use of Extended Register 6			
0	1	0	3
0	1	1	3
1	0	0	4
1	0	1	4.5
1	1	0	1.5
1	1	1	1.5

Feedback Divider

The feedback divider N supports fractional division capability in the PLL feedback path. It consists in an integer N divider of 16-bits, and a Fractional divider of 12-bits (FRAC) over 12-bits (MOD). FRAC and MOD can be extended to 16-bits when using extended registers.

To select an integer mode only, the user sets FRAC to 0.

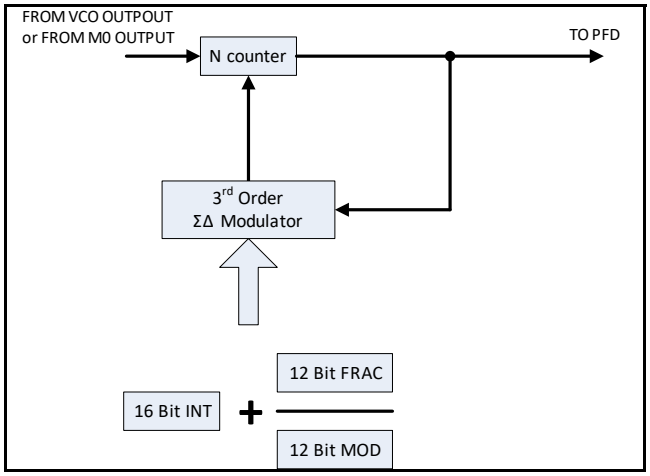

Figure 1. RF Feedback N Divider

The 16 INT bits (Bit[D30:D15] in Register 0) set the integer part of the feedback division ratio.

The 12 FRAC bits (Bit[D14:D3] in Register 0) set the numerator of the fraction that goes into the Sigma Delta modulator. FRAC can be extended to 16-bits using the EXT_FRAC bits in Register 7.

The 12 MOD bits (Bit[D14:D3] in Register 1) set the denominator of the fraction that goes into the Sigma Delta modulator. MOD can be extended to 16-bits using the EXT_MOD bits in Register 7.

From the relation (2), the VCO minimum step frequency is determined by (1/MOD) * f_{PFD}.

FRAC values from 0 to (MOD – 1) cover channels over a frequency range equal to the PFD reference frequency.

The PFD frequency is calculated as follows:

$$f_{PFD} = REF_{CLK} \frac{1+D}{R} \qquad (3)$$

Use 2R instead of R if the Reference Divide by 2 is used.

REF_{CLK} = the input reference frequency (REF_IN)

D = the input reference doubler (0 if not active or 1 if active)

R = the 10-Bits programmable input reference pre-divider

The programmable modulus (MOD) is determined based on the input reference frequency (REF_IN) and the desired channelization (or output frequency resolution). The high resolution provided on the R counter and the Modulus allows the user to choose from several configuration (by using the doubler or not) of the PLL to achieve the same channelization. Using the doubler may offer better phase noise performance. The high resolution Modulus also allows to use the same input reference frequency to achieve different channelization requirements. Using a unique PFD frequency for several needed channelization requirements allows the user to design a loop filter for the different needed setups and ensure the stability of the loop.

The channelization is given by $\frac{f_{PFD}}{MOD}$ (4)

In low noise mode (dither disabled), the Sigma Delta modulator can generate some fractional spurs that are due to the quantization noise.

The spurs are located at regular intervals equal to f_{PFD}/L where L is the repeat length of the code sequence in the Sigma Delta modulator. That repeat length depends on the MOD value, as described in Table 4B.

Table 4B. Fractional Spurs Due to the Quantization Noise

Condition (Dither Disabled)	L	Spur intervals
MOD can be divided by 2, but not by 3	2 x MOD	f_{PFD}/(2*MOD)
MOD can be divided by 3, but not by 2	3 x MOD	f_{PFD}/(3*MOD)
MOD can be divided by 6	6 x MOD	f_{PFD}/(6*MOD)
Other conditions	MOD	f_{PFD}/MOD (channel step)

In order to reduce the spurs, the user can enable the dither function to increase the repeat length of the code sequence in the Sigma Delta modulator. The increased repeat length is 2^{21} cycles so that the resulting quantization error is spread to appear like broadband noise. As a result, the in-band phase noise may be degraded when using the dither function.

When the application requires the lowest possible phase noise and when the loop bandwidth is low enough to filter most of the undesirable spurs, or if the spurs won't affect the system performance, it is recommended to use the low noise mode with dither disabled.

Phase and Frequency Detector (PFD) and Charge Pump

The phase detector compares the outputs from the R counter and from the N counter and generates an output corresponding to the phase and frequency difference between the two inputs the PFD. The charge pump current is programmable through the serial port (SPI) to several different levels.

The PFD offers an anti-backlash function that helps to avoid any dead zone in the PFD transfer function.

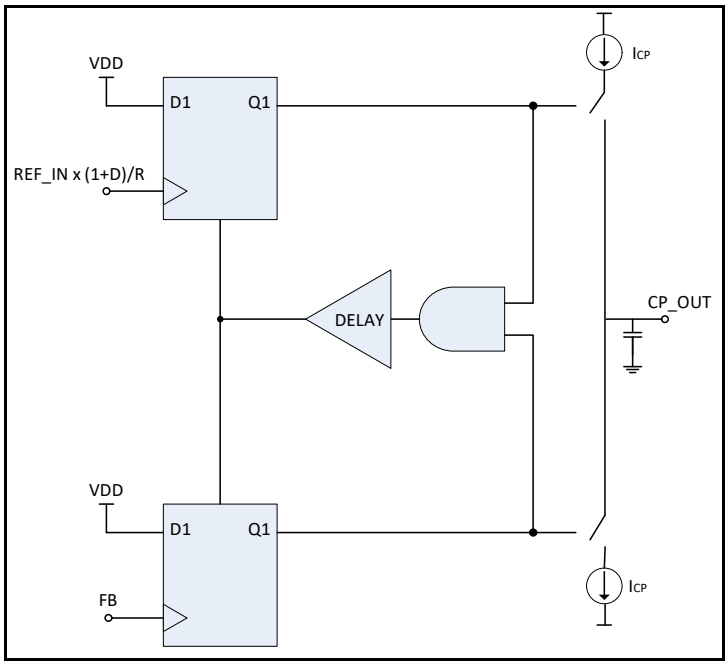

Figure 2. Simplified PFD Circuit using D-type Flip-flop

The Band Select logic operates between 125kHz and 500kHz. The Band Select clock divider needs to be set to divide down the PFD frequency to between 125kHz to 500kHz (logic maximum frequency).

PFD Frequency

The VCO Band Selection can be used while operating at PFD frequencies up to 310MHz.

If the application requires the PFD frequency to be higher than 125MHz, the user can use one of the following two techniques (Technique A is the recommended procedure):

A.The user can use the extended register ExtBndSelDiv[4:1] bits (Bits[D6:D3]) in Register 6. These additional band select divider bits extend the band select divider from 8-bits (available in Register 4) to 12-bits. The four additional band select divider bits in Register 4 are the most significant bits of the divide value. For proper VCO band selection, the PFD frequency divided by the band select divide value must be ≤500kHz and ≥125kHz.

B.If choosing this second technique, the user must follow the three following steps:

1. Disable the Phase Adjust function by setting the bit D28 In Register 1 to 0, keep the PFD frequency lower than 125MHz, and program the desired VCO frequency.
2. Enable the phase adjust function by setting BAND_SEL_DISABLE (Bit D28 in Register 1) to 1.
3. Set the desired PFD frequency and program the relevant R divider and N counter values.

In either technique, the Lock Detect Precision should be programmed to be lower than the PFD period using the bit [D7] in Register 2 and the bits [D27:D26] in Register 6 (Refer to Table 4A, Page 10).

External Loop Filter

The 8V97053L requires an external loop filter. The design of that filter is application specific. For additional information, refer to the Applications Information section.

Phase Detector Polarity

The phase detector polarity is set by bit D6 in Register 2. This bit should be set to 1 when using a passive loop filter or a non-inverting active loop filter. If an inverting active filter is used, this bit should be set to 0.

Charge Pump High-Impedance

In order to put the charge pump into three-state mode, the user must set the bit D4 [CP HIGHZ] in Register 2 to 1. This bit should be set to 0 for normal operation.

Integrated Low Noise VCO

The VCO function of the 8V97053L consists in three separate VCOs. This allows keeping narrow tuning ranges for the VCOs while offering a large frequency tuning range for VCO core. Keeping narrow VCO tuning ranges allows for lower VCO sensitivity (K_{VCO}), which results in the best possible VCO phase noise and spurious performance.

The user does not have to select the different VCO bands. The VCO band select logic of the 8V97053L will automatically select the most suitable band of operation at power up or when Register 0 is written.

For optimal performance, it is recommended to recalibrate the VCO by re-writing Register 0 when the temperature has varied more than 90°C from the temperature at which the previous calibration occurred.

Output Distribution Section

The 8V97053L device provides two outputs. These two outputs can generate the same frequency (f_{VCO} / M0) or two integer related different frequencies (in this case, RF_OUT_B would generate a frequency equal to the VCO frequency and RF_OUT_A would generate f_{VCO} / M0).

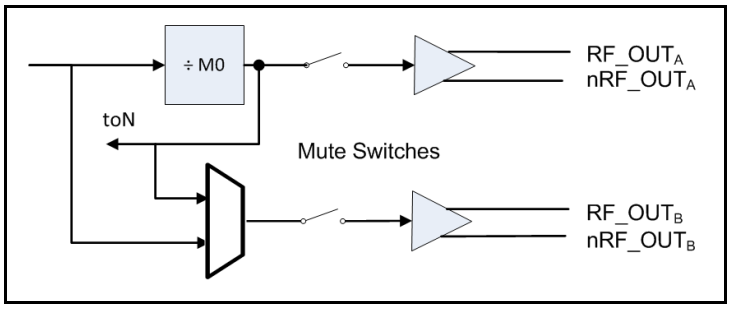

Figure 3. Output Clock Distribution

RF_OUT and nRF_OUT are derived from the drain of an NMOS differential pair driven by the VCO output (or by the M0 Divider), as shown in Figure 4, *Output Stage*.

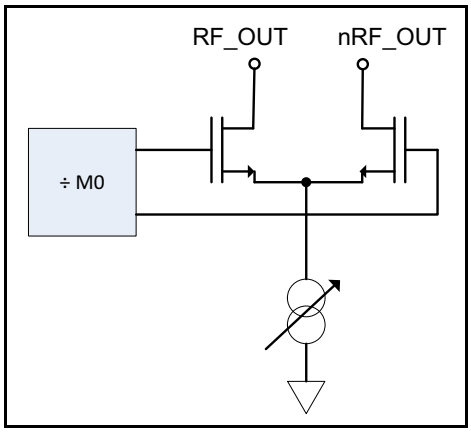

Figure 4. Output Stage

Eight programmable output power levels can be programmed from -4dBm to +7dBm (see RF Output Power section).

The 8V97053L offers an auxiliary output (RF_OUT_B). If the auxiliary output stage is not used, it can be powered down by using the RF_OutB_En bit in Register 4.

The supply current to the output stage can be shut down until the part achieves lock. To enable this mode, the user will set the MTLD bit in Register 4. The MUTE pin can be used to mute all outputs and be used as a similar function.

Output Matching

The outputs of the 8V97053L are Open Drain Output and can be matched in different ways.

A simple broadband matching is to terminate the open drain RF_OUT output with, for example, a 50Ω to V_{DDA}, and with an AC coupling capacitor in series. An example of this termination scheme is shown on Figure 5, *Broadband Matching Termination*.

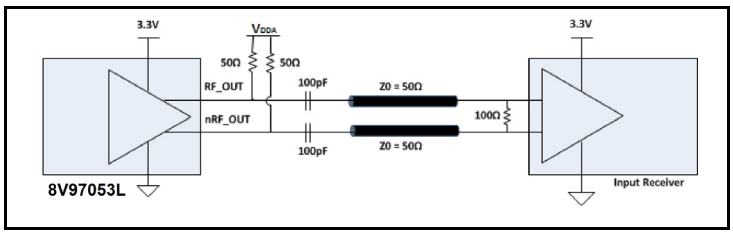

Figure 5. Broadband Matching Termination

This termination scheme allows to provide one of the selected output power on the differential pair when connected to a 50Ω load. (See the RF Output Power section for more information about the output power selection).

The 50Ω resistor connected to V_{DDA} can also be replaced by a choke, for better performance and optimal power transmission.

The pull up inductor value is frequency dependent. For impedance of 50Ω pull-up, the inductance value can be calculated as L = 50/(2*3.14*F), where F is operating frequency. In this example, L = 3.9nH is for an operating frequency of approximately 2GHz.

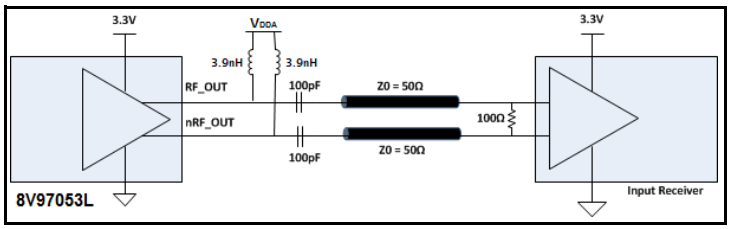

Figure 6. Optimal Matching Termination

See Applications Information section for more recommendations on the termination scheme.

Band Selection Disable

For a given frequency, the output phase can be adjusted when using the Band_Sel_Disable bit (Bit D28 in Register 1). When this bit is enabled (Bit D28 set to 1), the part does not do a VCO band selection or phase resync after an update to Register 0.

When the Band_Sel_Disable bit is set to 0, and when Register 0 is updated, the part proceeds to a VCO band selection, and to a phase resync if phase_resync is also enabled in Register 3 (Bits[D16:D15] set to D16 = 1 and D15 = 0).

The “Band_Sel_Disable” bit is useful when the user wants to make small changes in the output frequency (<1MHz from the nominal frequency) without recalibrating the VCO and minimizing the settling time.

Phase Adjust

The output phase is controlled by the 12-Bit phase value Bits[D26:D15] in Register 1. The output phase can vary over 360° with a 360°/MOD step. For dynamic adjustments of the phase after an initial phase setting, it is recommended to select the BAND_SEL_DISABLE function by setting the Band_Sel_Disable bit (D28 in Register 1) to 1.

The PHASE value can be extended to 16-bits when using the extended registers. In this 16 bit mode, both registers 1 and 7 define the PHASE value.

Phase Resync

The phase alignment function operates based on adjusting the “fractional” phase, so the phase can settle to any one of the MOD phase offsets, MOD being the modulus of the fractional feedback divider.

The phase adjustment can provide a 0-360° of phase adjust, assuming that the output divider ratio is set to 1.

The phase step is TVCO/MOD for the normal case of fundamental feedback. TVCO is the period of the VCO.

The feedback select bit (FbkSel bit, Bit D23 in Register 4) gives the choices of fundamental feedback or divided feedback. This bit controls the mux that sends the VCO signal or the output divider signal to the feedback loop. The user can get larger phase steps in the divided mode, but the phase noise may be degraded, especially in fractional mode. Should the user select this option, the phase adjustment step would be ~T_{OUT}/MOD, where T_{OUT} is the output signal period.

When the part is in fractional mode, the device is dithering the feedback divider value. As an example, when using a 4GHz VCO frequency, the feedback divider value may dither between Div-by-20 and Div-by-21. Since the period is 250ps, there will be 250ps of jitter added to the phase detector. This jitter is filtered by the loop, but can still show up at the output if the loop bandwidth is high. When using a divider before the feedback divider, the effective VCO period is increased. If a Div-by-64 is used for example, the period becomes 64x250ps = 16ns. This means that there could be an additional 16ns of jitter at the PFD, rather than 250ps. It is more challenging for the loop to filter this larger amount of jitter and this will degrade the overall performance of the part, unless the user chooses to use a very low loop bandwidth. With normal loop bandwidth configurations (for optimal noise), the phase noise would be degraded when using a divided feedback mode.

The Phase Resync is controlled by setting Bits[D16:D15] in Register 3 to D16 = 1 and D15 = 0. When phase resync is used, an internal timer generates sync signals every T_{SYNC} where:

$$T_{SYNC} = ClkDiv \times MOD \times T_{PFD} \qquad (5)$$

ClkDiv = the value (from 1 and 4095) programmed in the 12-bit clock counter in Bits[D14:D3] in Register 3. The 12-bit counter is used as a timer for Fast Lock and for the Phase Resync function.

MOD = the Modulus value (Bits[D14:D3] of Register 1)

T_{PFD} = the PFD period

In *Equation 5*, the minimum of either MOD value or 4095 is used for calculating T_{SYNC} when in 16-bit mode.

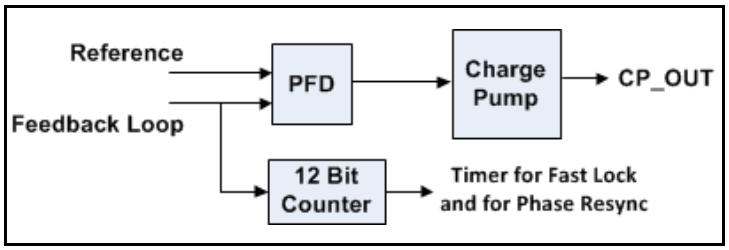

Figure 7. 12-bit Counter for Fast Lock and Phase Resync

After the user program a frequency, the second sync pulse coming from the 12-bit counter, after the nCS is asserted high, is used to resynchronize the output phase to the input phase. To ensure that the PLL is locked before to resynchronize the output phase, TSYNC must be larger than the worst case lock time.

Fast Lock Function

The device uses a fast-lock mode to decrease lock time.

In order to allow the Fast Lock mode, the Fast Lock Switch (FLSW) is shorted to Ground and the charge pump current (ICP) is changed temporarily until the Fast Lock mode is disabled.

The loop bandwidth needs to be increased temporarily in order to allow a faster lock time. By doing this, the loop filter needs to be initially designed so that it addresses the risk of instability of having the zero and the poles too close to the actual bandwidth knee, when the user switches to a fast lock mode.

The loop bandwidth is proportional to:

RS and ICP (BW ~ RS * ICP)

Where:

BW = the loop bandwidth
RS = the damping resistor
ICP = the programmable charge pump current

In order to enable the fast lock mode, the charge pump current is increased to the maximum value in order to increase the loop bandwidth. In parallel, the FLSW filter is set to ON so that the RS value is ¼ of its initial value in order to maintain the loop stability. By doing so, the zero and the first pole are moved (by a factor of 4x in the example below), so that the zero and the pole are kept at a suitable distance around the loop bandwidth.

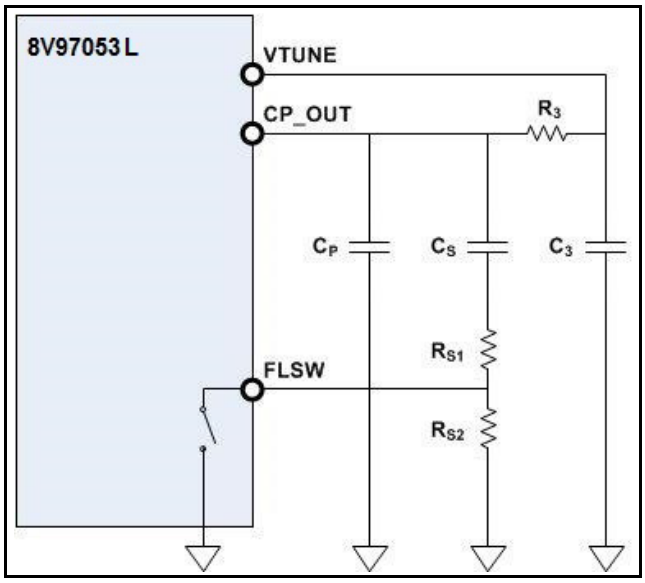

Figure 8. Example of Fast Lock Mode Loop Filter Topology

In the example of Figure 8, *Example of Fast Lock Mode Loop Filter Topology*, the damping resistor RS is equal to:
RS1 + RS2 in normal mode (FSLW switch OFF), with RS2 = 3 * RS1

When the FLSW switch is ON, the damping resistor value is reduced by ¼ of its initial value (RS = RS1).

The second pole defined by R3 and C3 need needs to be designed so that there is no risk of instability when widening the loop bandwidth.

RF Output Power

For RF_OUT_A and RF_OUT_B, the output power can be programmed from -4dBm to +7dBm.

Refer to Table 9I, Table 9J, Table 11E and Table 11F in the Register Map section for more information.

MUX_OUT

MUX_OUT is a multipurpose output that can be programmed to provide the user with some internal status and values for test and debugging purpose. In addition, MUX_OUT can also be programmed to provide an additional Serial Data Out Pin for a 4-wire SPI interface when needed. The MUX_OUT function is described in the Table 4C and can be programmed in Bits[D28:D26] in Register 2.

Table 4C. MUX_OUT Pin Configuration

MUX_OUT Register Value	MUX_OUT Function
000	High-Impedance Output
001	V_{DDD}
010	GNDD
011	R Counter Output
100	N counter Output
101	Reserved
110	Lock Detect
111	MUX_OUT configured as SDO

Power-Down Mode

When power-down is activated, the following events occur:

1. Counters are forced to their load state conditions
2. VCO is powered down
3. Charge pump is forced into three-state mode
4. Digital lock detect circuitry is reset
5. RF_OUT buffers are disabled
6. The input stage is powered down and set to High-Impedance
7. Input registers remain active and capable of loading and latching data

Default Power-Up Conditions

All the RF outputs are muted at power up until the loop is locked. Refer to the Register Map section for default values in registers.

Program Modes

Table 4D and the Register Map indicate how the program modes are set up in the 8V97053L.

Table 4D. Control Bits Configuration

Control Bits (CB)			Register
C3	C2	C1	
0	0	0	Register 0
0	0	1	Register 1
0	1	0	Register 2
0	1	1	Register 3
1	0	0	Register 4
1	0	1	Register 5
1	1	0	Extended Register 6
1	1	1	Extended Register 7

Double Buffering

The following bits are Doubled Buffered:

1. **PHASE** (Bits[D26:D15] in Register 1)
2. **MOD** (Bits[D14:D3] in Register 1)
3. **REF DOUBLER** (Bit D25 in Register 2)
4. **REF DIV2** (Bit D24 in Register 2)
5. **R COUNTER** (Bits[D23:D14] in Register 2)
6. **ICP SETTING** (Bits[D12:D9] in Register 2)

The user must proceed to the following steps before any value written in these bits are used.

1. The new values are written in the double buffered bits
2. A new Write is performed on Register 0

The RF DIVIDER value in Register 4 (Bits[D22:D20]) is also double buffered, but only if the DOUBLE BUFFER bit (Bit D13 in Register 2) is set to 1.

Timing Characteristics

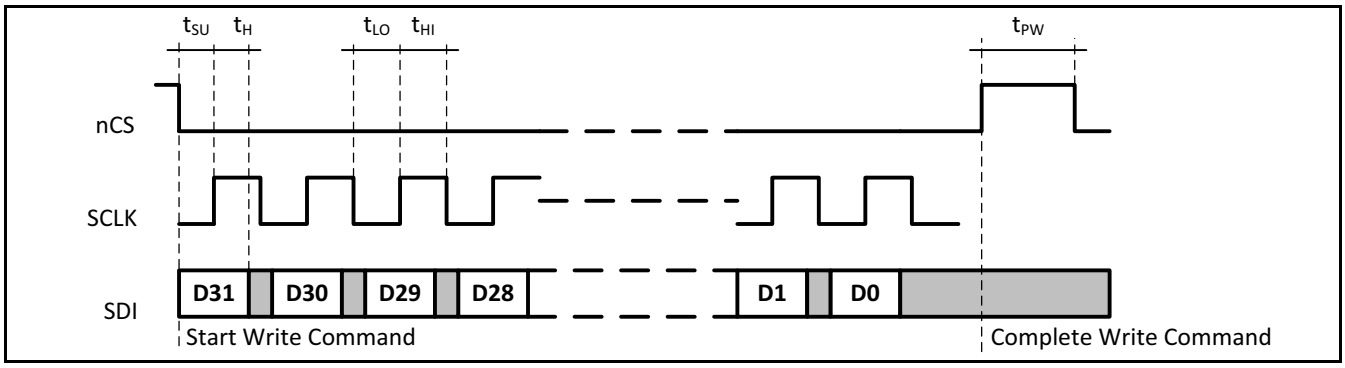

Figure 9. SPI Write Cycle Timing Diagram

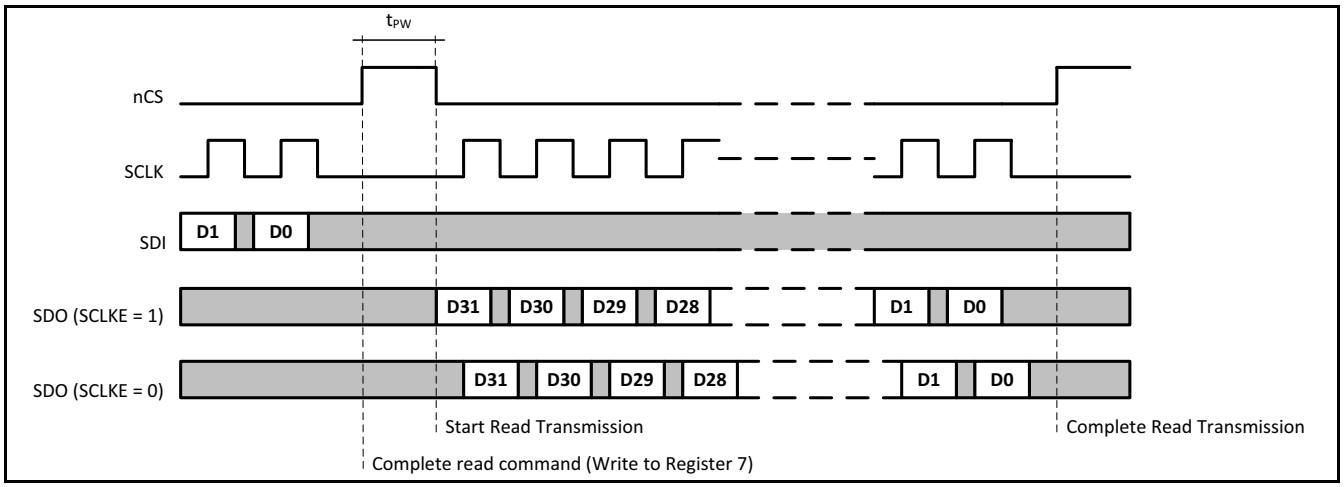

Figure 10. SPI Read Cycle Timing Diagram

Table 4E. SPI Read / Write Cycle Timing Parameters

Symbol	Parameter	Minimum	Maximum	Unit
f_{CLK}	SCLK Frequency	-	20	MHz
t_{SU}	nCS, SDI Setup Time to SCLK	10	-	ns
t_H	SCLK to nCS, SDI Hold Time	10	-	ns
t_{LO}	SCLK Low Pulse Width	25	-	ns
t_{HI}	SCLK High Pulse Width	25	-	ns
t_{PW}	nCS De-asserted Pulse Width	20	-	ns

3- or 4-Wire SPI Interface Description

The 8V97053L has a serial control port capable of responding as a slave in an SPI compatible configuration to allow access to any of the internal registers (see section, "Register Map" on page 22) for device programming or examination of internal status. See the specific sections for each register for details on meanings and default conditions.

SPI mode slave operation requires that a device external to the 8V97053L has performed any necessary serial bus arbitration and/or address decoding at the level of the board or system. The 8V97053L begins a cycle by detecting an asserted (low) state on the nCS input at a rising edge of SCLK. This is also coincident with the first bit of data being shifted into the device. In SPI mode, the first bit is the Most Significant Bit (MSB) of the data word being written. Data must be written in 32-bit words, with nCS remaining asserted and one data bit being shifted in to the 8V97053L on every rising edge of SCLK. If nCS is de-asserted (high) at any time except after the complete 32nd SCLK cycle, this is treated as an error and the shift register contents are discarded. No data is written to any internal registers. If nCS is de-asserted (high) as expected at a time at least t_{SU} after the 32nd falling edge of SCLK, then this will result in the shift register contents being acted on according to the control bit in it.

It is recommended to write the registers in reverse sequential order, starting with the highest register number first and ending with Register 0.

The word format of the 32-bit quantity in the shift register is shown in Table 4F. The register fields in the 8V97053L have been organized so that the three LSBs in each 32-bit register row are not used for data transfer. These bits will represent the base address for the 32-bit register row.

To perform a register Read, the user needs set the MUX_OUT bits (Bits[28:D26]) in Register 2 to 111 to configure the MUX_OUT pin as SDO. Register 7 (Instruction register) needs to be set for Read operation. Bit D3 of Register 7 will set the Read or Write command, and Bits[D4:D6] determine the read back address.

If a read operation is requested, 32-bits of read data will be provided in the immediately subsequent access. nCS must be de-asserted (high) for at least $t_{PW,}$ and then reasserted (low).

If SCLKE = 1 (default condition), one data bit will be transmitted on the SDO output at the falling edge of nCS and each falling edge of SCLK as long as nCS remains asserted (low), and the master device should capture data on the rising edge of SCLK. If SCLKE = 0, one data bit will be transmitted on the SDO output at each rising edge of SCLK as long as nCS remains asserted (low), and the master device should capture data on the falling edge of SCLK.

If nCS is de-asserted (high) before 32-bits of read data have been shifted out, the read cycle will be considered to be completed. If nCS remains asserted (low) longer than 32-bit times, then the data during those extra clock periods will be undefined. The MSB of the data will be presented first.

Table 4F. SPI Mode Serial Word Structure

	MSB							**LSB**
Bit #	**31**	**…**	**5**	**4**	**3**	**2**	**1**	**0**
Meaning	D[31:3]						Control Bits	
Width	29						3	

Register Map

Register 0

Table 5A. Register 0 Bit Allocation

BITS	D31	D30	D29	D28	D27	D26	D25	D24	D23	D22	D21	D20	D19	D18	D17	D16	D15	D14	D13	D12	D11	D10	D9	D8	D7	D6	D5	D4	D3	D2	D1	D0
NAME	RESERVED	NDiv16	NDiv15	NDiv14	NDiv13	NDiv12	NDiv11	NDiv10	NDiv9	NDiv8	NDiv7	NDiv6	NDiv5	NDiv4	NDiv3	NDiv2	NDiv1	FDiv12	FDiv11	FDiv10	FDiv9	FDiv8	FDiv7	FDiv6	FDiv5	FDiv4	FDiv3	FDiv2	FDiv1	CB3	CB2	CB1
DESCRIPTION	RESERVED	FEEDBACK DIVIDER INTEGER VALUE (INT)																FEEDBACK DIVIDER FRACTIONAL VALUE (FRAC)												CONTROL BITS		

Table 5B. Register 0: 16-Bit Feedback Divider Integer Value (INT). Function Description

Name	Description	Factory Default	Function
NDiv[16:1]	Feedback Divider Integer Value (INT)	0000 0000 0110 0100 (INT = 100)	0000 0000 0000 0000 = Not allowed 0000 0000 0000 0001 = Not allowed ... 0000 0000 0000 0111 = Not allowed 0000 0000 0000 1000 = 8 … 0000 0000 0001 0111 = 23 0000 0000 0001 1000 = 24 … 1111 1111 1111 1111 = 65,535

Table 5C. Register 0: 12-Bit Feedback Divider Fractional Value (FRAC). Function Description[1]

Name	Description	Factory Default	Function
FDiv[12:1]	Feedback Divider Fractional Value (FRAC)	0000 0000 0000 (FRAC = 0)	0000 0000 0000 = 0 0000 0000 0001 = 1 … 1111 1111 1111 = 4095

NOTE 1. This table is used when bit 16b_12b_sel is set to 0 (default). If the 16b_12b_sel is set to 1, refer to Table 12K, Page 42.

Table 5D. Register 0: 3-Bit Control Bits. Function Description[1]

Name	Description	Function
CB[3:1]	Control Bits	000 = Register 0 is programmed

NOTE 1. The user has to set CB[3:1] to 000 in order to write to Register 0.

Register 1

Table 6A. Register 1 Bit Allocation

BITS	D31	D30	D29	D28	D27	D26	D25	D24	D23	D22	D21	D20	D19	D18	D17	D16	D15	D14	D13	D12	D11	D10	D9	D8	D7	D6	D5	D4	D3	D2	D1	D0
NAME	Reserved	Reserved	Reserved	Band_Sel_Disable	Unused	Phase12	Phase11	Phase10	Phase9	Phase8	Phase7	Phase6	Phase5	Phase4	Phase3	Phase2	Phase1	Mod12	Mod11	Mod10	Mod9	Mod8	Mod7	Mod6	Mod5	Mod4	Mod3	Mod2	Mod1	CB3	CB2	CB1
DESCRIPTION	RESERVED			BAND_SEL_DISABLE	UNUSED	PHASE VALUE (PHASE)												MODULUS VALUE (MOD)												CONTROL BITS		

Table 6B. Register 1: 1-Bit BAND_SEL_DISABLE. Function Description

Name	Description	Factory Default	Function
Band_Sel_Disable	BAND_SEL_DISABLE	0	0 = VCO Band Selection occurs after a Write to Register 0 1 = VCO Band selection is not active and hold to previous VCO band selection

Table 6C. Register 1: 12-Bit Phase Value (PHASE). Function Description

Name	Description	16b_12b_sel (Bit D20, Register7)	Factory Default	Function
Phase [12:1]	PHASE	0	0000 0000 0001	0000 0000 0000 = 0
				0000 0000 0001 = 1
				……
				1111 1111 1111 = 4095
		1	0000 0000 0001	0000 0000 0000 = 0
				0000 0000 0001 = 16
				……
				1111 1111 1111 = 65520

Table 6D. Register 1: 12-Bit Modulus Value (MOD). Function Description[1]

Name	Description	Factory Default	Function
Mod[12:1]	MOD	0000 0000 0010	0000 0000 0000 = Not Allowed 0000 0000 0001 = Not Allowed 0000 0000 0010 = 2 … 1111 1111 1111 = 4095

NOTE 1. This table is used when bit D20 in Register 7 (16b_12B_sel) is set to 0 (default). If 16b_12b_sel is set to 1, refer to Table 12J, Page 42.

Table 6E. Register 1: 3-Bit Control Bits. Function Description[1]

Name	Description	Function
CB[3:1]	Control Bits	001 = Register 1 is programmed

NOTE 1. The user has to set CB[3:1] to 001 in order to write to Register 1.

Register 2

Table 7A. Register 2 Bit Allocation

BITS	D31	D30	D29	D28	D27	D26	D25	D24	D23	D22	D21	D20	D19	D18	D17	D16	D15	D14	D13	D12	D11	D10	D9	D8	D7	D6	D5	D4	D3	D2	D1	D0
NAME	RESERVED	ModeNoise1	ModeNoise2	MUX_OUT3	MUX_OUT2	MUX_OUT1	RefDoub	RDiv2	R10	R9	R8	R7	R6	R5	R4	R3	R2	R1	DoubBuff1	ChrgPmp4	ChrgPmp3	ChrgPmp2	ChrgPmp1	LDF	LDP	PD_pol	PwrDwn	CP_HIGHZ	Unused	CB3	CB2	CB1
DESCRIPTION	RESERVED	NOISE MODE		MUX_OUT			REF DOUBLER	REF DIV2	R COUNTER										DOUBLE BUFFER	ICP SETTING				LDF	LDP	PD POLARITY	POWER DOWN	CP HIGHZ	UNUSED	CONTROL BITS		

Table 7B. Register 2: 2-Bit NOISE MODE. Function Description

Name	Description	Factory Default	Function
ModeNoise[2:1]	NOISE MODE	00	00 = Low Noise Mode (Dither OFF) 01 = Reserved 10 = Reserved 11 = Low Spur Mode (Dither Enabled)

Table 7C. Register 2: 3-Bit MUX_OUT. Function Description

Name	Description	Factory Default	Function
MUX_OUT[3:1]	MUX_OUT	000	000 = High-Impedance output 001 = V_{DDD} 010 = GNDD 011 = R counter output 100 = N counter output 101 = Reserved 110 = Lock Detect 111 = MUX_OUT configured as SDO

Table 7D. Register 2: 1-Bit REF DOUBLER. Function Description

Name	Description	Factory Default	Function
RefDoub	REF DOUBLER	0	0 = Disabled 1 = Enabled

Table 7E. Register 2: 1-Bit REF DIV2. Function Description

Name	Description	Factory Default	Function
RDIV2	REF DIV2	0	0 = Disabled 1 = Enabled

Table 7F. Register 2: 10-Bit R COUNTER (R). Function Description

Name	Description	Factory Default	Function
R[10:1]	R	00 0000 0001	00 0000 0000 = Not Allowed 00 0000 0001 = 1 00 0000 0010 = 2 … 11 1111 1111 = 1023

Table 7G. Register 2: 1-Bit DOUBLE BUFFER. Function Description[1]

Name	Description	Factory Default	Function
DoubBuff1	DOUBLE BUFFER	0	0 = Disabled 1 = Enabled

NOTE 1. Bit D13 enables or disables Double Buffering of Bits[D22:D20] in Register 4. Refer to Program Modes section.

Table 7H. Register 2: 4-Bit Charge Pump Setting (ICP SETTING). Function Description

Name	Description	Factory Default	Function
ChrgPmp[4:1]	ICP SETTING	0000	Icp (mA) assuming RCP = 5.1kΩ 0000 = 0.31 0001 = 0.63 0010 = 0.94 0011 = 1.25 0100 = 1.56 0101 = 1.88 0110 = 2.19 0111 = 2.50 1000 = 2.81 1001 = 3.13 1010 = 3.44 1011 = 3.75 1100 = 4.06 1101 = 4.38 1110 = 4.69 1111 = 5.00

Table 7I. Register 2: 1-Bit Lock Detect Function (LDF). Function Description[1]

Name	Description	Factory Default	Function
LDF	LDF	0	0 = 40 consecutive cycles (recommended for FRAC-N mode) 1 = 5 consecutive cycles (recommended for INT-N mode)

NOTE 1. LDF controls the number of PFD cycles that needs to be considered by the Lock Detect function to decide if the part has achieved lock.

Table 7J. Register 2: 1-Bit Lock Detect Precision. Function Description

Name	Description	Factory Default	Function
LDP	LDP	0	0 = 10ns 1 = 6ns

Table 7K. Register 2: 1-Bit Phase Detector Polarity. Function Description

Name	Description	Factory Default	Function
PD_Pol	PD POLARITY	1	0 = NEGATIVE 1 = POSITIVE

Table 7L. Register 2: 1-Bit Power Down. Function Description

Name	Description	Factory Default	Function
PwrDwn	POWER DOWN	0	0 = Disabled 1 = Enabled

Table 7M. Register 2: 1-Bit Charge Pump High-Impedance. Function Description

Name	Description	Factory Default	Function
CP_HIGHZ	CP HIGHZ	0	0 = Disabled 1 = Enabled

Table 7N. Register 2: 3-Bit Control Bits. Function Description[1]

Name	Description	Function
CB[3:1]	Control Bits	010 = Register 2 is programmed

NOTE 1. The user has to set CB[3:1] to 010 in order to write to Register 2.

Register 3

Table 8A. Register 3 Bit Allocation

BITS	D31	D30	D29	D28	D27	D26	D25	D24	D23	D22	D21	D20	D19	D18	D17	D16	D15	D14	D13	D12	D11	D10	D9	D8	D7	D6	D5	D4	D3	D2	D1	D0
NAME	RESERVED	RESERVED	RESERVED	RESERVED	RESERVED	RESERVED	RESERVED	RESERVED	BandSelCM	Unused	Unused	RESERVED	RESERVED	Unused	RESERVED	ClkDivMode2	ClkDivMode1	ClkDiv12	ClkDiv11	ClkDiv10	ClkDiv9	ClkDiv8	ClkDiv7	ClkDiv6	ClkDiv5	ClkDiv4	ClkDiv3	ClkDiv2	ClkDiv1	CB3	CB2	CB1
DESCRIPTION	RESERVED								BAND SELECT	UNUSED	UNUSED	RESERVED		UNUSED	RESERVED	CLK DIV MODE		CLOCK COUNTER VALUE												CONTROL BITS		

Table 8B. Register 3: 1-Bit Band Select Clock Mode. Function Description[1]

Name	Description	Factory Default	Function
BandSelCM	BAND SELECT (CLOCK RATE)	0	0 = LOW (125kHz) 1 = HIGH (up to 500kHz logic sequence for Faster Lock applications)

NOTE 1. BAND SELECT (CLOCK RATE) selects the speed of the logic sequence for the band selection. BandSelCM = 1 sets the logic sequence rate faster, which is recommended for fast lock operation and when high PFD frequencies are used. BandSelCM = 0 is recommended when low PFD frequencies (125kHz) are used. When using BandSelCM = 1, the value of the BAND SELECT CLOCK COUNTER (BndSelDiv[8:1]) must be less than or equal to 254.

Table 8C. Register 3: 2-Bit Clock Divider Mode. Function Description

Name	Description	Factory Default	Function
ClkDivMode[2:1]	CLK DIV MODE	00	00 = Clock Divider OFF 01 = Fast Lock Enabled 10 = Resync Enabled 11 = Reserved

Table 8D. Register 3: 12-Bit Clock Divider Value (CLKDIV). Function Description

Name	Description	Factory Default	Function
ClkDiv[12:1]	CLKDIV	0000 0000 0001	0000 0000 0000 = Not allowed 0000 0000 0001 = 1 0000 0000 0010 = 2 … 1111 1111 1111 = 4095

Table 8E. Register 3: 3-Bit Control Bits. Function Description[1]

Name	Description	Function
CB[3:1]	CONTROL BITS	011 = Register 3 is programmed

NOTE 1. The user has to set CB[3:1] to 011 in order to write to Register 3.

Register 4

Table 9A. Register 4 Bit Allocation

BITS	NAME	DESCRIPTION
D31	RESERVED	RESERVED
D30	RESERVED	
D29	RESERVED	
D28	RESERVED	
D27	RESERVED	
D26	RESERVED	
D25	RESERVED	
D24	RESERVED	
D23	FbkSel	FEEDBACK SELECT
D22	RFDiv3	RF DIVIDER
D21	RFDiv2	
D20	RFDiv1	
D19	BndSelDiv8	BAND SELECT CLOCK COUNTER
D18	BndSelDiv7	
D17	BndSelDiv6	
D16	BndSelDiv5	
D15	BndSelDiv4	
D14	BndSelDiv3	
D13	BndSelDiv2	
D12	BndSelDiv1	
D11	VCOPwrDwn	VCO POWER DOWN
D10	MTLD	MTLD
D9	RF_OUTB_Sel	RF_OUTB SELECT
D8	RF_OUTB_En	RF_OUTB ENABLE
D7	RF_OUTB_Pwr	RF_OUTB OUTPUT POWER
D6	RF_OUTB_Pwr	
D5	RF_OutA_En	RF_OUTA ENABLE
D4	RF_OUTA_Pwr	RF_OUTA OUTPUT POWER
D3	RF_OUTA_Pwr	
D2	CB3	CONTROL BITS
D1	CB2	
D0	CB1	

Table 9B. Register 4: 1-Bit Feedback Select. Function Description

Name	Description	Factory Default	Function
FbkSel	FEEDBACK SELECT	1	0 = Divided 1 = Fundamental

Table 9C. Register 4: 3-Bit RF Output Divider (÷ MO) Select. Function Description

Name	Description	Factory Default	Function
RFDiv[3:1]	RF OUTPUT DIVIDER	000	000 = Div by 1 001 = Div by 2 010 = Div by 4 011 = Div by 8 100 = Div by 16 101 = Div by 32 110 = Div by 64 111 = Reserved

Table 9D. Register 4: 8-Bit Band Select Clock Counter. Function Description[1]

Name	Description	Factory Default	Function
BndSelDiv[8:1]	BAND SELECT CLOCK COUNTER	0000 0001	0000 0000 = Not Allowed 0000 0001 = 1 0000 0010 = 2 ... 1111 1111 = 255

NOTE 1. BAND SELECT CLOCK COUNTER sets the value of the divider for the band select logic clock input. By default, the output frequency of the R counter is used to clock the band select logic. If this frequency is larger than 125kHz, the Band Select Clock counter can be used to divide the R counter output to a smaller frequency suitable for the band selection logic.

Table 9E. Register 4: 1-Bit VCO Power Down. Function Description

Name	Description	Factory Default	Function
VCOPwrDwn	VCO POWER DOWN	0	0 = VCO Powered Up 1 = VCO Powered Down

Table 9F. Register 4: 1-Bit Mute Till Lock Detect. Function Description

Name	Description	Factory Default	Function
MTLD	MTLD	0	0 = Mute Disabled 1 = Mute Enabled

Table 9G. Register 4: 1-Bit RF_OUTB Select. Function Description

Name	Description	Factory Default	Function
RF_OUTB_Sel	RF_OUTB SELECT	0	0 = Divided Output 1 = Fundamental

Table 9H. Register 4: 1-Bit RF_OUTB Enable. Function Description

Name	Description	Factory Default	Function
RF_OUTB_En	RF_OUTB ENABLE	0	0 = Disabled (High-Impedance) 1 = Enabled[1]

NOTE 1. RF_OUT_A must also be enabled.

Table 9I. Register 4: 1-Bit RF_OUTA Enable. Function Description

Name	Description	Factory Default	Function
RF_OUTA_En	RF_OUTA ENABLE	0	0 = Disabled[1] (High-Impedance) 1 = Enabled

NOTE 1. RF_OUT_B will also disable.

Table 9J. Register 4: 2-Bit RF_OUTA Output Power. Function Description[1]

Name	Description	Factory Default	Function
RF_OUTA_Pwr[2:1]	RF_OUTA OUTPUT POWER	10	00 = -4dBm 01 = -1dBm 10 = +2dBm 11 = +5dBm

NOTE 1. f_{RF_OUT} = 34.375MHz.

Table 9K. Register 4: 3-Bit Control Bits. Function Description[1]

Name	Description	Function
CB[3:1]	CONTROL BITS	100 = Register 4 is programmed

NOTE 1. The user has to set CB[3:1] to 100 in order to write to Register 4.

Register 5

Table 10A. Register 5 Bit Allocation[1]

BITS	D31	D30	D29	D28	D27	D26	D25	D24	D23	D22	D21	D20	D19	D18	D17	D16	D15	D14	D13	D12	D11	D10	D9	D8	D7	D6	D5	D4	D3	D2	D1	D0
NAME	RESERVED	RESERVED	RESERVED	RESERVED	RESERVED	RESERVED	RESERVED	RESERVED	LDPInMode2	LDPInMode1	RESERVED	RESERVED	RESERVED	RESERVED	RESERVED	RESERVED	RESERVED	RESERVED	RESERVED	RESERVED	RESERVED	RESERVED	RESERVED	RESERVED	RESERVED	RESERVED	RESERVED	RESERVED	RESERVED	CB3	CB2	CB1
DESCRIPTION	RESERVED								LD PIN MODE		RESERVED																			CONTROL BITS		

NOTE 1. D19 and D20 must be set to 1.

Table 10B. Register 5: 2-Bit LD (Lock Detect) Pin Mode. Function Description

Name	Description	Factory Default	Function
LDPInMode[2:1]	LD PIN MODE	01	00 = Low 01 = Digital Lock Detect 10 = Low 11 = High

Table 10C. Register 5: 3-Bit Control Bits. Function Description[1]

Name	Description	Function
CB[3:1]	CONTROL BITS	101 = Register 5 is programmed

NOTE 1. The user has to set CB[3:1] to 101 in order to write to Register 5.

Extended Registers, (Registers 6 and 7)

Register 6

Table 11A. Register 6 Bit Allocation[1 2 3]

BITS	D31	D30	D29	D28	D27	D26	D25	D24	D23	D22	D21	D20	D19	D18	D17	D16	D15	D14	D13	D12	D11	D10	D9	D8	D7	D6	D5	D4	D3	D2	D1	D0
NAME	DigLock	Band_select_done	Reserved	Reserved	LDP_Ext2	LDP_Ext1	rfoutb_hi_pwr	rfouta_hi_pwr	SDMOrder2	SDMOrder1	DitherG	ShapeDitherEn	SDMType1	SDMType0	band_select_acc2	band_select_acc1	Reserved	Reserved	Reserved	Reserved	Reserved	Reserved	Reserved	Reserved	Reserved	ExtBndSelDiv4	ExtBndSelDiv3	ExtBndSelDiv2	ExtBndSelDiv1	CB3	CB2	CB1
DESCRIPTION	DIGITAL LOCK (RO)	BAND_SELECT_DONE (RO)	RESERVED (RO)	RESERVED (RO)	LDP_EXT		RF_OUTB_HI_PWR	RF_OUTA_HI_PWR	SDM_ORDER		DITHER GAIN	SHAPE_DITHER_EN	SDM_TYPE		BAND_SELECT_ACC		RESERVED (RO)								RESERVED	EXT_BND_SEL_DIV				CONTROL BITS		

NOTE 1. It is recommended that the user writes to Register 0 after writing to Register 6.

NOTE 2. Bit D7 must be set to 0 for correct operation.

NOTE 3. RO Bits are Read Only Bits.

Table 11B. Register 6: 1-Bit Digital Lock Detect. Function Description

Name	Description	Function
DigLock	DIGITAL LOCK	0 = PLL Not Locked 1 = PLL Locked (according LDF and LDP in Register 2)

Table 11C. Register 6: 1-Bit Band Select Status (Read Only). Function Description

Name	Description	Function
Band_select_done	BAND_SELECT_DONE	0 = Band Selection Not Complete 1 = Band Selection Complete

Table 11D. Register 6: 2-Bit Extra Lock Detect Precision. Function Description[1]

Name	Description	Factory Default	Function		
			Extra Bit	LDP Bits in Register 2	Value
LDP_Ext[2:1]	LDP_EXT Extra Lock Detect Precision	00	00	0	10ns
				1	6ns
			01	0	3ns
				1	3ns
			10	0	4ns
				1	4.5ns
			11	0	1.5ns
				1	1.5ns

NOTE 1. LDP_Ext[2:1] are Extra Lock Detect Precision bits. When these bits are set to 00, then the precision of the Lock Detect precision only relies on the LDP bit in Register 2, so that the lock detect window is 10ns or 6ns, depending on the LDP bit in Register 2. For high PFD frequencies, the 6ns window may be larger than the entire ref/FB period. The LDP_ext bits reduce the size of the lock detect window to the value described in Table 11B, Page 36, allowing an accurate lock detection with higher PFD frequencies.

Table 11E. Register 6: 1-Bit Extra Bit of RF_OUTB Power. Function Description[1 2]

Name	Description	Factory Default	Function		
			Extra Bit	RF_OUTB OUTPUT POWER Bits in Register 4	Value (dBm)
rf_outb_hi_pwr	RF_OUTB_HI_PWR	0	0	00	-4
				01	-1
				10	+2
				11	+5
			1	00	+2
				01	+5
				10	+6
				11	+7

NOTE 1. RF_OUTB_HI_PWR is an Extra Bit of RF_OUTB Power that increases the output power to the RF_OUT_B output.

NOTE 2. f_{RF_OUT} = 34.375MHz.

Table 11F. Register 6: 1-Bit Extra Bit of RF_OUTA Power. Function Description[1 2]

Name	Description	Factory Default	Function		
			Extra Bit	RF_OUTA OUTPUT POWER Bits in Register 4	Value (dBm)
rf_outa_hi_pwr	RF_OUTA_HI_PWR	0	0	00	-4
				01	-1
				10	+2
				11	+5
			1	00	+2
				01	+5
				10	+6
				11	+7

NOTE 1. RF_OUTA_HI_PWR is an Extra Bit of RF_OUTA Power that increases the output power to the RF_OUT_A output.

NOTE 2. f_{RF_OUT} = 34.375MHz.

Table 11G. Register 6: 2-Bit Sigma Delta Modulator Order Configuration. Function Description

Name	Description	Factory Default	Function
SDMOrder[2:1]	SDM_ORDER	11	00 = OFF. The device operates in integer mode and the fractional part is ignored. 01 = 1st order 10 = 2nd order 11 = 3rd order

Table 11H. Register 6: 2-Bit Dither Gain Configuration. Function Description

Name	Description	Factory Default	Function
DitherG	DITHER GAIN	0	0 = LSB Dither (Recommended) 1 = LSB x4 Dither

Table 11I. Register 6: 1-Bit Dither Noise Shaping Configuration. Function Description

Name	Description	Factory Default	Function
ShapeDitheren	SHAPE_DITHER_EN	1	0 = Dither Noise Shaping Disabled 1 = Dither Noise Shaping Enabled

Table 11J. Register 6: 1-Bit Sigma Delta Modulator Type Configuration. Function Description

Name	Description	Factory Default	Function
SDMType[2:1]	SDM_TYPE	01	00 = Reserved 01 = SSMF-II 10 = SSMF-I 11 = SSMF-B

Table 11K. Register 6: 2-Bit VCO Band Selection Accuracy Configuration. Function Description

Name	Description	Factory Default	Function
band_select_acc[2:1]	BAND_SELECT_ACC	00	00 = 1 cycle of the band select clock (output of the Band Select Divider) 01 = 2 cycles 10 = 4 cycles 11 = Reserved

Table 11N. Register 6: 4-Bit Extra Most Significant Bits of Band Select Divider. Function Description[1 2]

Name	Description	Factory Default	Value	Function
ExtBndSelDiv[4:1]	EXT_BND_SEL_DIV	0000	BSCC_R4 + [EXT_BND_SEL_DIV]x256	0000 = [BSCC_R4]
				0001 =[BSCC_R4]+256
				0010 = [BSCC_R4] + 512
				…….
				1111 = [BSCC_R4]+3840

NOTE 1. EXT_BND_SEL_DIV are Extra 4 MSBs that extend the Band Select Clock Counter in Register 4. These additional bits are necessary for band selection to divide down to <500kHz when high PFD frequencies are used.

NOTE 2. BSCC_R4 is the BAND SELECT CLOCK COUNTER value in Register 4.

Table 11O. Register 6: 3-Bit Control Bits. Function Description[1]

Name	Description	Function
CB[3:1]	CONTROL BITS	110 = Register 6 is programmed

NOTE 1. The user has to set CB[3:1] to 110 in order to write to Register 6.

Register 7

Table 12A. Register 7 Bit Allocation[1 2]

BITS	NAME	DESCRIPTION
D31	Loss_Dig_Lock	LOSS_DIG_LOCK (SB)
D30	Loss_Anlg_Lock	LOSS_ANLG_LOCK (SB)
D29	Spi_error	SPI_ERROR (SB)
D28	Reserved	RESERVED
D27	Rev_ID3	REV_ID (RO)
D26	Rev_ID2	
D25	Rev_ID1	
D24	Dev_ID4	DEV_ID (RO)
D23	Dev_ID3	
D22	Dev_ID2	
D21	Dev_ID1	
D20	16b_12b_-sel	16b_12b_SEL
D19	RESERVED	RESERVED
D18	RESERVED	RESERVED
D17	RESERVED	RESERVED
D16	RESERVED	RESERVED
D15	ext_mod4	EXT_MOD
D14	ext_mod3	
D13	ext_mod2	
D12	ext_mod1	
D11	ext_fdiv4	EXT_FRAC
D10	ext_fdiv3	
D9	ext_fdiv2	
D8	ext_fdiv1	
D7	sclke	SCLKE
D6	Rd_Addr3	READBACK_ADDR
D5	Rd_Addr2	
D4	Rd_Addr1	
D3	SPI_R_WN	SPI_R_WN
D2	CB3	CONTROL BITS
D1	CB2	
D0	CB1	

NOTE 1. SB Bits are Sticky Bits and need to be cleared.

NOTE 2. RO Bits are Read Only Bits.

Table 12B. Register 7: 1-Bit Loss of Digital Lock. Function Description[1]

Name	Description	Function
Loss_Dig_Lock	LOSS_DIG_LOCK	0 = Locked since last time register was cleared 1 = Loss of Digital Lock since last time register was cleared

NOTE 1. This bit is a sticky bit and needs to be cleared with a SPI write of 1 to detect further Loss of Digital Lock occurrences.

Table 12C. Register 7: 1-Bit Loss of Analog Lock. Function Description[1]

Name	Description	Function
Loss_Anlg_Lock	LOSS_ANLG_LOCK	0 = Band Selection remained the same since last time register was cleared 1 = Band selection occurred since last time register was cleared

NOTE 1. This bit is a sticky bit and needs to be cleared with a SPI write of 1 to detect further Band Selection occurrences.

Table 12D. Register 7: 1-Bit SPI Error. Function Description[1]

Name	Description	Function
Spi_error	SPI_ERROR	0 = No SPI write error detection 1 = SPI Write error

NOTE 1. Spi_error Bit goes high if the SPI interface detects a cycle with the incorrect number of SCLK cycles between nCS asserted Low and nCS asserted High. The SPI interface expects 32 clock cycles between nCS asserted Low and nCS asserted High. Any Read/Write via the SPI interface with more or less than 32 clock cycles will result in the Spi_error Bit switched to 1. This bit is a sticky bit and needs to be cleared with a SPI write of 1 in order to detect further possible SPI Write/Read errors.

Table 12E. Register 7: 3-Bit Revision ID. Function Description

Name	Description	Factory Default
Rev_ID[3:1]	REV_ID	001

Table 12F. Register 7: 4-Bit Device ID. Function Description

Name	Description	Factory Default
Dev_ID[4:1]	DEV_ID	0110

Table 12G. Register 7: 1-Bit Resolution Select. Function Description

Name	Description	Factory Default	Function
16b_12b_sel	16b_12b_SEL	0	0 = FRAC, PHASE and MOD set to 12-Bit resolution, Bit[D19:D8] set to 0 and unused
			1 = FRAC, PHASE and MOD set to 16-Bit resolution

Table 12J. Register 7: 4-Bit Extra Bits of MOD Value. Function Description[1]

Name	Description	Factory Default	Function		
			MOD	EXT_MOD	Value
ext_mod[4:1]	EXT_MOD	0000	0000 0000 0000	0000	Not Allowed
				0001	Not Allowed
				0010	2
				. . .	. . .
				1111	15
			0000 0000 0001	0000	16
				. . .	. . .
				1111	31
			. . .		
			1111 1111 1111	0000	65520
				. . .	. . .
				1111	65535

NOTE 1. Bit D20 in Register 7 (16b_12b_SEL) is required to be set to 1 when using this table. If Bit D20 in Register 7 (16b_12b_SEL) is set to 0, refer to Table 6D, Page 25.

Table 12K. Register 7: 4-Bit Extra Bits of FRAC Value. Function Description[1]

Name	Description	Factory Default	Function		
			FRAC	EXT_FRAC	Value
ext_fdiv[4:1]	EXT_FRAC	0000	0000 0000 0000	0000	0
				0001	1
				. . .	. . .
				1111	15
			0000 0000 0001	0000	16
				. . .	. . .
				1111	31
			. . .		
			1111 1111 1111	0000	65520
				. . .	. . .
				1111	65535

NOTE 1. Bit D20 in Register 7 (16b_12b_SEL) is required to be set to 1 when using this table. If Bit D20 in Register 7 (16b_12b_SEL) is set to 0, refer to Table 5C, Page 22.

Table 12L. Register 7: 1-Bit SCLKE. Function Description

Name	Description	Factory Default	Function
Sclke	SCLKE	1	0 = Output Data in a Read Cycle on a Rising Edge of SCLK 1 = Output Data in a Read Cycle on a Falling Edge of SCLK

Table 12M. Register 7: 1-Bit READBACK_ADDR. Function Description[1]

Name	Description	Function
Rd_Addr[3:1]	READBACK_ADDR	000 = Register 0 001 = Register 1 010 = Register 2 011 = Register 3 100 = Register 4 101 = Register 5 110 = Register 6 111 = Register 7

NOTE 1. In order to Read a register, the user must write to Register 7 first and set the SPI_R_WN Bit to 1 (READ) and indicate the address of the register to read in the READBACK_ADDR Bit (Bits[D6:D4]).

Table 12N. Register 7: 1-Bit SPI_R_WN. Function Description[1]

Name	Description	Factory Default	Function
SPI_R_WN	SPI_R_WN	0	0 = WRITE 1 = READ

NOTE 1. Writing this bit to a ‘1’ will allow the user to read back the register selected in READBACK_ADDR on the next 32 SCLK cycle. This bit will revert back to ‘0’ once it is written with ‘1’ and will not retain the ‘1’ value.

Table 12O. Register 7: 3-Bit Control Bits. Function Description[1]

Name	Description	Function
CB[3:1]	CONTROL BITS	111 = Register 7 is programmed

NOTE 1. The user has to set CB[3:1] to 111 in order to write to Register 7.

Absolute Maximum Ratings

NOTE: Stresses beyond those listed under ***Absolute Maximum Ratings*** may cause permanent damage to the device.
These ratings are stress specifications only. Functional operation of product at these conditions or any conditions beyond those listed in the ***DC Characteristics or AC Characteristics*** is not implied. Exposure to absolute maximum rating conditions for extended periods may affect product reliability.

Table 13. Absolute Maximum Ratings

Item	Rating
Supply Voltage, V_{DDX}	3.63V
Analog Supply Voltage, V_{DDA}	3.63V
Input, V_I REF_IN Other Inputs (MUTE, SDI, FLSW, V_{TUNE})	-0.5 to V_{DDA} + 0.5V
Outputs, V_O RF_OUT_{A-B}, nRF_OUT_{A-B}	-0.5 to V_{DDA} + 0.5V
Outputs, V_O (SCLK, LD, nCS, MUX_OUT)	-0.5 to V_{DDA} + 0.5V
Outputs, I_O Continuous Current Surge Current	 40mA 65mA
Outputs, I_O (SCLK, LD, nCS, MUX_OUT) Continuous Current Surge Current	 8mA 13mA
Junction Temperature, T_J	125°C
Storage Temperature, T_{STG}	-65°C to 150°C

NOTE: V_{DDX} denotes V_{DDD}, $V_{_CP}$, V_{DD_SD}, V_{VCO}.

DC Electrical Characteristics

Table 14A. Power Supply DC Characteristics, $V_{DDX} = V_{DDA} = 3.3V \pm 5\%$, T_A = -40°C to +85°C[1 2 3]

Symbol	Parameter	Test Conditions	Minimum	Typical	Maximum	Units
V_{DDX}	Core Supply Voltage		3.135	3.3	3.465	V
V_{DDA}	Analog Supply Voltage		3.135	3.3	3.465	V
I_{DDX}[4]	Power Supply Current			95	105	mA
I_{DDA}[5]	Analog Supply Current	RF_OUT_A / nRF_OUT_A - Active RF_OUT_B / nRF_OUT_B - Muted		60	75	mA
		RF_OUT_A / nRF_OUT_A - Active RF_OUT_B / nRF_OUT_B - Active		80	100	mA
		RF_OUT_A / nRF_OUT_A - Muted RF_OUT_B / nRF_OUT_B - Muted		37	45	mA
I_{VCO}	VCO Supply Current			60		mA
	Power Down Mode			15	20	mA

NOTE 1. V_{DDX} denotes V_{DDD}, $V_{_CP}$, V_{DD_SD}, V_{VCO}.

NOTE 2. RF Outputs Terminated 50Ω ±1% to V_{DDA}.

NOTE 3. Output Power set to +2dBm.

NOTE 4. I_{DDX} denotes $I_{DDD} + I_{_CP} + I_{DD_SD} + I_{VCO}$.

NOTE 5. I_{DDA} is dependent on the value of the M0 output divider. The numbers indicated for I_{DDA} show the current consumption when using the output divider M0 = 64, for which I_{DDA} is higher than when using any other M0 divider value.

Table 14B. Output Divider Incremental Current[1]

Parameter	Test Conditions	Minimum	Typical	Maximum	Units
Output Divider Supply Current	Divide by 2		8.0		mA
	Divide by 4		7.0		mA
	Divide by 8		1.5		mA
	Divide by 16		1.5		mA
	Divide by 32		1.5		mA
	Divide by 64		1.5		mA

NOTE 1. RF Output divider (÷MO) has an incremental increase in current as the divider value increases. This specification is the incremental current change per output divider step. For example, current of divide-by-2 is 8mA more than divide-by-1, current of divide-by-4 is 7mA more than divide-by-2, and so on. The total increase from ÷1 to ÷64 is 8mA + 7mA + 1.5mA + 1.5mA + 1.5mA + 1.5mA = 21mA.

Table 14C. Typical Current by Power Domain[1]

Pin Name	Pin Number	Typical Current	Unit
$V_{_CP}$	6	24	mA
V_{VCO}	16, 17	15	mA
V_{DDD}	28	0.5	mA
V_{DD_SD}	32	6	mA
V_{DDA}	10	52	mA

NOTE 1. Operating conditions are:
REF_IN = 25MHz
INT = 100 (integer mode)
RF Divider = ÷1
$RF_OUT_A = RF_OUT_B = 2.5GHz$
$RF_{POWER} = -1dBm$
Charge Pump = 0.31mA

Table 14D. LVCMOS DC Characteristics, $V_{DDX} = V_{DDA} = 3.3V \pm 5\%$, $T_A = -40°C$ to $85°C$[1]

Symbol	Parameter		Test Conditions	Minimum	Typical	Maximum	Units
V_{IH}	Input High Voltage	MUTE, CE		1.8		V_{DDx}	V
		SDI, SCLK, nCS		1.5		V_{DDx}	V
V_{IL}	Input Low Voltage			-0.3		0.6	V
I_{IH}	Input High Current	SDI, MUTE, CE	$V_{DDx} = 3.465V$, $V_{IN} = 1.8V$			5	µA
		SCLK, nCS	$V_{DDx} = 3.465V$, $V_{IN} = 1.8V$			150	µA
I_{IL}	Input Low Current	SDI, MUTE, CE	$V_{DDx} = 3.465V$, $V_{IN} = 0V$	-150			µA
		SCLK, nCS	$V_{DDx} = 3.465V$, $V_{IN} = 0V$	-5			µA
V_{OH}	Output High Voltage	MUX_OUT, LD	$V_{DDx} = 3.465V$; $I_{OH} = -500µA$	$V_{DDX} - 0.4$			V
V_{OL}	Output Low Voltage	MUX_OUT, LD	$V_{DDx} = 3.465V$; $I_{OL} = 500µA$			0.4	V

NOTE 1. V_{DDX} denotes V_{DDD}, $V_{_CP}$, V_{DD_SD}, V_{VCO}.

AC Electrical Characteristics

Table 15A. AC Characteristics, V_{DDX} = V_{DDA} = 3.3V ± 5%, T_A = -40°C to 85°C[1]

Symbol	Parameter		Test Conditions	Minimum	Typical	Maximum	Units
REF_IN	Input Reference Frequency[2]		Ref Doubler Disabled	5		310	MHz
			Ref Doubler Enabled	5		100	MHz
V_{PP}	Input Sensitivity	REF_IN	Biased at $V_{DDA}/2$[3]	0.7		V_{DDA}	V
f_{VCO}	VCO Frequency		Fundamental VCO Mode	2200		4400	MHz
f_{RF_OUT}	Output Frequency		Divider Values: 1, 2, 4, 8, 16, 32, 64	34.375		4400	MHz
f_{PFD}	PFD Frequency		Fractional Mode			125	MHz
			Integer Mode			310	MHz
K_{VCO}	VCO Sensitivity				40		MHz/V
t_{LOCK}	PLL Lock Time		Time from Low to High nCS until at Normal Mode, Low to High LD		200		µs
-	Output Power Variation				±1		dB
-	RF Output Power		Muted, (M0 ≠ 1)		<–80		dBm
-	Min/Max VCO Tuning Voltage				0.5 / 2.5		V

NOTE 1. V_{DDX} denotes V_{DDD}, $V_{_CP}$, V_{DD_SD}, V_{VCO}.

NOTE 2. For REF_IN <10MHz, the slew rate must be >21V/µs.

NOTE 3. AC-coupling the reference signal ensures $V_{DDA}/2$ biasing.

Table 15B. RF_OUT$_{[A:B]}$ Phase Noise and Jitter Characteristics, V_{DDX} = V_{DDA} = 3.3V ± 5%, T_A = -40°C to 85°C[1 2]

Symbol	Parameter	Test Conditions	Minimum	Typical	Maximum	Units
tjit(Ø)	RMS Phase Jitter (Random)	f = 156.25MHz Integration Range: 12kHz - 20MHz		220		fs
		f = 2.05GHz Integration Range: 12kHz - 20MHz		218		fs
		f = 1.76GHz Integration Range: 12kHz - 20MHz		166		fs
φ_N(100k)	RF Output Phase Noise Performance @ 745MHz (Open Loop)	100kHz Offset from Carrier		-122.76		dBc/Hz
φ_N(800k)		800kHz Offset from Carrier		-146.18		dBc/Hz
φ_N(1M)		1MHz Offset from Carrier		-147.80		dBc/Hz
φ_N(5M)		5MHz Offset from Carrier		-155.36		dBc/Hz
φ_N(10M)		10MHz Offset from Carrier		-156.50		dBc/Hz
φ_N(∞)		Noise Floor (≥30MHz from Carrier)		-157.31		dBc/Hz
φ_N(100k)	RF Output Phase Noise Performance @ 1.1GHz (Open Loop)	100kHz Offset from Carrier		-114.07		dBc/Hz
φ_N(800k)		800kHz Offset from Carrier		-136.57		dBc/Hz
φ_N(1M)		1MHz Offset from Carrier		-138.67		dBc/Hz
φ_N(5M)		5MHz Offset from Carrier		-151.50		dBc/Hz
φ_N(10M)		10MHz Offset from Carrier		-154.42		dBc/Hz
φ_N(∞)		Noise Floor (≥30MHz from Carrier)		-155.93		dBc/Hz
φ_N(100k)	RF Output Phase Noise Performance @ 1.65GHz (Open Loop)	100kHz Offset from Carrier		-114.30		dBc/Hz
φ_N(800k)		800kHz Offset from Carrier		-139.19		dBc/Hz
φ_N(1M)		1MHz Offset from Carrier		-141.38		dBc/Hz
φ_N(5M)		5MHz Offset from Carrier		-152.70		dBc/Hz
φ_N(10M)		10MHz Offset from Carrier		-154.39		dBc/Hz
φ_N(∞)		Noise Floor (≥30MHz from Carrier)		-155.79		dBc/Hz
φ_N(100k)	RF Output Phase Noise Performance @ 2.3GHz (Open Loop)	100kHz Offset from Carrier		-108.48		dBc/Hz
φ_N(800k)		800kHz Offset from Carrier		-131.19		dBc/Hz
φ_N(1M)		1MHz Offset from Carrier		-133.38		dBc/Hz
φ_N(5M)		5MHz Offset from Carrier		-147.77		dBc/Hz
φ_N(10M)		10MHz Offset from Carrier		-152.47		dBc/Hz
φ_N(∞)		Noise Floor (≥30MHz from Carrier)		-155.77		dBc/Hz
φ_N(100k)	RF Output Phase Noise Performance @ 3.8GHz (Open Loop)	100kHz Offset from Carrier		-103.22		dBc/Hz
φ_N(800k)		800kHz Offset from Carrier		-127.59		dBc/Hz
φ_N(1M)		1MHz Offset from Carrier		-129.92		dBc/Hz
φ_N(5M)		5MHz Offset from Carrier		-145.39		dBc/Hz
φ_N(10M)		10MHz Offset from Carrier		-150.27		dBc/Hz
φ_N(∞)		Noise Floor (≥30MHz from Carrier)		-153.72		dBc/Hz

Table 15B. $RF_OUT_{[A:B]}$ Phase Noise and Jitter Characteristics, $V_{DDX} = V_{DDA} = 3.3V \pm 5\%$, T_A = -40°C to 85°C[1 2]

Symbol	Parameter	Test Conditions	Minimum	Typical	Maximum	Units
$\varphi_N(100k)$	RF Output Phase Noise Performance @ 4.4GHz (Open Loop)	100kHz Offset from Carrier		-100.26		dBc/Hz
$\varphi_N(800k)$		800kHz Offset from Carrier		-125.80		dBc/Hz
$\varphi_N(1M)$		1MHz Offset from Carrier		-128.17		dBc/Hz
$\varphi_N(5M)$		5MHz Offset from Carrier		-143.81		dBc/Hz
$\varphi_N(10M)$		10MHz Offset from Carrier		-148.47		dBc/Hz
$\varphi_N(\infty)$		Noise Floor (≥30MHz from Carrier)		-153.01		dBc/Hz
-	Spurious Signals Due to PFD Frequency	f_{PFD} = 50MHz; RF_OUT_A = 2.2GHz		-74		dBc
$\varphi_N(100k)$	RF Output Phase Noise Performance @ 745MHz (Open Loop)	100kHz Offset from Carrier		-106.75		dBc/Hz

NOTE 1. V_{DDX} denotes V_{DDD}, $V_{_CP}$, V_{DD_SD}, V_{VCO}.

NOTE 2. $RF_OUT_{[A:B]}$ output power setting = +2dBm.

Phase Noise (Closed-Loop) at 156.25MHz (3.3V)

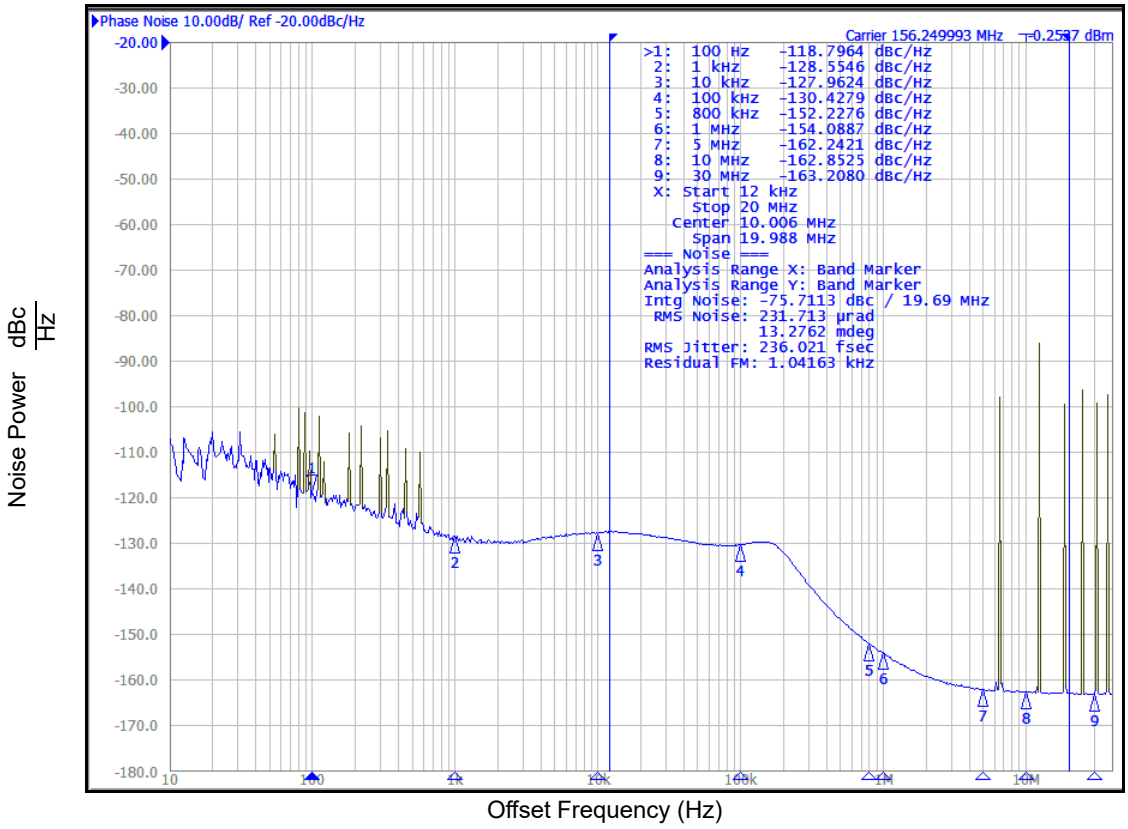

Phase Noise (Closed-Loop) at 1.76GHz (3.3V)

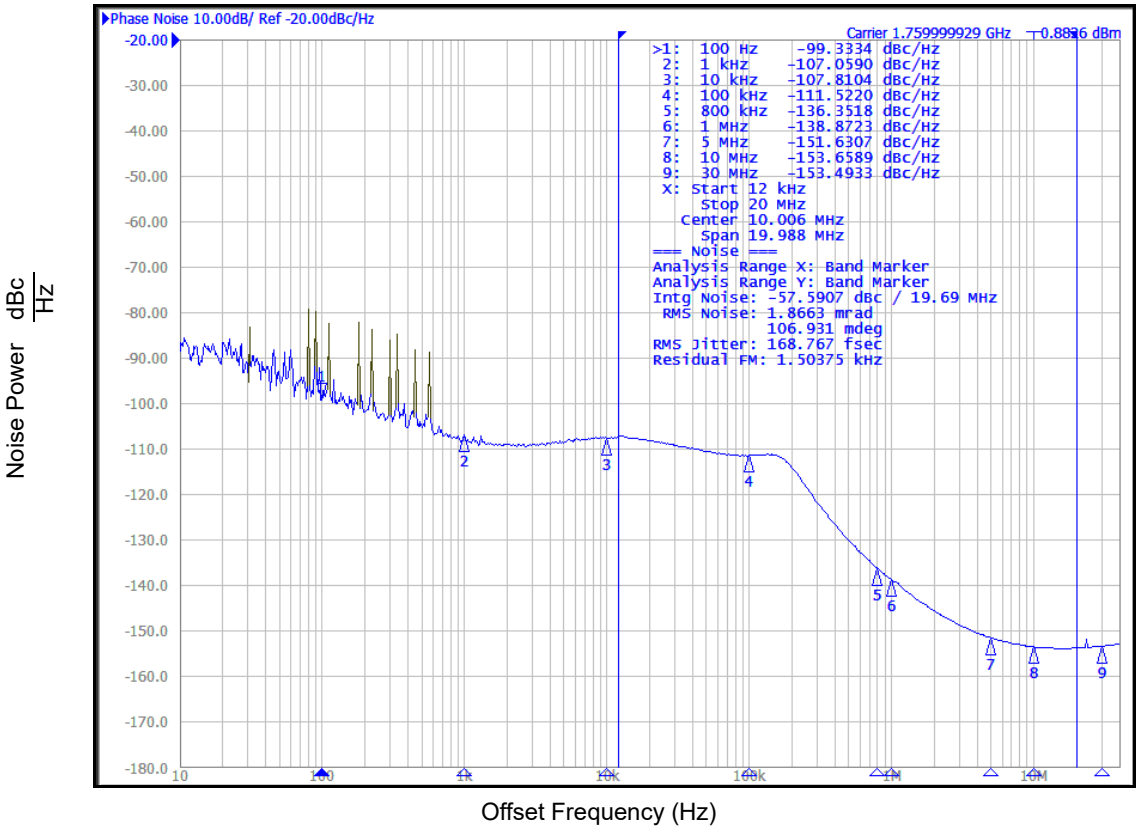

Phase Noise (Closed-Loop) at 2.05GHz (3.3V)

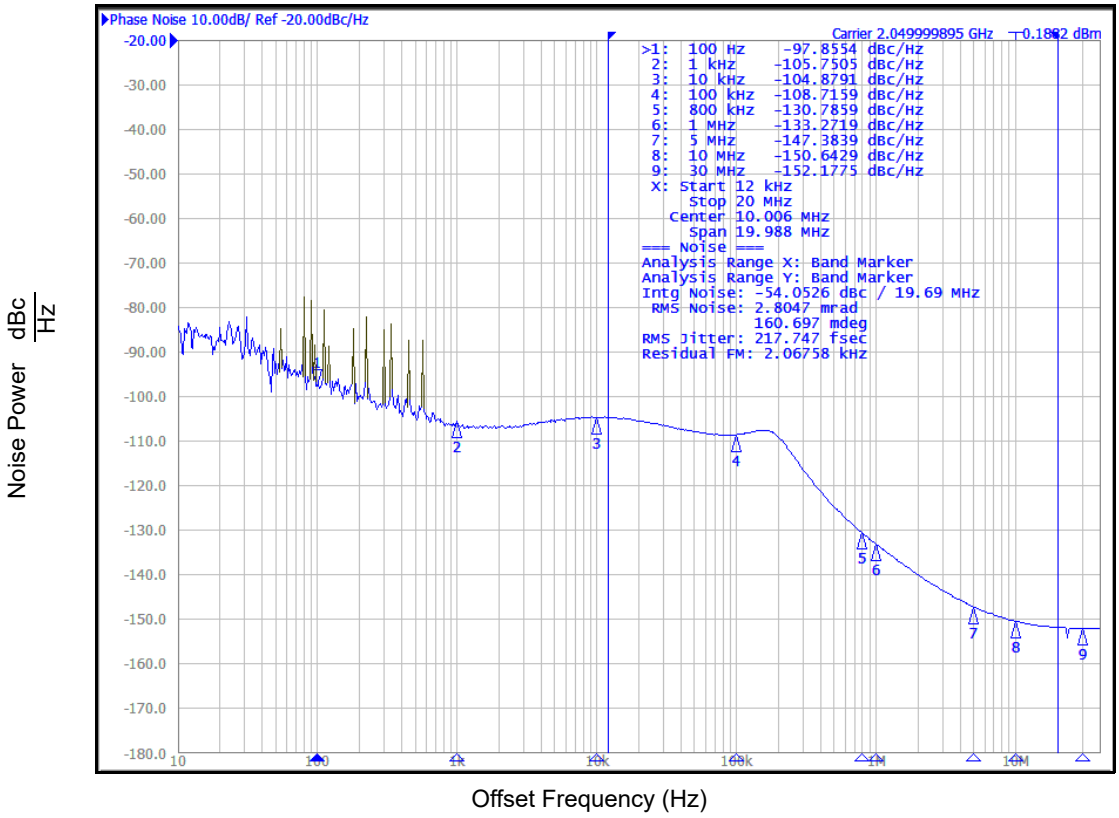

Phase Noise (Open-Loop) at 745MHz (3.3V)

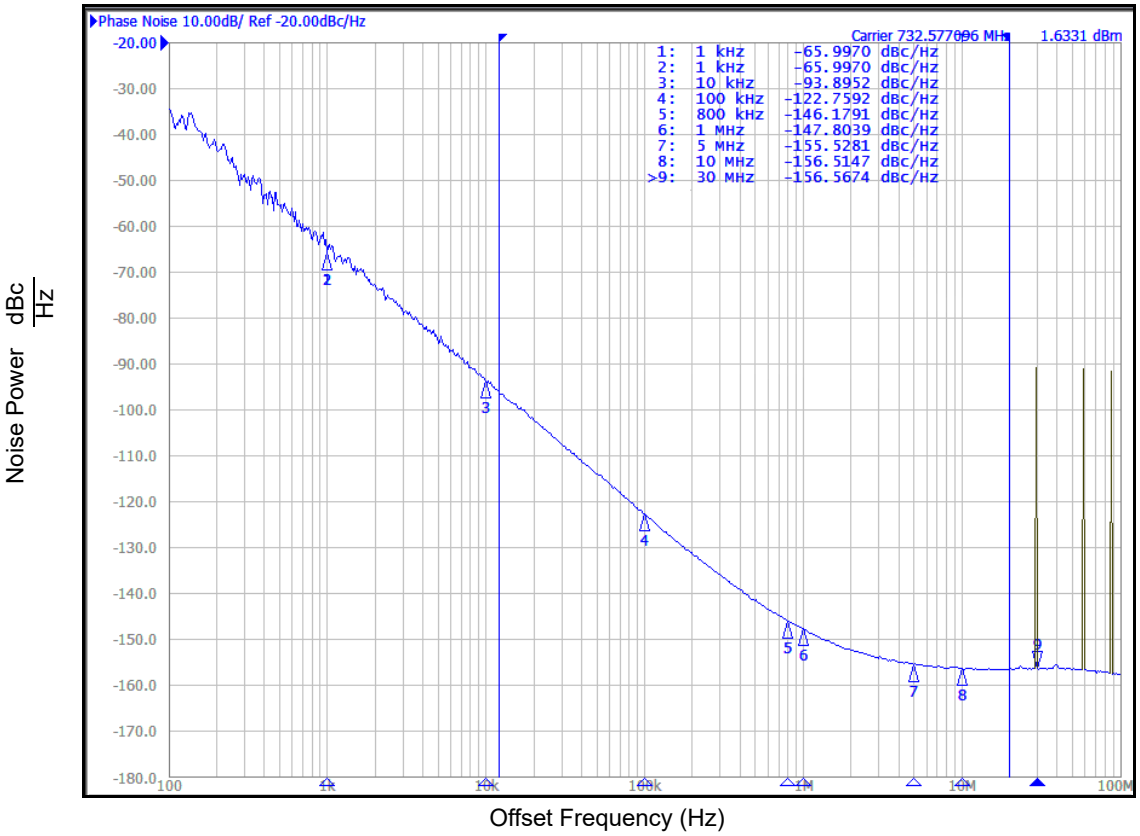

Phase Noise Performance (Open-Loop) at 1.1GHz (3.3V)

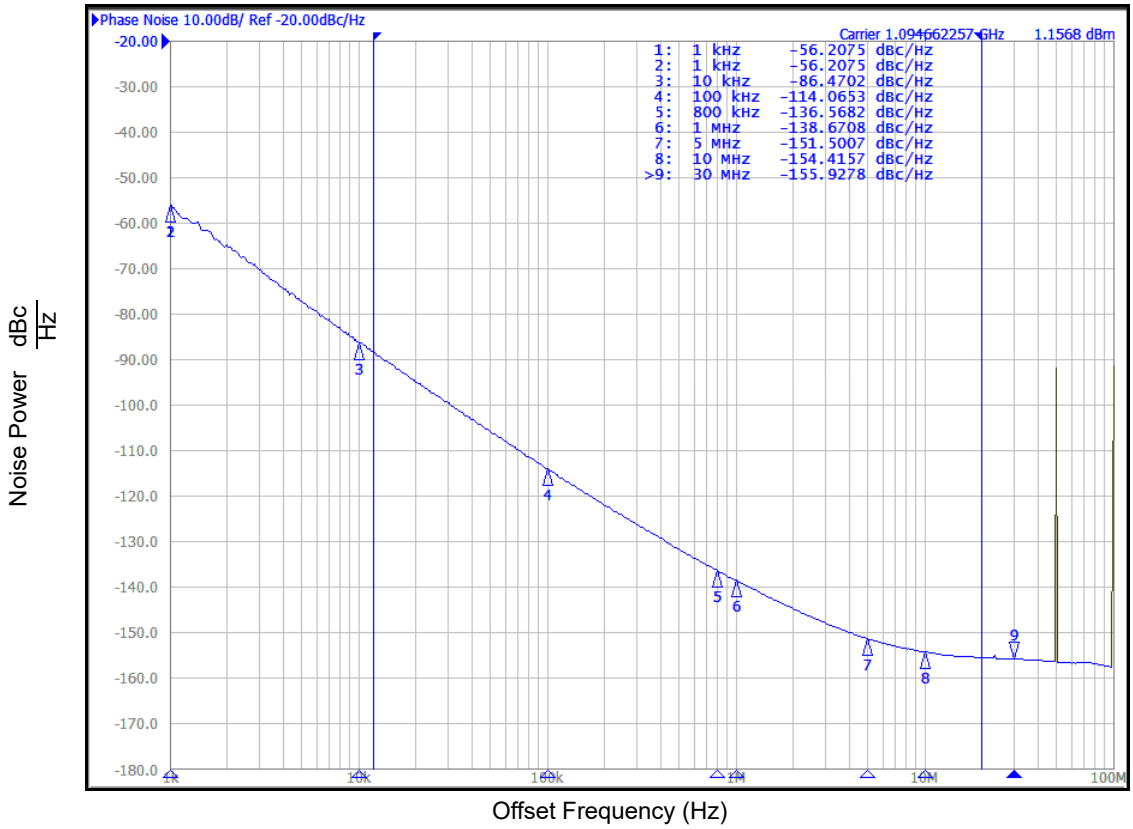

Phase Noise Performance (Open-Loop) at 1.65GHz (3.3V)

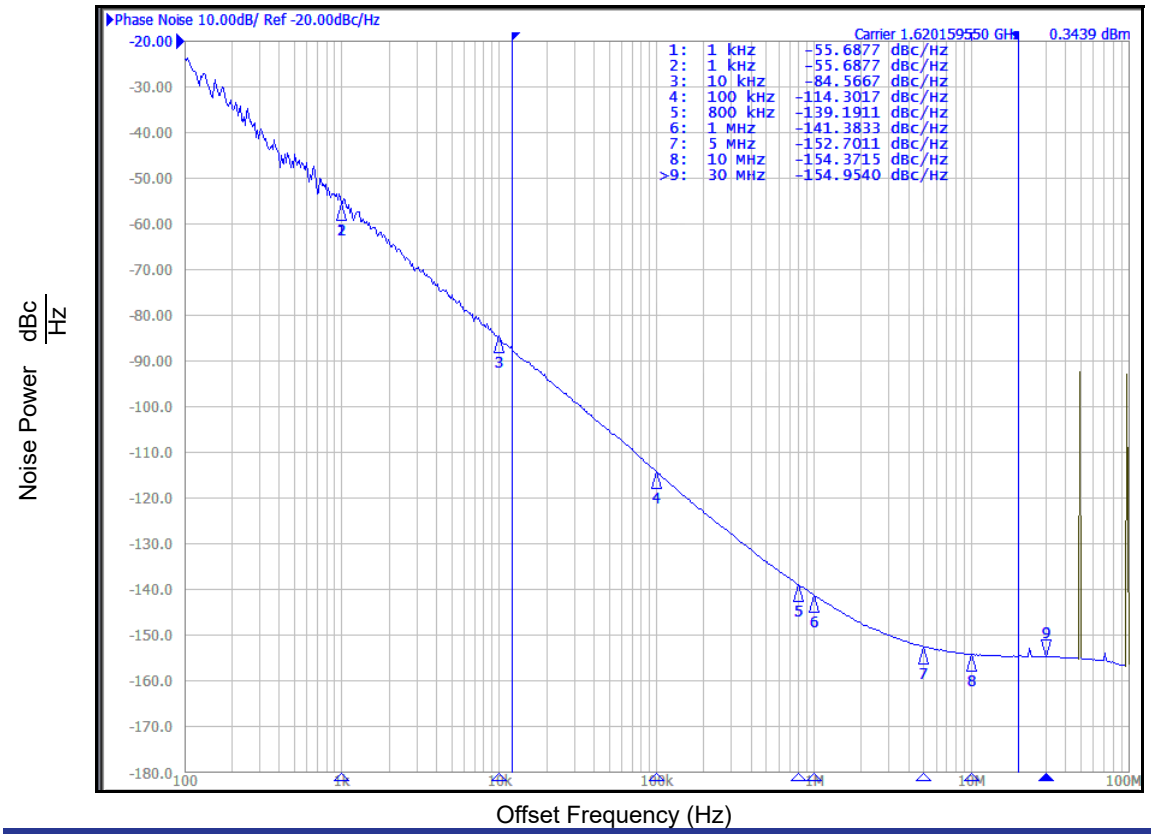

Phase Noise Performance (Open-Loop) at 2.3GHz (3.3V)

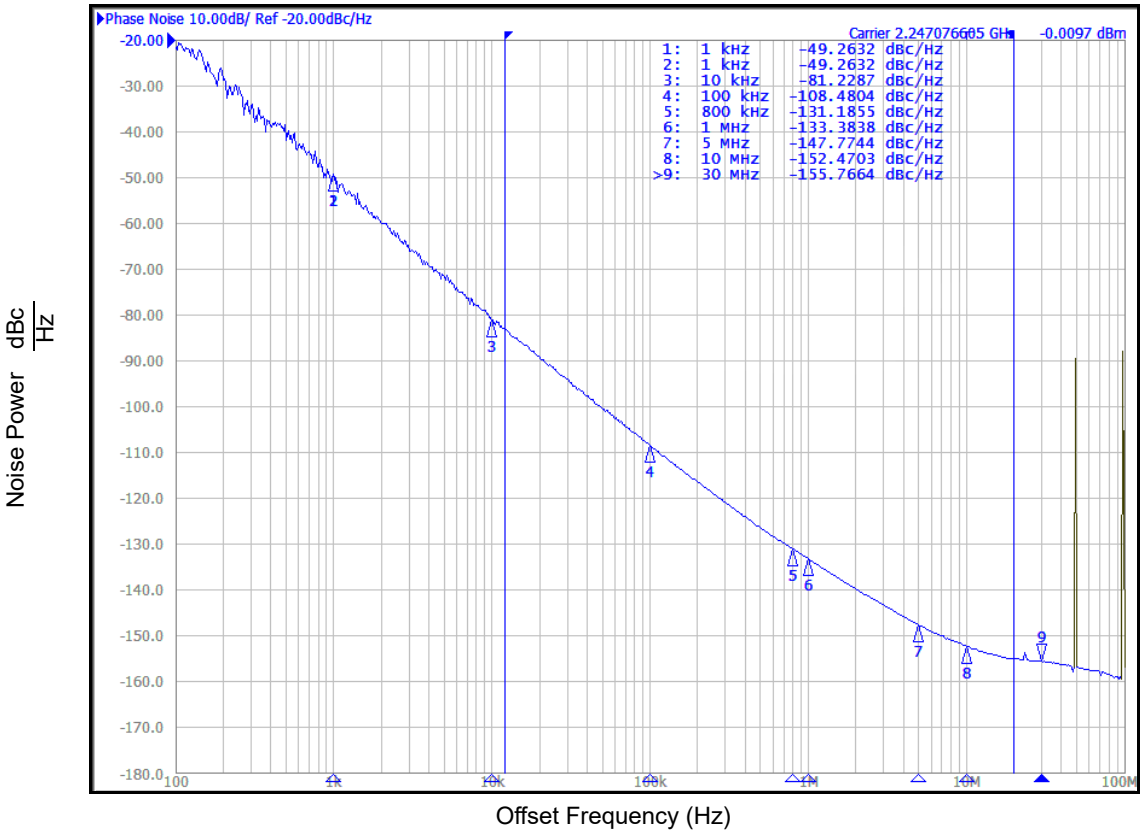

Phase Noise Performance (Open-Loop) at 3.8GHz (3.3V)

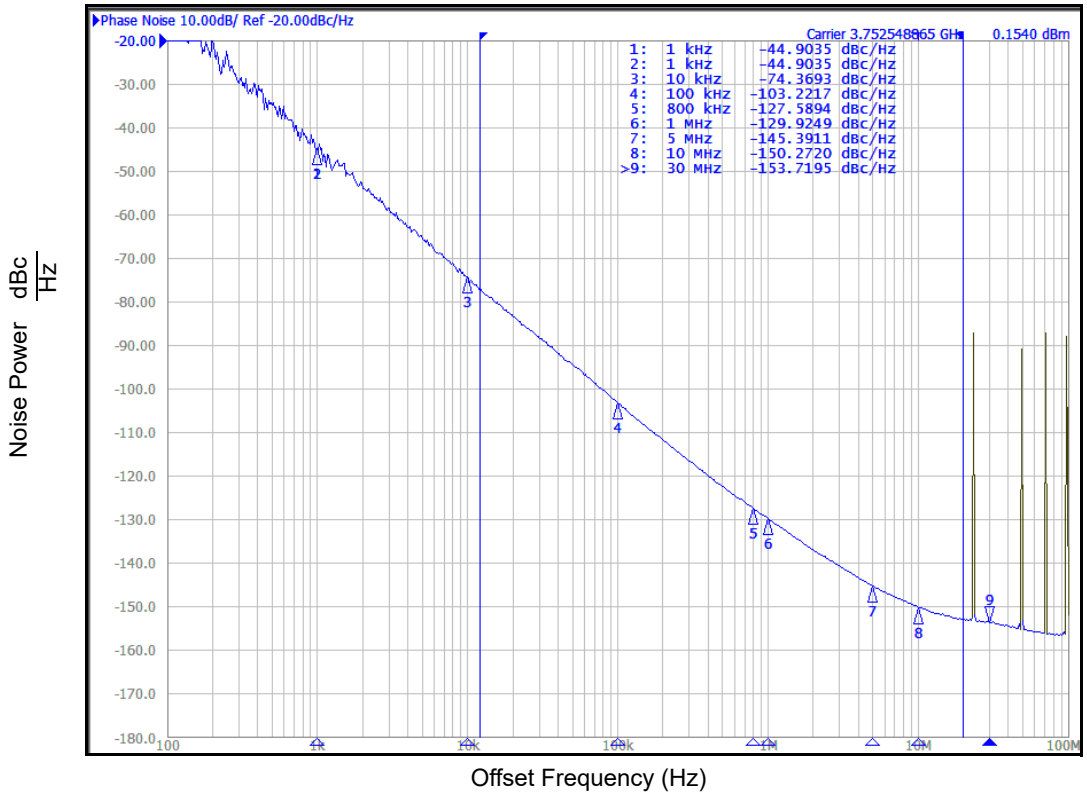

Phase Noise Performance (Open-Loop) at 4.4GHz (3.3V)

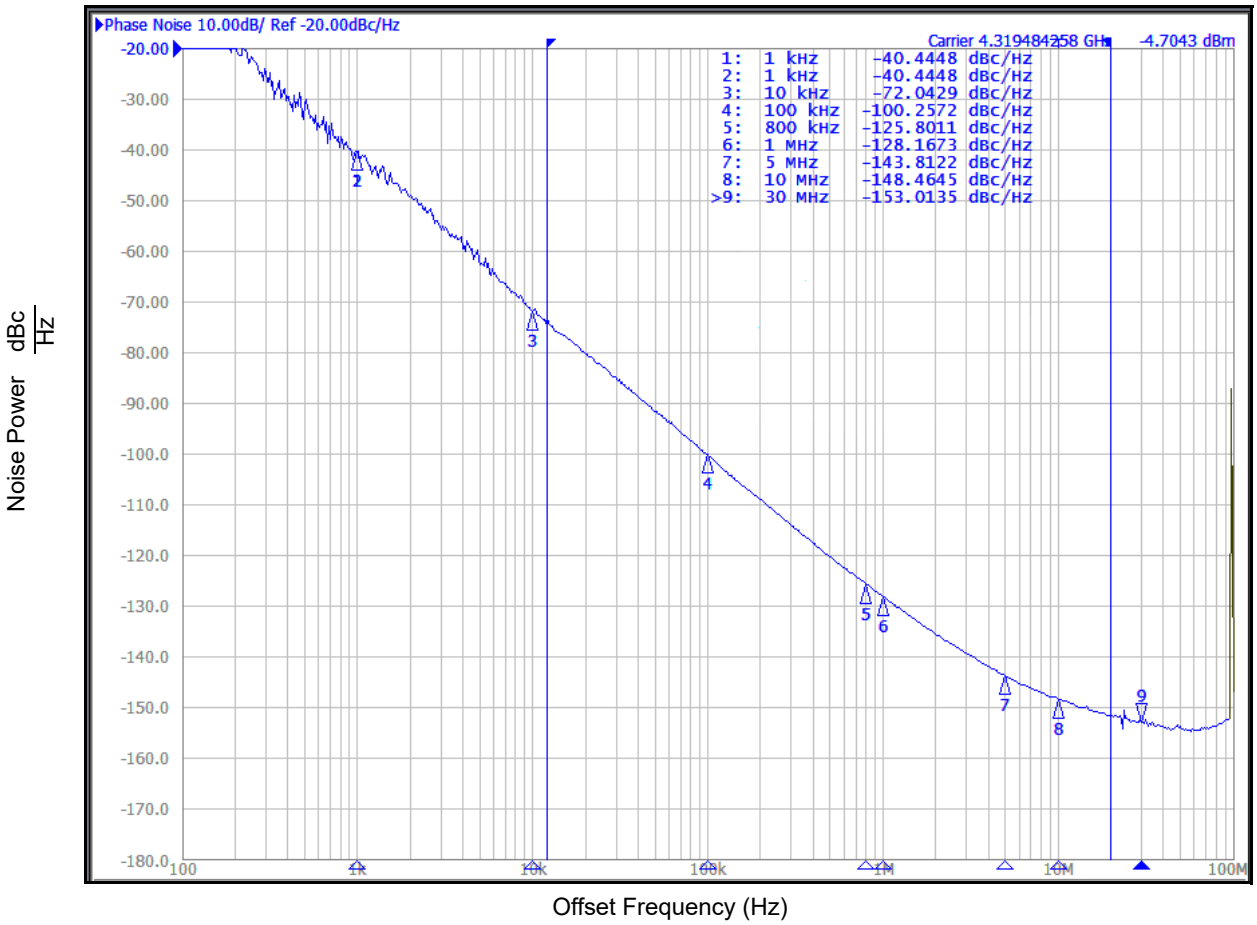

Applications Information

Loop Filter Calculations

2nd Order Loop Filter

This section helps design a 2nd order loop filter for the 8V97053L. A general 2nd order loop filter is shown in Figure 11, *Typical 2nd Order Loop Filter*. Step-by-step calculations to determine Rz, Cz and Cp values for a desired loop bandwidth are described below. Required parameters are provided. A spreadsheet for calculating the loop filter values is also available.

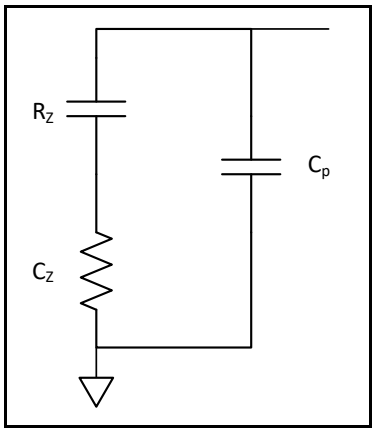

Figure 11. Typical 2nd Order Loop Filter

1. Determine desired loop bandwidth fc.

2. Calculate Rz:

$$Rz = \frac{2 * \pi * fc * N}{Icp * Kvco}$$

Where,

Icp is charge pump current. Icp is programmable from 310µA to 5mA.

N is effective feedback divider. N must be programmed into the following value.

$$N = \frac{Fvco}{Fpd}$$

F_{VCO} is VCO frequency.
VCO frequency range: 2200MHz to 4400MHz

Fpd is phase detector input frequency.

$$Fpd = \frac{F_ref}{Pv}$$

F_ref is reference clock (REF_IN) input frequency.

Pv is overall pre-divider setting.

Kvco is VCO gain. Kvco = 40MHz/V

3. Calculate Cz:

$$Cz = \frac{\alpha}{2 * \pi * fc * Rz}$$

Where,

α = fc/ fz, user can determine an α number.
α > 6 is recommended.

fz is frequency at zero.

4. Calculate Cp:

$$Cp = \frac{Cz}{\alpha * \beta}$$

Where,

β = fp/fc, user can determine β number.
β > 4 is recommended.

fp is frequency at pole.

5. Verify Phase Margin (*PM)*

$$PM = \arctan\left(\frac{b-1}{2 * \sqrt{b}}\right)$$

Where,

$$b = 1 + \frac{Cz}{Cp}$$

The phase margin (PM) should be greater than 50°.

A spreadsheet for calculating the loop filter component values is available at www.IDT.com. To use the spreadsheet, the user simply enters the following parameters:

fc, F_ref, P_V, Icp, F_{VCO}, α and β.

The spreadsheet will provide the component values, Rz, Cz and Cp as the result. The spreadsheet also calculates the maximum phase margin for verification.

3rd Order Loop Filter

This section helps design a 3rd order loop filter for the 8V97053L. A general 3rd order loop filter is shown in Figure 12, *Typical 3rd Order Loop Filter*.

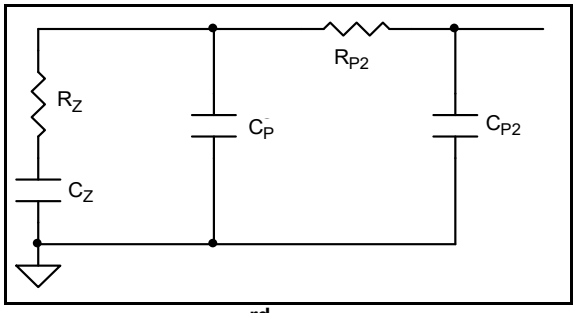

Figure 12. Typical 3rd Order Loop Filter

The Rz, Cz and Cp can be calculated as 2nd order loop filter.
The following equation help determine the 3rd order loop filter Rp2 and Cp2.

Pick an Rp2 value. Rp2 ~ 1.5xRz is suggested.

$$C_{P2} = \frac{R_Z * C_P}{R_{P2} * \gamma}$$

Where,

γ is ratio between the 1st pole frequency and the 2nd pole frequency. $\gamma > 4$ is recommended.

Recommendations for Unused Input and Output Pins

Inputs:

LVCMOS Control Pins

All control pins have internal pullup and pulldown resistors; additional resistance is not required but can be added for additional protection. A 1kΩ resistor can be used.

Outputs:

Output Pins

For any unused output, it can be left floating and disabled.

Schematic Example

Figure 13A and Figure 13B show general application schematic examples for the 8V97053L.

For power rails, bypass capacitors must be provided to all power supply pins. Suggest at least one bypass capacitor per power pin. Value can be ranged from 0.01uF or 0.1uF. Mix values of bypass capacitor can help filtering wider range of power supply noise.

The 8V97053L input is high impedance. The input termination depends on the driver type termination requirements. In these examples, the 8V97053L REF_IN input is terminated with a matched load termination. For transmission line with characteristic impedance Zo = 50Ω, the termination resistor R8 is 50Ω. The input is self biased to proper DC offset after the AC coupling.

The loop filter values can be calculated to meet the loop bandwidth requirement. Please refer to the section, "Loop Filter Calculations" for detailed calculations. For fast lock mode, the loop filter can be configured as Fast Lock Loop Filter Option 1 or Fast Lock Loop Filter Option 2 shown in Figure 13A.

Fast Lock Loop Filter Option 1 is Parallel Resistor Configuration. For normal operating mode, only R5 is active and R5 = Rs, where Rs is the resistor value for normal operating mode loop bandwidth. In fast lock mode, the combination of R4 in parallel with R5 is active. For example, in normal operation mode, if the charge pump current is set at 0000 (ICP = 310uA), then, in fast lock mode, the loop bandwidth is set larger by increasing the charge pump current to ICP~5mA (ICP setting = 1111 or 16 times the normal charge pump current). The combination of the R4 and R5 in parallel is 1/4 * Rs.

Fast Lock Loop Filter Option 2 is Series Resistor Configuration.
For normal operating mode, both R6 and R7 are active and
R6 + R7 = Rs. For fast lock mode, only R6 is active. For example, in normal operation mode, if the charge pump current is set at 0000 (ICP = 310uA), then, in fast lock mode, the loop bandwidth is set larger by increasing the charge pump current to ICP~5mA (ICP setting = 1111 or 16 times the normal charge pump current).
The sum of R6 and R7 equals to Rs, i.e. R6 + R7 = Rs.
R6 = 1/4 * Rs and R7 = 3/4 * Rs.

The 8V97053L output pull-up loading can be resistors or inductors. The pull up resistor value is typically 50Ω. Resistor pull up loading covers wide range of output frequencies. For inductor pull up loading, the inductor value is frequency dependent. One inductor value cannot cover all the output frequency range. This example shows the L = 3.9nH that is suitable for approximately 2GHz operating frequency. The output can also drive single ended LO input. Figure 13B shows an example of the 8V97053L output driving single ended LO input of the mixer through an LC balun. The LC balun component values are frequency dependent. These values can be adjusted to optimize the performance. Single ended LO receiver input also can tap to one side of the differential driver using resistor loading or inductor loading. For single ended LO input, both sides of the differential driver still need to be loaded with pull up. The output power level can also be adjusted further through programming.

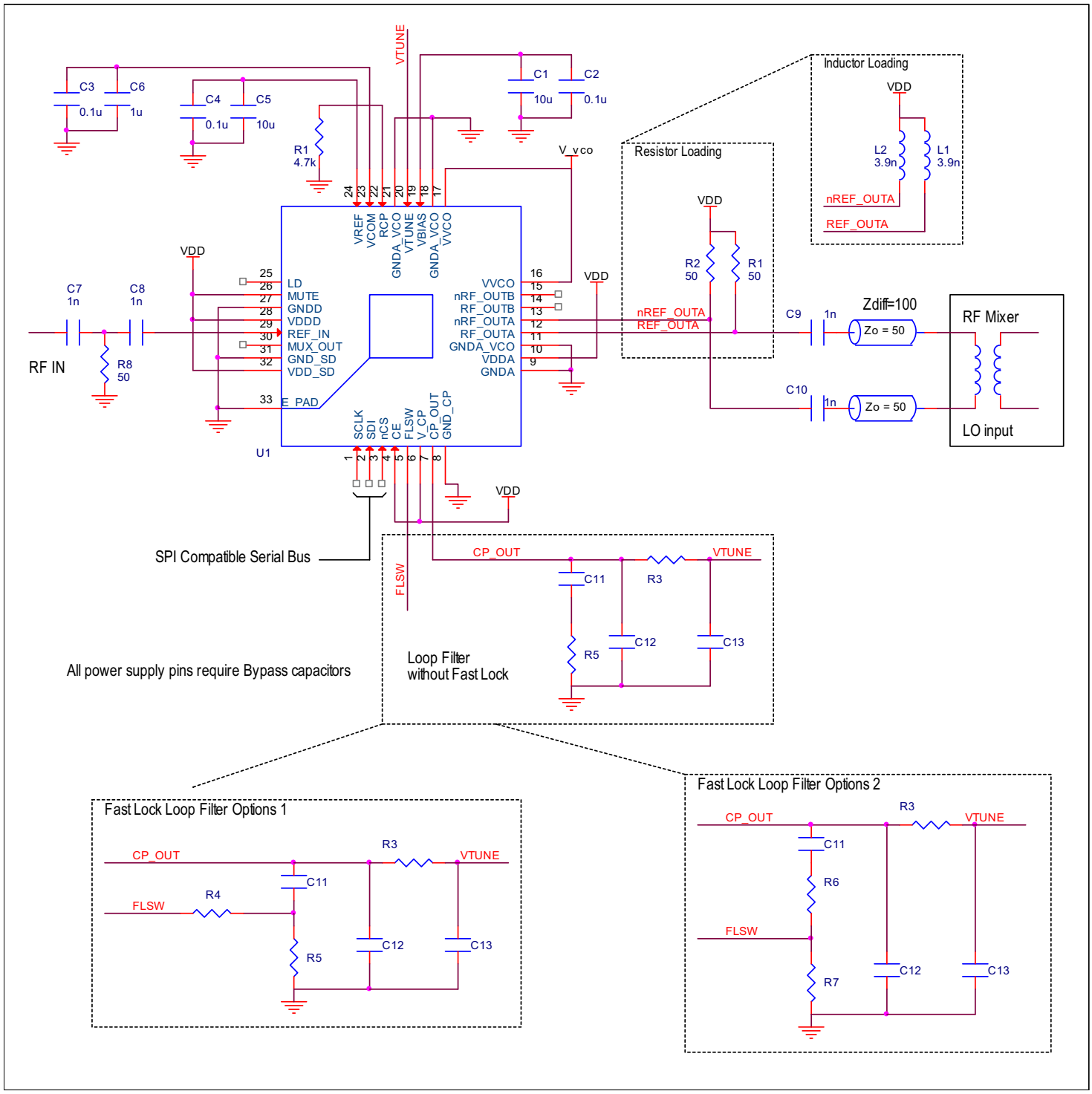

Figure 13A. An 8V97053L General Application Schematic Example

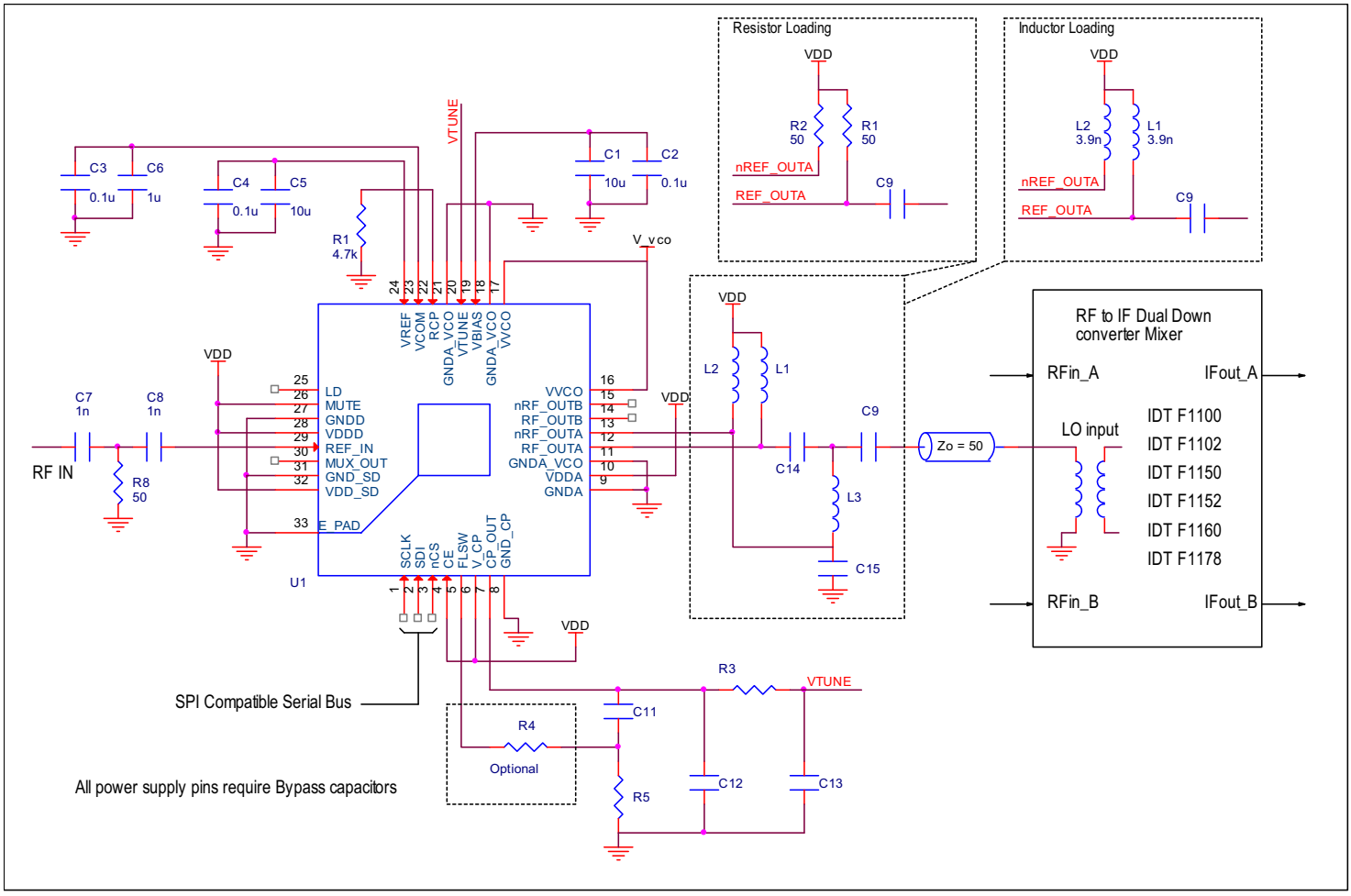

Figure 13B. Schematic Example for Driving Single Ended Mixer

Power Considerations

The 8V97053L device was designed and characterized to operate within the ambient industrial temperature range of -40°C to +85°C. The ambient temperature represents the temperature around the device, not the junction temperature. When using the device in extreme cases, such as maximum operating frequency and high ambient temperature, external air flow may be required in order to ensure a safe and reliable junction temperature. Extreme care must be taken to avoid exceeding 125°C junction temperature. The power calculation example below was generated using a typical configuration. For many applications, the power consumption can vary depending on configuration. Please contact IDT technical support for any concerns on calculating the power dissipation for your own specific configuration.

Example 1: VCO Frequency Range = 1991MHz to 2846MHz

1. Power Dissipation.

The total power dissipation for the 8V97053L is the sum of the core power plus the power dissipation in the output driver.
The following is the power dissipation for V_{DD} = 3.465V, which gives worse case results.

- Power $(core)_{MAX} = V_{DD_MAX} * (I_{DDA} + I_{VCO} + I_{CP} + I_{DD_SD} + I_{DDD})_{MAX} = V_{DD_MAX} * (I_{DDA} + I_{DDX})_{MAX}$ = 3.465V * (100mA + 105) = **710.33mW**

Total Power (with two outputs active at 2dBm output power level) = **710.33mW**

2. Junction Temperature.

Junction temperature, Tj, is the temperature at the junction of the bond wire and bond pad, and directly affects the reliability of the device. The maximum recommended junction temperature is 125°C. Limiting the internal transistor junction temperature, Tj, to 125°C ensures that the bond wire and bond pad temperature remains below 125°C.

The equation for Tj is as follows: $Tj = \theta_{JA} * Pd_total + T_A$

Tj = Junction Temperature

θ_{JA} = Junction-to-Ambient Thermal Resistance

Pd_total = Total Device Power Dissipation (example calculation is in section 1 above)

T_A = Ambient Temperature

In order to calculate junction temperature, the appropriate junction-to-ambient thermal resistance θ_{JA} must be used. Assuming no air flow and a multi-layer board, the appropriate value is 34.34°C/W per Table 16 below.

Therefore, Tj for an ambient temperature of 85°C with all outputs active is:

85°C + 0.710W * 34.34°C/W = 109.39°C. This is well below the limit of 125°C.

This calculation is only an example. Tj will obviously vary depending on the number of loaded outputs, supply voltage, air flow and the type of board (multi-layer).

Table 16. Thermal Resistance θ_{JA} for 32 Lead VFQFN, Forced Convection

θ_{JA} **by Velocity**			
Meters per Second	**0**	**1**	**2**
Multi-Layer PCB, JEDEC Standard Test Boards	34.34°C/W	30.7°C/W	29.12°C/W

Example 2: VCO Frequency Range = 2590MHz to 3624MHz

1. Power Dissipation.

The total power dissipation for the 8V97053L is the sum of the core power plus the power dissipation in the output driver.
The following is the power dissipation for V_{DD} = 3.465V, which gives worse case results.

- Power $(core)_{MAX} = V_{DD_MAX} * (I_{DDA} + I_{VCO} + I_{CP} + I_{DD_SD} + I_{DDD})_{MAX} = V_{DD_MAX} * (I_{DDA} + I_{DDX})_{MAX}$ = 3.465V * (90mA + 95mA) = **640mW**

Total Power (with two outputs active at 2dBm output power level) = **640mW**

2. Junction Temperature.

Junction temperature, Tj, is the temperature at the junction of the bond wire and bond pad, and directly affects the reliability of the device. The maximum recommended junction temperature is 125°C. Limiting the internal transistor junction temperature, Tj, to 125°C ensures that the bond wire and bond pad temperature remains below 125°C.

The equation for Tj is as follows: $Tj = \theta_{JA} * Pd_total + T_A$

Tj = Junction Temperature

θ_{JA} = Junction-to-Ambient Thermal Resistance

Pd_total = Total Device Power Dissipation (example calculation is in section 1 above)

T_A = Ambient Temperature

In order to calculate junction temperature, the appropriate junction-to-ambient thermal resistance θ_{JA} must be used. Assuming no air flow and a multi-layer board, the appropriate value is 34.34°C/W per Table 16.

Therefore, Tj for an ambient temperature of 85°C with all outputs active is:

85°C + 0.640W * 34.34°C/W = 107°C. This is below the limit of 125°C.

This calculation is only an example. Tj will obviously vary depending on the number of loaded outputs, supply voltage, air flow and the type of board (multi-layer).

Reliability Information

Table 17A. θ_{JA} vs. Air Flow Table for a 32 lead VFQFN

θ_{JA} vs. Air Flow			
Meters per Second	**0**	**1**	**2**
Multi-Layer PCB, JEDEC Standard Test Boards	34.34°C/W	30.7°C/W	29.12°C/W

Table 17B. θ_{JB} vs. Air Flow Table for a 32 lead VFQFN

θ_{JB} vs. Air Flow	
Meters per Second	**0**
Multi-Layer PCB, JEDEC Standard Test Boards	0.472°C/W

NOTE: θ_{JB} is independent of airflow.

Transistor Count

The 8V97053L transistor count is: 404,777

Package Outline Drawings

The package outline drawings are appended at the end of this document and are accessible from the link below. The package information is the most current data available.

www.idt.com/document/psc/32-vfqfpn-package-outline-drawing-50-x-50-x-090-mm-body-epad-315-x-315-mm-nlg32p1

Ordering Information

Table 18. Ordering Information

Part/Order Number	Marking	Package	Shipping Packaging	Temperature
8V97053LNLGI	IDT8V97053LNLGI	32-lead VFQFN, Lead Free	Tray	-40°C to +85°C
8V97053LNLGI8	IDT8V97053LNLGI	32-lead VFQFN, Lead Free	Tape & Reel	-40°C to +85°C
8V97053LNLGI/W	IDT8V97053LNLGI	32-lead VFQFN, Lead Free	Tape & Reel	-40°C to +85°C

Table 19. Pin 1 Orientation in Tape and Reel Packaging

Part Number Suffix	Pin 1 Orientation	Illustration
NLGI8	Quadrant 1 (EIA-481-C)	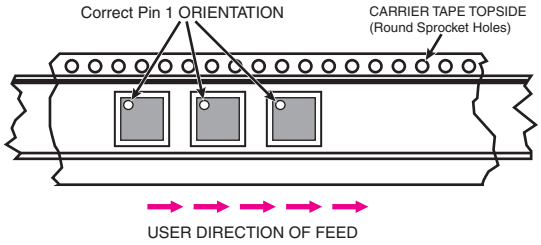
NLGI/W	Quadrant 2 (EIA-481-D)	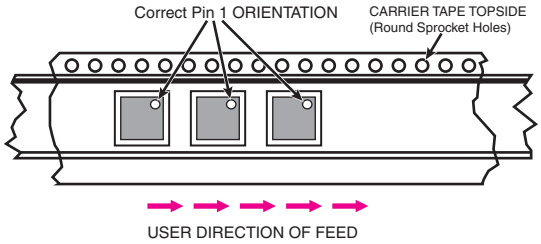

Revision History

Revision Date	Description of Change
August 9, 2018	* Changed incorrect measurement unit nF to nH in Output Matching and Schematic Example * Updated Integrated Low Noise VCO * Updated the Package Outline Drawings; however, no mechanical changes
August 18, 2016	Initial release.

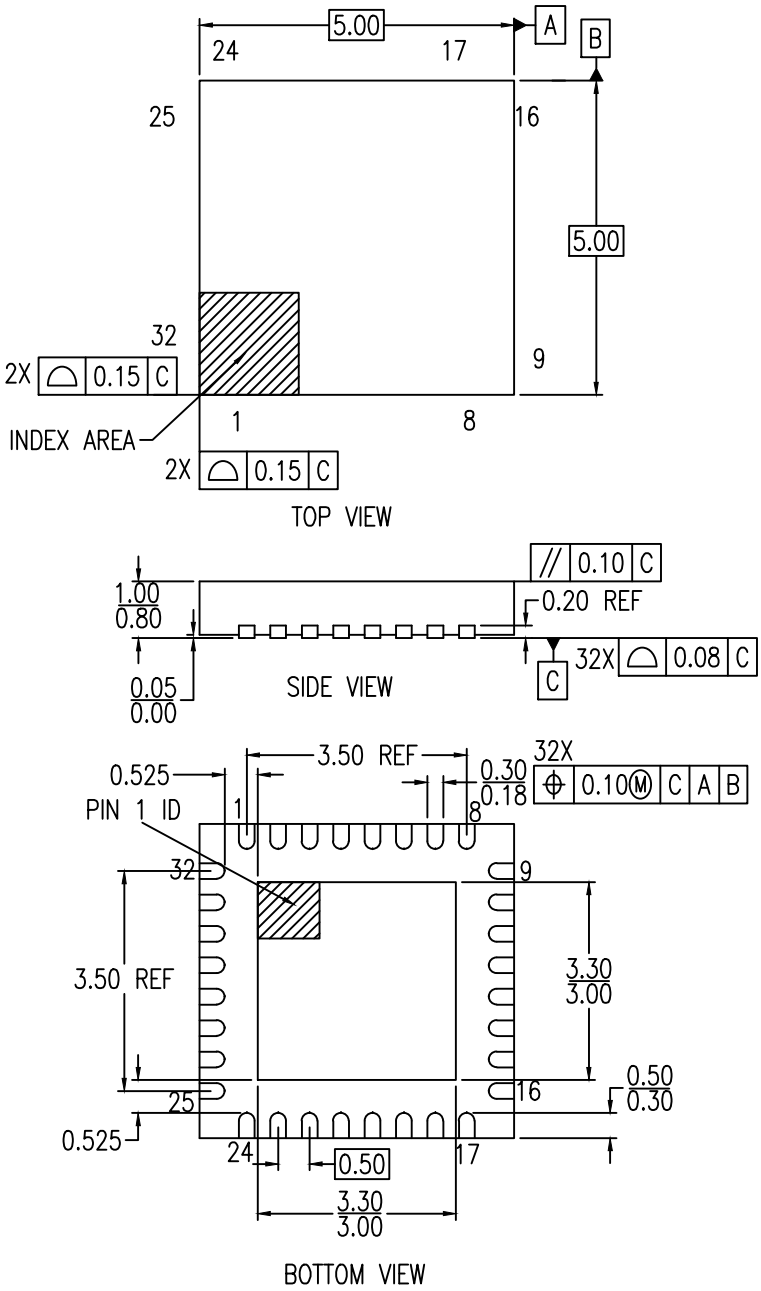

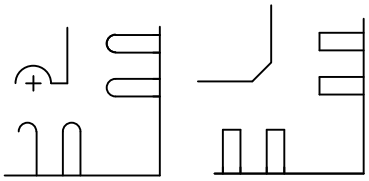

PIN #1 ID OPTION

NOTE:
1. ALL DIMENSION ARE IN MM. ANGLES IN DEGREES.
2. COPLANARITY APPLIE TO THE EXPOSED PAD AS WELL AS THE TERMINALS. COPLANARITY SHALL NOT EXCEED 0.08 MM.
3. WARPAGE SHALL NOT EXCEED 0.10 MM.
4. PIN LOCATION IS UNDENTIFIED BY EITHER CHAMFER OR NOTCH.

© Integrated Device Technology, Inc.

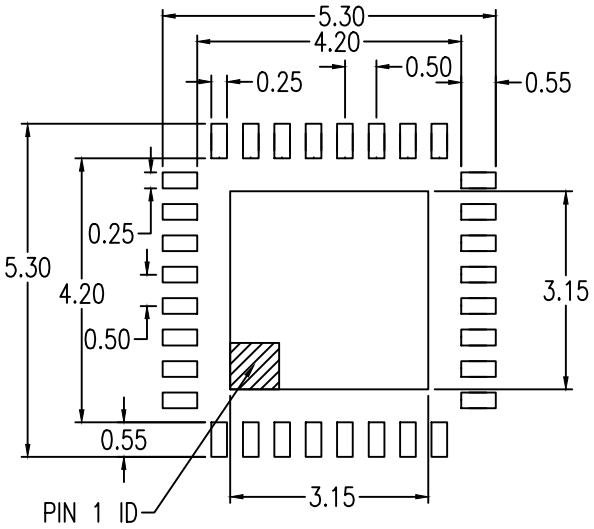

RECOMMENDED LAND PATTERN DIMENSION

1. ALL DIMENSIONS ARE IN MM. ANGLES IN DEGREES.
2. TOP DOWN VIEW. AS VIEWED ON PCB.
3. LAND PATTERN RECOMMENDATION PER IPC-7351B GENERIC REQUIREMENT FOR SURFACE MOUNT DESIGN AND LAND PATTERN.

Package Revision History		
Date Created	Rev No.	Description
April 12, 2018	Rev 02	New Format
Feb 8, 2016	Rev 01	Added "k: Value

© Integrated Device Technology, Inc.

IMPORTANT NOTICE AND DISCLAIMER

RENESAS ELECTRONICS CORPORATION AND ITS SUBSIDIARIES (“RENESAS”) PROVIDES TECHNICAL SPECIFICATIONS AND RELIABILITY DATA (INCLUDING DATASHEETS), DESIGN RESOURCES (INCLUDING REFERENCE DESIGNS), APPLICATION OR OTHER DESIGN ADVICE, WEB TOOLS, SAFETY INFORMATION, AND OTHER RESOURCES “AS IS” AND WITH ALL FAULTS, AND DISCLAIMS ALL WARRANTIES, EXPRESS OR IMPLIED, INCLUDING, WITHOUT LIMITATION, ANY IMPLIED WARRANTIES OF MERCHANTABILITY, FITNESS FOR A PARTICULAR PURPOSE, OR NON-INFRINGEMENT OF THIRD PARTY INTELLECTUAL PROPERTY RIGHTS.

These resources are intended for developers skilled in the art designing with Renesas products. You are solely responsible for (1) selecting the appropriate products for your application, (2) designing, validating, and testing your application, and (3) ensuring your application meets applicable standards, and any other safety, security, or other requirements. These resources are subject to change without notice. Renesas grants you permission to use these resources only for development of an application that uses Renesas products. Other reproduction or use of these resources is strictly prohibited. No license is granted to any other Renesas intellectual property or to any third party intellectual property. Renesas disclaims responsibility for, and you will fully indemnify Renesas and its representatives against, any claims, damages, costs, losses, or liabilities arising out of your use of these resources. Renesas' products are provided only subject to Renesas' Terms and Conditions of Sale or other applicable terms agreed to in writing. No use of any Renesas resources expands or otherwise alters any applicable warranties or warranty disclaimers for these products.

(Rev.1.0 Mar 2020)

Corporate Headquarters

TOYOSU FORESIA, 3-2-24 Toyosu,
Koto-ku, Tokyo 135-0061, Japan
www.renesas.com

Contact Information

For further information on a product, technology, the most up-to-date version of a document, or your nearest sales office, please visit:
www.renesas.com/contact/

Trademarks

Renesas and the Renesas logo are trademarks of Renesas Electronics Corporation. All trademarks and registered trademarks are the property of their respective owners.

© 2020 Renesas Electronics Corporation. All rights reserved.