RX210 Group

Renesas MCUs

R01DS0041EJ0150
Rev.1.50
Oct 18, 2013

50-MHz 32-bit RX MCUs, 78 DMIPS, up to 1-MB flash memory, 12-bit A/D, 10-bit D/A, ELC, MPC, RTC, up to 15 comms channels; incorporating functions for IEC60730 compliance

Features

■ 32-bit RX CPU core

- Max. operating frequency: 50 MHz
  Capable of 78 DMIPS in operation at 50 MHz
- Accumulator handles 64-bit results (for a single instruction) from 32- × 32-bit operations
- Multiplication and division unit handles 32- × 32-bit operations (multiplication instructions take one CPU clock cycle)
- Fast interrupt
- CISC Harvard architecture with 5-stage pipeline
- Variable-length instructions, ultra-compact code
- On-chip debugging circuit

■ Low power design and architecture

- Operation from a single 1.62-V to 5.5-V supply
- 1.62-V operation available (at up to 20 MHz)
- Deep software standby mode with RTC remaining usable
- Four low power consumption modes

■ On-chip flash memory for code, no wait states

- 50-MHz operation, 20-ns read cycle
- No wait states for reading at full CPU speed
- 64-K to 1-Mbyte capacities
- User code programmable via the SCI
- Programmable at 1.62 V
- For instructions and operands

■ On-chip data flash memory

- 8 Kbytes
  (Number of times of reprogramming: 100,000)
- Erasing and programming impose no load on the CPU.

■ On-chip SRAM, no wait states

- 12-K to 96-Kbyte size capacities

■ DMA

- DMAC: Incorporates four channels
- DTC: Four transfer modes

■ ELC

- Module operation can be initiated by event signals without going through interrupts.
- Modules can operate while the CPU is sleeping.

■ Reset and supply management

- Nine types of reset, including the power-on reset (POR)
- Low voltage detection (LVD) with voltage settings

■ Clock functions

- Frequency of external clock: Up to 20 MHz
- Frequency of the oscillator for sub-clock generation: 32.768 kHz
- PLL circuit input: 4 MHz to 12.5 MHz
- On-chip low- and high-speed oscillators, dedicated on-chip low-speed oscillator for the IWDT
- Generation of a dedicated 32.768-kHz clock for the RTC
- Clock frequency accuracy measurement circuit (CAC)

■ Realtime clock

- Adjustment functions (30 seconds, leap year, and error)
- Year and month display or 32-bit second display (binary counter) is selectable
- Time capture function
- Time capture on event-signal input through external pins
- RTC capable of initiating return from deep software standby mode

■ Independent watchdog timer

- 125-kHz on-chip oscillator produces a dedicated clock signal to drive IWDT operation.

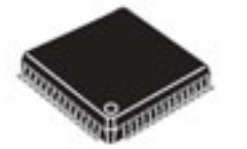

PLQP0144KA-A 20 × 20 mm, 0.5-mm pitch
PLQP0100KB-A 14 × 14 mm, 0.5-mm pitch
PLQP0080KB-A 12 × 12 mm, 0.5-mm pitch
PLQP0064KB-A 10 × 10 mm, 0.5-mm pitch
PLQP0048KB-A 7 × 7 mm, 0.5-mm pitch
PLQP0080JA-A 14 × 14 mm, 0.65-mm pitch
PLQP0064GA-A 14 × 14 mm, 0.8-mm pitch

PTLG0145KA-A 7 × 7 mm, 0.5-mm pitch
PTLG0100JA-A 7 × 7 mm, 0.65-mm pitch
PTLG0100KA-A 5.5 × 5.5 mm, 0.5-mm pitch
PTLG0064JA-A 6 × 6 mm, 0.65-mm pitch
SWBG0069LA-A 3.91 × 4.26mm, 0.40-mm pitch

■ Useful functions for IEC60730 compliance

- Self-diagnostic and disconnection-detection assistance functions for the A/D converter, clock frequency accuracy measurement circuit, independent watchdog timer, functions to assist in RAM testing, etc.

■ Up to 15 communications channels

- SCI with many useful functions (up to 13 channels)
  Asynchronous mode, clock synchronous mode, smart card interface
- I^2C bus interface: Transfer at up to 400 kbps, capable of SMBus operation (one channel)
- RSPI (one channel): Transfer at up to 16 Mbps (768-Kbyte/ 1-Mbyte flash memory or 144/145-pin products)

■ External address space

- Four CS areas (4 × 16 Mbytes)
- 8- or 16-bit bus space is selectable per area

■ Up to 20 extended-function timers

- 16-bit MTU: input capture, output compare, complementary PWM output, phase counting mode
  (six channels)
- 16-bit TPU: input capture, output capture, phase counting mode (six channels)
- 8-bit TMR (four channels)
- 16-bit compare-match timers (four channels)

■ 12-bit A/D converter

- Capable of conversion within 1 µs
- Sample-and-hold circuits (for three channels)
- Three-channel synchronized sampling available
- Self-diagnostic function and analog input disconnection detection assistance function

■ 10-bit D/A converter

■ Analog comparator

■ General I/O ports

- 5-V tolerant, open drain, input pull-up, switching of driving ability

■ MPC

- Multiple locations are selectable for I/O pins of peripheral functions

■ Temperature sensor

■ Operating temp. range

- –40°C to +85°C
- –40°C to +105°C

■ Applications

- 69WLBGA (SWBG0069LA-A): General consumer equipment
- Other than above package: General industrial and consumer equipment

1.Overview

1.1 Outline of Specifications

Table 1.1 lists the specifications in outline, and Table 1.2 gives a comparison of the functions of products in different packages.

Table 1.1 is for products with the greatest number of functions, so numbers of peripheral modules and channels will differ in accord with the package. For details, see Table 1.2, Comparison of Functions for Different Packages.

This product includes chip version A (part no.: R5F5210xAxxx), chip version B (part no.: R5F5210xBxxx), and chip version C (part no: R5F5210xCxxx).

For the specification differences between chip versions A, B, and C, see Table 1, Specification Differences Depending on Chip Versions.

Table 1.1 Outline of Specifications (1 / 5)

Classification	Module/Function	Description
CPU	CPU	• Maximum operating frequency: 50 MHz • 32-bit RX CPU • Minimum instruction execution time: One instruction per state (cycle of the system clock) • Address space: 4-Gbyte linear • Register General purpose: Sixteen 32-bit registers Control: Eight 32-bit registers Accumulator: One 64-bit register • Basic instructions: 73 • DSP instructions: 9 • Addressing modes: 10 • Data arrangement Instructions: Little endian Data: Selectable as little endian or big endian • On-chip 32-bit multiplier: 32 × 32 → 64 bits • On-chip divider: 32 / 32 → 32 bits • Barrel shifter: 32 bits
Memory	ROM	• Capacity: 64 K/96 K/128 K/256 K/384 K/512 K/768 Kbytes/1 Mbyte • 50 MHz, no-wait memory access • On-board programming: 3 types Off-board programming
	RAM	• Capacity: 12 K/16 K/20 K/32 K/64 K/96 Kbytes • 50 MHz, no-wait memory access
	E2 DataFlash	• Capacity: 8 Kbytes • Number of times for programming/erasing: 100,000
MCU operating mode		Single-chip mode, on-chip ROM enabled expansion mode, and on-chip ROM disabled expansion mode (software switching)
Clock	Clock generation circuit	• Main clock oscillator, sub-clock oscillator, low-speed on-chip oscillator, high-speed on-chip oscillator, PLL frequency synthesizer, and IWDT-dedicated on-chip oscillator • Oscillation stop detection • Measuring circuit for accuracy of clock frequency (clock-accuracy check: CAC) • Independent settings for the system clock (ICLK), peripheral module clock (PCLK), external bus clock (BCLK), and FlashIF clock (FCLK) The CPU and system sections such as other bus masters run in synchronization with the system clock (ICLK): 50 MHz (at max.) Peripheral modules run in synchronization with the peripheral module clock (PCLK): 32 MHz (at max.) Devices connected to the external bus run in synchronization with the external bus clock (BCLK): 12.5 MHz (at max.) The flash peripheral circuit runs in synchronization with the FlashIF clock (FCLK): 32 MHz (at max.)
Reset		RES# pin reset, power-on reset, voltage monitoring reset, watchdog timer reset, independent watchdog timer reset, deep software standby reset, and software reset
Voltage detection	Voltage detection circuit (LVDAa)	• When the voltage on VCC falls below the voltage detection level, an internal reset or internal interrupt is generated. Voltage detection circuit 0 is capable of selecting the detection voltage from 4 levels Voltage detection circuit 1 is capable of selecting the detection voltage from 16 levels Voltage detection circuit 2 is capable of selecting the detection voltage from 16 levels

Table 1.1 Outline of Specifications (2 / 5)

Classification	Module/Function	Description
Low power consumption	Low power consumption facilities	• Module stop function • Four low power consumption modes Sleep mode, all-module clock stop mode, software standby mode, and deep software standby mode
	Function for lower operating power consumption	• Operating power control modes [Chip versions A and C] High-speed operating mode, middle-speed operating mode 1A, middle-speed operating mode 1B, low-speed operating mode 1, low-speed operating mode 2 [Chip version B] High-speed operating mode, middle-speed operating mode 1A, middle-speed operating mode 1B, middle-speed operating mode 2A, middle-speed operating mode 2B, low-speed operating mode 1, low-speed operating mode 2
Interrupt	Interrupt controller (ICUb)	• Interrupt vectors: 167 • External interrupts: 9 (NMI, IRQ0 to IRQ7 pins) • Non-maskable interrupts: 6 (the NMI pin, oscillation stop detection interrupt, voltage monitoring 1 interrupt, voltage monitoring 2 interrupt, WDT interrupt, and IWDT interrupt) • 16 levels specifiable for the order of priority
External bus extension		• The external address space can be divided into four areas (CS0 to CS3), each with independent control of access settings. Capacity of each area: 16 Mbytes (CS0 to CS3) A chip-select signal (CS0# to CS3#) can be output for each area. Each area is specifiable as an 8-bit or 16-bit bus space The data arrangement in each area is selectable as little or big endian (only for data). Bus format: Separate bus, multiplex bus • Wait control • Write buffer facility
DMA	DMA controller (DMACA)	• 4 channels • Three transfer modes: Normal transfer, repeat transfer, and block transfer • Activation sources: Software trigger, external interrupts, and interrupt requests from peripheral functions
	Data transfer controller (DTCa)	• Three transfer modes: Normal transfer, repeat transfer, and block transfer • Activation sources: Interrupts • Chain transfer function
I/O ports	General I/O ports	145-pin/144-pin/100-pin/80-pin/69-pin/64-pin/48-pin • I/O: 122/122/84/64/48/48/34 • Input: 1/1/1/1/1/1/1 • Pull-up resistors: 122/122/84/64/48/48/34 • Open-drain outputs: 76/76/54/44/35/35/26 • 5-V tolerance:4/4/4/4/2/2*1/2
Event link controller (ELC)		• Event signals of 59 types can be directly connected to the module • Operations of timer modules are selectable at event input • Capable of event link operation for ports B and E
Multi-function pin controller (MPC)		• Capable of selecting input/output function from multiple pins

Table 1.1 Outline of Specifications (3 / 5)

Classification	Module/Function	Description
Timers	16-bit timer pulse unit (TPUa)	• (16 bits × 6 channels) × 1 unit • Maximum of 16 pulse-input/output possible • Select from among seven or eight counter-input clock signals for each channel • Supports the input capture/output compare function • Output of PWM waveforms in up to 15 phases in PWM mode • Support for buffered operation, phase-counting mode (two-phase encoder input) and cascade-connected operation (32 bits × 2 channels) depending on the channel. • Capable of generating conversion start triggers for the A/D converters • Signals from the input capture pins are input via a digital filter • Clock frequency measuring method (Products with 144 or more pins incorporate a TPU.)
	Multi-function timer pulse unit 2 (MTU2a)	• (16 bits × 6 channels) × 1 unit • Up to 16 pulse-input/output lines and three pulse-input lines are available with six 16-bit timer channels • Select from among eight or seven counter-input clock signals for each channel (PCLK/1, PCLK/4, PCLK/16, PCLK/64, PCLK/256, PCLK/1024, MTCLKA, MTCLKB, MTCLKC, MTCLKD) other than channel 5, for which only four signals are available. • Input capture function • 21 output compare/input capture registers • Pulse output mode • Complementary PWM output mode • Reset synchronous PWM mode • Phase-counting mode • Generation of triggers for A/D converter conversion
	Port output enable 2 (POE2a)	Controls the high-impedance state of the MTU's waveform output pins
	8-bit timer (TMR)	• (8 bits × 2 channels) × 2 units • Select from among seven internal clock signals (PCLK1, PCLK/2, PCLK/8, PCLK/32, PCLK/64, PCLK/1024, PCLK/8192) and one external clock signal • Capable of output of pulse trains with desired duty cycles or of PWM signals • The 2 channels of each unit can be cascaded to create a 16-bit timer • Capable of generating baud-rate clocks for SCI5, SCI6, and SCI12
	Compare match timer (CMT)	• (16 bits × 2 channels) × 2 units • Select from among four clock signals (PCLK/8, PCLK/32, PCLK/128, PCLK/512)
	Watchdog timer (WDTA)	• 14 bits × 1 channel • Select from among six counter-input clock signals (PCLK/4, PCLK/64, PCLK/128, PCLK/512, PCLK/2048, PCLK/8192)
	Independent watchdog timer (IWDTa)	• 14 bits × 1 channel • Counter-input clock: IWDT-dedicated on-chip oscillator Frequency divided by 1, 16, 32, 64, 128, or 256
	Realtime clock (RTCb)	• Clock source: Sub-clock • Time/calendar • Interrupt sources: Alarm interrupt, periodic interrupt, and carry interrupt • Time-capture facility for three values

Table 1.1 Outline of Specifications (4 / 5)

Classification	Module/Function	Description
Communication functions	Serial communications interfaces (SCIc, SCId)	• 13 channels (channel 0 to 11: SCIc, channel 12: SCId) • Serial communications modes: Asynchronous, clock synchronous, and smart-card interface • On-chip baud rate generator allows selection of the desired bit rate • Choice of LSB-first or MSB-first transfer • Average transfer rate clock can be input from TMR timers (SCI5, SCI6, and SCI12) • Simple IIC • Simple SPI • Master/slave mode supported (SCId only) • Start frame and information frame are included (SCId only)
	I^2C bus interface (RIIC)	• 1 channel • Communications formats: I^2C bus format/SMBus format • Master/slave selectable • Supports the fast mode
	Serial peripheral interface (RSPI)	• 1 channel • Transfer facility Using the MOSI (master out, slave in), MISO (master in, slave out), SSL (slave select), and RSPI clock (RSPCK) signals enables serial transfer through SPI operation (four lines) or clock-synchronous operation (three lines) • Capable of handling serial transfer as a master or slave • Data formats • Choice of LSB-first or MSB-first transfer The number of bits in each transfer can be changed to any number of bits from 8 to 16, 20, 24, or 32 bits. 128-bit buffers for transmission and reception Up to four frames can be transmitted or received in a single transfer operation (with each frame having up to 32 bits) • Double buffers for both transmission and reception
12-bit A/D converter (S12ADb)		• 12 bits (16 channels × 1 unit) • 12-bit resolution • Minimum conversion time: 1.0 μs per channel (in operation with ADCLK at 50 MHz) • Operating modes Scan mode (single scan mode, continuous scan mode, and group scan mode) • Sample-and-hold function • Self-diagnosis for the A/D converter • Assistance in detecting disconnected analog inputs • Double-trigger mode (duplication of A/D conversion data) • A/D conversion start conditions A software trigger, a trigger from a timer (MTU), an external trigger signal, or ELC
Temperature sensor (TEMPSa)		• Outputs the voltage that changes depending on the temperature • PGA gain switchable: Four levels according to the voltage range
D/A converter (DA)		• 2 channels • 10-bit resolution • Output voltage: 0 V to VREFH
CRC calculator (CRC)		• CRC code generation for arbitrary amounts of data in 8-bit units • Select any of three generating polynomials: $X^8 + X^2 + X + 1$, $X^{16} + X^{15} + X^2 + 1$, or $X^{16} + X^{12} + X^5 + 1$ • Generation of CRC codes for use with LSB-first or MSB-first communications is selectable.
Comparator A (CMPA)		• 2 channels • Comparison of reference voltage and analog input voltage
Comparator B (CMPB)		• 2 channels • Comparison of reference voltage and analog input voltage
Data Operation Circuit (DOC)		Comparison, addition, and subtraction of 16-bit data
Power supply voltage/Operating frequency		VCC = 1.62 to 1.8 V: 20 MHz, VCC = 1.8 to 2.7 V: 32 MHz, VCC = 2.7 to 5.5 V: 50 MHz
Operating temperature		D version: −40 to +85°C, G version: −40 to +105°C*2

Table 1.1 Outline of Specifications (5 / 5)

Classification	Module/Function	Description
Packages	Chip version A	100-pin TFLGA (PTLG0100JA-A) 7 × 7 mm, 0.65-mm pitch 100-pin LQFP (PLQP0100KB-A) 14 × 14 mm, 0.5-mm pitch 80-pin LQFP (PLQP0080KB-A) 12 × 12 mm, 0.5-mm pitch 64-pin LQFP (PLQP0064KB-A) 10 × 10 mm, 0.5-mm pitch
	Chip version B	145-pin TFLGA (PTLG0145KA-A) 7 × 7 mm, 0.5-mm pitch 100-pin TFLGA (PTLG0100JA-A) 7 × 7 mm, 0.65-mm pitch 100-pin TFLGA (PTLG0100KA-A) 5.5 × 5.5 mm, 0.5-mm pitch 64-pin TFLGA (PTLG0064JA-A) 6 × 6 mm, 0.65-mm pitch 144-pin LQFP (PLQP0144KA-A) 20 × 20 mm, 0.5-mm pitch 100-pin LQFP (PLQP0100KB-A) 14 × 14 mm, 0.5-mm pitch 80-pin LQFP (PLQP0080KB-A) 12 × 12 mm, 0.5-mm pitch 80-pin LQFP (PLQP0080JA-A) 14 × 14 mm, 0.65-mm pitch 64-pin LQFP (PLQP0064KB-A) 10 × 10 mm, 0.5-mm pitch 64-pin LQFP (PLQP0064GA-A) 14 × 14 mm, 0.8-mm pitch 48-pin LQFP (PLQP0048KB-A) 7 × 7 mm, 0.5-mm pitch 69-pin WLBGA (SWBG0069LA-A) 3.91 × 4.26mm, 0.40-mm pitch
	Chip version C	100-pin TFLGA (PTLG0100JA-A) 7 × 7 mm, 0.65-mm pitch 100-pin LQFP (PLQP0100KB-A) 14 × 14 mm, 0.5-mm pitch 80-pin LQFP (PLQP0080KB-A) 12 × 12 mm, 0.5-mm pitch 80-pin LQFP (PLQP0080JA-A) 14 × 14 mm, 0.65-mm pitch 64-pin LQFP (PLQP0064KB-A) 10 × 10 mm, 0.5-mm pitch 64-pin LQFP (PLQP0064GA-A) 14 × 14 mm, 0.8-mm pitch
On-chip debugging system		E1 emulator (FINE interface)

Note 1. In chip version A of the part numbers below, port P17 is not 5 V tolerant. Therefore there is only one port in these products. R5F52108ADFM, R5F52107ADFM, R5F52106ADFM, and R5F52105ADFM

Note 2. Please contact Renesas Electronics sales office for derating of operation under Ta = +85°C to +105°C. Derating is the systematic reduction of load for the sake of improved reliability.

Table 1.2 Comparison of Functions for Different Packages

Module/Functions		RX210 Group				
		144, 145 Pins	**100 Pins**	**80 Pins**	**64, 69 Pins**	**48 Pins**
External bus	External bus width	16 bits		Not supported		
Interrupt	External interrupts	NMI, IRQ0 to IRQ7			NMI, IRQ0 to IRQ2, IRQ4 to IRQ7	NMI, IRQ0, IRQ1, IRQ4 to IRQ7
DMA	DMA controller	4 channels (DMAC0 to DMAC3)				
	Data transfer controller	Supported				
Timers	16-bit timer pulse unit	6 channels (TPU0 to TPU5)	Not supported			
	Multi-function timer pulse unit 2	6 channels (MTU0 to MTU5)				
	Port output enable 2	POE0# to POE3#, POE8#				
	8-bit timer	2 channels × 2 units				
	Compare match timer	2 channels × 2 units				
	Realtime clock	Supported				Not supported
	Watchdog timer	Supported				
	Independent watchdog timer	Supported				
Communication functions	Serial communications interface (SCIc)	12 channels (SCI0 to 11)	6 channels (SCI0, 1, 5, 6, 8, 9)		5 channels (SCI1, 5, 6, 8, 9)	4 channels (SCI1, 5, 6, 8)
	Serial communications interface (SCId)	1 channel (SCI12)				
	I^2C bus interface	1 channel				
	Serial peripheral interface	1 channel				
12-bit A/D converter		16 channels (AN000 to AN015)		14 channels (AN000 to AN013)	12 channels (AN000 to AN004, AN006, AN008 to AN013)	8 channels (AN000 to AN002, AN006, AN009 to AN012)
Temperature sensor		Supported				
D/A converter		2 channels				Not supported
CRC calculator		Supported				
Event link controller		Supported				
Comparator A		2 channels				
Comparator B		2 channels				
Packages		145-pin TFLGA 144-pin LQFP	100-pin TFLGA 100-pin LQFP	80-pin LQFP	69-pin WLBGA 64-pin TFLGA 64-pin LQFP	48-pin LQFP

1.2 List of Products

Table 1.3 to Table 1.7 are a list of products, and Figure 1.1 shows how to read the product part no., memory capacity, and package type.

Table 1.3 List of Products Chip Version A: D Version (Ta = –40 to +85°C)

Group	Part No.	Orderable Part No.	Package	ROM Capacity	RAM Capacity	E2 DataFlash	Operating Frequency (Max.)	Operating Temperature
RX210	R5F52108ADFP	R5F52108ADFP#V0	PLQP0100KB-A	512 Kbytes	64 Kbytes	8 Kbytes	50 MHz	–40 to +85°C
	R5F52108ADFN	R5F52108ADFN#V0	PLQP0080KB-A					
	R5F52108ADFM	R5F52108ADFM#V0	PLQP0064KB-A					
	R5F52108ADLJ	R5F52108ADLJ#U0	PTLG0100JA-A					
	R5F52107ADFP	R5F52107ADFP#V0	PLQP0100KB-A	384 Kbytes				
	R5F52107ADFN	R5F52107ADFN#V0	PLQP0080KB-A					
	R5F52107ADFM	R5F52107ADFM#V0	PLQP0064KB-A					
	R5F52107ADLJ	R5F52107ADLJ#U0	PTLG0100JA-A					
	R5F52106ADFP	R5F52106ADFP#V0	PLQP0100KB-A	256 Kbytes	32 Kbytes			
	R5F52106ADFN	R5F52106ADFN#V0	PLQP0080KB-A					
	R5F52106ADFM	R5F52106ADFM#V0	PLQP0064KB-A					
	R5F52106ADLJ	R5F52106ADLJ#U0	PTLG0100JA-A					
	R5F52105ADFP	R5F52105ADFP#V0	PLQP0100KB-A	128 Kbytes	20 Kbytes			
	R5F52105ADFN	R5F52105ADFN#V0	PLQP0080KB-A					
	R5F52105ADFM	R5F52105ADFM#V0	PLQP0064KB-A					
	R5F52105ADLJ	R5F52105ADLJ#U0	PTLG0100JA-A					

Note: • Orderable part numbers are current as of when this manual was published. Please make sure to refer to the relevant product page on the Renesas website for the latest part numbers.

Table 1.4 List of Products Chip Version B: D Version (Ta = –40 to +85°C)

Group	Part No.	Orderable Part No.	Package	ROM Capacity	RAM Capacity	E2 DataFlash	Operating Frequency (Max.)	Operating Temperature
RX210	R5F5210BBDFB	R5F5210BBDFB#30	PLQP0144KA-A	1 Mbytes	96 Kbytes	8 Kbytes	50 MHz	–40 to +85°C
	R5F5210BBDLK	R5F5210BBDLK#U0	PTLG0145KA-A					
	R5F5210BBDFP	R5F5210BBDFP#30	PLQP0100KB-A					
	R5F5210BBDLJ	R5F5210BBDLJ#U0	PTLG0100JA-A					
	R5F5210ABDFB	R5F5210ABDFB#30	PLQP0144KA-A	768 Kbytes				
	R5F5210ABDLK	R5F5210ABDLK#U0	PTLG0145KA-A					
	R5F5210ABDFP	R5F5210ABDFP#30	PLQP0100KB-A					
	R5F5210ABDLJ	R5F5210ABDLJ#U0	PTLG0100JA-A					
	R5F52108BDFB	R5F52108BDFB#30	PLQP0144KA-A	512 Kbytes	64 Kbytes			
	R5F52108BDLK	R5F52108BDLK#U0	PTLG0145KA-A					
	R5F52107BDFB	R5F52107BDFB#30	PLQP0144KA-A	384 Kbytes				
	R5F52107BDLK	R5F52107BDLK#U0	PTLG0145KA-A					
	R5F52106BDFB	R5F52106BDFB#30	PLQP0144KA-A	256 Kbytes	32 Kbytes			
	R5F52106BDLK	R5F52106BDLK#U0	PTLG0145KA-A					
	R5F52106BDFP	R5F52106BDFP#30	PLQP0100KB-A					
	R5F52106BDFN	R5F52106BDFN#30	PLQP0080KB-A					
	R5F52106BDFM	R5F52106BDFM#30	PLQP0064KB-A					
	R5F52106BDFL	R5F52106BDFL#30	PLQP0048KB-A					
	R5F52106BDLJ	R5F52106BDLJ#U0	PTLG0100JA-A					
	R5F52106BDLA	R5F52106BDLA#U0	PTLG0100KA-A					
	R5F52106BDFF	R5F52106BDFF#V0	PLQP0080JA-A					
	R5F52106BDFK	R5F52106BDFK#30	PLQP0064GA-A					
	R5F52106BDLH	R5F52106BDLH#U0	PTLG0064JA-A					
	R5F52106BDBM *1	R5F52106BDBM#W0 *1	SWBG0069LA-A					
	R5F52105BDFB	R5F52105BDFB#30	PLQP0144KA-A	128 Kbytes	20 Kbytes			
	R5F52105BDLK	R5F52105BDLK#U0	PTLG0145KA-A					
	R5F52105BDFP	R5F52105BDFP#30	PLQP0100KB-A					
	R5F52105BDFN	R5F52105BDFN#30	PLQP0080KB-A					
	R5F52105BDFM	R5F52105BDFM#30	PLQP0064KB-A					
	R5F52105BDFL	R5F52105BDFL#30	PLQP0048KB-A					
	R5F52105BDLJ	R5F52105BDLJ#U0	PTLG0100JA-A					
	R5F52105BDLA	R5F52105BDLA#U0	PTLG0100KA-A					
	R5F52105BDFF	R5F52105BDFF#V0	PLQP0080JA-A					
	R5F52105BDFK	R5F52105BDFK#30	PLQP0064GA-A					
	R5F52105BDLH	R5F52105BDLH#U0	PTLG0064JA-A					
	R5F52105BDBM *1	R5F52105BDBM#W0 *1	SWBG0069LA-A					
	R5F52104BDFM	R5F52104BDFM#30	PLQP0064KB-A	96 Kbytes	16 Kbytes			
	R5F52104BDFL	R5F52104BDFL#30	PLQP0048KB-A					
	R5F52104BDFF	R5F52104BDFF#V0	PLQP0080JA-A					
	R5F52104BDLH	R5F52104BDLH#U0	PTLG0064JA-A					
	R5F52103BDFM	R5F52103BDFM#30	PLQP0064KB-A	64 Kbytes	12 Kbytes			
	R5F52103BDFL	R5F52103BDFL#30	PLQP0048KB-A					
	R5F52103BDFF	R5F52103BDFF#V0	PLQP0080JA-A					
	R5F52103BDLH	R5F52103BDLH#U0	PTLG0064JA-A					

Note: • Orderable part numbers are current as of when this manual was published. Please make sure to refer to the relevant product page on the Renesas website for the latest part numbers.

Note 1. These products are available for general consumer equipment only.

Table 1.5 List of Products Chip Version B: G Version (Ta = –40 to +105°C)

Group	Part No.	Orderable Part No.	Package	ROM Capacity	RAM Capacity	E2 DataFlash	Operating Frequency (Max.)	Operating Temperature
RX210	R5F5210BBGFB	R5F5210BBGFB#30	PLQP0144KA-A	1 Mbytes	96 Kbytes	8 Kbytes	50 MHz	–40 to +105°C
	R5F5210BBGFP	R5F5210BBGFP#30	PLQP0100KB-A					
	R5F5210ABGFB	R5F5210ABGFB#30	PLQP0144KA-A	768 Kbytes				
	R5F5210ABGFP	R5F5210ABGFP#30	PLQP0100KB-A					
	R5F52108BGFB	R5F52108BGFB#30	PLQP0144KA-A	512 Kbytes	64 Kbytes			
	R5F52107BGFB	R5F52107BGFB#30	PLQP0144KA-A	384 Kbytes				
	R5F52106BGFB	R5F52106BGFB#30	PLQP0144KA-A	256 Kbytes	32 Kbytes			
	R5F52106BGFP	R5F52106BGFP#30	PLQP0100KB-A					
	R5F52106BGFN	R5F52106BGFN#30	PLQP0080KB-A					
	R5F52106BGFM	R5F52106BGFM#30	PLQP0064KB-A					
	R5F52106BGFL	R5F52106BGFL#30	PLQP0048KB-A					
	R5F52106BGFF	R5F52106BGFF#V0	PTLG0100JA-A					
	R5F52106BGFK	R5F52106BGFK#30	PLQP0064GA-A					
	R5F52105BGFB	R5F52105BGFB#30	PLQP0144KA-A	128 Kbytes	20 Kbytes			
	R5F52105BGFP	R5F52105BGFP#30	PLQP0100KB-A					
	R5F52105BGFN	R5F52105BGFN#30	PLQP0080KB-A					
	R5F52105BGFM	R5F52105BGFM#30	PLQP0064KB-A					
	R5F52105BGFL	R5F52105BGFL#30	PLQP0048KB-A					
	R5F52105BGFF	R5F52105BGFF#V0	PLQP0080JA-A					
	R5F52105BGFK	R5F52105BGFK#30	PLQP0064GA-A					
	R5F52104BGFM	R5F52104BGFM#30	PLQP0064KB-A	96 Kbytes	16 Kbytes			
	R5F52104BGFL	R5F52104BGFL#30	PLQP0048KB-A					
	R5F52104BGFF	R5F52104BGFF#V0	PLQP0080JA-A					
	R5F52103BGFM	R5F52103BGFM#30	PLQP0064KB-A	64 Kbytes	12 Kbytes			
	R5F52103BGFL	R5F52103BGFL#30	PLQP0048KB-A					
	R5F52103BGFF	R5F52103BGFF#V0	PLQP0080JA-A					

Note: • Please contact Renesas Electronics sales office for derating of operation under Ta = +85°C to +105°C. Derating is the systematic reduction of load for the sake of improved reliability.

Note: • Orderable part numbers are current as of when this manual was published. Please make sure to refer to the relevant product page on the Renesas website for the latest part numbers.

Table 1.6 List of Products Chip Version C: D Version (Ta = –40 to +85°C)

Group	Part No.	Orderable Part No.	Package	ROM Capacity	RAM Capacity	E2 DataFlash	Operating Frequency (Max.)	Operating Temperature
RX210	R5F52108CDFP	R5F52108CDFP#30	PLQP0100KB-A	512 Kbytes	64 Kbytes	8 Kbytes	50 MHz	–40 to +85°C
	R5F52108CDFN	R5F52108CDFN#30	PLQP0080KB-A					
	R5F52108CDFM	R5F52108CDFM#30	PLQP0064KB-A					
	R5F52108CDLJ	R5F52108CDLJ#U0	PTLG0100JA-A					
	R5F52108CDFF	R5F52108CDFF#V0	PLQP0080JA-A					
	R5F52108CDFK	R5F52108CDFK#30	PLQP0064GA-A					
	R5F52107CDFP	R5F52107CDFP#30	PLQP0100KB-A	384 Kbytes				
	R5F52107CDFN	R5F52107CDFN#30	PLQP0080KB-A					
	R5F52107CDFM	R5F52107CDFM#30	PLQP0064KB-A					
	R5F52107CDLJ	R5F52107CDLJ#U0	PTLG0100JA-A					
	R5F52107CDFF	R5F52107CDFF#V0	PLQP0080JA-A					
	R5F52107CDFK	R5F52107CDFK#30	PLQP0064GA-A					

Note: • Orderable part numbers are current as of when this manual was published. Please make sure to refer to the relevant product page on the Renesas website for the latest part numbers.

Table 1.7 List of Products Chip Version C: G Version (Ta = –40 to +105°C)

Group	Part No.	Orderable Part No.	Package	ROM Capacity	RAM Capacity	E2 DataFlash	Operating Frequency (Max.)	Operating Temperature
RX210	R5F52108CGFP	R5F52108CGFP#30	PLQP0100KB-A	512 Kbytes	64 Kbytes	8 Kbytes	50 MHz	–40 to +105°C
	R5F52108CGFN	R5F52108CGFN#30	PLQP0080KB-A					
	R5F52108CGFM	R5F52108CGFM#30	PLQP0064KB-A					
	R5F52108CGFF	R5F52108CGFF#V0	PLQP0080JA-A					
	R5F52108CGFK	R5F52108CGFK#30	PLQP0064GA-A					
	R5F52107CGFP	R5F52107CGFP#30	PLQP0100KB-A	384 Kbytes				
	R5F52107CGFN	R5F52107CGFN#30	PLQP0080KB-A					
	R5F52107CGFM	R5F52107CGFM#30	PLQP0064KB-A					
	R5F52107CGFF	R5F52107CGFF#V0	PLQP0080JA-A					
	R5F52107CGFK	R5F52107CGFK#30	PLQP0064GA-A					

Note: • Please contact Renesas Electronics sales office for derating of operation under Ta = +85°C to +105°C. Derating is the systematic reduction of load for the sake of improved reliability.

Note: • Orderable part numbers are current as of when this manual was published. Please make sure to refer to the relevant product page on the Renesas website for the latest part numbers.

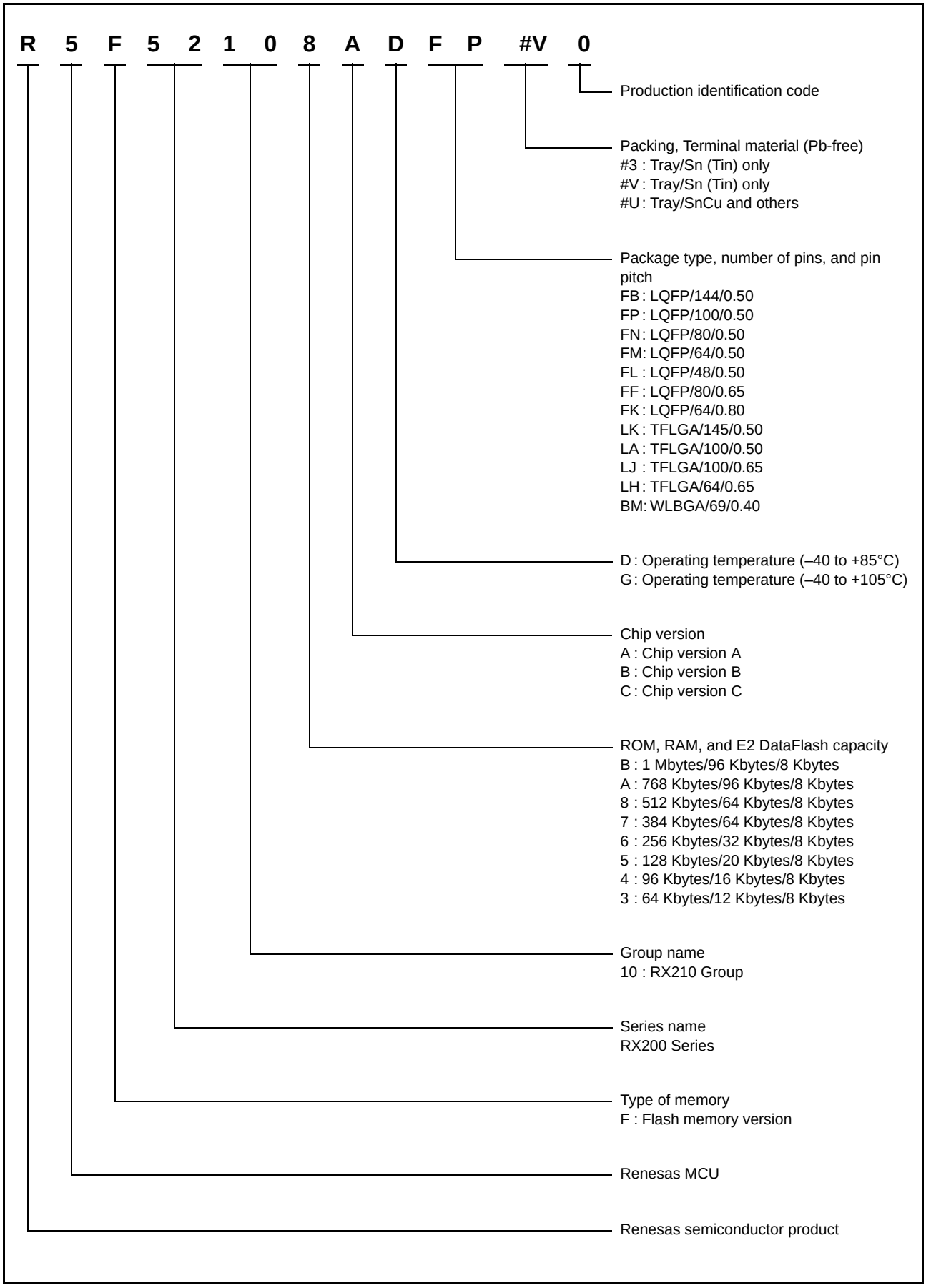

Figure 1.1 How to Read the Product Part No., Memory Capacity, and Package Type

1.3 Block Diagram

Figure 1.2 shows a block diagram.

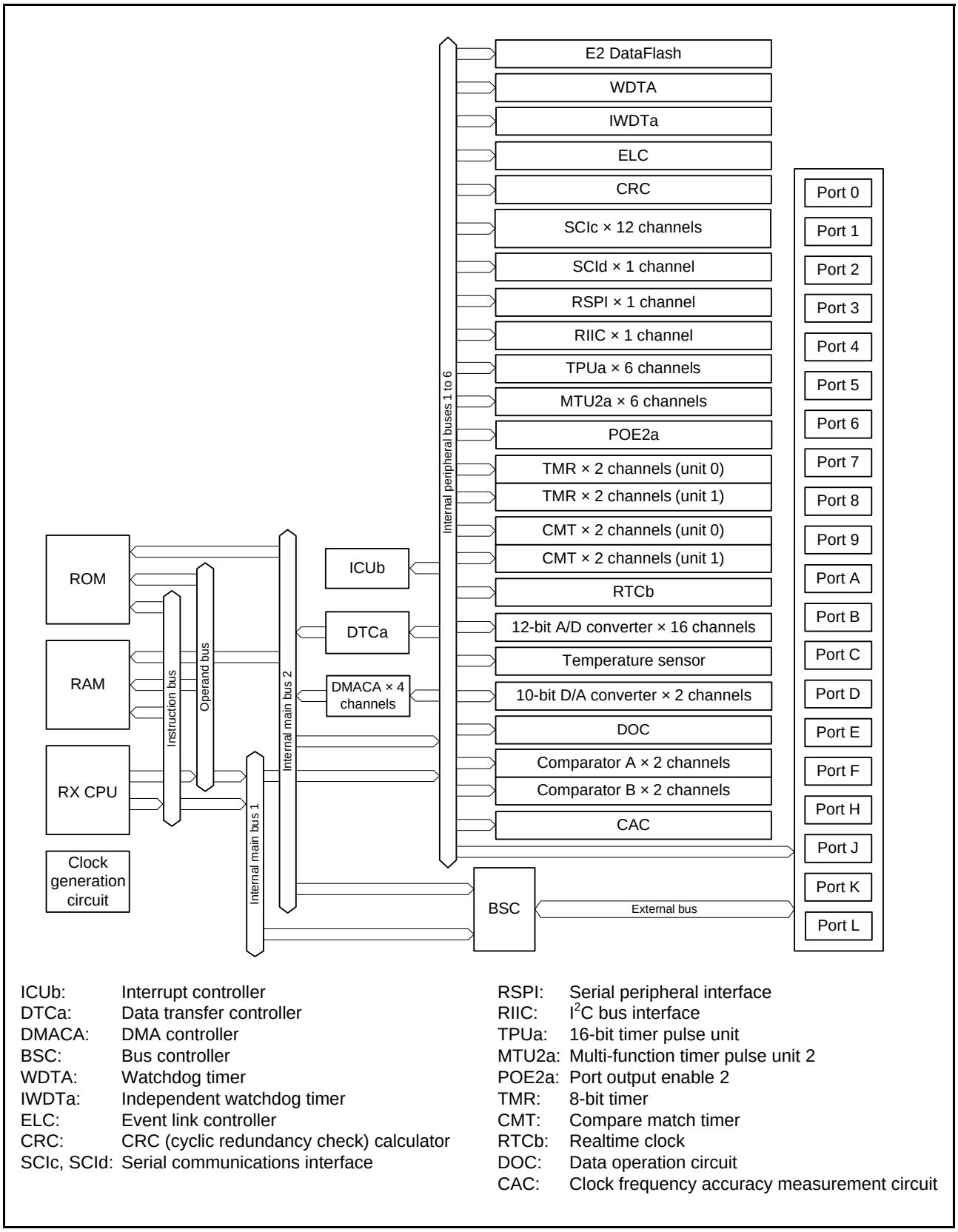

ICUb:	Interrupt controller	RSPI:	Serial peripheral interface
DTCa:	Data transfer controller	RIIC:	I^2C bus interface
DMACA:	DMA controller	TPUa:	16-bit timer pulse unit
BSC:	Bus controller	MTU2a:	Multi-function timer pulse unit 2
WDTA:	Watchdog timer	POE2a:	Port output enable 2
IWDTa:	Independent watchdog timer	TMR:	8-bit timer
ELC:	Event link controller	CMT:	Compare match timer
CRC:	CRC (cyclic redundancy check) calculator	RTCb:	Realtime clock
SCIc, SCId:	Serial communications interface	DOC:	Data operation circuit
		CAC:	Clock frequency accuracy measurement circuit

Figure 1.2 Block Diagram

1.4 Pin Functions

Table 1.8 lists the pin functions.

Table 1.8 Pin Functions (1 / 4)

Classifications	Pin Name	I/O	Description
Power supply	VCC	Input	Power supply pin. Connect it to the system power supply.
	VCL	—	Connect this pin to the VSS pin via the 0.1 μF smoothing capacitor used to stabilize the internal power supply. Place the capacitor close to the pin.
	VSS	Input	Ground pin. Connect it to the system power supply (0 V).
Clock	XTAL	Output	Pins for connecting a crystal resonator. An external clock signal can be input through the EXTAL pin.
	EXTAL	Input	
	BCLK	Output	Outputs the external bus clock for external devices.
	XCIN	Input	Input/output pins for the sub-clock oscillator. Connect a crystal resonator between XCIN and XCOUT.
	XCOUT	Output	
Operating mode control	MD	Input	Pin for setting the operating mode. The signal levels on this pin must not be changed during operation.
System control	RES#	Input	Reset pin. This LSI enters the reset state when this signal goes low.
CAC	CACREF	Input	Input pin for the clock frequency accuracy measurement circuit.
On-chip emulator	FINED	I/O	FINE interface pin.
Address bus	A0 to A23	Output	Output pins for the address.
Data bus	D0 to D15	I/O	Input and output pins for the bidirectional data bus.
Multiplexed bus	A0/D0 to A15/D15	I/O	Address/data multiplexed bus
Bus control	RD#	Output	Strobe signal which indicates that reading from the external bus interface space is in progress.
	WR#	Output	Strobe signal which indicates that writing to the external bus interface space is in progress, in single-write strobe mode.
	WR0#, WR1#	Output	Strobe signals which indicate that either group of data bus pins (D7 to D0, and D15 to D8) is valid in writing to the external bus interface space, in byte strobe mode.
	BC0#, BC1#	Output	Strobe signals which indicate that either group of data bus pins (D7 to D0 and D15 to D8) is valid in access to the external bus interface space, in single-write strobe mode.
	CS0# to CS3#	Output	Select signals for areas 0 to 3.
	WAIT#	Input	Input pin for wait request signals in access to the external space.
	ALE	Output	Address latch signal when address/data multiplexed bus is selected.
Interrupt	NMI	Input	Non-maskable interrupt request pin.
	IRQ0 to IRQ7	Input	Interrupt request pins.

Table 1.8 Pin Functions (2 / 4)

Classifications	Pin Name	I/O	Description
16-bit timer pulse unit	TIOCA0, TIOCB0 TIOCC0, TIOCD0	I/O	The TGRA0 to TGRD0 input capture input/output compare output/ PWM output pins.
	TIOCA1, TIOCB1	I/O	The TGRA1 and TGRB1 input capture input/output compare output/ PWM output pins.
	TIOCA2, TIOCB2	I/O	The TGRA2 and TGRB2 input capture input/output compare output/ PWM output pins.
	TIOCA3, TIOCB3 TIOCC3, TIOCD3	I/O	The TGRA3 to TGRD3 input capture input/output compare output/ PWM output pins.
	TIOCA4, TIOCB4	I/O	The TGRA4 and TGRB4 input capture input/output compare output/ PWM output pins.
	TIOCA5, TIOCB5	I/O	The TGRA5 and TGRB5 input capture input/output compare output/ PWM output pins.
	TCLKA, TCLKB TCLKC, TCLKD	Input	Input pins for external clock signals.
Multi-function timer pulse unit 2	MTIOC0A, MTIOC0B MTIOC0C, MTIOC0D	I/O	The TGRA0 to TGRD0 input capture input/output compare output/ PWM output pins.
	MTIOC1A, MTIOC1B	I/O	The TGRA1 and TGRB1 input capture input/output compare output/ PWM output pins.
	MTIOC2A, MTIOC2B	I/O	The TGRA2 and TGRB2 input capture input/output compare output/ PWM output pins.
	MTIOC3A, MTIOC3B MTIOC3C, MTIOC3D	I/O	The TGRA3 to TGRD3 input capture input/output compare output/ PWM output pins.
	MTIOC4A, MTIOC4B MTIOC4C, MTIOC4D	I/O	The TGRA4 to TGRD4 input capture input/output compare output/ PWM output pins.
	MTIC5U, MTIC5V, MTIC5W	Input	The TGRU5, TGRV5, and TGRW5 input capture input/external pulse input pins.
	MTCLKA, MTCLKB, MTCLKC, MTCLKD	Input	Input pins for the external clock.
Port output enable 2	POE0# to POE3#, POE8#	Input	Input pins for request signals to place the MTU pins in the high impedance state.
8-bit timer	TMO0 to TMO3	Output	Compare match output pins.
	TMCI0 to TMCI3	Input	Input pins for external clocks to be input to the counter.
	TMRI0 to TMRI3	Input	Input pins for the counter reset.
Realtime clock	RTCOUT	Output	Output pin for 1-Hz clock.
	RTCIC0 to RTCIC2	Input	Time capture event input pins.
Serial communications interface (SCIc)	• Asynchronous mode/clock synchronous mode		
	SCK0 to SCK11	I/O	Input/output pins for the clock
	RXD0 to RXD11	Input	Input pins for received data
	TXD0 to TXD11	Output	Output pins for transmitted data
	CTS0# to CTS11#	Input	Input pins for controlling the start of transmission and reception
	RTS0# to RTS11#	Output	Output pins for controlling the start of transmission and reception
	• Simple I^2C mode		
	SSCL0 to SSCL11	I/O	Input/output pins for the I^2C clock
	SSDA0 to SSDA11	I/O	Input/output pins for the I^2C data
	• Simple SPI mode		
	SCK0 to SCK11	I/O	Input/output pins for the clock
	SMISO0 to SMISO11	I/O	Input/output pins for slave transmission of data
	SMOSI0 to SMOSI11	I/O	Input/output pins for master transmission of data
	SS0# to SS11#	Input	Chip-select input pins

Table 1.8 Pin Functions (3 / 4)

Classifications	Pin Name	I/O	Description
Serial communications interface (SCId)	• Asynchronous mode/clock synchronous mode		
	SCK12	I/O	Input/output pin for the clock
	RXD12	Input	Input pin for received data
	TXD12	Output	Output pin for transmitted data
	CTS12#	Input	Input pin for controlling the start of transmission and reception
	RTS12#	Output	Output pin for controlling the start of transmission and reception
	• Simple I^2C mode		
	SSCL12	I/O	Input/output pin for the I^2C clock
	SSDA12	I/O	Input/output pin for the I^2C data
	• Simple SPI mode		
	SCK12	I/O	Input/output pin for the clock
	SMISO12	I/O	Input/output pin for slave transmit data
	SMOSI12	I/O	Input/output pin for master transmit data
	SS12#	Input	Chip-select input pin
	• Extended serial mode		
	RXDX12	Input	Input pin for data reception by SCId
	TXDX12	Output	Output pin for data transmission by SCId
	SIOX12	I/O	Input/output pin for data reception or transmission by SCId
I^2C bus interface	SCL	I/O	Input/output pin for I^2C bus interface clocks. Bus can be directly driven by the N-channel open-drain output.
	SDA	I/O	Input/output pin for I^2C bus interface data. Bus can be directly driven by the N-channel open-drain output.
Serial peripheral interface	RSPCKA	I/O	Clock input/output pin for the RSPI.
	MOSIA	I/O	Input or output data output from the master for the RSPI.
	MISOA	I/O	Input or output data output from the slave for the RSPI.
	SSLA0	I/O	Input/output pin to select the slave for the RSPI.
	SSLA1 to SSLA3	Output	Output pins to select the slave for the RSPI.
12-bit A/D converter	AN000 to AN015	Input	Input pins for the analog signals to be processed by the A/D converter.
	ADTRG0#	Input	Input pin for the external trigger signals that start the A/D conversion.
D/A converter	DA0, DA1	Output	Output pins for the analog signals to be processed by the D/A converter.
Comparator A	CMPA1	Input	Input pin for the comparator A1 analog signal.
	CMPA2	Input	Input pin for the comparator A2 analog signal.
	CVREFA	Input	Input pin for the comparator reference voltage.
Comparator B	CMPB0	Input	Input pin for the comparator B0 analog signal.
	CVREFB0	Input	Input pin for the comparator B0 reference voltage.
	CMPB1	Input	Input pin for the comparator B1 analog signal.
	CVREFB1	Input	Input pin for the comparator B1 reference voltage.

Table 1.8 Pin Functions (4 / 4)

Classifications	Pin Name	I/O	Description
Analog power supply	AVCC0	Input	Analog voltage supply pin for the 12-bit A/D converter. Connect this pin to VCC if the 12-bit A/D converter is not to be used.
	AVSS0	Input	Analog ground pin for the 12-bit A/D converter. Connect this pin to VSS if the 12-bit A/D converter is not to be used.
	VREFH0	Input	Analog reference voltage supply pin for the 12-bit A/D converter. Connect this pin to VCC if the 12-bit A/D converter is not to be used.
	VREFL0	Input	Analog reference ground pin for the 12-bit A/D converter. Connect this pin to VSS if the 12-bit A/D converter is not to be used.
	VREFH	Input	Analog voltage supply pin for the D/A converter. Connect this pin to VCC if the D/A converter is not to be used.
	VREFL	Input	Analog ground pin for the D/A converter. Connect this pin to VSS if the D/A converter is not to be used.
I/O ports	P00 to P03, P05, P07	I/O	6-bit input/output pins.
	P12 to P17	I/O	6-bit input/output pins.
	P20 to P27	I/O	8-bit input/output pins.
	P30 to P37	I/O	8-bit input/output pins. (P35 input pin)
	P40 to P47	I/O	8-bit input/output pins.
	P50 to P56	I/O	7-bit input/output pins.
	P60 to P67	I/O	8-bit input/output pins.
	P70 to P77	I/O	8-bit input/output pins.
	P80 to P83, P86, P87	I/O	6-bit input/output pins.
	P90 to P93	I/O	4-bit input/output pins.
	PA0 to PA7	I/O	8-bit input/output pins.
	PB0 to PB7	I/O	8-bit input/output pins.
	PC0 to PC7	I/O	8-bit input/output pins.
	PD0 to PD7	I/O	8-bit input/output pins.
	PE0 to PE7	I/O	8-bit input/output pins.
	PF5	I/O	1-bit input/output pin.
	PH0 to PH3	I/O	4-bit input/output pins.
	PJ1, PJ3, PJ5	I/O	3-bit input/output pins.
	PK2 to PK5	I/O	4-bit input/output pins.
	PL0, PL1	I/O	2-bit input/output pins.

1.5 Pin Assignments

Figure 1.3 to Figure 1.11 show the pin assignments. Table 1.9 to Table 1.17 show the lists of pins and pin functions.

	A	B	C	D	E	F	G	H	J	K	L	M	N	
13	PE3	PE4	PK4	PE6	P67	PA2	PA4	PA7	PB1	PB5	PL0	PL1	P74	13
12	PE1	PE2	P70	PE5	P65	PA1	VCC	PB0	PB2	PB6	P73	PC1	P75	12
11	P62	P61	PE0	PK5	P66	VSS	PA6	P71	PB4	PB7	PC2	PC0	PC3	11
10	PK3	PK2	P63	PE7	PA0	PA3	PA5	P72	PB3	P76	PC4	P77	P82	10
9	PD6	PD4	PD7	P64						P80	PC5	P81	PC7	9
8	PD2	PD0	PD3	P60						VCC	P83	PC6	VSS	8
7	P92	P91	PD1	PD5						P51	P52	P50	P55	7
6	P90	P47	VSS	P93						P53	P56	PH0	PH1	6
5	P45	P43	P46	VCC	P44					P54	P13	PH3	PH2	5
4	P42	VREFL0	P41	P01	NC	PJ1	NC	P35	P30	P15	P24	P12	P14	4
3	P40	P05	VREFH0	P03	PJ5	PJ3	MD	VSS	P32	P31	P16	P86	P87	3
2	P07	AVCC0	P02	PF5	VCL	XCOUT	RES#	VCC	P33	P26	P23	P17	P20	2
1	AVSS0	VREFH	VREFL	P00	VSS	XCIN	XTAL	EXTAL	P34	P27	P25	P22	P21	1
	A	B	C	D	E	F	G	H	J	K	L	M	N	

RX210 Group
PTLG0145KA-A
(145-pin TFLGA)
(Upper perspective view)

Note: • This figure indicates the power supply pins and I/O port pins. For the pin configuration, see the table “List of Pins and Pin Functions (145-Pin TFLGA)”.
Note: • For the position of A1 pin in the package, see “Package Dimensions”.

Figure 1.3 Pin Assignments of the 145-Pin TFLGA (Upper Perspective View)

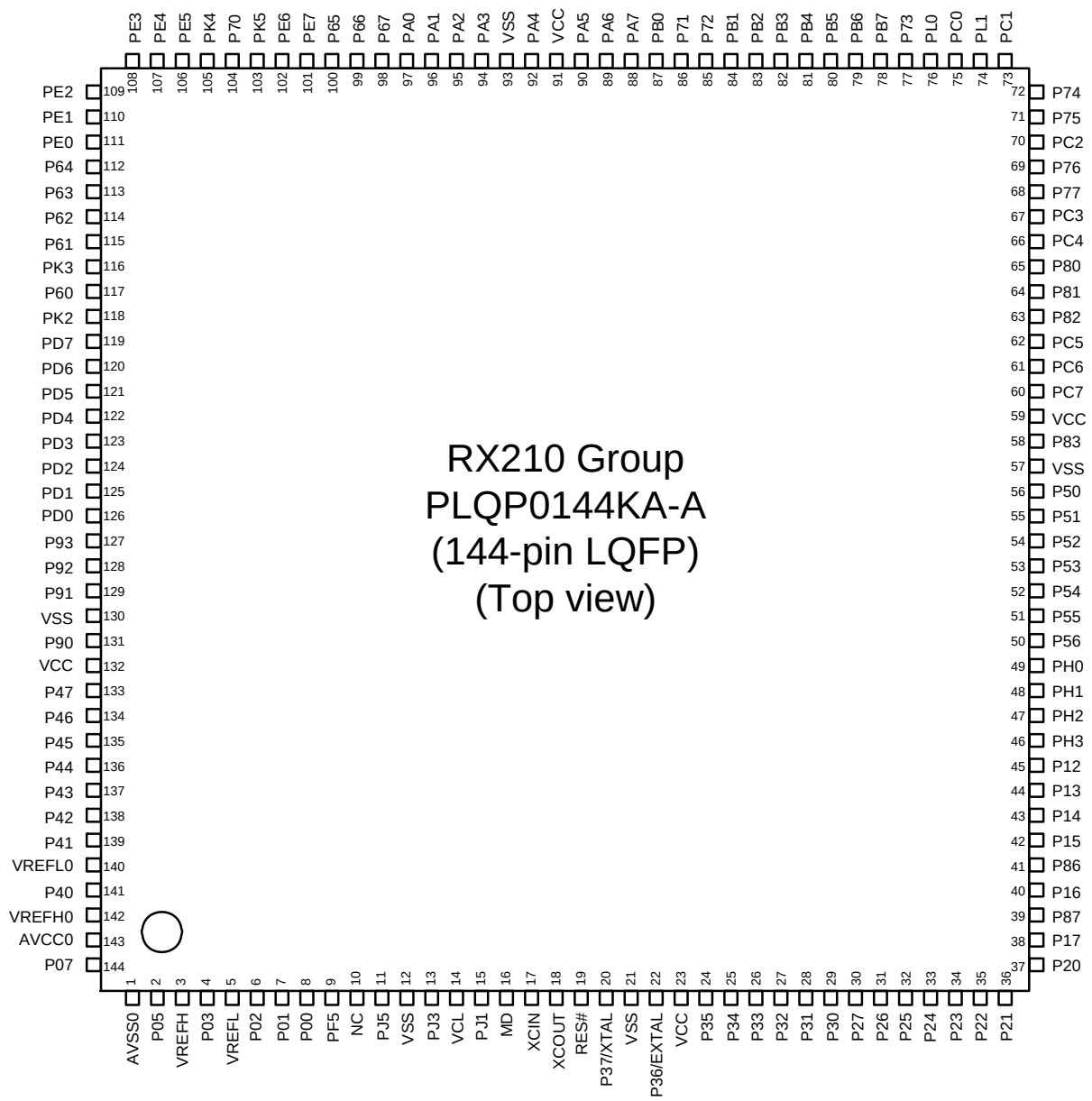

Note: • This figure indicates the power supply pins and I/O port pins. For the pin configuration, see the table “List of Pins and Pin Functions (144-Pin LQFP)”.

Figure 1.4 Pin Assignments of the 144-Pin LQFP

RX210 Group
PTLG0100JA-A
(100-pin TFLGA)
(Upper perspective view)

	10	9	8	7	6	5	4	3	2	1	
K	PC2	PC3	PC5	P51	PH1	PH2	P14	P20	P22	P23	K
J	PC1	PC0	PC4	P50	PH3	PH0	P13	P17	P21	P24	J
H	PB7	PB6	PC6	PC7	P54	P55	P15	P16	P25	P26	H
G	VCC	PB1	PB4	PB5	P52	P53	P27	P30	P31	P33	G
F	VSS	PA7	PB0	PB2	PB3	P12	P32	P35	VCC	P36/ EXTAL	F
E	PA3	PA5	PA4	PA6	PA2	P41	P34	RES#	VSS	P37/ XTAL	E
D	PA0	PA1	PE7	PE6	P46	P45	PJ1	MD	XCOUT	XCIN	D
C	PE4	PE5	PD5	PD2	P47	P42	VREFH0	PJ3	VREFL	VCL	C
B	PE3	PD7	PD6	PD3	PD1	P44	P40	AVCC0	AVSS0	P03	B
A	PE2	PE1	PE0	PD4	PD0	P43	VREFL0	P07	VREFH	P05	A
	10	9	8	7	6	5	4	3	2	1	

Note: • This figure indicates the power supply pins and I/O port pins. For the pin configuration, see the table “List of Pins and Pin Functions (100-Pin TFLGA)”.
Note: • For the position of A1 pin in the package, see “Package Dimensions”.

Figure 1.5 Pin Assignments of the 100-Pin TFLGA (Upper Perspective View)

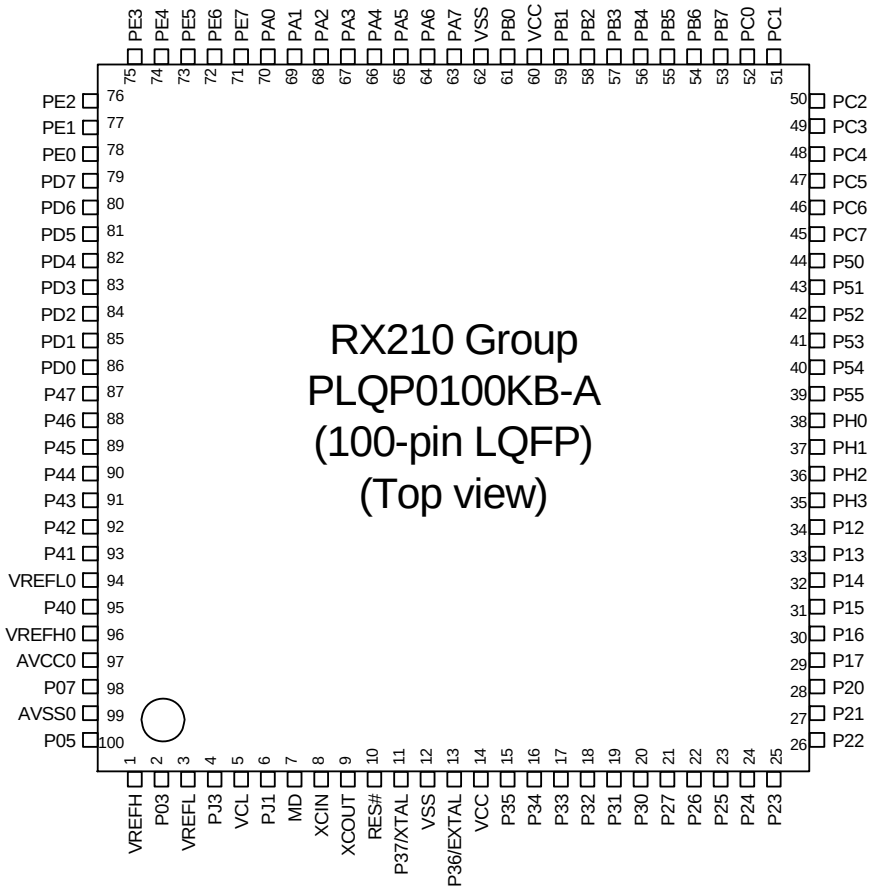

Note: • This figure indicates the power supply pins and I/O port pins. For the pin configuration, see the table “List of Pins and Pin Functions (100-Pin LQFP)”.

Figure 1.6 Pin Assignments of the 100-Pin LQFP

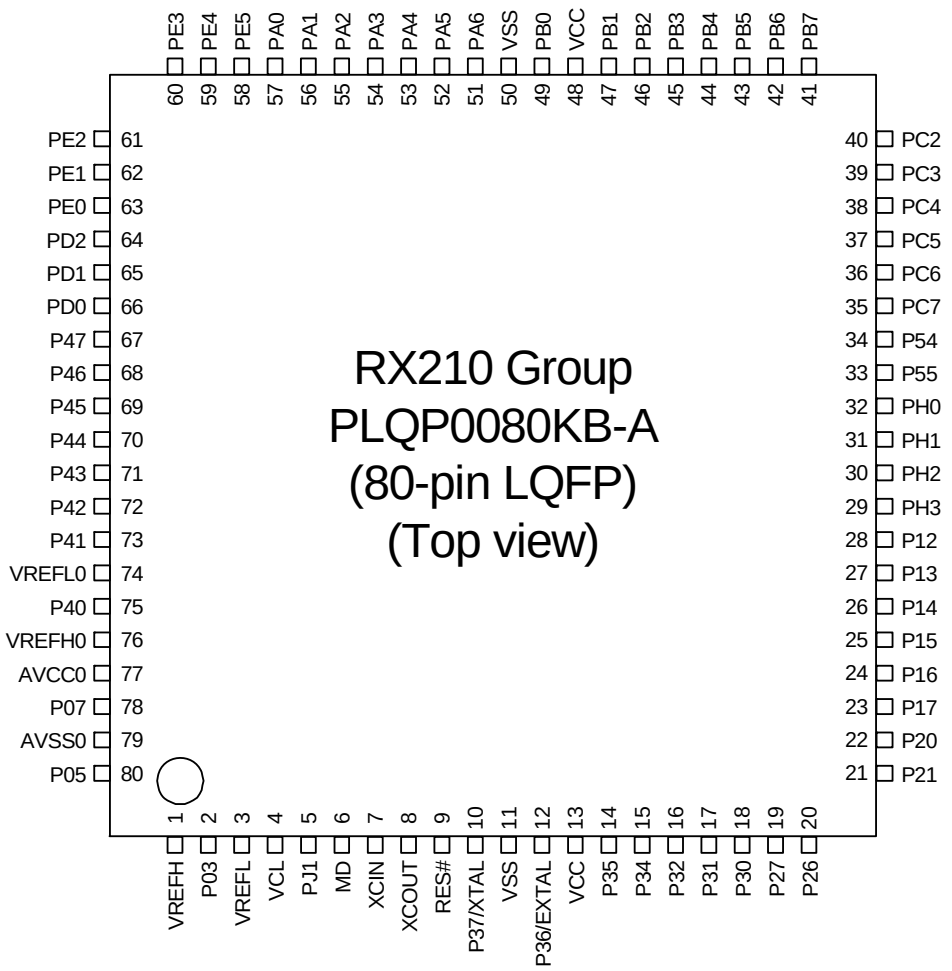

Note: • This figure indicates the power supply pins and I/O port pins. For the pin configuration, see the table “List of Pins and Pin Functions (80-Pin LQFP)”.

Figure 1.7 Pin Assignments of the 80-Pin LQFP

RX210 Group
SWBG0069LA-A
(69-pin WLBGA)
(Top view)

	A	B	C	D	E	F	G	H	J	
9	AVSS0	VCL	XCIN	XCOUT	VSS	VCC	P35	P30	NC	9
8	AVSS0	P05	P03	RES#	XTAL	EXTAL	P32	P26	P16	8
7	AVCC0	VREFH0	P40	MD		P31	P27	P17	P15	7
6	VREFL0	P41	P42				P14	PH3	PH2	6
5	P43	P44	PE0				PH1	P55	PH0	5
4	VREFH	P46	PE1				P54	PC6	PC7	4
3	VREFL	PE3	PA0	PA1			NC	PC5	PC4	3
2	PE2	PE4	PA4	PB0	PB1	PB3	PB6	PC3	PC2	2
1	NC	PE5	PA3	PA6	VSS	VCC	PB5	PB7	NC	1
	A	B	C	D	E	F	G	H	J	

Note: • This figure indicates the power supply pins and I/O ports.
For the pin configuration, see the table “List of Pins and Pin Functions (69-Pin WLBGA)”.
Note: • For the position of A1 pin in the package, see “Package Dimensions”.
Note: • Leave the NC pin open.

Figure 1.8 Pin Assignments of the 69-Pin WLBGA

RX210 Group
PTLG0064JA-A
(64-pin TFLGA)

(Upper perspective view)

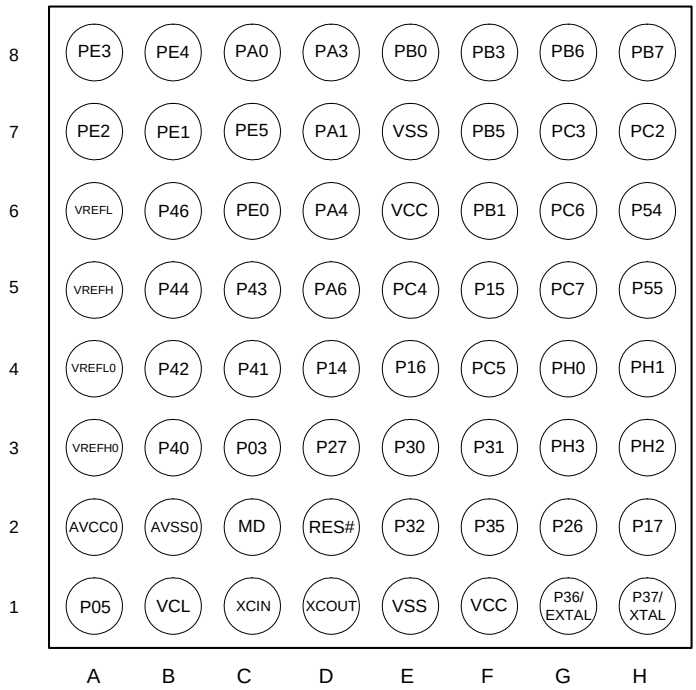

Note: • This figure indicates the power supply pins and I/O port pins. For the pin configuration, see the table “List of Pins and Pin Functions (64-Pin TFLGA)”.

Note: • For the position of A1 pin in the package, see “Package Dimensions”.

Figure 1.9 Pin Assignments of the 64-Pin TFLGA

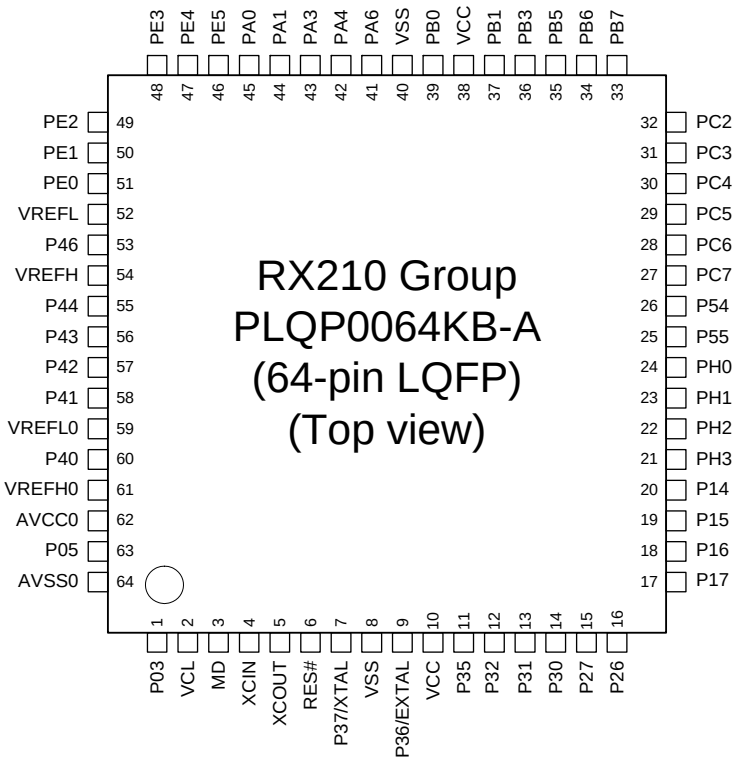

Note: • This figure indicates the power supply pins and I/O port pins. For the pin configuration, see the table “List of Pins and Pin Functions (64-Pin LQFP)”.

Figure 1.10 Pin Assignments of the 64-Pin LQFP

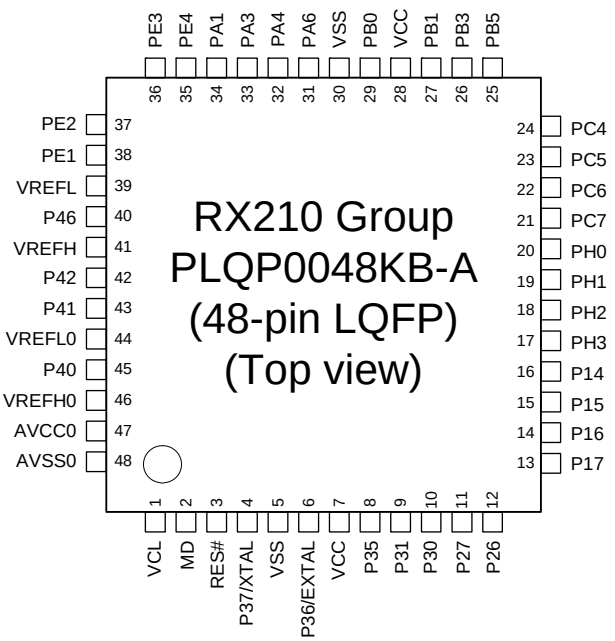

Note: • This figure indicates the power supply pins and I/O port pins. For the pin configuration, see the table “List of Pins and Pin Functions (48-Pin LQFP)”.

Figure 1.11 Pin Assignments of the 48-Pin LQFP

Table 1.9 List of Pins and Pin Functions (145-Pin TFLGA) (1 / 4)

Pin No.	Power Supply, Clock, System Control	I/O Port	External Bus	Timers (MTU, TMR, POE)	Communications (SCIc, SCId, RSPI, RIIC)	Others
A1	AVSS0					
A2		P07				ADTRG0#
A3		P40				AN000
A4		P42				AN002
A5		P45				AN005
A6		P90			TXD7/SMOSI7/SSDA7	
A7		P92			RXD7/SMISO7/SSCL7	
A8		PD2	D2[A2/D2]	MTIOC4D		IRQ2
A9		PD6	D6[A6/D6]	MTIC5V/POE1#		IRQ6
A10		PK3			RXD9/SMISO9/SSCL9	
A11		P62				
A12		PE1	D9[A9/D9]	MTIOC4C	TXD12/TXDX12/SIOX12/ SMOSI12/SSDA12	AN009/CMPB0
A13		PE3	D11[A11/D11]	MTIOC4B/POE8#	CTS12#/RTS12#/SS12#	AN011/CMPA1
B1	VREFH					
B2	AVCC0					
B3		P05				DA1
B4	VREFL0					
B5		P43				AN003
B6		P47				AN007
B7		P91			SCK7	
B8		PD0	D0[A0/D0]			IRQ0
B9		PD4	D4[A4/D4]	POE3#		IRQ4
B10		PK2			TXD9/SMOSI9/SSDA9	
B11		P61			CTS9#/RTS9#/SS9#	
B12		PE2	D10[A10/D10]	MTIOC4A	RXD12/RXDX12/ SMISO12/SSCL12	IRQ7-DS/AN010/ CVREFB0
B13		PE4	D12[A12/D12]	MTIOC4D/MTIOC1A		AN012/CMPA2
C1	VREFL					
C2		P02		TMCI1	SCK6	
C3	VREFH0					
C4		P41				AN001
C5		P46				AN006
C6	VSS					
C7		PD1	D1[A1/D1]	MTIOC4B		IRQ1
C8		PD3	D3[A3/D3]	POE8#		IRQ3
C9		PD7	D7[A7/D7]	MTIC5U/POE0#		IRQ7
C10		P63				
C11		PE0	D8[A8/D8]		SCK12	AN008
C12		P70			SCK4	
C13		PK4			RXD4/SMISO4/SSCL4	
D1		P00		TMRI0	TXD6/SMOSI6/SSDA6	
D2		PF5				IRQ4
D3		P03				DA0
D4		P01		TMCI0	RXD6/SMISO6/SSCL6	
D5	VCC					
D6		P93			CTS7#/RTS7#/SS7#	
D7		PD5	D5[A5/D5]	MTIC5W/POE2#		IRQ5
D8		P60			SCK9	
D9		P64				
D10		PE7	D15[A15/D15]			IRQ7/AN015

Table 1.9 List of Pins and Pin Functions (145-Pin TFLGA) (2 / 4)

Pin No.	Power Supply, Clock, System Control	I/O Port	External Bus	Timers (MTU, TMR, POE)	Communications (SCIc, SCId, RSPI, RIIC)	Others
D11		PK5			TXD4/SMOSI4/SSDA4	
D12		PE5	D13[A13/D13]	MTIOC4C/MTIOC2B		IRQ5/AN013
D13		PE6	D14[A14/D14]		CTS4#/RTS4#/SS4#	IRQ6/AN014
E1	VSS					
E2	VCL					
E3		PJ5				
E4	NC					
E5		P44				AN004
E10		PA0	A0/BC0#	MTIOC4A/TIOCA0	SSLA1	CACREF
E11		P66				
E12		P65				
E13		P67				
F1	XCIN					
F2	XCOUT					
F3		PJ3		MTIOC3C	CTS6#/RTS6#/SS6#/ CTS0#/RTS0#/SS0#	
F4		PJ1		MTIOC3A		
F10		PA3	A3	MTIOC0D/MTCLKD/ TIOCD0/TCLKB	RXD5/SMISO5/SSCL5	IRQ6-DS/CMPB1
F11	VSS					
F12		PA1	A1	MTIOC0B/MTCLKC/ TIOCB0	SCK5/SSLA2	CVREFA
F13		PA2	A2		RXD5/SMISO5/SSCL5/ SSLA3	
G1	XTAL	P37				
G2	RES#					
G3	MD					FINED
G4	NC					
G10		PA5	A5	TIOCB1	RSPCKA	
G11		PA6	A6	MTIC5V/MTCLKB/ TMCI3/POE2#/TIOCA2	CTS5#/RTS5#/SS5#/ MOSIA/	
G12	VCC					
G13		PA4	A4	MTIC5U/MTCLKA/ TMRI0/TIOCA1	TXD5/SMOSI5/SSDA5/ SSLA0	IRQ5-DS/CVREFB1
H1	EXTAL	P36				
H2	VCC					
H3	VSS					
H4		P35				NMI
H10		P72				
H11		P71				
H12		PB0	A8	MTIC5W/TIOCA3	RXD4/SMISO4/SSCL4/ RXD6/SMISO6/SSCL6/ RSPCKA	
H13		PA7	A7	TIOCB2	MISOA	
J1		P34		MTIOC0A/TMCI3/ POE2#	SCK6/SCK0	IRQ4
J2		P33		MTIOC0D/TMRI3/ POE3#/TIOCD0	RXD6/SMISO6/SSCL6/ RXD0/SMISO0/SSCL0	IRQ3-DS
J3		P32		MTIOC0C/TMO3/ TIOCC0	TXD6/SMOSI6/SSDA6/ TXD0/SMOSI0/SSDA0	IRQ2-DS/RTCOUT/ RTCIC2
J4		P30		MTIOC4B/TMRI3/ POE8#	RXD1/SMISO1/SSCL1	IRQ0-DS/RTCIC0
J10		PB3	A11	MTIOC0A/MTIOC4A/ TMO0/POE3#/ TIOCD3/TCLKD	SCK4/SCK6	
J11		PB4	A12	TIOCA4	CTS9#/RTS9#/SS9#	

Table 1.9 List of Pins and Pin Functions (145-Pin TFLGA) (3 / 4)

Pin No.	Power Supply, Clock, System Control	I/O Port	External Bus	Timers (MTU, TMR, POE)	Communications (SCIc, SCId, RSPI, RIIC)	Others
J12		PB2	A10	TIOCC3/TCLKC	CTS4#/RTS4#/SS4#/ CTS6#/RTS6#/SS6#	
J13		PB1	A9	MTIOC0C/MTIOC4C/ TMCI0/TIOCB3	TXD4/SMOSI4/SSDA4/ TXD6/SMOSI6/SSDA6	IRQ4-DS
K1		P27	CS3#	MTIOC2B/TMCI3	SCK1	
K2		P26	CS2#	MTIOC2A/TMO1	TXD1/SMOSI1/SSDA1/ CTS3#/RTS3#/SS3#	
K3		P31		MTIOC4D/TMCI2	CTS1#/RTS1#/SS1#	IRQ1-DS/RTCIC1
K4		P15		MTIOC0B/MTCLKB/ TMCI2/TIOCB2/TCLKB	RXD1/SMISO1/SSCL1/ SCK3	IRQ5
K5		P54	ALE	MTIOC4B/TMCI1	CTS2#/RTS2#/SS2#	
K6	BCLK	P53				
K7		P51	WR1#/BC1#/WAIT#		SCK2	
K8	VCC					
K9		P80		MTIOC3B	SCK10	
K10		P76			RXD11/SMISO11/SSCL11	
K11		PB7	A15	MTIOC3B/TIOCB5	TXD9/SMOSI9/SSDA9	
K12		PB6	A14	MTIOC3D/TIOCA5	RXD9/SMISO9/SSCL9	
K13		PB5	A13	MTIOC2A/MTIOC1B/ TMRI1/POE1#/TIOCB4	SCK9	
L1		P25	CS1#	MTIOC4C/MTCLKB/ TIOCA4	RXD3/SMISO3/SSCL3	ADTRG0#
L2		P23		MTIOC3D/MTCLKD/ TIOCD3	CTS0#/RTS0#/SS0#/ TXD3/SMOSI3/SSDA3	
L3		P16		MTIOC3C/MTIOC3D/ TMO2/TIOCB1/TCLKC	TXD1/SMOSI1/SSDA1/ MOSIA/SCL-DS/RXD3/ SMISO3/SSCL3	IRQ6/RTCOUT/ ADTRG0#
L4		P24	CS0#	MTIOC4A/MTCLKA/ TMRI1/TIOCB4	SCK3	
L5		P13		MTIOC0B/TMO3/ TIOCA5	SDA/TXD2/SMOSI2/ SSDA2	IRQ3
L6		P56		MTIOC3C/TIOCA1		
L7		P52	RD#		RXD2/SMISO2/SSCL2	
L8		P83		MTIOC4C	CTS10#/RTS10#	
L9		PC5	A21/CS2#/WAIT#	MTIOC3B/MTCLKD/ TMRI2	SCK8/RSPCKA	
L10		PC4	A20/CS3#	MTIOC3D/MTCLKC/ TMCI1/POE0#	SCK5/CTS8#/RTS8#/ SS8#/SSLA0	
L11		PC2	A18	MTIOC4B/TCLKA	RXD5/SMISO5/SSCL5/ SSLA3	
L12		P73				
L13		PL0				
M1		P22		MTIOC3B/MTCLKC/ TMO0/TIOCC3	SCK0	
M2		P17		MTIOC3A/MTIOC3B/ TMO1/POE8#/TIOCB0/ TCLKD	SCK1/MISOA/SDA-DS/ TXD3/SMOSI3/SSDA3	IRQ7
M3		P86		TIOCA0		
M4		P12		TMCI1	SCL/RXD2/SMISO2/ SSCL2	IRQ2
M5		PH3		TMCI0		
M6		PH0				CACREF
M7		P50	WR0#/WR#		TXD2/SMOSI2/SSDA2	
M8		PC6	A22/CS1#	MTIOC3C/MTCLKA/ TMCI2	RXD8/SMISO8/SSCL8/ MOSIA	
M9		P81		MTIOC3D	RXD10/SMISO10/SSCL10	
M10		P77			TXD11/SMOSI11/SSDA11	

Table 1.9 List of Pins and Pin Functions (145-Pin TFLGA) (4 / 4)

Pin No.	Power Supply, Clock, System Control	I/O Port	External Bus	Timers (MTU, TMR, POE)	Communications (SCIc, SCId, RSPI, RIIC)	Others
M11		PC0	A16	MTIOC3C/TCLKC	CTS5#/RTS5#/SS5#/ SSLA1	
M12		PC1	A17	MTIOC3A/TCLKD	SCK5/SSLA2	
M13		PL1				
N1		P21		MTIOC1B/TMCI0/ TIOCA3	RXD0/SMISO0/SSCL0	
N2		P20		MTIOC1A/TMRI0/ TIOCB3	TXD0/SMOSI0/SSDA0	
N3		P87		TIOCA2		
N4		P14		MTIOC3A/MTCLKA/ TMRI2/TIOCB5/TCLKA	CTS1#/RTS1#/SS1#	IRQ4
N5		PH2		TMRI0		IRQ1
N6		PH1		TMO0		IRQ0
N7		P55	WAIT#	MTIOC4D/TMO3		
N8	VSS					
N9		PC7	A23/CS0#	MTIOC3A/TMO2/ MTCLKB	TXD8/SMOSI8/SSDA8/ MISOA	CACREF
N10		P82		MTIOC4A	TXD10/SMOSI10/SSDA10	
N11		PC3	A19	MTIOC4D/TCLKB	TXD5/SMOSI5/SSDA5	
N12		P75			SCK11	
N13		P74			CTS11#/RTS11#/SS11#	

Note: • Pin names to which –DS is appended are for pins that can be used to trigger release from deep software standby mode.
Note: • Leave the NC pin open.

Table 1.10 List of Pins and Pin Functions (144-Pin LQFP) (1 / 4)

Pin No.	Power Supply, Clock, System Control	I/O Port	External Bus	Timers (MTU, TMR, POE)	Communications (SCIc, SCId, RSPI, RIIC)	Others
1	AVSS0					
2		P05				DA1
3	VREFH					
4		P03				DA0
5	VREFL					
6		P02		TMCI1	SCK6	
7		P01		TMCI0	RXD6/SMISO6/SSCL6	
8		P00		TMRI0	TXD6/SMOSI6/SSDA6	
9		PF5				IRQ4
10	NC					
11		PJ5				
12	VSS					
13		PJ3		MTIOC3C	CTS6#/RTS6#/SS6#/ CTS0#/RTS0#/SS0#	
14	VCL					
15		PJ1		MTIOC3A		
16	MD					FINED
17	XCIN					
18	XCOUT					
19	RES#					
20	XTAL	P37				
21	VSS					
22	EXTAL	P36				
23	VCC					
24		P35				NMI
25		P34		MTIOC0A/TMCI3/ POE2#	SCK6/SCK0	IRQ4
26		P33		MTIOC0D/TMRI3/ POE3#/TIOCD0	RXD6/SMISO6/SSCL6/ RXD0/SMISO0/SSCL0	IRQ3-DS
27		P32		MTIOC0C/TMO3/ TIOCC0	TXD6/SMOSI6/SSDA6/ TXD0/SMOSI0/SSDA0	IRQ2-DS/RTCOUT/ RTCIC2
28		P31		MTIOC4D/TMCI2	CTS1#/RTS1#/SS1#	IRQ1-DS/RTCIC1
29		P30		MTIOC4B/TMRI3/ POE8#	RXD1/SMISO1/SSCL1	IRQ0-DS/RTCIC0
30		P27	CS3#	MTIOC2B/TMCI3	SCK1	
31		P26	CS2#	MTIOC2A/TMO1	TXD1/SMOSI1/SSDA1/ CTS3#/RTS3#/SS3#	
32		P25	CS1#	MTIOC4C/MTCLKB/ TIOCA4	RXD3/SMISO3/SSCL3	ADTRG0#
33		P24	CS0#	MTIOC4A/MTCLKA/ TMRI1/TIOCB4	SCK3	
34		P23		MTIOC3D/MTCLKD/ TIOCD3	CTS0#/RTS0#/SS0#/ TXD3/SMOSI3/SSDA3	
35		P22		MTIOC3B/MTCLKC/ TMO0/TIOCC3	SCK0	
36		P21		MTIOC1B/TMCI0/ TIOCA3	RXD0/SMISO0/SSCL0	
37		P20		MTIOC1A/TMRI0/ TIOCB3	TXD0/SMOSI0/SSDA0	
38		P17		MTIOC3A/MTIOC3B/ TMO1/POE8#/TIOCB0/ TCLKD	SCK1/MISOA/SDA-DS/ TXD3/SMOSI3/SSDA3	IRQ7
39		P87		TIOCA2		

Table 1.10 List of Pins and Pin Functions (144-Pin LQFP) (2 / 4)

Pin No.	Power Supply, Clock, System Control	I/O Port	External Bus	Timers (MTU, TMR, POE)	Communications (SCIc, SCId, RSPI, RIIC)	Others
40		P16		MTIOC3C/MTIOC3D/ TMO2/TIOCB1/TCLKC	TXD1/SMOSI1/SSDA1/ MOSIA/SCL-DS/RXD3/ SMISO3/SSCL3	IRQ6/RTCOUT/ ADTRG0#
41		P86		TIOCA0		
42		P15		MTIOC0B/MTCLKB/ TMCI2/TIOCB2/TCLKB	RXD1/SMISO1/SSCL1/ SCK3	IRQ5
43		P14		MTIOC3A/MTCLKA/ TMRI2/TIOCB5/TCLKA	CTS1#/RTS1#/SS1#	IRQ4
44		P13		MTIOC0B/TMO3/ TIOCA5	SDA/TXD2/SMOSI2/ SSDA2	IRQ3
45		P12		TMCI1	SCL/RXD2/SMISO2/ SSCL2	IRQ2
46		PH3		TMCI0		
47		PH2		TMRI0		IRQ1
48		PH1		TMO0		IRQ0
49		PH0				CACREF
50		P56		MTIOC3C/TIOCA1		
51		P55	WAIT#	MTIOC4D/TMO3		
52		P54	ALE	MTIOC4B/TMCI1	CTS2#/RTS2#/SS2#	
53	BCLK	P53				
54		P52	RD#		RXD2/SMISO2/SSCL2	
55		P51	WR1#/BC1#/WAIT#		SCK2	
56		P50	WR0#/WR#		TXD2/SMOSI2/SSDA2	
57	VSS					
58		P83		MTIOC4C	CTS10#/RTS10#	
59	VCC					
60		PC7	A23/CS0#	MTIOC3A/TMO2/ MTCLKB	TXD8/SMOSI8/SSDA8/ MISOA	CACREF
61		PC6	A22/CS1#	MTIOC3C/MTCLKA/ TMCI2	RXD8/SMISO8/SSCL8/ MOSIA	
62		PC5	A21/CS2#/WAIT#	MTIOC3B/MTCLKD/ TMRI2	SCK8/RSPCKA	
63		P82		MTIOC4A	TXD10/SMOSI10/SSDA10	
64		P81		MTIOC3D	RXD10/SMISO10/SSCL10	
65		P80		MTIOC3B	SCK10	
66		PC4	A20/CS3#	MTIOC3D/MTCLKC/ TMCI1/POE0#	SCK5/CTS8#/RTS8#/ SS8#/SSLA0	
67		PC3	A19	MTIOC4D/TCLKB	TXD5/SMOSI5/SSDA5	
68		P77			TXD11/SMOSI11/SSDA11	
69		P76			RXD11/SMISO11/SSCL11	
70		PC2	A18	MTIOC4B/TCLKA	RXD5/SMISO5/SSCL5/ ISSLA3	
71		P75			SCK11	
72		P74			CTS11#/RTS11#/SS11#	
73		PC1	A17	MTIOC3A/TCLKD	SCK5/SSLA2	
74		PL1				
75		PC0	A16	MTIOC3C/TCLKC	CTS5#/RTS5#/SS5#/ SSLA1	
76		PL0				
77		P73				
78		PB7	A15	MTIOC3B/TIOCB5	TXD9/SMOSI9/SSDA9	
79		PB6	A14	MTIOC3D/TIOCA5	RXD9/SMISO9/SSCL9	
80		PB5	A13	MTIOC2A/MTIOC1B/ TMRI1/POE1#/TIOCB4	SCK9	

Table 1.10 List of Pins and Pin Functions (144-Pin LQFP) (3 / 4)

Pin No.	Power Supply, Clock, System Control	I/O Port	External Bus	Timers (MTU, TMR, POE)	Communications (SCIc, SCId, RSPI, RIIC)	Others
81		PB4	A12	TIOCA4	CTS9#/RTS9#/SS9#	
82		PB3	A11	MTIOC0A/MTIOC4A/ TMO0/POE3#/ TIOCD3/TCLKD	SCK4/SCK6	
83		PB2	A10	TIOCC3/TCLKC	CTS4#/RTS4#/SS4#/ CTS6#/RTS6#/SS6#	
84		PB1	A9	MTIOC0C/MTIOC4C/ TMCI0/TIOCB3	TXD4/SMOSI4/SSDA4/ TXD6/SMOSI6/SSDA6	IRQ4-DS
85		P72				
86		P71				
87		PB0	A8	MTIC5W/TIOCA3	RXD4/SMISO4/SSCL4/ RXD6/SMISO6/SSCL6/ RSPCKA	
88		PA7	A7	TIOCB2	MISOA	
89		PA6	A6	MTIC5V/MTCLKB/ TMCI3/POE2#/TIOCA2	CTS5#/RTS5#/SS5#/ MOSIA/	
90		PA5	A5	TIOCB1	RSPCKA	
91	VCC					
92		PA4	A4	MTIC5U/MTCLKA/ TMRI0/TIOCA1	TXD5/SMOSI5/SSDA5/ SSLA0	IRQ5-DS/CVREFB1
93	VSS					
94		PA3	A3	MTIOC0D/MTCLKD/ TIOCD0/TCLKB	RXD5/SMISO5/SSCL5	IRQ6-DS/CMPB1
95		PA2	A2		RXD5/SMISO5/SSCL5/ SSLA3	
96		PA1	A1	MTIOC0B/MTCLKC/ TIOCB0	SCK5/SSLA2	CVREFA
97		PA0	A0/BC0#	MTIOC4A/TIOCA0	SSLA1	CACREF
98		P67				
99		P66				
100		P65				
101		PE7	D15[A15/D15]			IRQ7/AN015
102		PE6	D14[A14/D14]		CTS4#/RTS4#/SS4#	IRQ6/AN014
103		PK5			TXD4/SMOSI4/SSDA4	
104		P70			SCK4	
105		PK4			RXD4/SMISO4/SSCL4	
106		PE5	D13[A13/D13]	MTIOC4C/MTIOC2B		IRQ5/AN013
107		PE4	D12[A12/D12]	MTIOC4D/MTIOC1A		AN012/CMPA2
108		PE3	D11[A11/D11]	MTIOC4B/POE8#	CTS12#/RTS12#/SS12#	AN011/CMPA1
109		PE2	D10[A10/D10]	MTIOC4A	RXD12/RXDX12/ SMISO12/SSCL12	IRQ7-DS/AN010/ CVREFB0
110		PE1	D9[A9/D9]	MTIOC4C	TXD12/TXDX12/SIOX12/ SMOSI12/SSDA12	AN009/CMPB0
111		PE0	D8[A8/D8]		SCK12	AN008
112		P64				
113		P63				
114		P62				
115		P61			CTS9#/RTS9#/SS9#	
116		PK3			RXD9/SMISO9/SSCL9	
117		P60			SCK9	
118		PK2			TXD9/SMOSI9/SSDA9	
119		PD7	D7[A7/D7]	MTIC5U/POE0#		IRQ7
120		PD6	D6[A6/D6]	MTIC5V/POE1#		IRQ6
121		PD5	D5[A5/D5]	MTIC5W/POE2#		IRQ5

Table 1.10 List of Pins and Pin Functions (144-Pin LQFP) (4 / 4)

Pin No.	Power Supply, Clock, System Control	I/O Port	External Bus	Timers (MTU, TMR, POE)	Communications (SCIc, SCId, RSPI, RIIC)	Others
122		PD4	D4[A4/D4]	POE3#		IRQ4
123		PD3	D3[A3/D3]	POE8#		IRQ3
124		PD2	D2[A2/D2]	MTIOC4D		IRQ2
125		PD1	D1[A1/D1]	MTIOC4B		IRQ1
126		PD0	D0[A0/D0]			IRQ0
127		P93			CTS7#/RTS7#/SS7#	
128		P92			RXD7/SMISO7/SSCL7	
129		P91			SCK7	
130	VSS					
131		P90			TXD7/SMOSI7/SSDA7	
132	VCC					
133		P47				AN007
134		P46				AN006
135		P45				AN005
136		P44				AN004
137		P43				AN003
138		P42				AN002
139		P41				AN001
140	VREFL0					
141		P40				AN000
142	VREFH0					
143	AVCC0					
144		P07				ADTRG0#

Note: • Pin names to which –DS is appended are for pins that can be used to trigger release from deep software standby mode.
Note: • Leave the NC pin open.

Table 1.11 List of Pins and Pin Functions (100-Pin TFLGA) (1 / 3)

Pin No.	Power Supply, Clock, System Control	I/O Port	External Bus	Timers (MTU, TMR, POE)	Communications (SCIc, SCId, RSPI, RIIC)	Others
A1		P05				DA1
A2	VREFH					
A3		P07				ADTRG0#
A4	VREFL0					
A5		P43				AN003
A6		PD0	D0[A0/D0]			IRQ0
A7		PD4	D4[A4/D4]	POE3#		IRQ4
A8		PE0	D8[A8/D8]		SCK12	AN008
A9		PE1	D9[A9/D9]	MTIOC4C	TXD12/TXDX12/SIOX12/ SMOSI12/SSDA12	AN009/CMPB0
A10		PE2	D10[A10/D10]	MTIOC4A	RXD12/RXDX12/ SMISO12/SSCL12	IRQ7-DS/AN010/ CVREFB0
B1		P03				DA0
B2	AVSS0					
B3	AVCC0					
B4		P40				AN000
B5		P44				AN004
B6		PD1	D1[A1/D1]	MTIOC4B		IRQ1
B7		PD3	D3[A3/D3]	POE8#		IRQ3
B8		PD6	D6[A6/D6]	MTIC5V/POE1#		IRQ6
B9		PD7	D7[A7/D7]	MTIC5U/POE0#		IRQ7
B10		PE3	D11[A11/D11]	MTIOC4B/POE8#	CTS12#/RTS12#/SS12#	AN011/CMPA1
C1	VCL					
C2	VREFL					
C3		PJ3		MTIOC3C	CTS6#/RTS6#/SS6#	
C4	VREFH0					
C5		P42				AN002
C6		P47				AN007
C7		PD2	D2[A2/D2]	MTIOC4D		IRQ2
C8		PD5	D5[A5/D5]	MTIC5W/POE2#		IRQ5
C9		PE5	D13[A13/D13]	MTIOC4C/MTIOC2B		IRQ5/AN013
C10		PE4	D12[A12/D12]	MTIOC4D/MTIOC1A		AN012/CMPA2
D1	XCIN					
D2	XCOUT					
D3	MD					FINED
D4		PJ1		MTIOC3A		
D5		P45				AN005
D6		P46				AN006
D7		PE6	D14[A14/D14]			IRQ6/AN014
D8		PE7	D15[A15/D15]			IRQ7/AN015
D9		PA1	A1	MTIOC0B/MTCLKC	SCK5/SSLA2	CVREFA
D10		PA0	A0/BC0#	MTIOC4A	SSLA1	CACREF
E1	XTAL	P37				
E2	VSS					
E3	RES#					
E4		P34		MTIOC0A/TMCI3/ POE2#	SCK6	IRQ4
E5		P41				AN001

Table 1.11 List of Pins and Pin Functions (100-Pin TFLGA) (2 / 3)

Pin No.	Power Supply, Clock, System Control	I/O Port	External Bus	Timers (MTU, TMR, POE)	Communications (SCIc, SCId, RSPI, RIIC)	Others
E6		PA2	A2		RXD5/SMISO5/SSCL5/ SSLA3	
E7		PA6	A6	MTIC5V/MTCLKB/ TMCI3/POE2#	CTS5#/RTS5#/SS5#/ MOSIA	
E8		PA4	A4	MTIC5U/MTCLKA/ TMRI0	TXD5/SMOSI5/SSDA5/ SSLA0	IRQ5-DS/CVREFB1
E9		PA5	A5		RSPCKA	
E10		PA3	A3	MTIOC0D/MTCLKD	RXD5/SMISO5/SSCL5	IRQ6-DS/CMPB1
F1	EXTAL	P36				
F2	VCC					
F3		P35				NMI
F4		P32		MTIOC0C/TMO3	TXD6/SMOSI6/SSDA6	IRQ2-DS/RTCOUT/ RTCIC2
F5		P12		TMCI1	SCL	IRQ2
F6		PB3	A11	MTIOC0A/MTIOC4A/ TMO0/POE3#	SCK6	
F7		PB2	A10		CTS6#/RTS6#/SS6#	
F8		PB0	A8	MTIC5W	RXD6/SMISO6/SSCL6/ RSPCKA	
F9		PA7	A7		MISOA	
F10	VSS					
G1		P33		MTIOC0D/TMRI3/ POE3#	RXD6/SMISO6/SSCL6	IRQ3-DS
G2		P31		MTIOC4D/TMCI2	CTS1#/RTS1#/SS1#	IRQ1-DS/RTCIC1
G3		P30		MTIOC4B/TMRI3/ POE8#	RXD1/SMISO1/SSCL1	IRQ0-DS/RTCIC0
G4		P27	CS3#	MTIOC2B/TMCI3	SCK1	
G5	BCLK	P53				
G6		P52	RD#			
G7		PB5	A13	MTIOC2A/MTIOC1B/ TMRI1/POE1#	SCK9	
G8		PB4	A12		CTS9#/RTS9#/SS9#	
G9		PB1	A9	MTIOC0C/MTIOC4C/ TMCI0	TXD6/SMOSI6/SSDA6	IRQ4-DS
G10	VCC					
H1		P26	CS2#	MTIOC2A/TMO1	TXD1/SMOSI1/SSDA1	
H2		P25	CS1#	MTIOC4C/MTCLKB		ADTRG0#
H3		P16		MTIOC3C/MTIOC3D/ TMO2	TXD1/SMOSI1/SSDA1/ MOSIA/SCL-DS	IRQ6/RTCOUT/ ADTRG0#
H4		P15		MTIOC0B/MTCLKB/ TMCI2	RXD1/SMISO1/SSCL1	IRQ5
H5		P55	WAIT#	MTIOC4D/TMO3		
H6		P54	ALE	MTIOC4B/TMCI1		
H7		PC7	A23/CS0#	MTIOC3A/TMO2/ MTCLKB	TXD8/SMOSI8/SSDA8/ MISOA	CACREF
H8		PC6	A22/CS1#	MTIOC3C/MTCLKA/ TMCI2	RXD8/SMISO8/SSCL8/ MOSIA	
H9		PB6	A14	MTIOC3D	RXD9/SMISO9/SSCL9	
H10		PB7	A15	MTIOC3B	TXD9/SMOSI9/SSDA9	
J1		P24	CS0#	MTIOC4A/MTCLKA/ TMRI1		
J2		P21		MTIOC1B/TMCI0	RXD0/SMISO0/SSCL0	
J3		P17		MTIOC3A/MTIOC3B/ TMO1/POE8#	SCK1/MISOA/ SDA-DS	IRQ7

Table 1.11 List of Pins and Pin Functions (100-Pin TFLGA) (3 / 3)

Pin No.	Power Supply, Clock, System Control	I/O Port	External Bus	Timers (MTU, TMR, POE)	Communications (SCIc, SCId, RSPI, RIIC)	Others
J4		P13		MTIOC0B/TMO3	SDA	IRQ3
J5		PH0				CACREF
J6		PH3		TMCI0		
J7		P50	WR0#/WR#			
J8		PC4	A20/CS3#	MTIOC3D/MTCLKC/ TMCI1/POE0#	SCK5/CTS8#/RTS8#/ SS8#/SSLA0	
J9		PC0	A16	MTIOC3C	CTS5#/RTS5#/SS5#/ SSLA1	
J10		PC1	A17	MTIOC3A	SCK5/SSLA2	
K1		P23		MTIOC3D/MTCLKD	CTS0#/RTS0#/SS0#	
K2		P22		MTIOC3B/MTCLKC/ TMO0	SCK0	
K3		P20		MTIOC1A/TMRI0	TXD0/SMOSI0/SSDA0	
K4		P14		MTIOC3A/MTCLKA/ TMRI2	CTS1#/RTS1#/SS1#	IRQ4
K5		PH2		TMRI0		IRQ1
K6		PH1		TMO0		IRQ0
K7		P51	WR1#/BC1#/WAIT#			
K8		PC5	A21/CS2#/WAIT#	MTIOC3B/MTCLKD/ TMRI2	SCK8/RSPCKA	
K9		PC3	A19	MTIOC4D	TXD5/SMOSI5/SSDA5	
K10		PC2	A18	MTIOC4B	RXD5/SMISO5/SSCL5/ SSLA3	

Note: • Pin names to which –DS is appended are for pins that can be used to trigger release from deep software standby mode.

Table 1.12 List of Pins and Pin Functions (100-Pin LQFP) (1 / 3)

Pin No.	Power Supply, Clock, System Control	I/O Port	External Bus	Timers (MTU, TMR, POE)	Communications (SCIc, SCId, RSPI, RIIC)	Others
1	VREFH					
2		P03				DA0
3	VREFL					
4		PJ3		MTIOC3C	CTS6#/RTS6#/SS6#	
5	VCL					
6		PJ1		MTIOC3A		
7	MD					FINED
8	XCIN					
9	XCOUT					
10	RES#					
11	XTAL	P37				
12	VSS					
13	EXTAL	P36				
14	VCC					
15		P35				NMI
16		P34		MTIOC0A/TMCI3/ POE2#	SCK6	IRQ4
17		P33		MTIOC0D/TMRI3/ POE3#	RXD6/SMISO6/SSCL6	IRQ3-DS
18		P32		MTIOC0C/TMO3	TXD6/SMOSI6/SSDA6	IRQ2-DS/RTCOUT/ RTCIC2
19		P31		MTIOC4D/TMCI2	CTS1#/RTS1#/SS1#	IRQ1-DS/RTCIC1
20		P30		MTIOC4B/TMRI3/ POE8#	RXD1/SMISO1/SSCL1	IRQ0-DS/RTCIC0
21		P27	CS3#	MTIOC2B/TMCI3	SCK1	
22		P26	CS2#	MTIOC2A/TMO1	TXD1/SMOSI1/SSDA1	
23		P25	CS1#	MTIOC4C/MTCLKB		ADTRG0#
24		P24	CS0#	MTIOC4A/MTCLKA/ TMRI1		
25		P23		MTIOC3D/MTCLKD	CTS0#/RTS0#/SS0#	
26		P22		MTIOC3B/MTCLKC/ TMO0	SCK0	
27		P21		MTIOC1B/TMCI0	RXD0/SMISO0/SSCL0	
28		P20		MTIOC1A/TMRI0	TXD0/SMOSI0/SSDA0	
29		P17		MTIOC3A/MTIOC3B/ TMO1/POE8#	SCK1/MISOA/ SDA-DS	IRQ7
30		P16		MTIOC3C/MTIOC3D/ TMO2	TXD1/SMOSI1/SSDA1/ MOSIA/SCL-DS	IRQ6/RTCOUT/ ADTRG0#
31		P15		MTIOC0B/MTCLKB/ TMCI2	RXD1/SMISO1/SSCL1	IRQ5
32		P14		MTIOC3A/MTCLKA/ TMRI2	CTS1#/RTS1#/SS1#	IRQ4
33		P13		MTIOC0B/TMO3	SDA	IRQ3
34		P12		TMCI1	SCL	IRQ2
35		PH3		TMCI0		
36		PH2		TMRI0		IRQ1
37		PH1		TMO0		IRQ0
38		PH0				CACREF
39		P55	WAIT#	MTIOC4D/TMO3		
40		P54	ALE	MTIOC4B/TMCI1		
41	BCLK	P53				

Table 1.12 List of Pins and Pin Functions (100-Pin LQFP) (2 / 3)

Pin No.	Power Supply, Clock, System Control	I/O Port	External Bus	Timers (MTU, TMR, POE)	Communications (SCIc, SCId, RSPI, RIIC)	Others
42		P52	RD#			
43		P51	WR1#/BC1#/WAIT#			
44		P50	WR0#/WR#			
45		PC7	A23/CS0#	MTIOC3A/TMO2/ MTCLKB	TXD8/SMOSI8/SSDA8/ MISOA	CACREF
46		PC6	A22/CS1#	MTIOC3C/MTCLKA/ TMCI2	RXD8/SMISO8/SSCL8/ MOSIA	
47		PC5	A21/CS2#/WAIT#	MTIOC3B/MTCLKD/ TMRI2	SCK8/RSPCKA	
48		PC4	A20/CS3#	MTIOC3D/MTCLKC/ TMCI1/POE0#	SCK5/CTS8#/RTS8#/ SS8#/SSLA0	
49		PC3	A19	MTIOC4D	TXD5/SMOSI5/SSDA5	
50		PC2	A18	MTIOC4B	RXD5/SMISO5/SSCL5/ SSLA3	
51		PC1	A17	MTIOC3A	SCK5/SSLA2	
52		PC0	A16	MTIOC3C	CTS5#/RTS5#/SS5#/ SSLA1	
53		PB7	A15	MTIOC3B	TXD9/SMOSI9/SSDA9	
54		PB6	A14	MTIOC3D	RXD9/SMISO9/SSCL9	
55		PB5	A13	MTIOC2A/MTIOC1B/ TMRI1/POE1#	SCK9	
56		PB4	A12		CTS9#/RTS9#/SS9#	
57		PB3	A11	MTIOC0A/MTIOC4A/ TMO0/POE3#	SCK6	
58		PB2	A10		CTS6#/RTS6#/SS6#	
59		PB1	A9	MTIOC0C/MTIOC4C/ TMCI0	TXD6/SMOSI6/SSDA6	IRQ4-DS
60	VCC					
61		PB0	A8	MTIC5W	RXD6/SMISO6/SSCL6/ RSPCKA	
62	VSS					
63		PA7	A7		MISOA	
64		PA6	A6	MTIC5V/MTCLKB/ TMCI3/POE2#	CTS5#/RTS5#/SS5#/ MOSIA	
65		PA5	A5		RSPCKA	
66		PA4	A4	MTIC5U/MTCLKA/ TMRI0	TXD5/SMOSI5/SSDA5/ SSLA0	IRQ5-DS/CVREFB1
67		PA3	A3	MTIOC0D/MTCLKD	RXD5/SMISO5/SSCL5	IRQ6-DS/CMPB1
68		PA2	A2		RXD5/SMISO5/SSCL5/ SSLA3	
69		PA1	A1	MTIOC0B/MTCLKC	SCK5/SSLA2	CVREFA
70		PA0	A0/BC0#	MTIOC4A	SSLA1	CACREF
71		PE7	D15[A15/D15]			IRQ7/AN015
72		PE6	D14[A14/D14]			IRQ6/AN014
73		PE5	D13[A13/D13]	MTIOC4C/MTIOC2B		IRQ5/AN013
74		PE4	D12[A12/D12]	MTIOC4D/MTIOC1A		AN012/CMPA2
75		PE3	D11[A11/D11]	MTIOC4B/POE8#	CTS12#/RTS12#/SS12#	AN011/CMPA1
76		PE2	D10[A10/D10]	MTIOC4A	RXD12/RXDX12/ SMISO12/SSCL12	IRQ7-DS/AN010/ CVREFB0
77		PE1	D9[A9/D9]	MTIOC4C	TXD12/TXDX12/SIOX12/ SMOSI12/SSDA12	AN009/CMPB0
78		PE0	D8[A8/D8]		SCK12	AN008
79		PD7	D7[A7/D7]	MTIC5U/POE0#		IRQ7

Table 1.12 List of Pins and Pin Functions (100-Pin LQFP) (3 / 3)

Pin No.	Power Supply, Clock, System Control	I/O Port	External Bus	Timers (MTU, TMR, POE)	Communications (SCIc, SCId, RSPI, RIIC)	Others
80		PD6	D6[A6/D6]	MTIC5V/POE1#		IRQ6
81		PD5	D5[A5/D5]	MTIC5W/POE2#		IRQ5
82		PD4	D4[A4/D4]	POE3#		IRQ4
83		PD3	D3[A3/D3]	POE8#		IRQ3
84		PD2	D2[A2/D2]	MTIOC4D		IRQ2
85		PD1	D1[A1/D1]	MTIOC4B		IRQ1
86		PD0	D0[A0/D0]			IRQ0
87		P47				AN007
88		P46				AN006
89		P45				AN005
90		P44				AN004
91		P43				AN003
92		P42				AN002
93		P41				AN001
94	VREFL0					
95		P40				AN000
96	VREFH0					
97	AVCC0					
98		P07				ADTRG0#
99	AVSS0					
100		P05				DA1

Note: • Pin names to which –DS is appended are for pins that can be used to trigger release from deep software standby mode.

Table 1.13 List of Pins and Pin Functions (80-Pin LQFP) (1 / 2)

Pin No.	Power Supply, Clock, System Control	I/O Port	Timers (MTU, TMR, POE)	Communications (SCIc, SCId, RSPI, RIIC)	Others
1	VREFH				
2		P03			DA0
3	VREFL				
4	VCL				
5		PJ1	MTIOC3A		
6	MD				FINED
7	XCIN				
8	XCOUT				
9	RES#				
10	XTAL	P37			
11	VSS				
12	EXTAL	P36			
13	VCC				
14		P35			NMI
15		P34	MTIOC0A/TMCI3/POE2#	SCK6	IRQ4
16		P32	MTIOC0C/TMO3	TXD6/SMOSI6/SSDA6	IRQ2-DS/RTCOUT/ RTCIC2
17		P31	MTIOC4D/TMCI2	CTS1#/RTS1#/SS1#	IRQ1-DS/RTCIC1
18		P30	MTIOC4B/TMRI3/POE8#	RXD1/SMISO1/SSCL1	IRQ0-DS/RTCIC0
19		P27	MTIOC2B/TMCI3	SCK1	
20		P26	MTIOC2A/TMO1	TXD1/SMOSI1/SSDA1	
21		P21	MTIOC1B/TMCI0	RXD0/SSCL0	
22		P20	MTIOC1A/TMRI0	TXD0/SSDA0	
23		P17	MTIOC3A/MTIOC3B/TMO1/ POE8#	SCK1/MISOA/ SDA-DS	IRQ7
24		P16	MTIOC3C/MTIOC3D/TMO2	TXD1/SMOSI1/SSDA1/MOSIA/ SCL-DS	IRQ6/RTCOUT/ ADTRG0#
25		P15	MTIOC0B/MTCLKB/TMCI2	RXD1/SMISO1/SSCL1	IRQ5
26		P14	MTIOC3A/MTCLKA/TMRI2	CTS1#/RTS1#/SS1#	IRQ4
27		P13	MTIOC0B/TMO3	SDA	IRQ3
28		P12	TMCI1	SCL	IRQ2
29		PH3	TMCI0		
30		PH2	TMRI0		IRQ1
31		PH1	TMO0		IRQ0
32		PH0			CACREF
33		P55	MTIOC4D/TMO3		
34		P54	MTIOC4B/TMCI1		
35		PC7	MTIOC3A/TMO2/MTCLKB	TXD8/SMOSI8/SSDA8/MISOA	CACREF
36		PC6	MTIOC3C/MTCLKA/TMCI2	RXD8/SMISO8/SSCL8/MOSIA	
37		PC5	MTIOC3B/MTCLKD/TMRI2	SCK8/RSPCKA	
38		PC4	MTIOC3D/MTCLKC/TMCI1/ POE0#	SCK5/CTS8#/RTS8#/SS8#/ SSLA0	
39		PC3	MTIOC4D	TXD5/SMOSI5/SSDA5	
40		PC2	MTIOC4B	RXD5/SMISO5/SSCL5/SSLA3	
41		PB7	MTIOC3B	TXD9/SMOSI9/SSDA9	
42		PB6	MTIOC3D	RXD9/SMISO9/SSCL9	
43		PB5	MTIOC2A/MTIOC1B/TMRI1/ POE1#	SCK9	
44		PB4		CTS9#/RTS9#/SS9#	

Table 1.13 List of Pins and Pin Functions (80-Pin LQFP) (2 / 2)

Pin No.	Power Supply, Clock, System Control	I/O Port	Timers (MTU, TMR, POE)	Communications (SCIc, SCId, RSPI, RIIC)	Others
45		PB3	MTIOC0A/MTIOC4A/TMO0/ POE3#	SCK6	
46		PB2		CTS6#/RTS6#/SS6#	
47		PB1	MTIOC0C/MTIOC4C/TMCI0	TXD6/SMOSI6/SSDA6	IRQ4-DS
48	VCC				
49		PB0	MTIC5W	RXD6/SMISO6/SSCL6/RSPCKA	
50	VSS				
51		PA6	MTIC5V/MTCLKB/TMCI3/ POE2#	CTS5#/RTS5#/SS5#/MOSIA	
52		PA5		RSPCKA	
53		PA4	MTIC5U/MTCLKA/TMRI0	TXD5/SMOSI5/SSDA5/SSLA0	IRQ5-DS/CVREFB1
54		PA3	MTIOC0D/MTCLKD	RXD5/SMISO5/SSCL5	IRQ6-DS/CMPB1
55		PA2		RXD5/SMISO5/SSCL5/SSLA3	
56		PA1	MTIOC0B/MTCLKC	SCK5/SSLA2	CVREFA
57		PA0	MTIOC4A	SSLA1	CACREF
58		PE5	MTIOC4C/MTIOC2B		IRQ5/AN013
59		PE4	MTIOC4D/MTIOC1A		AN012/CMPA2
60		PE3	MTIOC4B/POE8#	CTS12#/RTS12#/SS12#	AN011/CMPA1
61		PE2	MTIOC4A	RXD12/RXDX12/SMISO12/ SSCL12	IRQ7-DS/AN010/ CVREFB0
62		PE1	MTIOC4C	TXD12/TXDX12/SIOX12/ SMOSI12/SSDA12	AN009/CMPB0
63		PE0		SCK12	AN008
64		PD2	MTIOC4D		IRQ2
65		PD1	MTIOC4B		IRQ1
66		PD0			IRQ0
67		P47			AN007
68		P46			AN006
69		P45			AN005
70		P44			AN004
71		P43			AN003
72		P42			AN002
73		P41			AN001
74	VREFL0				
75		P40			AN000
76	VREFH0				
77	AVCC0				
78		P07			ADTRG0#
79	AVSS0				
80		P05			DA1

Note: • Pin names to which –DS is appended are for pins that can be used to trigger release from deep software standby mode.

Table 1.14 List of Pins and Pin Functions (69-Pin WLBGA) (1 / 2)

Pin No.	Power Supply, Clock, System Control	I/O Port	Timers (MTU, TMR, POE)	Communications (SCIc, SCId, RSPI, RIIC)	Others
A1	NC				
A2		PE2	MTIOC4A	RXD12/RXDX12/SMISO12/ SSCL12	IRQ7-DS/AN010/ CVREFB0
A3	VREFL				
A4	VREFH				
A5		P43			AN003
A6	VREFL0				
A7	AVCC0				
A8	AVSS0				
A9	AVSS0				
B1		PE5	MTIOC4C/MTIOC2B		IRQ5/AN013
B2		PE4	MTIOC4D/MTIOC1A		AN012/CMPA2
B3		PE3	MTIOC4B/POE8#	CTS12#/RTS12#/SS12#	AN011/CMPA1
B4		P46			AN006
B5		P44			AN004
B6		P41			AN001
B7	VREFH0				
B8		P05			DA1
B9	VCL				
C1		PA3	MTIOC0D/MTCLKD	RXD5/SMISO5/SSCL5	IRQ6-DS/CMPB1
C2		PA4	MTIC5U/MTCLKA/TMRI0	TXD5/SMOSI5/SSDA5/SSLA0	IRQ5-DS/CVREFB1
C3		PA0	MTIOC4A	SSLA1	CACREF
C4		PE1	MTIOC4C	TXD12/TXDX12/SIOX12/ SMOSI12/SSDA12	AN009/CMPB0
C5		PE0		SCK12	AN008
C6		P42			AN002
C7		P40			AN000
C8		P03			DA0
C9	XCIN				
D1		PA6	MTIC5V/MTCLKB/TMCI3/ POE2#	CTS5#/RTS5#/SS5#/MOSIA	
D2		PB0	MTIC5W	RXD6/SMISO6/SSCL6/ RSPCKA	
D3		PA1	MTIOC0B/MTCLKC	SCK5/SSLA2	CVREFA
D7	MD				FINED
D8	RES#				
D9	XCOUT				
E1	VSS				
E2		PB1	MTIOC0C/MTIOC4C/TMCI0	TXD6/SMOSI6/SSDA6	IRQ4-DS
E8	XTAL	P37			
E9	VSS				
F1	VCC				
F2		PB3	MTIOC0A/MTIOC4A/TMO0/ POE3#	SCK6	
F7		P31	MTIOC4D/TMCI2	CTS1#/RTS1#/SS1#	IRQ1-DS/RTCIC1
F8	EXTAL	P36			
F9	VCC				
G1		PB5	MTIOC2A/MTIOC1B/TMRI1/ POE1#	SCK9	
G2		PB6	MTIOC3D	RXD9/SMISO9/SSCL9	

Table 1.14 List of Pins and Pin Functions (69-Pin WLBGA) (2 / 2)

Pin No.	Power Supply, Clock, System Control	I/O Port	Timers (MTU, TMR, POE)	Communications (SCIc, SCId, RSPI, RIIC)	Others
G3	NC				
G4		P54	MTIOC4B/TMCI1		
G5		PH1	TMO0		IRQ0
G6		P14	MTIOC3A/MTCLKA/TMRI2	CTS1#/RTS1#/SS1#	IRQ4
G7		P27	MTIOC2B/TMCI3	SCK1	
G8		P32	MTIOC0C/TMO3	TXD6/SMOSI6/SSDA6	IRQ2-DS/RTCOUT/ RTCIC2
G9		P35			NMI
H1		PB7	MTIOC3B	TXD9/SMOSI9/SSDA9	
H2		PC3	MTIOC4D	TXD5/SMOSI5/SSDA5	
H3		PC5	MTIOC3B/MTCLKD/TMRI2	SCK8/RSPCKA	
H4		PC6	MTIOC3C/MTCLKA/TMCI2	RXD8/SMISO8/SSCL8/MOSIA	
H5		P55	MTIOC4D/TMO3		
H6		PH3	TMCI0		
H7		P17	MTIOC3A/MTIOC3B/TMO1/ POE8#	SCK1/MISOA/SDA-DS	IRQ7
H8		P26	MTIOC2A/TMO1	TXD1/SMOSI1/SSDA1	
H9		P30	MTIOC4B/TMRI3/POE8#	RXD1/SMISO1/SSCL1	IRQ0-DS/RTCIC0
J1	NC				
J2		PC2	MTIOC4B	RXD5/SMISO5/SSCL5/SSLA3	
J3		PC4	MTIOC3D/MTCLKC/TMCI1/ POE0#	SCK5/CTS8#/RTS8#/SS8#/ SSLA0	
J4		PC7	MTIOC3A/TMO2/MTCLKB	TXD8/SMOSI8/SSDA8/MISOA	CACREF
J5		PH0			CACREF
J6		PH2	TMRI0		IRQ1
J7		P15	MTIOC0B/MTCLKB/TMCI2	RXD1/SMISO1/SSCL1	IRQ5
J8		P16	MTIOC3C/MTIOC3D/TMO2	TXD1/SMOSI1/SSDA1/ MOSIA/SCL-DS	IRQ6/RTCOUT/ ADTRG0#
J9	NC				

Note: • Pin names to which –DS is appended are for pins that can be used to trigger release from deep software standby mode.
Note: • Leave the NC pin open.

Table 1.15 List of Pins and Pin Functions (64-Pin TFLGA) (1 / 2)

Pin No.	Power Supply, Clock, System Control	I/O Port	Timers (MTU, TMR, POE)	Communication (SCIc, SCId, RSPI, RIIC)	Others
A1		P05			DA1
A2	AVCC0				
A3	VREFH0				
A4	VREFL0				
A5	VREFH				
A6	VREFL				
A7		PE2	MTIOC4A	RXD12/RXDX12/SMISO12/ SSCL12	IRQ7-DS/AN010/ CVREFB0
A8		PE3	MTIOC4B/POE8#	CTS12#/RTS12#/SS12#	AN011/CMPA1
B1	VCL				
B2	AVSS0				
B3		P40			AN000
B4		P42			AN002
B5		P44			AN004
B6		P46			AN006
B7		PE1	MTIOC4C	TXD12/TXDX12/SIOX12/ SMOSI12/SSDA12	AN009/CMPB0
B8		PE4	MTIOC4D/MTIOC1A		AN012/CMPA2
C1	XCIN				
C2	MD				FINED
C3		P03			DA0
C4		P41			AN001
C5		P43			AN003
C6		PE0		SCK12	AN008
C7		PE5	MTIOC4C/MTIOC2B		IRQ5/AN013
C8		PA0	MTIOC4A	SSLA1	CACREF
D1	XCOUT				
D2	RES#				
D3		P27	MTIOC2B/TMCI3	SCK1	
D4		P14	MTIOC3A/MTCLKA/TMRI2	CTS1#/RTS1#/SS1#	IRQ4
D5		PA6	MTIC5V/MTCLKB/TMCI3/ POE2#	CTS5#/RTS5#/SS5#/MOSIA	
D6		PA4	MTIC5U/MTCLKA/TMRI0	TXD5/SMOSI5/SSDA5/SSLA0	IRQ5-DS/CVREFB1
D7		PA1	MTIOC0B/MTCLKC	SCK5/SSLA2	CVREFA
D8		PA3	MTIOC0D/MTCLKD	RXD5/SMISO5/SSCL5	IRQ6-DS/CMPB1
E1	VSS				
E2		P32	MTIOC0C/TMO3	TXD6/SMOSI6/SSDA6	IRQ2-DS/RTCOUT/ RTCIC2
E3		P30	MTIOC4B/TMRI3/POE8#	RXD1/SMISO1/SSCL1	IRQ0-DS/RTCIC0
E4		P16	MTIOC3C/MTIOC3D/TMO2	TXD1/SMOSI1/SSDA1/MOSIA/ SCL-DS	IRQ6/RTCOUT/ ADTRG0#
E5		PC4	MTIOC3D/MTCLKC/TMCI1/ POE0#	SCK5/CTS8#/RTS8#/SS8#/ SSLA0	
E6	VCC				
E7	VSS				
E8		PB0	MTIC5W	RXD6/SMISO6/SSCL6/RSPCKA	
F1	VCC				
F2		P35			NMI
F3		P31	MTIOC4D/TMCI2	CTS1#/RTS1#/SS1#	IRQ1-DS/RTCIC1
F4		PC5	MTIOC3B/MTCLKD/TMRI2	SCK8/RSPCKA	

Table 1.15 List of Pins and Pin Functions (64-Pin TFLGA) (2 / 2)

Pin No.	Power Supply, Clock, System Control	I/O Port	Timers (MTU, TMR, POE)	Communication (SCIc, SCId, RSPI, RIIC)	Others
F5		P15	MTIOC0B/MTCLKB/TMCI2	RXD1/SMISO1/SSCL1	IRQ5
F6		PB1	MTIOC0C/MTIOC4C/TMCI0	TXD6/SMOSI6/SSDA6	IRQ4-DS
F7		PB5	MTIOC2A/MTIOC1B/TMRI1/ POE1#	SCK9	
F8		PB3	MTIOC0A/MTIOC4A/TMO0/ POE3#	SCK6	
G1	EXTAL	P36			
G2		P26	MTIOC2A/TMO1	TXD1/SMOSI1/SSDA1	
G3		PH3	TMCI0		
G4		PH0			CACREF
G5		PC7	MTIOC3A/TMO2/MTCLKB	TXD8/SMOSI8/SSDA8/MISOA	CACREF
G6		PC6	MTIOC3C/MTCLKA/TMCI2	RXD8/SMISO8/SSCL8/MOSIA	
G7		PC3	MTIOC4D	TXD5/SMOSI5/SSDA5	
G8		PB6	MTIOC3D	RXD9/SMISO9/SSCL9	
H1	XTAL	P37			
H2		P17	MTIOC3A/MTIOC3B/TMO1/ POE8#	SCK1/MISOA/SDA-DS	IRQ7
H3		PH2	TMRI0		IRQ1
H4		PH1	TMO0		IRQ0
H5		P55	MTIOC4D/TMO3		
H6		P54	MTIOC4B/TMCI1		
H7		PC2	MTIOC4B	RXD5/SMISO5/SSCL5/SSLA3	
H8		PB7	MTIOC3B	TXD9/SMOSI9/SSDA9	

Note: • Pin names to which -DS is appended are for pins that can be used to trigger release from deep software standby mode.

Table 1.16 List of Pins and Pin Functions (64-Pin LQFP) (1 / 2)

Pin No.	Power Supply, Clock, System Control	I/O Port	Timers (MTU, TMR, POE)	Communication (SCIc, SCId, RSPI, RIIC)	Others
1		P03			DA0
2	VCL				
3	MD				FINED
4	XCIN				
5	XCOUT				
6	RES#				
7	XTAL	P37			
8	VSS				
9	EXTAL	P36			
10	VCC				
11		P35			NMI
12		P32	MTIOC0C/TMO3	TXD6/SMOSI6/SSDA6	IRQ2-DS/RTCOUT/ RTCIC2
13		P31	MTIOC4D/TMCI2	CTS1#/RTS1#/SS1#	IRQ1-DS/RTCIC1
14		P30	MTIOC4B/TMRI3/POE8#	RXD1/SMISO1/SSCL1	IRQ0-DS/RTCIC0
15		P27	MTIOC2B/TMCI3	SCK1	
16		P26	MTIOC2A/TMO1	TXD1/SMOSI1/SSDA1	
17		P17	MTIOC3A/MTIOC3B/TMO1/ POE8#	SCK1/MISOA/SDA-DS	IRQ7
18		P16	MTIOC3C/MTIOC3D/TMO2	TXD1/SMOSI1/SSDA1/MOSIA/ SCL-DS	IRQ6/RTCOUT/ ADTRG0#
19		P15	MTIOC0B/MTCLKB/TMCI2	RXD1/SMISO1/SSCL1	IRQ5
20		P14	MTIOC3A/MTCLKA/TMRI2	CTS1#/RTS1#/SS1#	IRQ4
21		PH3	TMCI0		
22		PH2	TMRI0		IRQ1
23		PH1	TMO0		IRQ0
24		PH0			CACREF
25		P55	MTIOC4D/TMO3		
26		P54	MTIOC4B/TMCI1		
27		PC7	MTIOC3A/TMO2/MTCLKB	TXD8/SMOSI8/SSDA8/MISOA	CACREF
28		PC6	MTIOC3C/MTCLKA/TMCI2	RXD8/SMISO8/SSCL8/MOSIA	
29		PC5	MTIOC3B/MTCLKD/TMRI2	SCK8/RSPCKA	
30		PC4	MTIOC3D/MTCLKC/TMCI1/ POE0#	SCK5/CTS8#/RTS8#/SS8#/ SSLA0	
31		PC3	MTIOC4D	TXD5/SMOSI5/SSDA5	
32		PC2	MTIOC4B	RXD5/SMISO5/SSCL5/SSLA3	
33		PB7	MTIOC3B	TXD9/SMOSI9/SSDA9	
34		PB6	MTIOC3D	RXD9/SMISO9/SSCL9	
35		PB5	MTIOC2A/MTIOC1B/TMRI1/ POE1#	SCK9	
36		PB3	MTIOC0A/MTIOC4A/TMO0/ POE3#	SCK6	
37		PB1	MTIOC0C/MTIOC4C/TMCI0	TXD6/SMOSI6/SSDA6	IRQ4-DS
38	VCC				
39		PB0	MTIC5W	RXD6/SMISO6/SSCL6/RSPCKA	
40	VSS				
41		PA6	MTIC5V/MTCLKB/TMCI3/ POE2#	CTS5#/RTS5#/SS5#/MOSIA	
42		PA4	MTIC5U/MTCLKA/TMRI0	TXD5/SMOSI5/SSDA5/SSLA0	IRQ5-DS/CVREFB1
43		PA3	MTIOC0D/MTCLKD	RXD5/SMISO5/SSCL5	IRQ6-DS/CMPB1

Table 1.16 List of Pins and Pin Functions (64-Pin LQFP) (2 / 2)

Pin No.	Power Supply, Clock, System Control	I/O Port	Timers (MTU, TMR, POE)	Communication (SCIc, SCId, RSPI, RIIC)	Others
44		PA1	MTIOC0B/MTCLKC	SCK5/SSLA2	CVREFA
45		PA0	MTIOC4A	SSLA1	CACREF
46		PE5	MTIOC4C/MTIOC2B		IRQ5/AN013
47		PE4	MTIOC4D/MTIOC1A		AN012/CMPA2
48		PE3	MTIOC4B/POE8#	CTS12#/RTS12#/SS12#	AN011/CMPA1
49		PE2	MTIOC4A	RXD12/RXDX12/SMISO12/ SSCL12	IRQ7-DS/AN010/ CVREFB0
50		PE1	MTIOC4C	TXD12/TXDX12/SIOX12/ SMOSI12/SSDA12	AN009/CMPB0
51		PE0		SCK12	AN008
52	VREFL				
53		P46			AN006
54	VREFH				
55		P44			AN004
56		P43			AN003
57		P42			AN002
58		P41			AN001
59	VREFL0				
60		P40			AN000
61	VREFH0				
62	AVCC0				
63		P05			DA1
64	AVSS0				

Note: • Pin names to which –DS is appended are for pins that can be used to trigger release from deep software standby mode.

Table 1.17 List of Pins and Pin Functions (48-Pin LQFP) (1 / 2)

Pin No.	Power Supply, Clock, System Control	I/O Port	Timers (MTU, TMR, POE)	Communication (SCIc, SCId, RSPI, RIIC)	Others
1	VCL				
2	MD				FINED
3	RES#				
4	XTAL	P37			
5	VSS				
6	EXTAL	P36			
7	VCC				
8		P35			NMI
9		P31	MTIOC4D/TMCI2	CTS1#/RTS1#/SS1#	IRQ1-DS
10		P30	MTIOC4B/TMRI3/POE8#	RXD1/SMISO1/SSCL1	IRQ0-DS
11		P27	MTIOC2B/TMCI3	SCK1	
12		P26	MTIOC2A/TMO1	TXD1/SMOSI1/SSDA1	
13		P17	MTIOC3A/MTIOC3B/TMO1/ POE8#	SCK1/MISOA/SDA-DS	IRQ7
14		P16	MTIOC3C/MTIOC3D/TMO2	TXD1/SMOSI1/SSDA1/MOSIA/ SCL-DS	IRQ6/ADTRG0#
15		P15	MTIOC0B/MTCLKB/TMCI2	RXD1/SMISO1/SSCL1	IRQ5
16		P14	MTIOC3A/MTCLKA/TMRI2	CTS1#/RTS1#/SS1#	IRQ4
17		PH3	TMCI0		
18		PH2	TMRI0		IRQ1
19		PH1	TMO0		IRQ0
20		PH0			CACREF
21		PC7	MTIOC3A/TMO2/MTCLKB	TXD8/SMOSI8/SSDA8/MISOA	CACREF
22		PC6	MTIOC3C/MTCLKA/TMCI2	RXD8/SMISO8/SSCL8/MOSIA	
23		PC5	MTIOC3B/MTCLKD/TMRI2	SCK8/RSPCKA	
24		PC4	MTIOC3D/MTCLKC/TMCI1/ POE0#	SCK5/CTS8#/RTS8#/SS8#/ SSLA0	
25		PB5	MTIOC2A/MTIOC1B/TMRI1/ POE1#		
26		PB3	MTIOC0A/MTIOC4A/TMO0/ POE3#	SCK6	
27		PB1	MTIOC0C/MTIOC4C/TMCI0	TXD6/SMOSI6/SSDA6	IRQ4-DS
28	VCC				
29		PB0	MTIC5W	RXD6/SMISO6/SSCL6/RSPCKA	
30	VSS				
31		PA6	MTIC5V/MTCLKB/TMCI3/ POE2#	CTS5#/RTS5#/SS5#/MOSIA	
32		PA4	MTIC5U/MTCLKA/TMRI0	TXD5/SMOSI5/SSDA5/SSLA0	IRQ5-DS/CVREFB1
33		PA3	MTIOC0D/MTCLKD	RXD5/SMISO5/SSCL5	IRQ6-DS/CMPB1
34		PA1	MTIOC0B/MTCLKC	SCK5/SSLA2	CVREFA
35		PE4	MTIOC4D/MTIOC1A		AN012/CMPA2
36		PE3	MTIOC4B/POE8#	CTS12#/RTS12#	AN011/CMPA1
37		PE2	MTIOC4A	RXD12/RXDX12/SSCL12	IRQ7-DS/AN010/ CVREFB0
38		PE1	MTIOC4C	TXD12/TXDX12/SIOX12/ SSDA12	AN009/CMPB0
39	VREFL				
40		P46			AN006
41	VREFH				
42		P42			AN002
43		P41			AN001

Table 1.17 List of Pins and Pin Functions (48-Pin LQFP) (2 / 2)

Pin No.	Power Supply, Clock, System Control	I/O Port	Timers (MTU, TMR, POE)	Communication (SCIc, SCId, RSPI, RIIC)	Others
44	VREFL0				
45		P40			AN000
46	VREFH0				
47	AVCC0				
48	AVSS0				

Note: • Pin names to which –DS is appended are for pins that can be used to trigger release from deep software standby mode.

2. CPU

Figure 2.1 shows the register set of the CPU.

General-purpose register

b31 b0

R0 (SP) *1
R1
R2
R3
R4
R5
R6
R7
R8
R9
R10
R11
R12
R13
R14
R15

Control register

b31 b0

ISP	(Interrupt stack pointer)
USP	(User stack pointer)
INTB	(Interrupt table register)
PC	(Program counter)
PSW	(Processor status word)
BPC	(Backup PC)
BPSW	(Backup PSW)
FINTV	(Fast interrupt vector register)

DSP instruction register

b63 b0

ACC (Accumulator)

Note 1. The stack pointer (SP) can be the interrupt stack pointer (ISP) or user stack pointer (USP), according to the value of the U bit in the PSW register.

Figure 2.1 Register Set of the CPU

2.1 General-Purpose Registers (R0 to R15)

This CPU has sixteen general-purpose registers (R0 to R15). R1 to R15 can be used as data registers or address registers. R0, a general-purpose register, also functions as the stack pointer (SP). The stack pointer is switched to operate as the interrupt stack pointer (ISP) or user stack pointer (USP) by the value of the stack pointer select bit (U) in the processor status word (PSW).

2.2 Control Registers

(1) Interrupt Stack Pointer (ISP)/User Stack Pointer (USP)

The stack pointer (SP) can be either of two types, the interrupt stack pointer (ISP) or the user stack pointer (USP). Whether the stack pointer operates as the ISP or USP depends on the value of the stack pointer select bit (U) in the processor status word (PSW).
Set the ISP or USP to a multiple of four, as this reduces the numbers of cycles required to execute interrupt sequences and instructions entailing stack manipulation.

(2) Interrupt Table Register (INTB)

The interrupt table register (INTB) specifies the address where the relocatable vector table starts.

(3) Program Counter (PC)

The program counter (PC) indicates the address of the instruction being executed.

(4) Processor Status Word (PSW)

The processor status word (PSW) indicates the results of instruction execution or the state of the CPU.

(5) Backup PC (BPC)

The backup PC (BPC) is provided to speed up response to interrupts.
After a fast interrupt has been generated, the contents of the program counter (PC) are saved in the BPC register.

(6) Backup PSW (BPSW)

The backup PSW (BPSW) is provided to speed up response to interrupts.
After a fast interrupt has been generated, the contents of the processor status word (PSW) are saved in the BPSW. The allocation of bits in the BPSW corresponds to that in the PSW.

(7) Fast Interrupt Vector Register (FINTV)

The fast interrupt vector register (FINTV) is provided to speed up response to interrupts.
The FINTV register specifies a branch destination address when a fast interrupt has been generated.

2.3 Register Associated with DSP Instructions

(1) Accumulator (ACC)

The accumulator (ACC) is a 64-bit register used for DSP instructions. The accumulator is also used for the multiply and multiply-and-accumulate instructions; EMUL, EMULU, MUL, and RMPA, in which case the prior value in the accumulator is modified by execution of the instruction.
Use the MVTACHI and MVTACLO instructions for writing to the accumulator. The MVTACHI and MVTACLO instructions write data to the higher-order 32 bits (bits 63 to 32) and the lower-order 32 bits (bits 31 to 0), respectively.
Use the MVFACHI and MVFACMI instructions for reading data from the accumulator. The MVFACHI and MVFACMI instructions read data from the higher-order 32 bits (bits 63 to 32) and the middle 32 bits (bits 47 to 16), respectively.

3. Address Space

3.1 Address Space

This LSI has a 4-Gbyte address space, consisting of the range of addresses from 0000 0000h to FFFF FFFFh. That is, linear access to an address space of up to 4 Gbytes is possible, and this contains both program and data areas.
Figure 3.1 shows the memory maps in the respective operating modes. Accessible areas will differ according to the operating mode and states of control bits.

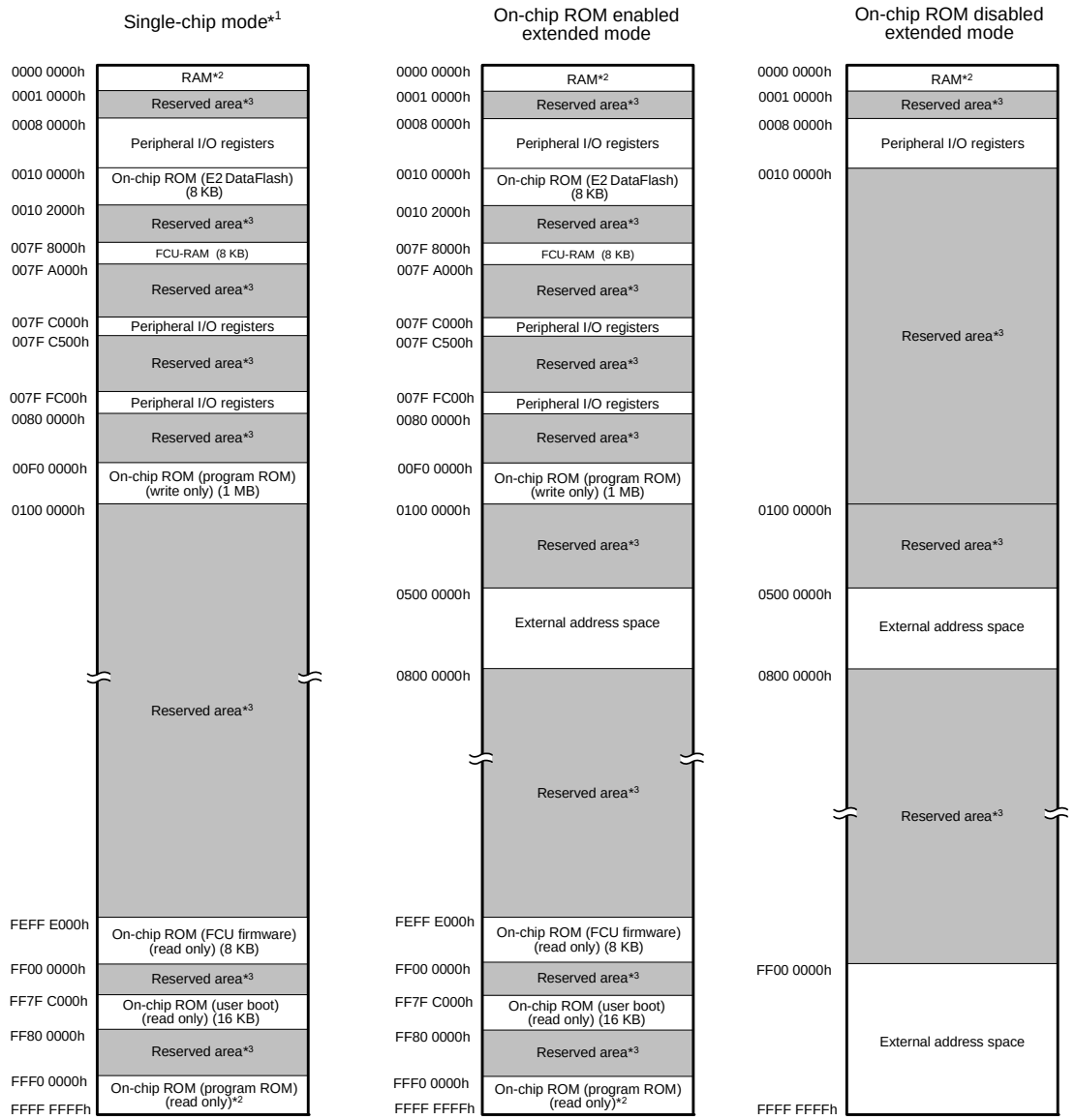

Note 1. The address space in boot mode and user boot mode is the same as the address space in single-chip mode.
Note 2. The capacity of ROM/RAM differs depending on the products.

ROM (bytes)		RAM (bytes)	
Capacity	**Address**	**Capacity**	**Address**
1 M	FFF0 0000h to FFFF FFFFh	96 K	0000 0000h to 0001 7FFFh
768 K	FFF4 0000h to FFFF FFFFh		
512 K	FFF8 0000h to FFFF FFFFh	64 K	0000 0000h to 0000 FFFFh
384 K	FFFA 0000h to FFFF FFFFh		
256 K	FFFC 0000h to FFFF FFFFh	32 K	0000 0000h to 0000 7FFFh
128 K	FFFE 0000h to FFFF FFFFh	20 K	0000 0000h to 0000 4FFFh
96 K	FFFE 8000h to FFFF FFFFh	16 K	0000 0000h to 0000 3FFFh
64 K	FFFF 0000h to FFFF FFFFh	12 K	0000 0000h to 0000 2FFFh

Note:•See Table 1.3 to Table 1.7 List of Products, for the product type name.

Note 3. Reserved areas should not be accessed.

Figure 3.1 Memory Map in Each Operating Mode

3.2 External Address Space

The external address space is divided into up to four CS areas (CS0 to CS3), each corresponding to the CSn# signal output from a CSn# (n = 0 to 3) pin.

Figure 3.2 shows the address ranges corresponding to the individual CS areas (CS0 to CS3) in on-chip ROM disabled extended mode.

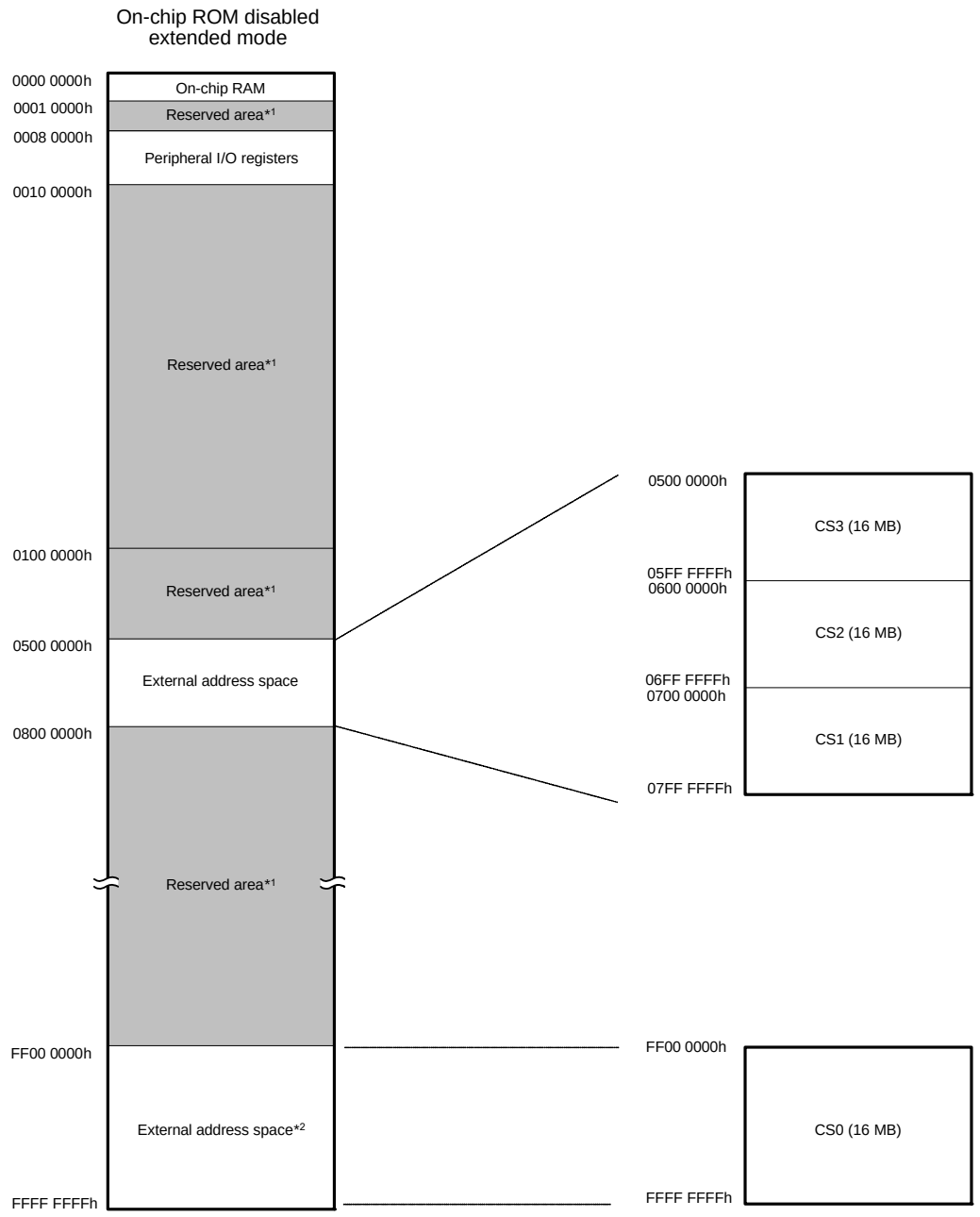

Note 1. Reserved areas should not be accessed.

Note 2. The CS0 area is disabled in on-chip ROM enabled extended mode. In this mode, the address space for addresses above 0800 0000h is as shown in figure on this section “Memory Map in Each Operating Mode”.

Figure 3.2 Correspondence between External Address Spaces and CS Areas (In On-Chip ROM Disabled Extended Mode)

4. I/O Registers

This section gives information on the on-chip I/O register addresses and bit configuration. The information is given as shown below. Notes on writing to registers are also given at the end.

(1) I/O register addresses (address order)

- Registers are listed from the lower allocation addresses.
- Registers are classified according to module symbols.
- Numbers of cycles for access indicate numbers of cycles of the given base clock.
- Among the internal I/O register area, addresses not listed in the list of registers are reserved. Reserved addresses must not be accessed. Do not access these addresses; otherwise, the operation when accessing these bits and subsequent operations cannot be guaranteed.

(2) Notes on writing to I/O registers

When writing to an I/O register, the CPU starts executing the subsequent instruction before completing I/O register write. This may cause the subsequent instruction to be executed before the post-update I/O register value is reflected on the operation.
As described in the following examples, special care is required for the cases in which the subsequent instruction must be executed after the post-update I/O register value is actually reflected.

[Examples of cases requiring special care]

- The subsequent instruction must be executed while an interrupt request is disabled with the IENj bit in IERn of the ICU (interrupt request enable bit) cleared to 0.
- A WAIT instruction is executed immediately after the preprocessing for causing a transition to the low power consumption state.

In the above cases, after writing to an I/O register, wait until the write operation is completed using the following procedure and then execute the subsequent instruction.

(a) Write to an I/O register.
(b) Read the value from the I/O register to a general register.
(c) Execute the operation using the value read.
(d) Execute the subsequent instruction.

[Instruction examples]

- Byte-size I/O registers

```
MOV.L  #SFR_ADDR, R1
MOV.B  #SFR_DATA, [R1]
CMP    [R1].UB, R1
;; Next process
```

- Word-size I/O registers

```
MOV.L  #SFR_ADDR, R1
MOV.W  #SFR_DATA, [R1]
CMP    [R1].W, R1
;; Next process
```

- Longword-size I/O registers

```
MOV.L  #SFR_ADDR, R1
MOV.L  #SFR_DATA, [R1]
CMP    [R1].L, R1
;; Next process
```

If multiple registers are written to and a subsequent instruction should be executed after the write operations are entirely completed, only read the I/O register that was last written to and execute the operation using the value; it is not necessary to read or execute operation for all the registers that were written to.

(3) Number of Access Cycles to I/O Registers

For numbers of clock cycles for access to I/O registers, see Table 4.1, List of I/O Registers (Address Order).
The number of access cycles to I/O registers is obtained by following equation.*1

Number of access cycles to I/O registers = Number of bus cycles for internal main bus 1 +
Number of divided clock synchronization cycles +
Number of bus cycles for internal peripheral bus 1 to 6

The number of bus cycles of internal peripheral bus 1 to 6 differs according to the register to be accessed.
When peripheral functions connected to internal peripheral bus 2 to 6 or registers for the external bus control unit (except for bus error related registers) are accessed, the number of divided clock synchronization cycles is added.
The number of divided clock synchronization cycles differs depending on the frequency ratio between ICLK and PCLK (or FCLK, BCLK) or bus access timing.
In the peripheral function unit, when the frequency ratio of ICLK is equal to or greater than that of PCLK (or FCLK), the sum of the number of bus cycles for internal main bus 1 and the number of the divided clock synchronization cycles will be one cycle of PCLK (or FCLK) at a maximum. Therefore, one PCLK (or FCLK) has been added to the number of access cycles shown in Table 4.1.
When the frequency ratio of ICLK is lower than that of PCLK (or FCLK), the subsequent bus access is started from the ICLK cycle following the completion of the access to the peripheral functions. Therefore, the access cycles are described on an ICLK basis.
In the external bus control unit, the sum of the number of bus cycles for internal main bus 1 and the number of divided clock synchronization cycles will be one cycle of BCLK at a maximum. Therefore, one BCLK is added to the number of access cycles shown in Table 4.1.

Note 1. This applies to the number of cycles when the access from the CPU does not conflict with the instruction fetching to the external memory or bus access from the different bus master (DMAC or DTC).

4.1 I/O Register Addresses (Address Order)

Table 4.1 List of I/O Registers (Address Order) (1 / 29)

Address	Module Symbol	Register Name	Register Symbol	Number of Bits	Access Size	Number of Access Cycles ICLK ≥ PCLK	Number of Access Cycles ICLK < PCLK
0008 0000h	SYSTEM	Mode monitor register	MDMONR	16	16	3 ICLK	
0008 0002h	SYSTEM	Mode status register	MDSR	16	16	3 ICLK	
0008 0006h	SYSTEM	System control register 0	SYSCR0	16	16	3 ICLK	
0008 0008h	SYSTEM	System control register 1	SYSCR1	16	16	3 ICLK	
0008 000Ch	SYSTEM	Standby control register	SBYCR	16	16	3 ICLK	
0008 0010h	SYSTEM	Module stop control register A	MSTPCRA	32	32	3 ICLK	
0008 0014h	SYSTEM	Module stop control register B	MSTPCRB	32	32	3 ICLK	
0008 0018h	SYSTEM	Module stop control register C	MSTPCRC	32	32	3 ICLK	
0008 0020h	SYSTEM	System clock control register	SCKCR	32	32	3 ICLK	
0008 0026h	SYSTEM	System clock control register 3	SCKCR3	16	16	3 ICLK	
0008 0028h	SYSTEM	PLL control register	PLLCR	16	16	3 ICLK	
0008 002Ah	SYSTEM	PLL control register 2	PLLCR2	8	8	3 ICLK	
0008 0030h	SYSTEM	External bus clock control register	BCKCR	8	8	3 ICLK	
0008 0032h	SYSTEM	Main clock oscillator control register	MOSCCR	8	8	3 ICLK	
0008 0033h	SYSTEM	Sub-clock oscillator control register	SOSCCR	8	8	3 ICLK	
0008 0034h	SYSTEM	Low-speed on-chip oscillator control register	LOCOCR	8	8	3 ICLK	
0008 0035h	SYSTEM	IWDT-dedicated on-chip oscillator control register	ILOCOCR	8	8	3 ICLK	
0008 0036h	SYSTEM	High-speed on-chip oscillator control register	HOCOCR	8	8	3 ICLK	
0008 0037h	SYSTEM	High-speed on-chip oscillator control register 2	HOCOCR2	8	8	3 ICLK	
0008 0040h	SYSTEM	Oscillation stop detection control register	OSTDCR	8	8	3 ICLK	
0008 0041h	SYSTEM	Oscillation stop detection status register	OSTDSR	8	8	3 ICLK	
0008 00A0h	SYSTEM	Operating power control register	OPCCR	8	8	3 ICLK	
0008 00A1h	SYSTEM	Sleep mode return clock source switching register	RSTCKCR	8	8	3 ICLK	
0008 00A2h	SYSTEM	Main clock oscillator wait control register	MOSCWTCR	8	8	3 ICLK	
0008 00A3h	SYSTEM	Sub-clock oscillator wait control register	SOSCWTCR	8	8	3 ICLK	
0008 00A6h	SYSTEM	PLL wait control register	PLLWTCR	8	8	3 ICLK	
0008 00A9h	SYSTEM	HOCO wait control register 2	HOCOWTCR2	8	8	3 ICLK	
0008 00C0h	SYSTEM	Reset status register 2	RSTSR2	8	8	3 ICLK	
0008 00C2h	SYSTEM	Software reset register	SWRR	16	16	3 ICLK	
0008 00E0h	SYSTEM	Voltage monitoring 1 circuit/comparator A1 control register 1	LVD1CR1	8	8	3 ICLK	
0008 00E1h	SYSTEM	Voltage monitoring 1 circuit/comparator A1 status register	LVD1SR	8	8	3 ICLK	
0008 00E2h	SYSTEM	Voltage monitoring 2 circuit/comparator A2 control register 1	LVD2CR1	8	8	3 ICLK	
0008 00E3h	SYSTEM	Voltage monitoring 2 circuit/comparator A2 status register	LVD2SR	8	8	3 ICLK	
0008 0200h	SYSTEM	Voltage regulator control register	VRCR	8	8	3 ICLK	
0008 03FEh	SYSTEM	Protect register	PRCR	16	16	3 ICLK	
0008 1300h	BSC	Bus error status clear register	BERCLR	8	8	2 ICLK	
0008 1304h	BSC	Bus error monitoring enable register	BEREN	8	8	2 ICLK	
0008 1308h	BSC	Bus error status register 1	BERSR1	8	8	2 ICLK	
0008 130Ah	BSC	Bus error status register 2	BERSR2	16	16	2 ICLK	
0008 1310h	BSC	Bus priority control register	BUSPRI	16	16	2 ICLK	
0008 2000h	DMAC0	DMA source address register	DMSAR	32	32	2 ICLK	
0008 2004h	DMAC0	DMA destination address register	DMDAR	32	32	2 ICLK	
0008 2008h	DMAC0	DMA transfer count register	DMCRA	32	32	2 ICLK	
0008 200Ch	DMAC0	DMA block transfer count register	DMCRB	16	16	2 ICLK	
0008 2010h	DMAC0	DMA transfer mode register	DMTMD	16	16	2 ICLK	
0008 2013h	DMAC0	DMA interrupt setting register	DMINT	8	8	2 ICLK	
0008 2014h	DMAC0	DMA address mode register	DMAMD	16	16	2 ICLK	
0008 2018h	DMAC0	DMA offset register	DMOFR	32	32	2 ICLK	
0008 201Ch	DMAC0	DMA transfer enable register	DMCNT	8	8	2 ICLK	

Table 4.1 List of I/O Registers (Address Order) (2 / 29)

Address	Module Symbol	Register Name	Register Symbol	Number of Bits	Access Size	Number of Access Cycles ICLK ≥ PCLK	Number of Access Cycles ICLK < PCLK
0008 201Dh	DMAC0	DMA software start register	DMREQ	8	8	2 ICLK	
0008 201Eh	DMAC0	DMA status register	DMSTS	8	8	2 ICLK	
0008 201Fh	DMAC0	DMA activation source flag control register	DMCSL	8	8	2 ICLK	
0008 2040h	DMAC1	DMA source address register	DMSAR	32	32	2 ICLK	
0008 2044h	DMAC1	DMA destination address register	DMDAR	32	32	2 ICLK	
0008 2048h	DMAC1	DMA transfer count register	DMCRA	32	32	2 ICLK	
0008 204Ch	DMAC1	DMA block transfer count register	DMCRB	16	16	2 ICLK	
0008 2050h	DMAC1	DMA transfer mode register	DMTMD	16	16	2 ICLK	
0008 2053h	DMAC1	DMA interrupt setting register	DMINT	8	8	2 ICLK	
0008 2054h	DMAC1	DMA address mode register	DMAMD	16	16	2 ICLK	
0008 205Ch	DMAC1	DMA transfer enable register	DMCNT	8	8	2 ICLK	
0008 205Dh	DMAC1	DMA software start register	DMREQ	8	8	2 ICLK	
0008 205Eh	DMAC1	DMA status register	DMSTS	8	8	2 ICLK	
0008 205Fh	DMAC1	DMA activation source flag control register	DMCSL	8	8	2 ICLK	
0008 2080h	DMAC2	DMA source address register	DMSAR	32	32	2 ICLK	
0008 2084h	DMAC2	DMA destination address register	DMDAR	32	32	2 ICLK	
0008 2088h	DMAC2	DMA transfer count register	DMCRA	32	32	2 ICLK	
0008 208Ch	DMAC2	DMA block transfer count register	DMCRB	16	16	2 ICLK	
0008 2090h	DMAC2	DMA transfer mode register	DMTMD	16	16	2 ICLK	
0008 2093h	DMAC2	DMA interrupt setting register	DMINT	8	8	2 ICLK	
0008 2094h	DMAC2	DMA address mode register	DMAMD	16	16	2 ICLK	
0008 209Ch	DMAC2	DMA transfer enable register	DMCNT	8	8	2 ICLK	
0008 209Dh	DMAC2	DMA software start register	DMREQ	8	8	2 ICLK	
0008 209Eh	DMAC2	DMA status register	DMSTS	8	8	2 ICLK	
0008 209Fh	DMAC2	DMA activation source flag control register	DMCSL	8	8	2 ICLK	
0008 20C0h	DMAC3	DMA source address register	DMSAR	32	32	2 ICLK	
0008 20C4h	DMAC3	DMA destination address register	DMDAR	32	32	2 ICLK	
0008 20C8h	DMAC3	DMA transfer count register	DMCRA	32	32	2 ICLK	
0008 20CCh	DMAC3	DMA block transfer count register	DMCRB	16	16	2 ICLK	
0008 20D0h	DMAC3	DMA transfer mode register	DMTMD	16	16	2 ICLK	
0008 20D3h	DMAC3	DMA interrupt setting register	DMINT	8	8	2 ICLK	
0008 20D4h	DMAC3	DMA address mode register	DMAMD	16	16	2 ICLK	
0008 20DCh	DMAC3	DMA transfer enable register	DMCNT	8	8	2 ICLK	
0008 20DDh	DMAC3	DMA software start register	DMREQ	8	8	2 ICLK	
0008 20DEh	DMAC3	DMA status register	DMSTS	8	8	2 ICLK	
0008 20DFh	DMAC3	DMA activation source flag control register	DMCSL	8	8	2 ICLK	
0008 2200h	DMAC	DMA module activation register	DMAST	8	8	2 ICLK	
0008 2400h	DTC	DTC control register	DTCCR	8	8	2 ICLK	
0008 2404h	DTC	DTC vector base register	DTCVBR	32	32	2 ICLK	
0008 2408h	DTC	DTC address mode register	DTCADMOD	8	8	2 ICLK	
0008 240Ch	DTC	DTC module start register	DTCST	8	8	2 ICLK	
0008 240Eh	DTC	DTC status register	DTCSTS	16	16	2 ICLK	
0008 3002h	BSC	CS0 mode register	CS0MOD	16	16	1, 2 BCLK	
0008 3004h	BSC	CS0 wait control register 1	CS0WCR1	32	32	1, 2 BCLK	
0008 3008h	BSC	CS0 wait control register 2	CS0WCR2	32	32	1, 2 BCLK	
0008 3012h	BSC	CS1 mode register	CS1MOD	16	16	1, 2 BCLK	
0008 3014h	BSC	CS1 wait control register 1	CS1WCR1	32	32	1, 2 BCLK	
0008 3018h	BSC	CS1 wait control register 2	CS1WCR2	32	32	1, 2 BCLK	
0008 3022h	BSC	CS2 mode register	CS2MOD	16	16	1, 2 BCLK	
0008 3024h	BSC	CS2 wait control register 1	CS2WCR1	32	32	1, 2 BCLK	
0008 3028h	BSC	CS2 wait control register 2	CS2WCR2	32	32	1, 2 BCLK	

Table 4.1 List of I/O Registers (Address Order) (3 / 29)

Address	Module Symbol	Register Name	Register Symbol	Number of Bits	Access Size	Number of Access Cycles ICLK ≥ PCLK	Number of Access Cycles ICLK < PCLK
0008 3032h	BSC	CS3 mode register	CS3MOD	16	16	1, 2 BCLK	
0008 3034h	BSC	CS3 wait control register 1	CS3WCR1	32	32	1, 2 BCLK	
0008 3038h	BSC	CS3 wait control register 2	CS3WCR2	32	32	1, 2 BCLK	
0008 3802h	BSC	CS0 control register	CS0CR	16	16	1, 2 BCLK	
0008 380Ah	BSC	CS0 recovery cycle register	CS0REC	16	16	1, 2 BCLK	
0008 3812h	BSC	CS1 control register	CS1CR	16	16	1, 2 BCLK	
0008 381Ah	BSC	CS1 recovery cycle register	CS1REC	16	16	1, 2 BCLK	
0008 3822h	BSC	CS2 control register	CS2CR	16	16	1, 2 BCLK	
0008 382Ah	BSC	CS2 recovery cycle register	CS2REC	16	16	1, 2 BCLK	
0008 3832h	BSC	CS3 control register	CS3CR	16	16	1, 2 BCLK	
0008 383Ah	BSC	CS3 recovery cycle register	CS3REC	16	16	1, 2 BCLK	
0008 3880h	BSC	CS recovery cycle insertion enable register	CSRECEN	16	16	1, 2 BCLK	
0008 7010h	ICU	Interrupt request register 016	IR016	8	8	2 ICLK	
0008 7015h	ICU	Interrupt request register 021	IR021	8	8	2 ICLK	
0008 7017h	ICU	Interrupt request register 023	IR023	8	8	2 ICLK	
0008 701Bh	ICU	Interrupt request register 027	IR027	8	8	2 ICLK	
0008 701Ch	ICU	Interrupt request register 028	IR028	8	8	2 ICLK	
0008 701Dh	ICU	Interrupt request register 029	IR029	8	8	2 ICLK	
0008 701Eh	ICU	Interrupt request register 030	IR030	8	8	2 ICLK	
0008 701Fh	ICU	Interrupt request register 031	IR031	8	8	2 ICLK	
0008 7020h	ICU	Interrupt request register 032	IR032	8	8	2 ICLK	
0008 7021h	ICU	Interrupt request register 033	IR033	8	8	2 ICLK	
0008 7022h	ICU	Interrupt request register 034	IR034	8	8	2 ICLK	
0008 702Ch	ICU	Interrupt request register 044	IR044	8	8	2 ICLK	
0008 702Dh	ICU	Interrupt request register 045	IR045	8	8	2 ICLK	
0008 702Eh	ICU	Interrupt request register 046	IR046	8	8	2 ICLK	
0008 702Fh	ICU	Interrupt request register 047	IR047	8	8	2 ICLK	
0008 7039h	ICU	Interrupt request register 057	IR057	8	8	2 ICLK	
0008 703Ah	ICU	Interrupt request register 058	IR058	8	8	2 ICLK	
0008 703Bh	ICU	Interrupt request register 059	IR059	8	8	2 ICLK	
0008 703Fh	ICU	Interrupt request register 063	IR063	8	8	2 ICLK	
0008 7040h	ICU	Interrupt request register 064	IR064	8	8	2 ICLK	
0008 7041h	ICU	Interrupt request register 065	IR065	8	8	2 ICLK	
0008 7042h	ICU	Interrupt request register 066	IR066	8	8	2 ICLK	
0008 7043h	ICU	Interrupt request register 067	IR067	8	8	2 ICLK	
0008 7044h	ICU	Interrupt request register 068	IR068	8	8	2 ICLK	
0008 7045h	ICU	Interrupt request register 069	IR069	8	8	2 ICLK	
0008 7046h	ICU	Interrupt request register 070	IR070	8	8	2 ICLK	
0008 7047h	ICU	Interrupt request register 071	IR071	8	8	2 ICLK	
0008 7058h	ICU	Interrupt request register 088	IR088	8	8	2 ICLK	
0008 7059h	ICU	Interrupt request register 089	IR089	8	8	2 ICLK	
0008 705Ch	ICU	Interrupt request register 092	IR092	8	8	2 ICLK	
0008 705Dh	ICU	Interrupt request register 093	IR093	8	8	2 ICLK	
0008 7066h	ICU	Interrupt request register 102	IR102	8	8	2 ICLK	
0008 7067h	ICU	Interrupt request register 103	IR103	8	8	2 ICLK	
0008 706Ah	ICU	Interrupt request register 106	IR106	8	8	2 ICLK	
0008 706Bh	ICU	Interrupt request register 107	IR107	8	8	2 ICLK	
0008 7072h	ICU	Interrupt request register 114	IR114	8	8	2 ICLK	
0008 7073h	ICU	Interrupt request register 115	IR115	8	8	2 ICLK	
0008 7074h	ICU	Interrupt request register 116	IR116	8	8	2 ICLK	
0008 7075h	ICU	Interrupt request register 117	IR117	8	8	2 ICLK	

Table 4.1 List of I/O Registers (Address Order) (4 / 29)

Address	Module Symbol	Register Name	Register Symbol	Number of Bits	Access Size	Number of Access Cycles ICLK ≥ PCLK	Number of Access Cycles ICLK < PCLK
0008 7076h	ICU	Interrupt request register 118	IR118	8	8	2 ICLK	
0008 7077h	ICU	Interrupt request register 119	IR119	8	8	2 ICLK	
0008 7078h	ICU	Interrupt request register 120	IR120	8	8	2 ICLK	
0008 7079h	ICU	Interrupt request register 121	IR121	8	8	2 ICLK	
0008 707Ah	ICU	Interrupt request register 122	IR122	8	8	2 ICLK	
0008 707Bh	ICU	Interrupt request register 123	IR123	8	8	2 ICLK	
0008 707Ch	ICU	Interrupt request register 124	IR124	8	8	2 ICLK	
0008 707Dh	ICU	Interrupt request register 125	IR125	8	8	2 ICLK	
0008 707Eh	ICU	Interrupt request register 126	IR126	8	8	2 ICLK	
0008 707Fh	ICU	Interrupt request register 127	IR127	8	8	2 ICLK	
0008 7080h	ICU	Interrupt request register 128	IR128	8	8	2 ICLK	
0008 7081h	ICU	Interrupt request register 129	IR129	8	8	2 ICLK	
0008 7082h	ICU	Interrupt request register 130	IR130	8	8	2 ICLK	
0008 7083h	ICU	Interrupt request register 131	IR131	8	8	2 ICLK	
0008 7084h	ICU	Interrupt request register 132	IR132	8	8	2 ICLK	
0008 7085h	ICU	Interrupt request register 133	IR133	8	8	2 ICLK	
0008 7086h	ICU	Interrupt request register 134	IR134	8	8	2 ICLK	
0008 7087h	ICU	Interrupt request register 135	IR135	8	8	2 ICLK	
0008 7088h	ICU	Interrupt request register 136	IR136	8	8	2 ICLK	
0008 7089h	ICU	Interrupt request register 137	IR137	8	8	2 ICLK	
0008 708Ah	ICU	Interrupt request register 138	IR138	8	8	2 ICLK	
0008 708Bh	ICU	Interrupt request register 139	IR139	8	8	2 ICLK	
0008 708Ch	ICU	Interrupt request register 140	IR140	8	8	2 ICLK	
0008 708Dh	ICU	Interrupt request register 141	IR141	8	8	2 ICLK	
0008 708Eh	ICU	Interrupt request register 142	IR142	8	8	2 ICLK	
0008 708Fh	ICU	Interrupt request register 143	IR143	8	8	2 ICLK	
0008 7090h	ICU	Interrupt request register 144	IR144	8	8	2 ICLK	
0008 7091h	ICU	Interrupt request register 145	IR145	8	8	2 ICLK	
0008 7092h	ICU	Interrupt request register 146	IR146	8	8	2 ICLK	
0008 7093h	ICU	Interrupt request register 147	IR147	8	8	2 ICLK	
0008 7094h	ICU	Interrupt request register 148	IR148	8	8	2 ICLK	
0008 7095h	ICU	Interrupt request register 149	IR149	8	8	2 ICLK	
0008 7096h	ICU	Interrupt request register 150	IR150	8	8	2 ICLK	
0008 7097h	ICU	Interrupt request register 151	IR151	8	8	2 ICLK	
0008 7098h	ICU	Interrupt request register 152	IR152	8	8	2 ICLK	
0008 7099h	ICU	Interrupt request register 153	IR153	8	8	2 ICLK	
0008 709Ah	ICU	Interrupt request register 154	IR154	8	8	2 ICLK	
0008 709Bh	ICU	Interrupt request register 155	IR155	8	8	2 ICLK	
0008 709Ch	ICU	Interrupt request register 156	IR156	8	8	2 ICLK	
0008 709Dh	ICU	Interrupt request register 157	IR157	8	8	2 ICLK	
0008 709Eh	ICU	Interrupt request register 158	IR158	8	8	2 ICLK	
0008 709Fh	ICU	Interrupt request register 159	IR159	8	8	2 ICLK	
0008 70A0h	ICU	Interrupt request register 160	IR160	8	8	2 ICLK	
0008 70A1h	ICU	Interrupt request register 161	IR161	8	8	2 ICLK	
0008 70A2h	ICU	Interrupt request register 162	IR162	8	8	2 ICLK	
0008 70A3h	ICU	Interrupt request register 163	IR163	8	8	2 ICLK	
0008 70A4h	ICU	Interrupt request register 164	IR164	8	8	2 ICLK	
0008 70A5h	ICU	Interrupt request register 165	IR165	8	8	2 ICLK	
0008 70A6h	ICU	Interrupt request register 166	IR166	8	8	2 ICLK	
0008 70A7h	ICU	Interrupt request register 167	IR167	8	8	2 ICLK	
0008 70AAh	ICU	Interrupt request register 170	IR170	8	8	2 ICLK	

Table 4.1 List of I/O Registers (Address Order) (5 / 29)

Address	Module Symbol	Register Name	Register Symbol	Number of Bits	Access Size	Number of Access Cycles ICLK ≥ PCLK	Number of Access Cycles ICLK < PCLK
0008 70ABh	ICU	Interrupt request register 171	IR171	8	8	2 ICLK	
0008 70AEh	ICU	Interrupt request register 174	IR174	8	8	2 ICLK	
0008 70AFh	ICU	Interrupt request register 175	IR175	8	8	2 ICLK	
0008 70B0h	ICU	Interrupt request register 176	IR176	8	8	2 ICLK	
0008 70B1h	ICU	Interrupt request register 177	IR177	8	8	2 ICLK	
0008 70B2h	ICU	Interrupt request register 178	IR178	8	8	2 ICLK	
0008 70B3h	ICU	Interrupt request register 179	IR179	8	8	2 ICLK	
0008 70B4h	ICU	Interrupt request register 180	IR180	8	8	2 ICLK	
0008 70B5h	ICU	Interrupt request register 181	IR181	8	8	2 ICLK	
0008 70B6h	ICU	Interrupt request register 182	IR182	8	8	2 ICLK	
0008 70B7h	ICU	Interrupt request register 183	IR183	8	8	2 ICLK	
0008 70B8h	ICU	Interrupt request register 184	IR184	8	8	2 ICLK	
0008 70B9h	ICU	Interrupt request register 185	IR185	8	8	2 ICLK	
0008 70BAh	ICU	Interrupt request register 186	IR186	8	8	2 ICLK	
0008 70BBh	ICU	Interrupt request register 187	IR187	8	8	2 ICLK	
0008 70BCh	ICU	Interrupt request register 188	IR188	8	8	2 ICLK	
0008 70BDh	ICU	Interrupt request register 189	IR189	8	8	2 ICLK	
0008 70BEh	ICU	Interrupt request register 190	IR190	8	8	2 ICLK	
0008 70BFh	ICU	Interrupt request register 191	IR191	8	8	2 ICLK	
0008 70C0h	ICU	Interrupt request register 192	IR192	8	8	2 ICLK	
0008 70C1h	ICU	Interrupt request register 193	IR193	8	8	2 ICLK	
0008 70C2h	ICU	Interrupt request register 194	IR194	8	8	2 ICLK	
0008 70C3h	ICU	Interrupt request register 195	IR195	8	8	2 ICLK	
0008 70C4h	ICU	Interrupt request register 196	IR196	8	8	2 ICLK	
0008 70C5h	ICU	Interrupt request register 197	IR197	8	8	2 ICLK	
0008 70C6h	ICU	Interrupt request register 198	IR198	8	8	2 ICLK	
0008 70C7h	ICU	Interrupt request register 199	IR199	8	8	2 ICLK	
0008 70C8h	ICU	Interrupt request register 200	IR200	8	8	2 ICLK	
0008 70C9h	ICU	Interrupt request register 201	IR201	8	8	2 ICLK	
0008 70CEh	ICU	Interrupt request register 206	IR206	8	8	2 ICLK	
0008 70CFh	ICU	Interrupt request register 207	IR207	8	8	2 ICLK	
0008 70D0h	ICU	Interrupt request register 208	IR208	8	8	2 ICLK	
0008 70D1h	ICU	Interrupt request register 209	IR209	8	8	2 ICLK	
0008 70D2h	ICU	Interrupt request register 210	IR210	8	8	2 ICLK	
0008 70D3h	ICU	Interrupt request register 211	IR211	8	8	2 ICLK	
0008 70D4h	ICU	Interrupt request register 212	IR212	8	8	2 ICLK	
0008 70D5h	ICU	Interrupt request register 213	IR213	8	8	2 ICLK	
0008 70D6h	ICU	Interrupt request register 214	IR214	8	8	2 ICLK	
0008 70D7h	ICU	Interrupt request register 215	IR215	8	8	2 ICLK	
0008 70D8h	ICU	Interrupt request register 216	IR216	8	8	2 ICLK	
0008 70D9h	ICU	Interrupt request register 217	IR217	8	8	2 ICLK	
0008 70DAh	ICU	Interrupt request register 218	IR218	8	8	2 ICLK	
0008 70DBh	ICU	Interrupt request register 219	IR219	8	8	2 ICLK	
0008 70DCh	ICU	Interrupt request register 220	IR220	8	8	2 ICLK	
0008 70DDh	ICU	Interrupt request register 221	IR221	8	8	2 ICLK	
0008 70DEh	ICU	Interrupt request register 222	IR222	8	8	2 ICLK	
0008 70DFh	ICU	Interrupt request register 223	IR223	8	8	2 ICLK	
0008 70E0h	ICU	Interrupt request register 224	IR224	8	8	2 ICLK	
0008 70E1h	ICU	Interrupt request register 225	IR225	8	8	2 ICLK	
0008 70E2h	ICU	Interrupt request register 226	IR226	8	8	2 ICLK	
0008 70E3h	ICU	Interrupt request register 227	IR227	8	8	2 ICLK	

Table 4.1 List of I/O Registers (Address Order) (6 / 29)

Address	Module Symbol	Register Name	Register Symbol	Number of Bits	Access Size	Number of Access Cycles ICLK ≥ PCLK	Number of Access Cycles ICLK < PCLK
0008 70E4h	ICU	Interrupt request register 228	IR228	8	8	2 ICLK	
0008 70E5h	ICU	Interrupt request register 229	IR229	8	8	2 ICLK	
0008 70E6h	ICU	Interrupt request register 230	IR230	8	8	2 ICLK	
0008 70E7h	ICU	Interrupt request register 231	IR231	8	8	2 ICLK	
0008 70E8h	ICU	Interrupt request register 232	IR232	8	8	2 ICLK	
0008 70E9h	ICU	Interrupt request register 233	IR233	8	8	2 ICLK	
0008 70EAh	ICU	Interrupt request register 234	IR234	8	8	2 ICLK	
0008 70EBh	ICU	Interrupt request register 235	IR235	8	8	2 ICLK	
0008 70ECh	ICU	Interrupt request register 236	IR236	8	8	2 ICLK	
0008 70EDh	ICU	Interrupt request register 237	IR237	8	8	2 ICLK	
0008 70EEh	ICU	Interrupt request register 238	IR238	8	8	2 ICLK	
0008 70EFh	ICU	Interrupt request register 239	IR239	8	8	2 ICLK	
0008 70F0h	ICU	Interrupt request register 240	IR240	8	8	2 ICLK	
0008 70F1h	ICU	Interrupt request register 241	IR241	8	8	2 ICLK	
0008 70F2h	ICU	Interrupt request register 242	IR242	8	8	2 ICLK	
0008 70F3h	ICU	Interrupt request register 243	IR243	8	8	2 ICLK	
0008 70F4h	ICU	Interrupt request register 244	IR244	8	8	2 ICLK	
0008 70F5h	ICU	Interrupt request register 245	IR245	8	8	2 ICLK	
0008 70F6h	ICU	Interrupt request register 246	IR246	8	8	2 ICLK	
0008 70F7h	ICU	Interrupt request register 247	IR247	8	8	2 ICLK	
0008 70F8h	ICU	Interrupt request register 248	IR248	8	8	2 ICLK	
0008 70F9h	ICU	Interrupt request register 249	IR249	8	8	2 ICLK	
0008 70FAh	ICU	Interrupt request register 250	IR250	8	8	2 ICLK	
0008 70FBh	ICU	Interrupt request register 251	IR251	8	8	2 ICLK	
0008 70FCh	ICU	Interrupt request register 252	IR252	8	8	2 ICLK	
0008 70FDh	ICU	Interrupt request register 253	IR253	8	8	2 ICLK	
0008 711Bh	ICU	DTC activation enable register 027	DTCER027	8	8	2 ICLK	
0008 711Ch	ICU	DTC activation enable register 028	DTCER028	8	8	2 ICLK	
0008 711Dh	ICU	DTC activation enable register 029	DTCER029	8	8	2 ICLK	
0008 711Eh	ICU	DTC activation enable register 030	DTCER030	8	8	2 ICLK	
0008 711Fh	ICU	DTC activation enable register 031	DTCER031	8	8	2 ICLK	
0008 712Dh	ICU	DTC activation enable register 045	DTCER045	8	8	2 ICLK	
0008 712Eh	ICU	DTC activation enable register 046	DTCER046	8	8	2 ICLK	
0008 713Ah	ICU	DTC activation enable register 058	DTCER058	8	8	2 ICLK	
0008 713Bh	ICU	DTC activation enable register 059	DTCER059	8	8	2 ICLK	
0008 7140h	ICU	DTC activation enable register 064	DTCER064	8	8	2 ICLK	
0008 7141h	ICU	DTC activation enable register 065	DTCER065	8	8	2 ICLK	
0008 7142h	ICU	DTC activation enable register 066	DTCER066	8	8	2 ICLK	
0008 7143h	ICU	DTC activation enable register 067	DTCER067	8	8	2 ICLK	
0008 7144h	ICU	DTC activation enable register 068	DTCER068	8	8	2 ICLK	
0008 7145h	ICU	DTC activation enable register 069	DTCER069	8	8	2 ICLK	
0008 7146h	ICU	DTC activation enable register 070	DTCER070	8	8	2 ICLK	
0008 7147h	ICU	DTC activation enable register 071	DTCER071	8	8	2 ICLK	
0008 7166h	ICU	DTC activation enable register 102	DTCER102	8	8	2 ICLK	
0008 7167h	ICU	DTC activation enable register 103	DTCER103	8	8	2 ICLK	
0008 716Ah	ICU	DTC activation enable register 106	DTCER106	8	8	2 ICLK	
0008 716Bh	ICU	DTC activation enable register 107	DTCER107	8	8	2 ICLK	
0008 7172h	ICU	DTC activation enable register 114	DTCER114	8	8	2 ICLK	
0008 7173h	ICU	DTC activation enable register 115	DTCER115	8	8	2 ICLK	
0008 7174h	ICU	DTC activation enable register 116	DTCER116	8	8	2 ICLK	
0008 7175h	ICU	DTC activation enable register 117	DTCER117	8	8	2 ICLK	

Table 4.1 List of I/O Registers (Address Order) (7 / 29)

Address	Module Symbol	Register Name	Register Symbol	Number of Bits	Access Size	Number of Access Cycles ICLK ≥ PCLK	Number of Access Cycles ICLK < PCLK
0008 7179h	ICU	DTC activation enable register 121	DTCER121	8	8	2 ICLK	
0008 717Ah	ICU	DTC activation enable register 122	DTCER122	8	8	2 ICLK	
0008 717Dh	ICU	DTC activation enable register 125	DTCER125	8	8	2 ICLK	
0008 717Eh	ICU	DTC activation enable register 126	DTCER126	8	8	2 ICLK	
0008 7181h	ICU	DTC activation enable register 129	DTCER129	8	8	2 ICLK	
0008 7182h	ICU	DTC activation enable register 130	DTCER130	8	8	2 ICLK	
0008 7183h	ICU	DTC activation enable register 131	DTCER131	8	8	2 ICLK	
0008 7184h	ICU	DTC activation enable register 132	DTCER132	8	8	2 ICLK	
0008 7186h	ICU	DTC activation enable register 134	DTCER134	8	8	2 ICLK	
0008 7187h	ICU	DTC activation enable register 135	DTCER135	8	8	2 ICLK	
0008 7188h	ICU	DTC activation enable register 136	DTCER136	8	8	2 ICLK	
0008 7189h	ICU	DTC activation enable register 137	DTCER137	8	8	2 ICLK	
0008 718Ah	ICU	DTC activation enable register 138	DTCER138	8	8	2 ICLK	
0008 718Bh	ICU	DTC activation enable register 139	DTCER139	8	8	2 ICLK	
0008 718Ch	ICU	DTC activation enable register 140	DTCER140	8	8	2 ICLK	
0008 718Dh	ICU	DTC activation enable register 141	DTCER141	8	8	2 ICLK	
0008 718Eh	ICU	DTC activation enable register 142	DTCER142	8	8	2 ICLK	
0008 718Fh	ICU	DTC activation enable register 143	DTCER143	8	8	2 ICLK	
0008 7190h	ICU	DTC activation enable register 144	DTCER144	8	8	2 ICLK	
0008 7191h	ICU	DTC activation enable register 145	DTCER145	8	8	2 ICLK	
0008 7193h	ICU	DTC activation enable register 147	DTCER147	8	8	2 ICLK	
0008 7194h	ICU	DTC activation enable register 148	DTCER148	8	8	2 ICLK	
0008 7197h	ICU	DTC activation enable register 151	DTCER151	8	8	2 ICLK	
0008 7198h	ICU	DTC activation enable register 152	DTCER152	8	8	2 ICLK	
0008 719Bh	ICU	DTC activation enable register 155	DTCER155	8	8	2 ICLK	
0008 719Ch	ICU	DTC activation enable register 156	DTCER156	8	8	2 ICLK	
0008 719Dh	ICU	DTC activation enable register 157	DTCER157	8	8	2 ICLK	
0008 719Eh	ICU	DTC activation enable register 158	DTCER158	8	8	2 ICLK	
0008 71A0h	ICU	DTC activation enable register 160	DTCER160	8	8	2 ICLK	
0008 71A1h	ICU	DTC activation enable register 161	DTCER161	8	8	2 ICLK	
0008 71A4h	ICU	DTC activation enable register 164	DTCER164	8	8	2 ICLK	
0008 71A5h	ICU	DTC activation enable register 165	DTCER165	8	8	2 ICLK	
0008 71AEh	ICU	DTC activation enable register 174	DTCER174	8	8	2 ICLK	
0008 71AFh	ICU	DTC activation enable register 175	DTCER175	8	8	2 ICLK	
0008 71B1h	ICU	DTC activation enable register 177	DTCER177	8	8	2 ICLK	
0008 71B2h	ICU	DTC activation enable register 178	DTCER178	8	8	2 ICLK	
0008 71B4h	ICU	DTC activation enable register 180	DTCER180	8	8	2 ICLK	
0008 71B5h	ICU	DTC activation enable register 181	DTCER181	8	8	2 ICLK	
0008 71B7h	ICU	DTC activation enable register 183	DTCER183	8	8	2 ICLK	
0008 71B8h	ICU	DTC activation enable register 184	DTCER184	8	8	2 ICLK	
0008 71BBh	ICU	DTC activation enable register 187	DTCER187	8	8	2 ICLK	
0008 71BCh	ICU	DTC activation enable register 188	DTCER188	8	8	2 ICLK	
0008 71BFh	ICU	DTC activation enable register 191	DTCER191	8	8	2 ICLK	
0008 71C0h	ICU	DTC activation enable register 192	DTCER192	8	8	2 ICLK	
0008 71C3h	ICU	DTC activation enable register 195	DTCER195	8	8	2 ICLK	
0008 71C4h	ICU	DTC activation enable register 196	DTCER196	8	8	2 ICLK	
0008 71C6h	ICU	DTC activation enable register 198	DTCER198	8	8	2 ICLK	
0008 71C7h	ICU	DTC activation enable register 199	DTCER199	8	8	2 ICLK	
0008 71C8h	ICU	DTC activation enable register 200	DTCER200	8	8	2 ICLK	
0008 71C9h	ICU	DTC activation enable register 201	DTCER201	8	8	2 ICLK	
0008 71CFh	ICU	DTC activation enable register 207	DTCER207	8	8	2 ICLK	

Table 4.1 List of I/O Registers (Address Order) (8 / 29)

Address	Module Symbol	Register Name	Register Symbol	Number of Bits	Access Size	Number of Access Cycles ICLK ≥ PCLK	Number of Access Cycles ICLK < PCLK
0008 71D0h	ICU	DTC activation enable register 208	DTCER208	8	8	2 ICLK	
0008 71D3h	ICU	DTC activation enable register 211	DTCER211	8	8	2 ICLK	
0008 71D4h	ICU	DTC activation enable register 212	DTCER212	8	8	2 ICLK	
0008 71D7h	ICU	DTC activation enable register 215	DTCER215	8	8	2 ICLK	
0008 71D8h	ICU	DTC activation enable register 216	DTCER216	8	8	2 ICLK	
0008 71DBh	ICU	DTC activation enable register 219	DTCER219	8	8	2 ICLK	
0008 71DCh	ICU	DTC activation enable register 220	DTCER220	8	8	2 ICLK	
0008 71DFh	ICU	DTC activation enable register 223	DTCER223	8	8	2 ICLK	
0008 71E0h	ICU	DTC activation enable register 224	DTCER224	8	8	2 ICLK	
0008 71E3h	ICU	DTC activation enable register 227	DTCER227	8	8	2 ICLK	
0008 71E4h	ICU	DTC activation enable register 228	DTCER228	8	8	2 ICLK	
0008 71E7h	ICU	DTC activation enable register 231	DTCER231	8	8	2 ICLK	
0008 71E8h	ICU	DTC activation enable register 232	DTCER232	8	8	2 ICLK	
0008 71EBh	ICU	DTC activation enable register 235	DTCER235	8	8	2 ICLK	
0008 71ECh	ICU	DTC activation enable register 236	DTCER236	8	8	2 ICLK	
0008 71EFh	ICU	DTC activation enable register 239	DTCER239	8	8	2 ICLK	
0008 71F0h	ICU	DTC activation enable register 240	DTCER240	8	8	2 ICLK	
0008 71F7h	ICU	DTC activation enable register 247	DTCER247	8	8	2 ICLK	
0008 71F8h	ICU	DTC activation enable register 248	DTCER248	8	8	2 ICLK	
0008 71FBh	ICU	DTC activation enable register 251	DTCER251	8	8	2 ICLK	
0008 71FCh	ICU	DTC activation enable register 252	DTCER252	8	8	2 ICLK	
0008 7202h	ICU	Interrupt request enable register 02	IER02	8	8	2 ICLK	
0008 7203h	ICU	Interrupt request enable register 03	IER03	8	8	2 ICLK	
0008 7204h	ICU	Interrupt request enable register 04	IER04	8	8	2 ICLK	
0008 7205h	ICU	Interrupt request enable register 05	IER05	8	8	2 ICLK	
0008 7207h	ICU	Interrupt request enable register 07	IER07	8	8	2 ICLK	
0008 7208h	ICU	Interrupt request enable register 08	IER08	8	8	2 ICLK	
0008 720Bh	ICU	Interrupt request enable register 0B	IER0B	8	8	2 ICLK	
0008 720Ch	ICU	Interrupt request enable register 0C	IER0C	8	8	2 ICLK	
0008 720Dh	ICU	Interrupt request enable register 0D	IER0D	8	8	2 ICLK	
0008 720Eh	ICU	Interrupt request enable register 0E	IER0E	8	8	2 ICLK	
0008 720Fh	ICU	Interrupt request enable register 0F	IER0F	8	8	2 ICLK	
0008 7210h	ICU	Interrupt request enable register 10	IER10	8	8	2 ICLK	
0008 7211h	ICU	Interrupt request enable register 11	IER11	8	8	2 ICLK	
0008 7212h	ICU	Interrupt request enable register 12	IER12	8	8	2 ICLK	
0008 7213h	ICU	Interrupt request enable register 13	IER13	8	8	2 ICLK	
0008 7214h	ICU	Interrupt request enable register 14	IER14	8	8	2 ICLK	
0008 7215h	ICU	Interrupt request enable register 15	IER15	8	8	2 ICLK	
0008 7216h	ICU	Interrupt request enable register 16	IER16	8	8	2 ICLK	
0008 7217h	ICU	Interrupt request enable register 17	IER17	8	8	2 ICLK	
0008 7218h	ICU	Interrupt request enable register 18	IER18	8	8	2 ICLK	
0008 7219h	ICU	Interrupt request enable register 19	IER19	8	8	2 ICLK	
0008 721Ah	ICU	Interrupt request enable register 1A	IER1A	8	8	2 ICLK	
0008 721Bh	ICU	Interrupt request enable register 1B	IER1B	8	8	2 ICLK	
0008 721Ch	ICU	Interrupt request enable register 1C	IER1C	8	8	2 ICLK	
0008 721Dh	ICU	Interrupt request enable register 1D	IER1D	8	8	2 ICLK	
0008 721Eh	ICU	Interrupt request enable register 1E	IER1E	8	8	2 ICLK	
0008 721Fh	ICU	Interrupt request enable register 1F	IER1F	8	8	2 ICLK	
0008 72E0h	ICU	Software interrupt activation register	SWINTR	8	8	2 ICLK	
0008 72F0h	ICU	Fast interrupt set register	FIR	16	16	2 ICLK	
0008 7300h	ICU	Interrupt source priority register 000	IPR000	8	8	2 ICLK	

Table 4.1 List of I/O Registers (Address Order) (9 / 29)

Address	Module Symbol	Register Name	Register Symbol	Number of Bits	Access Size	Number of Access Cycles ICLK ≥ PCLK	Number of Access Cycles ICLK < PCLK
0008 7301h	ICU	Interrupt source priority register 001	IPR001	8	8	2 ICLK	
0008 7302h	ICU	Interrupt source priority register 002	IPR002	8	8	2 ICLK	
0008 7303h	ICU	Interrupt source priority register 003	IPR003	8	8	2 ICLK	
0008 7304h	ICU	Interrupt source priority register 004	IPR004	8	8	2 ICLK	
0008 7305h	ICU	Interrupt source priority register 005	IPR005	8	8	2 ICLK	
0008 7306h	ICU	Interrupt source priority register 006	IPR006	8	8	2 ICLK	
0008 7307h	ICU	Interrupt source priority register 007	IPR007	8	8	2 ICLK	
0008 7320h	ICU	Interrupt source priority register 032	IPR032	8	8	2 ICLK	
0008 7321h	ICU	Interrupt source priority register 033	IPR033	8	8	2 ICLK	
0008 7322h	ICU	Interrupt source priority register 034	IPR034	8	8	2 ICLK	
0008 732Ch	ICU	Interrupt source priority register 044	IPR044	8	8	2 ICLK	
0008 7339h	ICU	Interrupt source priority register 057	IPR057	8	8	2 ICLK	
0008 733Ah	ICU	Interrupt source priority register 058	IPR058	8	8	2 ICLK	
0008 733Bh	ICU	Interrupt source priority register 059	IPR059	8	8	2 ICLK	
0008 733Fh	ICU	Interrupt source priority register 063	IPR063	8	8	2 ICLK	
0008 7340h	ICU	Interrupt source priority register 064	IPR064	8	8	2 ICLK	
0008 7341h	ICU	Interrupt source priority register 065	IPR065	8	8	2 ICLK	
0008 7342h	ICU	Interrupt source priority register 066	IPR066	8	8	2 ICLK	
0008 7343h	ICU	Interrupt source priority register 067	IPR067	8	8	2 ICLK	
0008 7344h	ICU	Interrupt source priority register 068	IPR068	8	8	2 ICLK	
0008 7345h	ICU	Interrupt source priority register 069	IPR069	8	8	2 ICLK	
0008 7346h	ICU	Interrupt source priority register 070	IPR070	8	8	2 ICLK	
0008 7347h	ICU	Interrupt source priority register 071	IPR071	8	8	2 ICLK	
0008 7358h	ICU	Interrupt source priority register 088	IPR088	8	8	2 ICLK	
0008 7359h	ICU	Interrupt source priority register 089	IPR089	8	8	2 ICLK	
0008 735Ch	ICU	Interrupt source priority register 092	IPR092	8	8	2 ICLK	
0008 735Dh	ICU	Interrupt source priority register 093	IPR093	8	8	2 ICLK	
0008 7366h	ICU	Interrupt source priority register 102	IPR102	8	8	2 ICLK	
0008 7367h	ICU	Interrupt source priority register 103	IPR103	8	8	2 ICLK	
0008 736Ah	ICU	Interrupt source priority register 106	IPR106	8	8	2 ICLK	
0008 736Bh	ICU	Interrupt source priority register 107	IPR107	8	8	2 ICLK	
0008 7372h	ICU	Interrupt source priority register 114	IPR114	8	8	2 ICLK	
0008 7376h	ICU	Interrupt source priority register 118	IPR118	8	8	2 ICLK	
0008 7379h	ICU	Interrupt source priority register 121	IPR121	8	8	2 ICLK	
0008 737Bh	ICU	Interrupt source priority register 123	IPR123	8	8	2 ICLK	
0008 737Dh	ICU	Interrupt source priority register 125	IPR125	8	8	2 ICLK	
0008 737Fh	ICU	Interrupt source priority register 127	IPR127	8	8	2 ICLK	
0008 7381h	ICU	Interrupt source priority register 129	IPR129	8	8	2 ICLK	
0008 7385h	ICU	Interrupt source priority register 133	IPR133	8	8	2 ICLK	
0008 7386h	ICU	Interrupt source priority register 134	IPR134	8	8	2 ICLK	
0008 738Ah	ICU	Interrupt source priority register 138	IPR138	8	8	2 ICLK	
0008 738Bh	ICU	Interrupt source priority register 139	IPR139	8	8	2 ICLK	
0008 738Eh	ICU	Interrupt source priority register 142	IPR142	8	8	2 ICLK	
0008 7392h	ICU	Interrupt source priority register 146	IPR146	8	8	2 ICLK	
0008 7393h	ICU	Interrupt source priority register 147	IPR147	8	8	2 ICLK	
0008 7395h	ICU	Interrupt source priority register 149	IPR149	8	8	2 ICLK	
0008 7397h	ICU	Interrupt source priority register 151	IPR151	8	8	2 ICLK	
0008 7399h	ICU	Interrupt source priority register 153	IPR153	8	8	2 ICLK	
0008 739Bh	ICU	Interrupt source priority register 155	IPR155	8	8	2 ICLK	
0008 739Fh	ICU	Interrupt source priority register 159	IPR159	8	8	2 ICLK	
0008 73A0h	ICU	Interrupt source priority register 160	IPR160	8	8	2 ICLK	

Table 4.1 List of I/O Registers (Address Order) (10 / 29)

Address	Module Symbol	Register Name	Register Symbol	Number of Bits	Access Size	Number of Access Cycles ICLK ≥ PCLK	Number of Access Cycles ICLK < PCLK
0008 738A2	ICU	Interrupt source priority register 162	IPR162	8	8	2 ICLK	
0008 73A4h	ICU	Interrupt source priority register 164	IPR164	8	8	2 ICLK	
0008 73A6h	ICU	Interrupt source priority register 166	IPR166	8	8	2 ICLK	
0008 73AAh	ICU	Interrupt source priority register 170	IPR170	8	8	2 ICLK	
0008 73ABh	ICU	Interrupt source priority register 171	IPR171	8	8	2 ICLK	
0008 73AEh	ICU	Interrupt source priority register 174	IPR174	8	8	2 ICLK	
0008 73B1h	ICU	Interrupt source priority register 177	IPR177	8	8	2 ICLK	
0008 73B4h	ICU	Interrupt source priority register 180	IPR180	8	8	2 ICLK	
0008 73B7h	ICU	Interrupt source priority register 183	IPR183	8	8	2 ICLK	
0008 73BAh	ICU	Interrupt source priority register 186	IPR186	8	8	2 ICLK	
0008 73BEh	ICU	Interrupt source priority register 190	IPR190	8	8	2 ICLK	
0008 73C2h	ICU	Interrupt source priority register 194	IPR194	8	8	2 ICLK	
0008 73C6h	ICU	Interrupt source priority register 198	IPR198	8	8	2 ICLK	
0008 73C7h	ICU	Interrupt source priority register 199	IPR199	8	8	2 ICLK	
0008 73C8h	ICU	Interrupt source priority register 200	IPR200	8	8	2 ICLK	
0008 73C9h	ICU	Interrupt source priority register 201	IPR201	8	8	2 ICLK	
0008 73CEh	ICU	Interrupt source priority register 206	IPR206	8	8	2 ICLK	
0008 73D2h	ICU	Interrupt source priority register 210	IPR210	8	8	2 ICLK	
0008 73D6h	ICU	Interrupt source priority register 214	IPR214	8	8	2 ICLK	
0008 73DAh	ICU	Interrupt source priority register 218	IPR218	8	8	2 ICLK	
0008 73DEh	ICU	Interrupt source priority register 222	IPR222	8	8	2 ICLK	
0008 73E2h	ICU	Interrupt source priority register 226	IPR226	8	8	2 ICLK	
0008 73E6h	ICU	Interrupt source priority register 230	IPR230	8	8	2 ICLK	
0008 73EAh	ICU	Interrupt source priority register 234	IPR234	8	8	2 ICLK	
0008 73EEh	ICU	Interrupt source priority register 238	IPR238	8	8	2 ICLK	
0008 73F2h	ICU	Interrupt source priority register 242	IPR242	8	8	2 ICLK	
0008 73F3h	ICU	Interrupt source priority register 243	IPR243	8	8	2 ICLK	
0008 73F4h	ICU	Interrupt source priority register 244	IPR244	8	8	2 ICLK	
0008 73F5h	ICU	Interrupt source priority register 245	IPR245	8	8	2 ICLK	
0008 73F6h	ICU	Interrupt source priority register 246	IPR246	8	8	2 ICLK	
0008 73F7h	ICU	Interrupt source priority register 247	IPR247	8	8	2 ICLK	
0008 73F8h	ICU	Interrupt source priority register 248	IPR248	8	8	2 ICLK	
0008 73F9h	ICU	Interrupt source priority register 249	IPR249	8	8	2 ICLK	
0008 73FAh	ICU	Interrupt source priority register 250	IPR250	8	8	2 ICLK	
0008 7400h	ICU	DMAC activation request select register 0	DMRSR0	8	8	2 ICLK	
0008 7404h	ICU	DMAC activation request select register 1	DMRSR1	8	8	2 ICLK	
0008 7408h	ICU	DMAC activation request select register 2	DMRSR2	8	8	2 ICLK	
0008 740Ch	ICU	DMAC activation request select register 3	DMRSR3	8	8	2 ICLK	
0008 7500h	ICU	IRQ control register 0	IRQCR0	8	8	2 ICLK	
0008 7501h	ICU	IRQ control register 1	IRQCR1	8	8	2 ICLK	
0008 7502h	ICU	IRQ control register 2	IRQCR2	8	8	2 ICLK	
0008 7503h	ICU	IRQ control register 3	IRQCR3	8	8	2 ICLK	
0008 7504h	ICU	IRQ control register 4	IRQCR4	8	8	2 ICLK	
0008 7505h	ICU	IRQ control register 5	IRQCR5	8	8	2 ICLK	
0008 7506h	ICU	IRQ control register 6	IRQCR6	8	8	2 ICLK	
0008 7507h	ICU	IRQ control register 7	IRQCR7	8	8	2 ICLK	
0008 7510h	ICU	IRQ pin digital filter enable register 0	IRQFLTE0	8	8	2 ICLK	
0008 7514h	ICU	IRQ pin digital filter setting register 0	IRQFLTC0	16	16	2 ICLK	
0008 7580h	ICU	Non-maskable interrupt status register	NMISR	8	8	2 ICLK	
0008 7581h	ICU	Non-maskable interrupt enable register	NMIER	8	8	2 ICLK	
0008 7582h	ICU	Non-maskable interrupt clear register	NMICLR	8	8	2 ICLK	

Table 4.1 List of I/O Registers (Address Order) (11 / 29)

Address	Module Symbol	Register Name	Register Symbol	Number of Bits	Access Size	Number of Access Cycles ICLK ≥ PCLK	Number of Access Cycles ICLK < PCLK
0008 7583h	ICU	NMI pin interrupt control register	NMICR	8	8	2 ICLK	
0008 7590h	ICU	NMI pin digital filter enable register	NMIFLTE	8	8	2 ICLK	
0008 7594h	ICU	NMI pin digital filter setting register	NMIFLTC	8	8	2 ICLK	
0008 8000h	CMT	Compare match timer start register 0	CMSTR0	16	16	2, 3 PCLKB	2 ICLK
0008 8002h	CMT0	Compare match timer control register	CMCR	16	16	2, 3 PCLKB	2 ICLK
0008 8004h	CMT0	Compare match timer counter	CMCNT	16	16	2, 3 PCLKB	2 ICLK
0008 8006h	CMT0	Compare match timer constant register	CMCOR	16	16	2, 3 PCLKB	2 ICLK
0008 8008h	CMT1	Compare match timer control register	CMCR	16	16	2, 3 PCLKB	2 ICLK
0008 800Ah	CMT1	Compare match timer counter	CMCNT	16	16	2, 3 PCLKB	2 ICLK
0008 800Ch	CMT1	Compare match timer constant register	CMCOR	16	16	2, 3 PCLKB	2 ICLK
0008 8010h	CMT	Compare match timer start register 1	CMSTR1	16	16	2, 3 PCLKB	2 ICLK
0008 8012h	CMT2	Compare match timer control register	CMCR	16	16	2, 3 PCLKB	2 ICLK
0008 8014h	CMT2	Compare match timer counter	CMCNT	16	16	2, 3 PCLKB	2 ICLK
0008 8016h	CMT2	Compare match timer constant register	CMCOR	16	16	2, 3 PCLKB	2 ICLK
0008 8018h	CMT3	Compare match timer control register	CMCR	16	16	2, 3 PCLKB	2 ICLK
0008 801Ah	CMT3	Compare match timer counter	CMCNT	16	16	2, 3 PCLKB	2 ICLK
0008 801Ch	CMT3	Compare match timer constant register	CMCOR	16	16	2, 3 PCLKB	2 ICLK
0008 8020h	WDT	WDT refresh register	WDTRR	8	8	2, 3 PCLKB	2 ICLK
0008 8022h	WDT	WDT control register	WDTCR	16	16	2, 3 PCLKB	2 ICLK
0008 8024h	WDT	WDT status register	WDTSR	16	16	2, 3 PCLKB	2 ICLK
0008 8026h	WDT	WDT reset control register	WDTRCR	8	8	2, 3 PCLKB	2 ICLK
0008 8030h	IWDT	IWDT refresh register	IWDTRR	8	8	2, 3 PCLKB	2 ICLK
0008 8032h	IWDT	IWDT control register	IWDTCR	16	16	2, 3 PCLKB	2 ICLK
0008 8034h	IWDT	IWDT status register	IWDTSR	16	16	2, 3 PCLKB	2 ICLK
0008 8036h	IWDT	IWDT reset control register	IWDTRCR	8	8	2, 3 PCLKB	2 ICLK
0008 8038h	IWDT	IWDT count stop control register	IWDTCSTPR	8	8	2, 3 PCLKB	2 ICLK
0008 80C0h	DA	D/A data register 0	DADR0	16	16	2, 3 PCLKB	2 ICLK
0008 80C2h	DA	D/A data register 1	DADR1	16	16	2, 3 PCLKB	2 ICLK
0008 80C4h	DA	D/A control register	DACR	8	8	2, 3 PCLKB	2 ICLK
0008 80C5h	DA	DADRm format select register	DADPR	8	8	2, 3 PCLKB	2 ICLK
0008 8100h	TPU	Timer start register	TSTR	8	8	2, 3 PCLKB	2 ICLK
0008 8101h	TPU	Timer synchronous register	TSYR	8	8	2, 3 PCLKB	2 ICLK
0008 8108h	TPU0	Noise filter control register	NFCR	8	8	2, 3 PCLKB	2 ICLK
0008 8109h	TPU1	Noise filter control register	NFCR	8	8	2, 3 PCLKB	2 ICLK
0008 810Ah	TPU2	Noise filter control register	NFCR	8	8	2, 3 PCLKB	2 ICLK
0008 810Bh	TPU3	Noise filter control register	NFCR	8	8	2, 3 PCLKB	2 ICLK
0008 810Ch	TPU4	Noise filter control register	NFCR	8	8	2, 3 PCLKB	2 ICLK
0008 810Dh	TPU5	Noise filter control register	NFCR	8	8	2, 3 PCLKB	2 ICLK
0008 8110h	TPU0	Timer control register	TCR	8	8	2, 3 PCLKB	2 ICLK
0008 8111h	TPU0	Timer mode register	TMDR	8	8	2, 3 PCLKB	2 ICLK
0008 8112h	TPU0	Timer I/O control register H	TIORH	8	8	2, 3 PCLKB	2 ICLK
0008 8113h	TPU0	Timer I/O control register L	TIORL	8	8	2, 3 PCLKB	2 ICLK
0008 8114h	TPU0	Timer interrupt enable register	TIER	8	8	2, 3 PCLKB	2 ICLK
0008 8115h	TPU0	Timer status register	TSR	8	8	2, 3 PCLKB	2 ICLK
0008 8116h	TPU0	Timer counter	TCNT	16	16	2, 3 PCLKB	2 ICLK
0008 8118h	TPU0	Timer general register A	TGRA	16	16	2, 3 PCLKB	2 ICLK
0008 811Ah	TPU0	Timer general register B	TGRB	16	16	2, 3 PCLKB	2 ICLK
0008 811Ch	TPU0	Timer general register C	TGRC	16	16	2, 3 PCLKB	2 ICLK
0008 811Eh	TPU0	Timer general register D	TGRD	16	16	2, 3 PCLKB	2 ICLK
0008 8120h	TPU1	Timer control register	TCR	8	8	2, 3 PCLKB	2 ICLK
0008 8121h	TPU1	Timer mode register	TMDR	8	8	2, 3 PCLKB	2 ICLK

Table 4.1 List of I/O Registers (Address Order) (12 / 29)

Address	Module Symbol	Register Name	Register Symbol	Number of Bits	Access Size	Number of Access Cycles ICLK ≥ PCLK	Number of Access Cycles ICLK < PCLK
0008 8122h	TPU1	Timer I/O control register	TIOR	8	8	2, 3 PCLKB	2 ICLK
0008 8124h	TPU1	Timer interrupt enable register	TIER	8	8	2, 3 PCLKB	2 ICLK
0008 8125h	TPU1	Timer status register	TSR	8	8	2, 3 PCLKB	2 ICLK
0008 8126h	TPU1	Timer counter	TCNT	16	16	2, 3 PCLKB	2 ICLK
0008 8128h	TPU1	Timer general register A	TGRA	16	16	2, 3 PCLKB	2 ICLK
0008 812Ah	TPU1	Timer general register B	TGRB	16	16	2, 3 PCLKB	2 ICLK
0008 8130h	TPU2	Timer control register	TCR	8	8	2, 3 PCLKB	2 ICLK
0008 8131h	TPU2	Timer mode register	TMDR	8	8	2, 3 PCLKB	2 ICLK
0008 8132h	TPU2	Timer I/O control register	TIOR	8	8	2, 3 PCLKB	2 ICLK
0008 8134h	TPU2	Timer interrupt enable register	TIER	8	8	2, 3 PCLKB	2 ICLK
0008 8135h	TPU2	Timer status register	TSR	8	8	2, 3 PCLKB	2 ICLK
0008 8136h	TPU2	Timer counter	TCNT	16	16	2, 3 PCLKB	2 ICLK
0008 8138h	TPU2	Timer general register A	TGRA	16	16	2, 3 PCLKB	2 ICLK
0008 813Ah	TPU2	Timer general register B	TGRB	16	16	2, 3 PCLKB	2 ICLK
0008 8140h	TPU3	Timer control register	TCR	8	8	2, 3 PCLKB	2 ICLK
0008 8141h	TPU3	Timer mode register	TMDR	8	8	2, 3 PCLKB	2 ICLK
0008 8142h	TPU3	Timer I/O control register H	TIORH	8	8	2, 3 PCLKB	2 ICLK
0008 8143h	TPU3	Timer I/O control register L	TIORL	8	8	2, 3 PCLKB	2 ICLK
0008 8144h	TPU3	Timer interrupt enable register	TIER	8	8	2, 3 PCLKB	2 ICLK
0008 8145h	TPU3	Timer status register	TSR	8	8	2, 3 PCLKB	2 ICLK
0008 8146h	TPU3	Timer counter	TCNT	16	16	2, 3 PCLKB	2 ICLK
0008 8148h	TPU3	Timer general register A	TGRA	16	16	2, 3 PCLKB	2 ICLK
0008 814Ah	TPU3	Timer general register B	TGRB	16	16	2, 3 PCLKB	2 ICLK
0008 814Ch	TPU3	Timer general register C	TGRC	16	16	2, 3 PCLKB	2 ICLK
0008 814Eh	TPU3	Timer general register D	TGRD	16	16	2, 3 PCLKB	2 ICLK
0008 8150h	TPU4	Timer control register	TCR	8	8	2, 3 PCLKB	2 ICLK
0008 8151h	TPU4	Timer mode register	TMDR	8	8	2, 3 PCLKB	2 ICLK
0008 8152h	TPU4	Timer I/O control register	TIOR	8	8	2, 3 PCLKB	2 ICLK
0008 8154h	TPU4	Timer interrupt enable register	TIER	8	8	2, 3 PCLKB	2 ICLK
0008 8155h	TPU4	Timer status register	TSR	8	8	2, 3 PCLKB	2 ICLK
0008 8156h	TPU4	Timer counter	TCNT	16	16	2, 3 PCLKB	2 ICLK
0008 8158h	TPU4	Timer general register A	TGRA	16	16	2, 3 PCLKB	2 ICLK
0008 815Ah	TPU4	Timer general register B	TGRB	16	16	2, 3 PCLKB	2 ICLK
0008 8160h	TPU5	Timer control register	TCR	8	8	2, 3 PCLKB	2 ICLK
0008 8161h	TPU5	Timer mode register	TMDR	8	8	2, 3 PCLKB	2 ICLK
0008 8162h	TPU5	Timer I/O control register	TIOR	8	8	2, 3 PCLKB	2 ICLK
0008 8164h	TPU5	Timer interrupt enable register	TIER	8	8	2, 3 PCLKB	2 ICLK
0008 8165h	TPU5	Timer status register	TSR	8	8	2, 3 PCLKB	2 ICLK
0008 8166h	TPU5	Timer counter	TCNT	16	16	2, 3 PCLKB	2 ICLK
0008 8168h	TPU5	Timer general register A	TGRA	16	16	2, 3 PCLKB	2 ICLK
0008 816Ah	TPU5	Timer general register B	TGRB	16	16	2, 3 PCLKB	2 ICLK
0008 8200h	TMR0	Timer control register	TCR	8	8	2, 3 PCLKB	2 ICLK
0008 8201h	TMR1	Timer counter control register	TCR	8	8	2, 3 PCLKB	2 ICLK
0008 8202h	TMR0	Timer control/status register	TCSR	8	8	2, 3 PCLKB	2 ICLK
0008 8203h	TMR1	Timer control/status register	TCSR	8	8	2, 3 PCLKB	2 ICLK
0008 8204h	TMR0	Time constant register A	TCORA	8	8	2, 3 PCLKB	2 ICLK
0008 8205h	TMR1	Time constant register A	TCORA	8	8*1	2, 3 PCLKB	2 ICLK
0008 8206h	TMR0	Time constant register B	TCORB	8	8	2, 3 PCLKB	2 ICLK
0008 8207h	TMR1	Time constant register B	TCORB	8	8*1	2, 3 PCLKB	2 ICLK
0008 8208h	TMR0	Timer counter	TCNT	8	8	2, 3 PCLKB	2 ICLK
0008 8209h	TMR1	Timer counter	TCNT	8	8*1	2, 3 PCLKB	2 ICLK

Table 4.1 List of I/O Registers (Address Order) (13 / 29)

Address	Module Symbol	Register Name	Register Symbol	Number of Bits	Access Size	Number of Access Cycles ICLK ≥ PCLK	Number of Access Cycles ICLK < PCLK
0008 820Ah	TMR0	Timer counter control register	TCCR	8	8	2, 3 PCLKB	2 ICLK
0008 820Bh	TMR1	Timer counter control register	TCCR	8	8*1	2, 3 PCLKB	2 ICLK
0008 820Ch	TMR0	Time count start register	TCSTR	8	8	2, 3 PCLKB	2 ICLK
0008 8210h	TMR2	Timer control register	TCR	8	8	2, 3 PCLKB	2 ICLK
0008 8211h	TMR3	Timer control register	TCR	8	8	2, 3 PCLKB	2 ICLK
0008 8212h	TMR2	Timer control/status register	TCSR	8	8	2, 3 PCLKB	2 ICLK
0008 8213h	TMR3	Timer control/status register	TCSR	8	8	2, 3 PCLKB	2 ICLK
0008 8214h	TMR2	Time constant register A	TCORA	8	8	2, 3 PCLKB	2 ICLK
0008 8215h	TMR3	Time constant register A	TCORA	8	8*1	2, 3 PCLKB	2 ICLK
0008 8216h	TMR2	Time constant register B	TCORB	8	8	2, 3 PCLKB	2 ICLK
0008 8217h	TMR3	Time constant register B	TCORB	8	8*1	2, 3 PCLKB	2 ICLK
0008 8218h	TMR2	Timer counter	TCNT	8	8	2, 3 PCLKB	2 ICLK
0008 8219h	TMR3	Timer counter	TCNT	8	8*1	2, 3 PCLKB	2 ICLK
0008 821Ah	TMR2	Timer counter control register	TCCR	8	8	2, 3 PCLKB	2 ICLK
0008 821Bh	TMR3	Timer counter control register	TCCR	8	8*1	2, 3 PCLKB	2 ICLK
0008 821Ch	TMR2	Time count start register	TCSTR	8	8	2, 3 PCLKB	2 ICLK
0008 8280h	CRC	CRC control register	CRCCR	8	8	2, 3 PCLKB	2 ICLK
0008 8281h	CRC	CRC data input register	CRCDIR	8	8	2, 3 PCLKB	2 ICLK
0008 8282h	CRC	CRC data output register	CRCDOR	16	16	2, 3 PCLKB	2 ICLK
0008 8300h	RIIC0	I^2C bus control register 1	ICCR1	8	8	2, 3 PCLKB	2 ICLK
0008 8301h	RIIC0	I^2C bus control register 2	ICCR2	8	8	2, 3 PCLKB	2 ICLK
0008 8302h	RIIC0	I^2C bus mode register 1	ICMR1	8	8	2, 3 PCLKB	2 ICLK
0008 8303h	RIIC0	I^2C bus mode register 2	ICMR2	8	8	2, 3 PCLKB	2 ICLK
0008 8304h	RIIC0	I^2C bus mode register 3	ICMR3	8	8	2, 3 PCLKB	2 ICLK
0008 8305h	RIIC0	I^2C bus function enable register	ICFER	8	8	2, 3 PCLKB	2 ICLK
0008 8306h	RIIC0	I^2C bus status enable register	ICSER	8	8	2, 3 PCLKB	2 ICLK
0008 8307h	RIIC0	I^2C bus interrupt enable register	ICIER	8	8	2, 3 PCLKB	2 ICLK
0008 8308h	RIIC0	I^2C bus status register 1	ICSR1	8	8	2, 3 PCLKB	2 ICLK
0008 8309h	RIIC0	I^2C bus status register 2	ICSR2	8	8	2, 3 PCLKB	2 ICLK
0008 830Ah	RIIC0	Slave address register L0	SARL0	8	8	2, 3 PCLKB	2 ICLK
0008 830Ah	RIIC0	Timeout internal counter L	TMOCNTL	8	8	2, 3 PCLKB	2 ICLK
0008 830Bh	RIIC0	Slave address register U0	SARU0	8	8	2, 3 PCLKB	2 ICLK
0008 830Bh	RIIC0	Timeout internal counter U	TMOCNTU	8	8*2	2, 3 PCLKB	2 ICLK
0008 830Ch	RIIC0	Slave address register L1	SARL1	8	8	2, 3 PCLKB	2 ICLK
0008 830Dh	RIIC0	Slave address register U1	SARU1	8	8	2, 3 PCLKB	2 ICLK
0008 830Eh	RIIC0	Slave address register L2	SARL2	8	8	2, 3 PCLKB	2 ICLK
0008 830Fh	RIIC0	Slave address register U2	SARU2	8	8	2, 3 PCLKB	2 ICLK
0008 8310h	RIIC0	I^2C bus bit rate low-level register	ICBRL	8	8	2, 3 PCLKB	2 ICLK
0008 8311h	RIIC0	I^2C bus bit rate high-level register	ICBRH	8	8	2, 3 PCLKB	2 ICLK
0008 8312h	RIIC0	I^2C bus transmit data register	ICDRT	8	8	2, 3 PCLKB	2 ICLK
0008 8313h	RIIC0	I^2C bus receive data register	ICDRR	8	8	2, 3 PCLKB	2 ICLK
0008 8380h	RSPI0	RSPI control register	SPCR	8	8	2, 3 PCLKB	2 ICLK
0008 8381h	RSPI0	RSPI slave select polarity register	SSLP	8	8	2, 3 PCLKB	2 ICLK
0008 8382h	RSPI0	RSPI pin control register	SPPCR	8	8	2, 3 PCLKB	2 ICLK
0008 8383h	RSPI0	RSPI status register	SPSR	8	8	2, 3 PCLKB	2 ICLK
0008 8384h	RSPI0	RSPI data register	SPDR	32	16, 32	2, 3 PCLKB	2 ICLK
0008 8388h	RSPI0	RSPI sequence control register	SPSCR	8	8	2, 3 PCLKB	2 ICLK
0008 8389h	RSPI0	RSPI sequence status register	SPSSR	8	8	2, 3 PCLKB	2 ICLK
0008 838Ah	RSPI0	RSPI bit rate register	SPBR	8	8	2, 3 PCLKB	2 ICLK
0008 838Bh	RSPI0	RSPI data control register	SPDCR	8	8	2, 3 PCLKB	2 ICLK
0008 838Ch	RSPI0	RSPI clock delay register	SPCKD	8	8	2, 3 PCLKB	2 ICLK

Table 4.1 List of I/O Registers (Address Order) (14 / 29)

Address	Module Symbol	Register Name	Register Symbol	Number of Bits	Access Size	Number of Access Cycles ICLK ≥ PCLK	Number of Access Cycles ICLK < PCLK
0008 838Dh	RSPI0	RSPI slave select negation delay register	SSLND	8	8	2, 3 PCLKB	2 ICLK
0008 838Eh	RSPI0	RSPI next-access delay register	SPND	8	8	2, 3 PCLKB	2 ICLK
0008 838Fh	RSPI0	RSPI control register 2	SPCR2	8	8	2, 3 PCLKB	2 ICLK
0008 8390h	RSPI0	RSPI command register 0	SPCMD0	16	16	2, 3 PCLKB	2 ICLK
0008 8392h	RSPI0	RSPI command register 1	SPCMD1	16	16	2, 3 PCLKB	2 ICLK
0008 8394h	RSPI0	RSPI command register 2	SPCMD2	16	16	2, 3 PCLKB	2 ICLK
0008 8396h	RSPI0	RSPI command register 3	SPCMD3	16	16	2, 3 PCLKB	2 ICLK
0008 8398h	RSPI0	RSPI command register 4	SPCMD4	16	16	2, 3 PCLKB	2 ICLK
0008 839Ah	RSPI0	RSPI command register 5	SPCMD5	16	16	2, 3 PCLKB	2 ICLK
0008 839Ch	RSPI0	RSPI command register 6	SPCMD6	16	16	2, 3 PCLKB	2 ICLK
0008 839Eh	RSPI0	RSPI command register 7	SPCMD7	16	16	2, 3 PCLKB	2 ICLK
0008 8600h	MTU3	Timer control register	TCR	8	8	2, 3 PCLKB	2 ICLK
0008 8601h	MTU4	Timer control register	TCR	8	8	2, 3 PCLKB	2 ICLK
0008 8602h	MTU3	Timer mode register	TMDR	8	8	2, 3 PCLKB	2 ICLK
0008 8603h	MTU4	Timer mode register	TMDR	8	8	2, 3 PCLKB	2 ICLK
0008 8604h	MTU3	Timer I/O control register H	TIORH	8	8	2, 3 PCLKB	2 ICLK
0008 8605h	MTU3	Timer I/O control register L	TIORL	8	8	2, 3 PCLKB	2 ICLK
0008 8606h	MTU4	Timer I/O control register H	TIORH	8	8	2, 3 PCLKB	2 ICLK
0008 8607h	MTU4	Timer I/O control register L	TIORL	8	8	2, 3 PCLKB	2 ICLK
0008 8608h	MTU3	Timer interrupt enable register	TIER	8	8	2, 3 PCLKB	2 ICLK
0008 8609h	MTU4	Timer interrupt enable register	TIER	8	8	2, 3 PCLKB	2 ICLK
0008 860Ah	MTU	Timer output master enable register	TOER	8	8	2, 3 PCLKB	2 ICLK
0008 860Dh	MTU	Timer gate control register	TGCR	8	8	2, 3 PCLKB	2 ICLK
0008 860Eh	MTU	Timer output control register 1	TOCR1	8	8	2, 3 PCLKB	2 ICLK
0008 860Fh	MTU	Timer output control register 2	TOCR2	8	8	2, 3 PCLKB	2 ICLK
0008 8610h	MTU3	Timer counter	TCNT	16	16	2, 3 PCLKB	2 ICLK
0008 8612h	MTU4	Timer counter	TCNT	16	16	2, 3 PCLKB	2 ICLK
0008 8614h	MTU	Timer cycle data register	TCDR	16	16	2, 3 PCLKB	2 ICLK
0008 8616h	MTU	Timer dead time data register	TDDR	16	16	2, 3 PCLKB	2 ICLK
0008 8618h	MTU3	Timer general register A	TGRA	16	16	2, 3 PCLKB	2 ICLK
0008 861Ah	MTU3	Timer general register B	TGRB	16	16	2, 3 PCLKB	2 ICLK
0008 861Ch	MTU4	Timer general register A	TGRA	16	16	2, 3 PCLKB	2 ICLK
0008 861Eh	MTU4	Timer general register B	TGRB	16	16	2, 3 PCLKB	2 ICLK
0008 8620h	MTU	Timer subcounter	TCNTS	16	16	2, 3 PCLKB	2 ICLK
0008 8622h	MTU	Timer cycle buffer register	TCBR	16	16	2, 3 PCLKB	2 ICLK
0008 8624h	MTU3	Timer general register C	TGRC	16	16	2, 3 PCLKB	2 ICLK
0008 8626h	MTU3	Timer general register D	TGRD	16	16	2, 3 PCLKB	2 ICLK
0008 8628h	MTU4	Timer general register C	TGRC	16	16	2, 3 PCLKB	2 ICLK
0008 862Ah	MTU4	Timer general register D	TGRD	16	16	2, 3 PCLKB	2 ICLK
0008 862Ch	MTU3	Timer status register	TSR	8	8	2, 3 PCLKB	2 ICLK
0008 862Dh	MTU4	Timer status register	TSR	8	8	2, 3 PCLKB	2 ICLK
0008 8630h	MTU	Timer interrupt skipping set register	TITCR	8	8	2, 3 PCLKB	2 ICLK
0008 8631h	MTU	Timer interrupt skipping counter	TITCNT	8	8	2, 3 PCLKB	2 ICLK
0008 8632h	MTU	Timer buffer transfer set register	TBTER	8	8	2, 3 PCLKB	2 ICLK
0008 8634h	MTU	Timer dead time enable register	TDER	8	8	2, 3 PCLKB	2 ICLK
0008 8636h	MTU	Timer output level buffer register	TOLBR	8	8	2, 3 PCLKB	2 ICLK
0008 8638h	MTU3	Timer buffer operation transfer mode register	TBTM	8	8	2, 3 PCLKB	2 ICLK
0008 8639h	MTU4	Timer buffer operation transfer mode register	TBTM	8	8	2, 3 PCLKB	2 ICLK
0008 8640h	MTU4	Timer A/D converter start request control register	TADCR	16	16	2, 3 PCLKB	2 ICLK
0008 8644h	MTU4	Timer A/D converter start request cycle set register A	TADCORA	16	16	2, 3 PCLKB	2 ICLK
0008 8646h	MTU4	Timer A/D converter start request cycle set register B	TADCORB	16	16	2, 3 PCLKB	2 ICLK

Table 4.1 List of I/O Registers (Address Order) (15 / 29)

Address	Module Symbol	Register Name	Register Symbol	Number of Bits	Access Size	Number of Access Cycles ICLK ≥ PCLK	Number of Access Cycles ICLK < PCLK
0008 8648h	MTU4	Timer A/D converter start request cycle set buffer register A	TADCOBRA	16	16	2, 3 PCLKB	2 ICLK
0008 864Ah	MTU4	Timer A/D converter start request cycle set buffer register B	TADCOBRB	16	16	2, 3 PCLKB	2 ICLK
0008 8660h	MTU	Timer waveform control register	TWCR	8	8, 16	2, 3 PCLKB	2 ICLK
0008 8680h	MTU	Timer start register	TSTR	8	8, 16	2, 3 PCLKB	2 ICLK
0008 8681h	MTU	Timer synchronous register	TSYR	8	8, 16	2, 3 PCLKB	2 ICLK
0008 8684h	MTU	Timer read/write enable register	TRWER	8	8, 16	2, 3 PCLKB	2 ICLK
0008 8690h	MTU0	Noise filter control register	NFCR	8	8, 16	2, 3 PCLKB	2 ICLK
0008 8691h	MTU1	Noise filter control register	NFCR	8	8, 16	2, 3 PCLKB	2 ICLK
0008 8692h	MTU2	Noise filter control register	NFCR	8	8, 16	2, 3 PCLKB	2 ICLK
0008 8693h	MTU3	Noise filter control register	NFCR	8	8, 16	2, 3 PCLKB	2 ICLK
0008 8694h	MTU4	Noise filter control register	NFCR	8	8, 16	2, 3 PCLKB	2 ICLK
0008 8695h	MTU5	Noise filter control register	NFCR	8	8, 16	2, 3 PCLKB	2 ICLK
0008 8700h	MTU0	Timer control register	TCR	8	8	2, 3 PCLKB	2 ICLK
0008 8701h	MTU0	Timer mode register	TMDR	8	8	2, 3 PCLKB	2 ICLK
0008 8702h	MTU0	Timer I/O control register H	TIORH	8	8	2, 3 PCLKB	2 ICLK
0008 8703h	MTU0	Timer I/O control register L	TIORL	8	8	2, 3 PCLKB	2 ICLK
0008 8704h	MTU0	Timer interrupt enable register	TIER	8	8	2, 3 PCLKB	2 ICLK
0008 8705h	MTU0	Timer status register	TSR	8	8	2, 3 PCLKB	2 ICLK
0008 8706h	MTU0	Timer counter	TCNT	16	16	2, 3 PCLKB	2 ICLK
0008 8708h	MTU0	Timer general register A	TGRA	16	16	2, 3 PCLKB	2 ICLK
0008 870Ah	MTU0	Timer general register B	TGRB	16	16	2, 3 PCLKB	2 ICLK
0008 870Ch	MTU0	Timer general register C	TGRC	16	16	2, 3 PCLKB	2 ICLK
0008 870Eh	MTU0	Timer general register D	TGRD	16	16	2, 3 PCLKB	2 ICLK
0008 8720h	MTU0	Timer general register E	TGRE	16	16	2, 3 PCLKB	2 ICLK
0008 8722h	MTU0	Timer general register F	TGRF	16	16	2, 3 PCLKB	2 ICLK
0008 8724h	MTU0	Timer interrupt enable register 2	TIER2	8	8	2, 3 PCLKB	2 ICLK
0008 8726h	MTU0	Timer buffer operation transfer mode register	TBTM	8	8	2, 3 PCLKB	2 ICLK
0008 8780h	MTU1	Timer control register	TCR	8	8	2, 3 PCLKB	2 ICLK
0008 8781h	MTU1	Timer mode register	TMDR	8	8	2, 3 PCLKB	2 ICLK
0008 8782h	MTU1	Timer I/O control register	TIOR	8	8	2, 3 PCLKB	2 ICLK
0008 8784h	MTU1	Timer interrupt enable register	TIER	8	8	2, 3 PCLKB	2 ICLK
0008 8785h	MTU1	Timer status register	TSR	8	8	2, 3 PCLKB	2 ICLK
0008 8786h	MTU1	Timer counter	TCNT	16	16	2, 3 PCLKB	2 ICLK
0008 8788h	MTU1	Timer general register A	TGRA	16	16	2, 3 PCLKB	2 ICLK
0008 878Ah	MTU1	Timer general register B	TGRB	16	16	2, 3 PCLKB	2 ICLK
0008 8790h	MTU1	Timer input capture control register	TICCR	8	8	2, 3 PCLKB	2 ICLK
0008 8800h	MTU2	Timer control register	TCR	8	8	2, 3 PCLKB	2 ICLK
0008 8801h	MTU2	Timer mode register	TMDR	8	8	2, 3 PCLKB	2 ICLK
0008 8802h	MTU2	Timer I/O control register	TIOR	8	8	2, 3 PCLKB	2 ICLK
0008 8804h	MTU2	Timer interrupt enable register	TIER	8	8	2, 3 PCLKB	2 ICLK
0008 8805h	MTU2	Timer status register	TSR	8	8	2, 3 PCLKB	2 ICLK
0008 8806h	MTU2	Timer counter	TCNT	16	16	2, 3 PCLKB	2 ICLK
0008 8808h	MTU2	Timer general register A	TGRA	16	16	2, 3 PCLKB	2 ICLK
0008 880Ah	MTU2	Timer general register B	TGRB	16	16	2, 3 PCLKB	2 ICLK
0008 8880h	MTU5	Timer counter U	TCNTU	16	16	2, 3 PCLKB	2 ICLK
0008 8882h	MTU5	Timer general register U	TGRU	16	16	2, 3 PCLKB	2 ICLK
0008 8884h	MTU5	Timer control register U	TCRU	8	8	2, 3 PCLKB	2 ICLK
0008 8886h	MTU5	Timer I/O control register U	TIORU	8	8	2, 3 PCLKB	2 ICLK
0008 8890h	MTU5	Timer counter V	TCNTV	16	16	2, 3 PCLKB	2 ICLK
0008 8892h	MTU5	Timer general register V	TGRV	16	16	2, 3 PCLKB	2 ICLK
0008 8894h	MTU5	Timer control register V	TCRV	8	8	2, 3 PCLKB	2 ICLK

Table 4.1 List of I/O Registers (Address Order) (16 / 29)

Address	Module Symbol	Register Name	Register Symbol	Number of Bits	Access Size	Number of Access Cycles ICLK ≥ PCLK	Number of Access Cycles ICLK < PCLK
0008 8896h	MTU5	Timer I/O control register V	TIORV	8	8	2, 3 PCLKB	2 ICLK
0008 88A0h	MTU5	Timer counter W	TCNTW	16	16	2, 3 PCLKB	2 ICLK
0008 88A2h	MTU5	Timer general register W	TGRW	16	16	2, 3 PCLKB	2 ICLK
0008 88A4h	MTU5	Timer control register W	TCRW	8	8	2, 3 PCLKB	2 ICLK
0008 88A6h	MTU5	Timer I/O control register W	TIORW	8	8	2, 3 PCLKB	2 ICLK
0008 88B2h	MTU5	Timer interrupt enable register	TIER	8	8	2, 3 PCLKB	2 ICLK
0008 88B4h	MTU5	Timer start register	TSTR	8	8	2, 3 PCLKB	2 ICLK
0008 88B6h	MTU5	Timer compare match clear register	TCNTCMPCLR	8	8	2, 3 PCLKB	2 ICLK
0008 8900h	POE	Input level control/status register 1	ICSR1	16	8, 16	2, 3 PCLKB	2 ICLK
0008 8902h	POE	Output level control/status register 1	OCSR1	16	8, 16	2, 3 PCLKB	2 ICLK
0008 8908h	POE	Input level control/status register 2	ICSR2	16	8, 16	2, 3 PCLKB	2 ICLK
0008 890Ah	POE	Software port output enable register	SPOER	8	8	2, 3 PCLKB	2 ICLK
0008 890Bh	POE	Port output enable control register 1	POECR1	8	8	2, 3 PCLKB	2 ICLK
0008 890Ch	POE	Port output enable control register 2	POECR2	8	8	2, 3 PCLKB	2 ICLK
0008 890Eh	POE	Input level control/status register 3	ICSR3	16	8, 16	2, 3 PCLKB	2 ICLK
0008 9000h	S12AD	A/D control register	ADCSR	16	16	2, 3 PCLKB	2 ICLK
0008 9004h	S12AD	A/D channel select register A	ADANSA	16	16	2, 3 PCLKB	2 ICLK
0008 9008h	S12AD	A/D-converted value addition mode select register	ADADS	16	16	2, 3 PCLKB	2 ICLK
0008 900Ch	S12AD	A/D-converted value addition count select register	ADADC	8	8	2, 3 PCLKB	2 ICLK
0008 900Eh	S12AD	A/D control extended register	ADCER	16	16	2, 3 PCLKB	2 ICLK
0008 9010h	S12AD	A/D start trigger select register	ADSTRGR	16	16	2, 3 PCLKB	2 ICLK
0008 9012h	S12AD	A/D converted extended input control register	ADEXICR	16	16	2, 3 PCLKB	2 ICLK
0008 9014h	S12AD	A/D channel select register B	ADANSB	16	16	2, 3 PCLKB	2 ICLK
0008 9018h	S12AD	A/D double register	ADDBLDR	16	16	2, 3 PCLKB	2 ICLK
0008 901Ah	S12AD	A/D temperature sensor data register	ADTSDR	16	16	2, 3 PCLKB	2 ICLK
0008 901Ch	S12AD	A/D internal reference voltage data register	ADOCDR	16	16	2, 3 PCLKB	2 ICLK
0008 901Eh	S12AD	A/D self-diagnosis data register	ADRD	16	16	2, 3 PCLKB	2 ICLK
0008 9020h	S12AD	A/D data register 0	ADDR0	16	16	2, 3 PCLKB	2 ICLK
0008 9022h	S12AD	A/D data register 1	ADDR1	16	16	2, 3 PCLKB	2 ICLK
0008 9024h	S12AD	A/D data register 2	ADDR2	16	16	2, 3 PCLKB	2 ICLK
0008 9026h	S12AD	A/D data register 3	ADDR3	16	16	2, 3 PCLKB	2 ICLK
0008 9028h	S12AD	A/D data register 4	ADDR4	16	16	2, 3 PCLKB	2 ICLK
0008 902Ah	S12AD	A/D data register 5	ADDR5	16	16	2, 3 PCLKB	2 ICLK
0008 902Ch	S12AD	A/D data register 6	ADDR6	16	16	2, 3 PCLKB	2 ICLK
0008 902Eh	S12AD	A/D data register 7	ADDR7	16	16	2, 3 PCLKB	2 ICLK
0008 9030h	S12AD	A/D data register 8	ADDR8	16	16	2, 3 PCLKB	2 ICLK
0008 9032h	S12AD	A/D data register 9	ADDR9	16	16	2, 3 PCLKB	2 ICLK
0008 9034h	S12AD	A/D data register 10	ADDR10	16	16	2, 3 PCLKB	2 ICLK
0008 9036h	S12AD	A/D data register 11	ADDR11	16	16	2, 3 PCLKB	2 ICLK
0008 9038h	S12AD	A/D data register 12	ADDR12	16	16	2, 3 PCLKB	2 ICLK
0008 903Ah	S12AD	A/D data register 13	ADDR13	16	16	2, 3 PCLKB	2 ICLK
0008 903Ch	S12AD	A/D data register 14	ADDR14	16	16	2, 3 PCLKB	2 ICLK
0008 903Eh	S12AD	A/D data register 15	ADDR15	16	16	2, 3 PCLKB	2 ICLK
0008 9060h	S12AD	A/D sampling state register 0	ADSSTR0	8	8	2, 3 PCLKB	2 ICLK
0008 9061h	S12AD	A/D sampling state register L	ADSSTRL	8	8	2, 3 PCLKB	2 ICLK
0008 9066h	S12AD	A/D sample and hold circuit register	ADSHCR	16	16	2, 3 PCLKB	2 ICLK
0008 9070h	S12AD	A/D sampling state register T	ADSSTRT	8	8	2, 3 PCLKB	2 ICLK
0008 9071h	S12AD	A/D sampling state register O	ADSSTRO	8	8	2, 3 PCLKB	2 ICLK
0008 9073h	S12AD	A/D sampling state register 1	ADSSTR1	8	8	2, 3 PCLKB	2 ICLK
0008 9074h	S12AD	A/D sampling state register 2	ADSSTR2	8	8	2, 3 PCLKB	2 ICLK
0008 9075h	S12AD	A/D sampling state register 3	ADSSTR3	8	8	2, 3 PCLKB	2 ICLK

Table 4.1 List of I/O Registers (Address Order) (17 / 29)

Address	Module Symbol	Register Name	Register Symbol	Number of Bits	Access Size	Number of Access Cycles ICLK ≥ PCLK	Number of Access Cycles ICLK < PCLK
0008 9076h	S12AD	A/D sampling state register 4	ADSSTR4	8	8	2, 3 PCLKB	2 ICLK
0008 9077h	S12AD	A/D sampling state register 5	ADSSTR5	8	8	2, 3 PCLKB	2 ICLK
0008 9078h	S12AD	A/D sampling state register 6	ADSSTR6	8	8	2, 3 PCLKB	2 ICLK
0008 9079h	S12AD	A/D sampling state register 7	ADSSTR7	8	8	2, 3 PCLKB	2 ICLK
0008 907Ah	S12AD	A/D disconnecting detection control register	ADDISCR	8	8	2, 3 PCLKB	2 ICLK
0008 A000h	SCI0	Serial mode register	SMR	8	8	2, 3 PCLKB	2 ICLK
0008 A001h	SCI0	Bit rate register	BRR	8	8	2, 3 PCLKB	2 ICLK
0008 A002h	SCI0	Serial control register	SCR	8	8	2, 3 PCLKB	2 ICLK
0008 A003h	SCI0	Transmit data register	TDR	8	8	2, 3 PCLKB	2 ICLK
0008 A004h	SCI0	Serial status register	SSR	8	8	2, 3 PCLKB	2 ICLK
0008 A005h	SCI0	Receive data register	RDR	8	8	2, 3 PCLKB	2 ICLK
0008 A006h	SCI0	Smart card mode register	SCMR	8	8	2, 3 PCLKB	2 ICLK
0008 A007h	SCI0	Serial extended mode register	SEMR	8	8	2, 3 PCLKB	2 ICLK
0008 A008h	SCI0	Noise filter setting register	SNFR	8	8	2, 3 PCLKB	2 ICLK
0008 A009h	SCI0	I^2C mode register 1	SIMR1	8	8	2, 3 PCLKB	2 ICLK
0008 A00Ah	SCI0	I^2C mode register 2	SIMR2	8	8	2, 3 PCLKB	2 ICLK
0008 A00Bh	SCI0	I^2C mode register 3	SIMR3	8	8	2, 3 PCLKB	2 ICLK
0008 A00Ch	SCI0	I^2C status register	SISR	8	8	2, 3 PCLKB	2 ICLK
0008 A00Dh	SCI0	SPI mode register	SPMR	8	8	2, 3 PCLKB	2 ICLK
0008 A020h	SCI1	Serial mode register	SMR	8	8	2, 3 PCLKB	2 ICLK
0008 A021h	SCI1	Bit rate register	BRR	8	8	2, 3 PCLKB	2 ICLK
0008 A022h	SCI1	Serial control register	SCR	8	8	2, 3 PCLKB	2 ICLK
0008 A023h	SCI1	Transmit data register	TDR	8	8	2, 3 PCLKB	2 ICLK
0008 A024h	SCI1	Serial status register	SSR	8	8	2, 3 PCLKB	2 ICLK
0008 A025h	SCI1	Receive data register	RDR	8	8	2, 3 PCLKB	2 ICLK
0008 A026h	SCI1	Smart card mode register	SCMR	8	8	2, 3 PCLKB	2 ICLK
0008 A027h	SCI1	Serial extended mode register	SEMR	8	8	2, 3 PCLKB	2 ICLK
0008 A028h	SCI1	Noise filter setting register	SNFR	8	8	2, 3 PCLKB	2 ICLK
0008 A029h	SCI1	I^2C mode register 1	SIMR1	8	8	2, 3 PCLKB	2 ICLK
0008 A02Ah	SCI1	I^2C mode register 2	SIMR2	8	8	2, 3 PCLKB	2 ICLK
0008 A02Bh	SCI1	I^2C mode register 3	SIMR3	8	8	2, 3 PCLKB	2 ICLK
0008 A02Ch	SCI1	I^2C status register	SISR	8	8	2, 3 PCLKB	2 ICLK
0008 A02Dh	SCI1	SPI mode register	SPMR	8	8	2, 3 PCLKB	2 ICLK
0008 A040h	SCI2	Serial mode register	SMR	8	8	2, 3 PCLKB	2 ICLK
0008 A041h	SCI2	Bit rate register	BRR	8	8	2, 3 PCLKB	2 ICLK
0008 A042h	SCI2	Serial control register	SCR	8	8	2, 3 PCLKB	2 ICLK
0008 A043h	SCI2	Transmit data register	TDR	8	8	2, 3 PCLKB	2 ICLK
0008 A044h	SCI2	Serial status register	SSR	8	8	2, 3 PCLKB	2 ICLK
0008 A045h	SCI2	Receive data register	RDR	8	8	2, 3 PCLKB	2 ICLK
0008 A046h	SCI2	Smart card mode register	SCMR	8	8	2, 3 PCLKB	2 ICLK
0008 A047h	SCI2	Serial extended mode register	SEMR	8	8	2, 3 PCLKB	2 ICLK
0008 A048h	SCI2	Noise filter setting register	SNFR	8	8	2, 3 PCLKB	2 ICLK
0008 A049h	SCI2	I^2C mode register 1	SIMR1	8	8	2, 3 PCLKB	2 ICLK
0008 A04Ah	SCI2	I^2C mode register 2	SIMR2	8	8	2, 3 PCLKB	2 ICLK
0008 A04Bh	SCI2	I^2C mode register 3	SIMR3	8	8	2, 3 PCLKB	2 ICLK
0008 A04Ch	SCI2	I^2C status register	SISR	8	8	2, 3 PCLKB	2 ICLK
0008 A04Dh	SCI2	SPI mode register	SPMR	8	8	2, 3 PCLKB	2 ICLK
0008 A060h	SCI3	Serial mode register	SMR	8	8	2, 3 PCLKB	2 ICLK
0008 A061h	SCI3	Bit rate register	BRR	8	8	2, 3 PCLKB	2 ICLK
0008 A062h	SCI3	Serial control register	SCR	8	8	2, 3 PCLKB	2 ICLK
0008 A063h	SCI3	Transmit data register	TDR	8	8	2, 3 PCLKB	2 ICLK

Table 4.1 List of I/O Registers (Address Order) (18 / 29)

Address	Module Symbol	Register Name	Register Symbol	Number of Bits	Access Size	Number of Access Cycles ICLK ≥ PCLK	Number of Access Cycles ICLK < PCLK
0008 A064h	SCI3	Serial status register	SSR	8	8	2, 3 PCLKB	2 ICLK
0008 A065h	SCI3	Receive data register	RDR	8	8	2, 3 PCLKB	2 ICLK
0008 A066h	SCI3	Smart card mode register	SCMR	8	8	2, 3 PCLKB	2 ICLK
0008 A067h	SCI3	Serial extended mode register	SEMR	8	8	2, 3 PCLKB	2 ICLK
0008 A068h	SCI3	Noise filter setting register	SNFR	8	8	2, 3 PCLKB	2 ICLK
0008 A069h	SCI3	I^2C mode register 1	SIMR1	8	8	2, 3 PCLKB	2 ICLK
0008 A06Ah	SCI3	I^2C mode register 2	SIMR2	8	8	2, 3 PCLKB	2 ICLK
0008 A06Bh	SCI3	I^2C mode register 3	SIMR3	8	8	2, 3 PCLKB	2 ICLK
0008 A06Ch	SCI3	I^2C status register	SISR	8	8	2, 3 PCLKB	2 ICLK
0008 A06Dh	SCI3	SPI mode register	SPMR	8	8	2, 3 PCLKB	2 ICLK
0008 A080h	SCI4	Serial mode register	SMR	8	8	2, 3 PCLKB	2 ICLK
0008 A081h	SCI4	Bit rate register	BRR	8	8	2, 3 PCLKB	2 ICLK
0008 A082h	SCI4	Serial control register	SCR	8	8	2, 3 PCLKB	2 ICLK
0008 A083h	SCI4	Transmit data register	TDR	8	8	2, 3 PCLKB	2 ICLK
0008 A084h	SCI4	Serial status register	SSR	8	8	2, 3 PCLKB	2 ICLK
0008 A085h	SCI4	Receive data register	RDR	8	8	2, 3 PCLKB	2 ICLK
0008 A086h	SCI4	Smart card mode register	SCMR	8	8	2, 3 PCLKB	2 ICLK
0008 A087h	SCI4	Serial extended mode register	SEMR	8	8	2, 3 PCLKB	2 ICLK
0008 A088h	SCI4	Noise filter setting register	SNFR	8	8	2, 3 PCLKB	2 ICLK
0008 A089h	SCI4	I^2C mode register 1	SIMR1	8	8	2, 3 PCLKB	2 ICLK
0008 A08Ah	SCI4	I^2C mode register 2	SIMR2	8	8	2, 3 PCLKB	2 ICLK
0008 A08Bh	SCI4	I^2C mode register 3	SIMR3	8	8	2, 3 PCLKB	2 ICLK
0008 A08Ch	SCI4	I^2C status register	SISR	8	8	2, 3 PCLKB	2 ICLK
0008 A08Dh	SCI4	SPI mode register	SPMR	8	8	2, 3 PCLKB	2 ICLK
0008 A0A0h	SCI5	Serial mode register	SMR	8	8	2, 3 PCLKB	2 ICLK
0008 A0A1h	SCI5	Bit rate register	BRR	8	8	2, 3 PCLKB	2 ICLK
0008 A0A2h	SCI5	Serial control register	SCR	8	8	2, 3 PCLKB	2 ICLK
0008 A0A3h	SCI5	Transmit data register	TDR	8	8	2, 3 PCLKB	2 ICLK
0008 A0A4h	SCI5	Serial status register	SSR	8	8	2, 3 PCLKB	2 ICLK
0008 A0A5h	SCI5	Receive data register	RDR	8	8	2, 3 PCLKB	2 ICLK
0008 A0A6h	SCI5	Smart card mode register	SCMR	8	8	2, 3 PCLKB	2 ICLK
0008 A0A7h	SCI5	Serial extended mode register	SEMR	8	8	2, 3 PCLKB	2 ICLK
0008 A0A8h	SCI5	Noise filter setting register	SNFR	8	8	2, 3 PCLKB	2 ICLK
0008 A0A9h	SCI5	I^2C mode register 1	SIMR1	8	8	2, 3 PCLKB	2 ICLK
0008 A0AAh	SCI5	I^2C mode register 2	SIMR2	8	8	2, 3 PCLKB	2 ICLK
0008 A0ABh	SCI5	I^2C mode register 3	SIMR3	8	8	2, 3 PCLKB	2 ICLK
0008 A0ACh	SCI5	I^2C status register	SISR	8	8	2, 3 PCLKB	2 ICLK
0008 A0ADh	SCI5	SPI mode register	SPMR	8	8	2, 3 PCLKB	2 ICLK
0008 A0C0h	SCI6	Serial mode register	SMR	8	8	2, 3 PCLKB	2 ICLK
0008 A0C1h	SCI6	Bit rate register	BRR	8	8	2, 3 PCLKB	2 ICLK
0008 A0C2h	SCI6	Serial control register	SCR	8	8	2, 3 PCLKB	2 ICLK
0008 A0C3h	SCI6	Transmit data register	TDR	8	8	2, 3 PCLKB	2 ICLK
0008 A0C4h	SCI6	Serial status register	SSR	8	8	2, 3 PCLKB	2 ICLK
0008 A0C5h	SCI6	Receive data register	RDR	8	8	2, 3 PCLKB	2 ICLK
0008 A0C6h	SCI6	Smart card mode register	SCMR	8	8	2, 3 PCLKB	2 ICLK
0008 A0C7h	SCI6	Serial extended mode register	SEMR	8	8	2, 3 PCLKB	2 ICLK
0008 A0C8h	SCI6	Noise filter setting register	SNFR	8	8	2, 3 PCLKB	2 ICLK
0008 A0C9h	SCI6	I^2C mode register 1	SIMR1	8	8	2, 3 PCLKB	2 ICLK
0008 A0CAh	SCI6	I^2C mode register 2	SIMR2	8	8	2, 3 PCLKB	2 ICLK
0008 A0CBh	SCI6	I^2C mode register 3	SIMR3	8	8	2, 3 PCLKB	2 ICLK
0008 A0CCh	SCI6	I^2C status register	SISR	8	8	2, 3 PCLKB	2 ICLK

Table 4.1 List of I/O Registers (Address Order) (19 / 29)

Address	Module Symbol	Register Name	Register Symbol	Number of Bits	Access Size	Number of Access Cycles ICLK ≥ PCLK	Number of Access Cycles ICLK < PCLK
0008 A0CDh	SCI6	SPI mode register	SPMR	8	8	2, 3 PCLKB	2 ICLK
0008 A0E0h	SCI7	Serial mode register	SMR	8	8	2, 3 PCLKB	2 ICLK
0008 A0E1h	SCI7	Bit rate register	BRR	8	8	2, 3 PCLKB	2 ICLK
0008 A0E2h	SCI7	Serial control register	SCR	8	8	2, 3 PCLKB	2 ICLK
0008 A0E3h	SCI7	Transmit data register	TDR	8	8	2, 3 PCLKB	2 ICLK
0008 A0E4h	SCI7	Serial status register	SSR	8	8	2, 3 PCLKB	2 ICLK
0008 A0E5h	SCI7	Receive data register	RDR	8	8	2, 3 PCLKB	2 ICLK
0008 A0E6h	SCI7	Smart card mode register	SCMR	8	8	2, 3 PCLKB	2 ICLK
0008 A0E7h	SCI7	Serial extended mode register	SEMR	8	8	2, 3 PCLKB	2 ICLK
0008 A0E8h	SCI7	Noise filter setting register	SNFR	8	8	2, 3 PCLKB	2 ICLK
0008 A0E9h	SCI7	I^2C mode register 1	SIMR1	8	8	2, 3 PCLKB	2 ICLK
0008 A0EAh	SCI7	I^2C mode register 2	SIMR2	8	8	2, 3 PCLKB	2 ICLK
0008 A0EBh	SCI7	I^2C mode register 3	SIMR3	8	8	2, 3 PCLKB	2 ICLK
0008 A0ECh	SCI7	I^2C status register	SISR	8	8	2, 3 PCLKB	2 ICLK
0008 A0EDh	SCI7	SPI mode register	SPMR	8	8	2, 3 PCLKB	2 ICLK
0008 A100h	SCI8	Serial mode register	SMR	8	8	2, 3 PCLKB	2 ICLK
0008 A101h	SCI8	Bit rate register	BRR	8	8	2, 3 PCLKB	2 ICLK
0008 A102h	SCI8	Serial control register	SCR	8	8	2, 3 PCLKB	2 ICLK
0008 A103h	SCI8	Transmit data register	TDR	8	8	2, 3 PCLKB	2 ICLK
0008 A104h	SCI8	Serial status register	SSR	8	8	2, 3 PCLKB	2 ICLK
0008 A105h	SCI8	Receive data register	RDR	8	8	2, 3 PCLKB	2 ICLK
0008 A106h	SCI8	Smart card mode register	SCMR	8	8	2, 3 PCLKB	2 ICLK
0008 A107h	SCI8	Serial extended mode register	SEMR	8	8	2, 3 PCLKB	2 ICLK
0008 A108h	SCI8	Noise filter setting register	SNFR	8	8	2, 3 PCLKB	2 ICLK
0008 A109h	SCI8	I^2C mode register 1	SIMR1	8	8	2, 3 PCLKB	2 ICLK
0008 A10Ah	SCI8	I^2C mode register 2	SIMR2	8	8	2, 3 PCLKB	2 ICLK
0008 A10Bh	SCI8	I^2C mode register 3	SIMR3	8	8	2, 3 PCLKB	2 ICLK
0008 A10Ch	SCI8	I^2C status register	SISR	8	8	2, 3 PCLKB	2 ICLK
0008 A10Dh	SCI8	SPI mode register	SPMR	8	8	2, 3 PCLKB	2 ICLK
0008 A120h	SCI9	Serial mode register	SMR	8	8	2, 3 PCLKB	2 ICLK
0008 A121h	SCI9	Bit rate register	BRR	8	8	2, 3 PCLKB	2 ICLK
0008 A122h	SCI9	Serial control register	SCR	8	8	2, 3 PCLKB	2 ICLK
0008 A123h	SCI9	Transmit data register	TDR	8	8	2, 3 PCLKB	2 ICLK
0008 A124h	SCI9	Serial status register	SSR	8	8	2, 3 PCLKB	2 ICLK
0008 A125h	SCI9	Receive data register	RDR	8	8	2, 3 PCLKB	2 ICLK
0008 A126h	SCI9	Smart card mode register	SCMR	8	8	2, 3 PCLKB	2 ICLK
0008 A127h	SCI9	Serial extended mode register	SEMR	8	8	2, 3 PCLKB	2 ICLK
0008 A128h	SCI9	Noise filter setting register	SNFR	8	8	2, 3 PCLKB	2 ICLK
0008 A129h	SCI9	I^2C mode register 1	SIMR1	8	8	2, 3 PCLKB	2 ICLK
0008 A12Ah	SCI9	I^2C mode register 2	SIMR2	8	8	2, 3 PCLKB	2 ICLK
0008 A12Bh	SCI9	I^2C mode register 3	SIMR3	8	8	2, 3 PCLKB	2 ICLK
0008 A12Ch	SCI9	I^2C status register	SISR	8	8	2, 3 PCLKB	2 ICLK
0008 A12Dh	SCI9	SPI mode register	SPMR	8	8	2, 3 PCLKB	2 ICLK
0008 A140h	SCI10	Serial mode register	SMR	8	8	2, 3 PCLKB	2 ICLK
0008 A141h	SCI10	Bit rate register	BRR	8	8	2, 3 PCLKB	2 ICLK
0008 A142h	SCI10	Serial control register	SCR	8	8	2, 3 PCLKB	2 ICLK
0008 A143h	SCI10	Transmit data register	TDR	8	8	2, 3 PCLKB	2 ICLK
0008 A144h	SCI10	Serial status register	SSR	8	8	2, 3 PCLKB	2 ICLK
0008 A145h	SCI10	Receive data register	RDR	8	8	2, 3 PCLKB	2 ICLK
0008 A146h	SCI10	Smart card mode register	SCMR	8	8	2, 3 PCLKB	2 ICLK
0008 A147h	SCI10	Serial extended mode register	SEMR	8	8	2, 3 PCLKB	2 ICLK

Table 4.1 List of I/O Registers (Address Order) (20 / 29)

Address	Module Symbol	Register Name	Register Symbol	Number of Bits	Access Size	Number of Access Cycles ICLK ≥ PCLK	Number of Access Cycles ICLK < PCLK
0008 A148h	SCI10	Noise filter setting register	SNFR	8	8	2, 3 PCLKB	2 ICLK
0008 A149h	SCI10	I2C mode register 1	SIMR1	8	8	2, 3 PCLKB	2 ICLK
0008 A14Ah	SCI10	I2C mode register 2	SIMR2	8	8	2, 3 PCLKB	2 ICLK
0008 A14Bh	SCI10	I2C mode register 3	SIMR3	8	8	2, 3 PCLKB	2 ICLK
0008 A14Ch	SCI10	I2C status register	SISR	8	8	2, 3 PCLKB	2 ICLK
0008 A14Dh	SCI10	SPI mode register	SPMR	8	8	2, 3 PCLKB	2 ICLK
0008 A160h	SCI11	Serial mode register	SMR	8	8	2, 3 PCLKB	2 ICLK
0008 A161h	SCI11	Bit rate register	BRR	8	8	2, 3 PCLKB	2 ICLK
0008 A162h	SCI11	Serial control register	SCR	8	8	2, 3 PCLKB	2 ICLK
0008 A163h	SCI11	Transmit data register	TDR	8	8	2, 3 PCLKB	2 ICLK
0008 A164h	SCI11	Serial status register	SSR	8	8	2, 3 PCLKB	2 ICLK
0008 A165h	SCI11	Receive data register	RDR	8	8	2, 3 PCLKB	2 ICLK
0008 A166h	SCI11	Smart card mode register	SCMR	8	8	2, 3 PCLKB	2 ICLK
0008 A167h	SCI11	Serial extended mode register	SEMR	8	8	2, 3 PCLKB	2 ICLK
0008 A168h	SCI11	Noise filter setting register	SNFR	8	8	2, 3 PCLKB	2 ICLK
0008 A169h	SCI11	I2C mode register 1	SIMR1	8	8	2, 3 PCLKB	2 ICLK
0008 A16Ah	SCI11	I2C mode register 2	SIMR2	8	8	2, 3 PCLKB	2 ICLK
0008 A16Bh	SCI11	I2C mode register 3	SIMR3	8	8	2, 3 PCLKB	2 ICLK
0008 A16Ch	SCI11	I2C status register	SISR	8	8	2, 3 PCLKB	2 ICLK
0008 A16Dh	SCI11	SPI mode register	SPMR	8	8	2, 3 PCLKB	2 ICLK
0008 B000h	CAC	CAC control register 0	CACR0	8	8	2, 3 PCLKB	2 ICLK
0008 B001h	CAC	CAC control register 1	CACR1	8	8	2, 3 PCLKB	2 ICLK
0008 B002h	CAC	CAC control register 2	CACR2	8	8	2, 3 PCLKB	2 ICLK
0008 B003h	CAC	CAC interrupt control register	CAICR	8	8	2, 3 PCLKB	2 ICLK
0008 B004h	CAC	CAC status register	CASTR	8	8	2, 3 PCLKB	2 ICLK
0008 B006h	CAC	CAC upper-limit value setting register	CAULVR	16	16	2, 3 PCLKB	2 ICLK
0008 B008h	CAC	CAC lower-limit value setting register	CALLVR	16	16	2, 3 PCLKB	2 ICLK
0008 B00Ah	CAC	CAC counter buffer register	CACNTBR	16	16	2, 3 PCLKB	2 ICLK
0008 B080h	DOC	DOC control register	DOCR	8	8	2, 3 PCLKB	2 ICLK
0008 B082h	DOC	DOC data input register	DODIR	16	16	2, 3 PCLKB	2 ICLK
0008 B084h	DOC	DOC data setting register	DODSR	16	16	2, 3 PCLKB	2 ICLK
0008 B100h	ELC	Event link control register	ELCR	8	8	2, 3 PCLKB	2 ICLK
0008 B102h	ELC	Event link setting register 1	ELSR1	8	8	2, 3 PCLKB	2 ICLK
0008 B103h	ELC	Event link setting register 2	ELSR2	8	8	2, 3 PCLKB	2 ICLK
0008 B104h	ELC	Event link setting register 3	ELSR3	8	8	2, 3 PCLKB	2 ICLK
0008 B105h	ELC	Event link setting register 4	ELSR4	8	8	2, 3 PCLKB	2 ICLK
0008 B108h	ELC	Event link setting register 7	ELSR7	8	8	2, 3 PCLKB	2 ICLK
0008 B10Bh	ELC	Event link setting register 10	ELSR10	8	8	2, 3 PCLKB	2 ICLK
0008 B10Dh	ELC	Event link setting register 12	ELSR12	8	8	2, 3 PCLKB	2 ICLK
0008 B110h	ELC	Event link setting register 15	ELSR15	8	8	2, 3 PCLKB	2 ICLK
0008 B111h	ELC	Event link setting register 16	ELSR16	8	8	2, 3 PCLKB	2 ICLK
0008 B113h	ELC	Event link setting register 18	ELSR18	8	8	2, 3 PCLKB	2 ICLK
0008 B114h	ELC	Event link setting register 19	ELSR19	8	8	2, 3 PCLKB	2 ICLK
0008 B115h	ELC	Event link setting register 20	ELSR20	8	8	2, 3 PCLKB	2 ICLK
0008 B116h	ELC	Event link setting register 21	ELSR21	8	8	2, 3 PCLKB	2 ICLK
0008 B117h	ELC	Event link setting register 22	ELSR22	8	8	2, 3 PCLKB	2 ICLK
0008 B118h	ELC	Event link setting register 23	ELSR23	8	8	2, 3 PCLKB	2 ICLK
0008 B119h	ELC	Event link setting register 24	ELSR24	8	8	2, 3 PCLKB	2 ICLK
0008 B11Ah	ELC	Event link setting register 25	ELSR25	8	8	2, 3 PCLKB	2 ICLK
0008 B11Bh	ELC	Event link setting register 26	ELSR26	8	8	2, 3 PCLKB	2 ICLK
0008 B11Ch	ELC	Event link setting register 27	ELSR27	8	8	2, 3 PCLKB	2 ICLK

Table 4.1 List of I/O Registers (Address Order) (21 / 29)

Address	Module Symbol	Register Name	Register Symbol	Number of Bits	Access Size	Number of Access Cycles ICLK ≥ PCLK	Number of Access Cycles ICLK < PCLK
0008 B11Dh	ELC	Event link setting register 28	ELSR28	8	8	2, 3 PCLKB	2 ICLK
0008 B11Eh	ELC	Event link setting register 29	ELSR29	8	8	2, 3 PCLKB	2 ICLK
0008 B11Fh	ELC	Event link option setting register A	ELOPA	8	8	2, 3 PCLKB	2 ICLK
0008 B120h	ELC	Event link option setting register B	ELOPB	8	8	2, 3 PCLKB	2 ICLK
0008 B121h	ELC	Event link option setting register C	ELOPC	8	8	2, 3 PCLKB	2 ICLK
0008 B122h	ELC	Event link option setting register D	ELOPD	8	8	2, 3 PCLKB	2 ICLK
0008 B123h	ELC	Port group setting register 1	PGR1	8	8	2, 3 PCLKB	2 ICLK
0008 B124h	ELC	Port group setting register 2	PGR2	8	8	2, 3 PCLKB	2 ICLK
0008 B125h	ELC	Port group control register 1	PGC1	8	8	2, 3 PCLKB	2 ICLK
0008 B126h	ELC	Port group control register 2	PGC2	8	8	2, 3 PCLKB	2 ICLK
0008 B127h	ELC	Port buffer register 1	PDBF1	8	8	2, 3 PCLKB	2 ICLK
0008 B128h	ELC	Port buffer register 2	PDBF2	8	8	2, 3 PCLKB	2 ICLK
0008 B129h	ELC	Event link port setting register 0	PEL0	8	8	2, 3 PCLKB	2 ICLK
0008 B12Ah	ELC	Event link port setting register 1	PEL1	8	8	2, 3 PCLKB	2 ICLK
0008 B12Bh	ELC	Event link port setting register 2	PEL2	8	8	2, 3 PCLKB	2 ICLK
0008 B12Ch	ELC	Event link port setting register 3	PEL3	8	8	2, 3 PCLKB	2 ICLK
0008 B12Dh	ELC	Event link software event generation register	ELSEGR	8	8	2, 3 PCLKB	2 ICLK
0008 B300h	SCI12	Serial mode register	SMR	8	8	2, 3 PCLKB	2 ICLK
0008 B301h	SCI12	Bit rate register	BRR	8	8	2, 3 PCLKB	2 ICLK
0008 B302h	SCI12	Serial control register	SCR	8	8	2, 3 PCLKB	2 ICLK
0008 B303h	SCI12	Transmit data register	TDR	8	8	2, 3 PCLKB	2 ICLK
0008 B304h	SCI12	Serial status register	SSR	8	8	2, 3 PCLKB	2 ICLK
0008 B305h	SCI12	Receive data register	RDR	8	8	2, 3 PCLKB	2 ICLK
0008 B306h	SCI12	Smart card mode register	SCMR	8	8	2, 3 PCLKB	2 ICLK
0008 B307h	SCI12	Serial extended mode register	SEMR	8	8	2, 3 PCLKB	2 ICLK
0008 B308h	SCI12	Noise filter setting register	SNFR	8	8	2, 3 PCLKB	2 ICLK
0008 B309h	SCI12	I^2C mode register 1	SIMR1	8	8	2, 3 PCLKB	2 ICLK
0008 B30Ah	SCI12	I^2C mode register 2	SIMR2	8	8	2, 3 PCLKB	2 ICLK
0008 B30Bh	SCI12	I^2C mode register 3	SIMR3	8	8	2, 3 PCLKB	2 ICLK
0008 B30Ch	SCI12	I^2C status register	SISR	8	8	2, 3 PCLKB	2 ICLK
0008 B30Dh	SCI12	SPI mode register	SPMR	8	8	2, 3 PCLKB	2 ICLK
0008 B320h	SCI12	Extended serial mode enable register	ESMER	8	8	2, 3 PCLKB	2 ICLK
0008 B321h	SCI12	Control register 0	CR0	8	8	2, 3 PCLKB	2 ICLK
0008 B322h	SCI12	Control register 1	CR1	8	8	2, 3 PCLKB	2 ICLK
0008 B323h	SCI12	Control register 2	CR2	8	8	2, 3 PCLKB	2 ICLK
0008 B324h	SCI12	Control register 3	CR3	8	8	2, 3 PCLKB	2 ICLK
0008 B325h	SCI12	Port control register	PCR	8	8	2, 3 PCLKB	2 ICLK
0008 B326h	SCI12	Interrupt control register	ICR	8	8	2, 3 PCLKB	2 ICLK
0008 B327h	SCI12	Status register	STR	8	8	2, 3 PCLKB	2 ICLK
0008 B328h	SCI12	Status clear register	STCR	8	8	2, 3 PCLKB	2 ICLK
0008 B329h	SCI12	Control Field 0 data register	CF0DR	8	8	2, 3 PCLKB	2 ICLK
0008 B32Ah	SCI12	Control Field 0 compare enable register	CF0CR	8	8	2, 3 PCLKB	2 ICLK
0008 B32Bh	SCI12	Control Field 0 receive data register	CF0RR	8	8	2, 3 PCLKB	2 ICLK
0008 B32Ch	SCI12	Primary control field 1 data register	PCF1DR	8	8	2, 3 PCLKB	2 ICLK
0008 B32Dh	SCI12	Secondary control field 1 data register	SCF1DR	8	8	2, 3 PCLKB	2 ICLK
0008 B32Eh	SCI12	Control field 1 compare enable register	CF1CR	8	8	2, 3 PCLKB	2 ICLK
0008 B32Fh	SCI12	Control field 1 receive data register	CF1RR	8	8	2, 3 PCLKB	2 ICLK
0008 B330h	SCI12	Timer control register	TCR	8	8	2, 3 PCLKB	2 ICLK
0008 B331h	SCI12	Timer mode register	TMR	8	8	2, 3 PCLKB	2 ICLK
0008 B332h	SCI12	Timer prescaler register	TPRE	8	8	2, 3 PCLKB	2 ICLK
0008 B333h	SCI12	Timer count register	TCNT	8	8	2, 3 PCLKB	2 ICLK

Table 4.1 List of I/O Registers (Address Order) (22 / 29)

Address	Module Symbol	Register Name	Register Symbol	Number of Bits	Access Size	Number of Access Cycles ICLK ≥ PCLK	Number of Access Cycles ICLK < PCLK
0008 C000h	PORT0	Port direction register	PDR	8	8	2, 3 PCLKB	2 ICLK
0008 C001h	PORT1	Port direction register	PDR	8	8	2, 3 PCLKB	2 ICLK
0008 C002h	PORT2	Port direction register	PDR	8	8	2, 3 PCLKB	2 ICLK
0008 C003h	PORT3	Port direction register	PDR	8	8	2, 3 PCLKB	2 ICLK
0008 C004h	PORT4	Port direction register	PDR	8	8	2, 3 PCLKB	2 ICLK
0008 C005h	PORT5	Port direction register	PDR	8	8	2, 3 PCLKB	2 ICLK
0008 C006h	PORT6	Port direction register	PDR	8	8	2, 3 PCLKB	2 ICLK
0008 C007h	PORT7	Port direction register	PDR	8	8	2, 3 PCLKB	2 ICLK
0008 C008h	PORT8	Port direction register	PDR	8	8	2, 3 PCLKB	2 ICLK
0008 C009h	PORT9	Port direction register	PDR	8	8	2, 3 PCLKB	2 ICLK
0008 C00Ah	PORTA	Port direction register	PDR	8	8	2, 3 PCLKB	2 ICLK
0008 C00Bh	PORTB	Port direction register	PDR	8	8	2, 3 PCLKB	2 ICLK
0008 C00Ch	PORTC	Port direction register	PDR	8	8	2, 3 PCLKB	2 ICLK
0008 C00Dh	PORTD	Port direction register	PDR	8	8	2, 3 PCLKB	2 ICLK
0008 C00Eh	PORTE	Port direction register	PDR	8	8	2, 3 PCLKB	2 ICLK
0008 C00Fh	PORTF	Port direction register	PDR	8	8	2, 3 PCLKB	2 ICLK
0008 C011h	PORTH	Port direction register	PDR	8	8	2, 3 PCLKB	2 ICLK
0008 C012h	PORTJ	Port direction register	PDR	8	8	2, 3 PCLKB	2 ICLK
0008 C013h	PORTK	Port direction register	PDR	8	8	2, 3 PCLKB	2 ICLK
0008 C014h	PORTL	Port direction register	PDR	8	8	2, 3 PCLKB	2 ICLK
0008 C020h	PORT0	Port output data register	PODR	8	8	2, 3 PCLKB	2 ICLK
0008 C021h	PORT1	Port output data register	PODR	8	8	2, 3 PCLKB	2 ICLK
0008 C022h	PORT2	Port output data register	PODR	8	8	2, 3 PCLKB	2 ICLK
0008 C023h	PORT3	Port output data register	PODR	8	8	2, 3 PCLKB	2 ICLK
0008 C024h	PORT4	Port output data register	PODR	8	8	2, 3 PCLKB	2 ICLK
0008 C025h	PORT5	Port output data register	PODR	8	8	2, 3 PCLKB	2 ICLK
0008 C026h	PORT6	Port output data register	PODR	8	8	2, 3 PCLKB	2 ICLK
0008 C027h	PORT7	Port output data register	PODR	8	8	2, 3 PCLKB	2 ICLK
0008 C028h	PORT8	Port output data register	PODR	8	8	2, 3 PCLKB	2 ICLK
0008 C029h	PORT9	Port output data register	PODR	8	8	2, 3 PCLKB	2 ICLK
0008 C02Ah	PORTA	Port output data register	PODR	8	8	2, 3 PCLKB	2 ICLK
0008 C02Bh	PORTB	Port output data register	PODR	8	8	2, 3 PCLKB	2 ICLK
0008 C02Ch	PORTC	Port output data register	PODR	8	8	2, 3 PCLKB	2 ICLK
0008 C02Eh	PORTE	Port output data register	PODR	8	8	2, 3 PCLKB	2 ICLK
0008 C02Fh	PORTF	Port output data register	PODR	8	8	2, 3 PCLKB	2 ICLK
0008 C031h	PORTH	Port output data register	PODR	8	8	2, 3 PCLKB	2 ICLK
0008 C032h	PORTJ	Port output data register	PODR	8	8	2, 3 PCLKB	2 ICLK
0008 C033h	PORTK	Port output data register	PODR	8	8	2, 3 PCLKB	2 ICLK
0008 C034h	PORTL	Port output data register	PODR	8	8	2, 3 PCLKB	2 ICLK
0008 C040h	PORT0	Port input data register	PIDR	8	8	3 or 4 PCLKB cycles when reading, 2 or 3 PCLKB cycles when writing	3 ICLK cycles when reading, 2 ICLK cycles when writing
0008 C041h	PORT1	Port input data register	PIDR	8	8	3 or 4 PCLKB cycles when reading, 2 or 3 PCLKB cycles when writing	3 ICLK cycles when reading, 2 ICLK cycles when writing

Table 4.1 List of I/O Registers (Address Order) (23 / 29)

Address	Module Symbol	Register Name	Register Symbol	Number of Bits	Access Size	Number of Access Cycles ICLK ≥ PCLK	Number of Access Cycles ICLK < PCLK
0008 C042h	PORT2	Port input data register	PIDR	8	8	3 or 4 PCLKB cycles when reading, 2 or 3 PCLKB cycles when writing	3 ICLK cycles when reading, 2 ICLK cycles when writing
0008 C043h	PORT3	Port input data register	PIDR	8	8	3 or 4 PCLKB cycles when reading, 2 or 3 PCLKB cycles when writing	3 ICLK cycles when reading, 2 ICLK cycles when writing
0008 C044h	PORT4	Port input data register	PIDR	8	8	3 or 4 PCLKB cycles when reading, 2 or 3 PCLKB cycles when writing	3 ICLK cycles when reading, 2 ICLK cycles when writing
0008 C045h	PORT5	Port input data register	PIDR	8	8	3 or 4 PCLKB cycles when reading, 2 or 3 PCLKB cycles when writing	3 ICLK cycles when reading, 2 ICLK cycles when writing
0008 C046h	PORT6	Port input data register	PIDR	8	8	3 or 4 PCLKB cycles when reading, 2 or 3 PCLKB cycles when writing	3 ICLK cycles when reading, 2 ICLK cycles when writing
0008 C047h	PORT7	Port input data register	PIDR	8	8	3 or 4 PCLKB cycles when reading, 2 or 3 PCLKB cycles when writing	3 ICLK cycles when reading, 2 ICLK cycles when writing
0008 C048h	PORT8	Port input data register	PIDR	8	8	3 or 4 PCLKB cycles when reading, 2 or 3 PCLKB cycles when writing	3 ICLK cycles when reading, 2 ICLK cycles when writing
0008 C049h	PORT9	Port input data register	PIDR	8	8	3 or 4 PCLKB cycles when reading, 2 or 3 PCLKB cycles when writing	3 ICLK cycles when reading, 2 ICLK cycles when writing
0008 C04Ah	PORTA	Port input data register	PIDR	8	8	3 or 4 PCLKB cycles when reading, 2 or 3 PCLKB cycles when writing	3 ICLK cycles when reading, 2 ICLK cycles when writing
0008 C04Bh	PORTB	Port input data register	PIDR	8	8	3 or 4 PCLKB cycles when reading, 2 or 3 PCLKB cycles when writing	3 ICLK cycles when reading, 2 ICLK cycles when writing

Table 4.1 List of I/O Registers (Address Order) (24 / 29)

Address	Module Symbol	Register Name	Register Symbol	Number of Bits	Access Size	Number of Access Cycles ICLK ≥ PCLK	Number of Access Cycles ICLK < PCLK
0008 C04Ch	PORTC	Port input data register	PIDR	8	8	3 or 4 PCLKB cycles when reading, 2 or 3 PCLKB cycles when writing	3 ICLK cycles when reading, 2 ICLK cycles when writing
0008 C04Dh	PORTD	Port input data register	PIDR	8	8	3 or 4 PCLKB cycles when reading, 2 or 3 PCLKB cycles when writing	3 ICLK cycles when reading, 2 ICLK cycles when writing
0008 C04Eh	PORTE	Port input data register	PIDR	8	8	3 or 4 PCLKB cycles when reading, 2 or 3 PCLKB cycles when writing	3 ICLK cycles when reading, 2 ICLK cycles when writing
0008 C04Fh	PORTF	Port input data register	PIDR	8	8	3 or 4 PCLKB cycles when reading, 2 or 3 PCLKB cycles when writing	3 ICLK cycles when reading, 2 ICLK cycles when writing
0008 C051h	PORTH	Port input data register	PIDR	8	8	3 or 4 PCLKB cycles when reading, 2 or 3 PCLKB cycles when writing	3 ICLK cycles when reading, 2 ICLK cycles when writing
0008 C052h	PORTJ	Port input data register	PIDR	8	8	3 or 4 PCLKB cycles when reading, 2 or 3 PCLKB cycles when writing	3 ICLK cycles when reading, 2 ICLK cycles when writing
0008 C053h	PORTK	Port input data register	PIDR	8	8	2, 3 PCLKB	2 ICLK
0008 C054h	PORTL	Port input data register	PIDR	8	8	2, 3 PCLKB	2 ICLK
0008 C060h	PORT0	Port mode register	PMR	8	8	2, 3 PCLKB	2 ICLK
0008 C061h	PORT1	Port mode register	PMR	8	8	2, 3 PCLKB	2 ICLK
0008 C062h	PORT2	Port mode register	PMR	8	8	2, 3 PCLKB	2 ICLK
0008 C063h	PORT3	Port mode register	PMR	8	8	2, 3 PCLKB	2 ICLK
0008 C064h	PORT4	Port mode register	PMR	8	8	2, 3 PCLKB	2 ICLK
0008 C065h	PORT5	Port mode register	PMR	8	8	2, 3 PCLKB	2 ICLK
0008 C066h	PORT6	Port mode register	PMR	8	8	2, 3 PCLKB	2 ICLK
0008 C067h	PORT7	Port mode register	PMR	8	8	2, 3 PCLKB	2 ICLK
0008 C068h	PORT8	Port mode register	PMR	8	8	2, 3 PCLKB	2 ICLK
0008 C069h	PORT9	Port mode register	PMR	8	8	2, 3 PCLKB	2 ICLK
0008 C06Ah	PORTA	Port mode register	PMR	8	8	2, 3 PCLKB	2 ICLK
0008 C06Bh	PORTB	Port mode register	PMR	8	8	2, 3 PCLKB	2 ICLK
0008 C06Ch	PORTC	Port mode register	PMR	8	8	2, 3 PCLKB	2 ICLK
0008 C06Dh	PORTD	Port mode register	PMR	8	8	2, 3 PCLKB	2 ICLK
0008 C06Eh	PORTE	Port mode register	PMR	8	8	2, 3 PCLKB	2 ICLK
0008 C06Fh	PORTF	Port mode register	PMR	8	8	2, 3 PCLKB	2 ICLK
0008 C071h	PORTH	Port mode register	PMR	8	8	2, 3 PCLKB	2 ICLK
0008 C072h	PORTJ	Port mode register	PMR	8	8	2, 3 PCLKB	2 ICLK
0008 C073h	PORTK	Port mode register	PMR	8	8	2, 3 PCLKB	2 ICLK
0008 C074h	PORTL	Port mode register	PMR	8	8	2, 3 PCLKB	2 ICLK

Table 4.1 List of I/O Registers (Address Order) (25 / 29)

Address	Module Symbol	Register Name	Register Symbol	Number of Bits	Access Size	Number of Access Cycles ICLK ≥ PCLK	Number of Access Cycles ICLK < PCLK
0008 C080	PORT0	Open drain control register 0	ODR0	8	8, 16	2, 3 PCLKB	2 ICLK
0008 C082h	PORT1	Open drain control register 0	ODR0	8	8, 16	2, 3 PCLKB	2 ICLK
0008 C083h	PORT1	Open drain control register 1	ODR1	8	8, 16	2, 3 PCLKB	2 ICLK
0008 C084h	PORT2	Open drain control register 0	ODR0	8	8, 16	2, 3 PCLKB	2 ICLK
0008 C085h	PORT2	Open drain control register 1	ODR1	8	8, 16	2, 3 PCLKB	2 ICLK
0008 C086h	PORT3	Open drain control register 0	ODR0	8	8, 16	2, 3 PCLKB	2 ICLK
0008 C087h	PORT3	Open drain control register 1	ODR1	8	8, 16	2, 3 PCLKB	2 ICLK
0008 C08Ch	PORT6	Open drain control register 0	ODR0	8	8, 16	2, 3 PCLKB	2 ICLK
0008 C08Eh	PORT7	Open drain control register 0	ODR0	8	8, 16	2, 3 PCLKB	2 ICLK
0008 C08Fh	PORT7	Open drain control register 1	ODR1	8	8, 16	2, 3 PCLKB	2 ICLK
0008 C090h	PORT8	Open drain control register 0	ODR0	8	8, 16	2, 3 PCLKB	2 ICLK
0008 C092h	PORT9	Open drain control register 0	ODR0	8	8, 16	2, 3 PCLKB	2 ICLK
0008 C094h	PORTA	Open drain control register 0	ODR0	8	8, 16	2, 3 PCLKB	2 ICLK
0008 C095h	PORTA	Open drain control register 1	ODR1	8	8, 16	2, 3 PCLKB	2 ICLK
0008 C096h	PORTB	Open drain control register 0	ODR0	8	8, 16	2, 3 PCLKB	2 ICLK
0008 C097h	PORTB	Open drain control register 1	ODR1	8	8, 16	2, 3 PCLKB	2 ICLK
0008 C098h	PORTC	Open drain control register 0	ODR0	8	8, 16	2, 3 PCLKB	2 ICLK
0008 C099h	PORTC	Open drain control register 1	ODR1	8	8, 16	2, 3 PCLKB	2 ICLK
0008 C09Ch	PORTE	Open drain control register 0	ODR0	8	8, 16	2, 3 PCLKB	2 ICLK
0008 C09Dh	PORTE	Open drain control register 1	ODR1	8	8, 16	2, 3 PCLKB	2 ICLK
0008 C0A6h	PORTK	Open drain control register 0	ODR0	8	8, 16	2, 3 PCLKB	2 ICLK
0008 C0A7h	PORTK	Open drain control register 1	ODR1	8	8, 16	2, 3 PCLKB	2 ICLK
0008 C0C0h	PORT0	Pull-up control register	PCR	8	8	2, 3 PCLKB	2 ICLK
0008 C0C1h	PORT1	Pull-up control register	PCR	8	8	2, 3 PCLKB	2 ICLK
0008 C0C2h	PORT2	Pull-up control register	PCR	8	8	2, 3 PCLKB	2 ICLK
0008 C0C3h	PORT3	Pull-up control register	PCR	8	8	2, 3 PCLKB	2 ICLK
0008 C0C4h	PORT4	Pull-up control register	PCR	8	8	2, 3 PCLKB	2 ICLK
0008 C0C5h	PORT5	Pull-up control register	PCR	8	8	2, 3 PCLKB	2 ICLK
0008 C0C6h	PORT6	Pull-up control register	PCR	8	8	2, 3 PCLKB	2 ICLK
0008 C0C7h	PORT7	Pull-up control register	PCR	8	8	2, 3 PCLKB	2 ICLK
0008 C0C8h	PORT8	Pull-up control register	PCR	8	8	2, 3 PCLKB	2 ICLK
0008 C0C9h	PORT9	Pull-up control register	PCR	8	8	2, 3 PCLKB	2 ICLK
0008 C0CAh	PORTA	Pull-up control register	PCR	8	8	2, 3 PCLKB	2 ICLK
0008 C0CBh	PORTB	Pull-up control register	PCR	8	8	2, 3 PCLKB	2 ICLK
0008 C0CCh	PORTC	Pull-up control register	PCR	8	8	2, 3 PCLKB	2 ICLK
0008 C0CDh	PORTD	Pull-up control register	PCR	8	8	2, 3 PCLKB	2 ICLK
0008 C0CEh	PORTE	Pull-up control register	PCR	8	8	2, 3 PCLKB	2 ICLK
0008 C0CFh	PORTF	Pull-up control register	PCR	8	8	2, 3 PCLKB	2 ICLK
0008 C0D1h	PORTH	Pull-up control register	PCR	8	8	2, 3 PCLKB	2 ICLK
0008 C0D2h	PORTJ	Pull-up control register	PCR	8	8	2, 3 PCLKB	2 ICLK
0008 C0D3h	PORTK	Pull-up control register	PCR	8	8	2, 3 PCLKB	2 ICLK
0008 C0D4h	PORTL	Pull-up control register	PCR	8	8	2, 3 PCLKB	2 ICLK
0008 C0E0h	PORT0	Drive capacity control register	DSCR	8	8	2, 3 PCLKB	2 ICLK
0008 C0E1h	PORT1	Drive capacity control register	DSCR	8	8	2, 3 PCLKB	2 ICLK
0008 C0E2h	PORT2	Drive capacity control register	DSCR	8	8	2, 3 PCLKB	2 ICLK
0008 C0E3h	PORT3	Drive capacity control register	DSCR	8	8	2, 3 PCLKB	2 ICLK
0008 C0E5h	PORT5	Drive capacity control register	DSCR	8	8	2, 3 PCLKB	2 ICLK
0008 C0E6h	PORT6	Drive capacity control register	DSCR	8	8	2, 3 PCLKB	2 ICLK
0008 C0E7h	PORT7	Drive capacity control register	DSCR	8	8	2, 3 PCLKB	2 ICLK
0008 C0E8h	PORT8	Drive capacity control register	DSCR	8	8	2, 3 PCLKB	2 ICLK
0008 C0E9h	PORT9	Drive capacity control register	DSCR	8	8	2, 3 PCLKB	2 ICLK

Table 4.1 List of I/O Registers (Address Order) (26 / 29)

Address	Module Symbol	Register Name	Register Symbol	Number of Bits	Access Size	Number of Access Cycles ICLK ≥ PCLK	Number of Access Cycles ICLK < PCLK
0008 C0EAh	PORTA	Drive capacity control register	DSCR	8	8	2, 3 PCLKB	2 ICLK
0008 C0EBh	PORTB	Drive capacity control register	DSCR	8	8	2, 3 PCLKB	2 ICLK
0008 C0ECh	PORTC	Drive capacity control register	DSCR	8	8	2, 3 PCLKB	2 ICLK
0008 C0EDh	PORTD	Drive capacity control register	DSCR	8	8	2, 3 PCLKB	2 ICLK
0008 C0EEh	PORTE	Drive capacity control register	DSCR	8	8	2, 3 PCLKB	2 ICLK
0008 C0F1h	PORTH	Drive capacity control register	DSCR	8	8	2, 3 PCLKB	2 ICLK
0008 C0F2h	PORTJ	Drive capacity control register	DSCR	8	8	2, 3 PCLKB	2 ICLK
0008 C0F3h	PORTK	Drive capacity control register	DSCR	8	8	2, 3 PCLKB	2 ICLK
0008 C100h	MPC	CS output enable register	PFCSE	8	8	2, 3 PCLKB	2 ICLK
0008 C104h	MPC	Address output enable register 0	PFAOE0	8	8, 16	2, 3 PCLKB	2 ICLK
0008 C105h	MPC	Address output enable register 1	PFAOE1	8	8, 16	2, 3 PCLKB	2 ICLK
0008 C106h	MPC	External bus control register 0	PFBCR0	8	8, 16	2, 3 PCLKB	2 ICLK
0008 C107h	MPC	External bus control register 1	PFBCR1	8	8, 16	2, 3 PCLKB	2 ICLK
0008 C11Fh	MPC	Write-protect register	PWPR	8	8	2, 3 PCLKB	2 ICLK
0008 C140h	MPC	P00 pin function control register	P00PFS	8	8	2, 3 PCLKB	2 ICLK
0008 C141h	MPC	P01 pin function control register	P01PFS	8	8	2, 3 PCLKB	2 ICLK
0008 C142h	MPC	P02 pin function control register	P02PFS	8	8	2, 3 PCLKB	2 ICLK
0008 C143h	MPC	P03 pin function control register	P03PFS	8	8	2, 3 PCLKB	2 ICLK
0008 C145h	MPC	P05 pin function control register	P05PFS	8	8	2, 3 PCLKB	2 ICLK
0008 C147h	MPC	P07 pin function control register	P07PFS	8	8	2, 3 PCLKB	2 ICLK
0008 C14Ah	MPC	P12 pin function control register	P12PFS	8	8	2, 3 PCLKB	2 ICLK
0008 C14Bh	MPC	P13 pin function control register	P13PFS	8	8	2, 3 PCLKB	2 ICLK
0008 C14Ch	MPC	P14 pin function control register	P14PFS	8	8	2, 3 PCLKB	2 ICLK
0008 C14Dh	MPC	P15 pin function control register	P15PFS	8	8	2, 3 PCLKB	2 ICLK
0008 C14Eh	MPC	P16 pin function control register	P16PFS	8	8	2, 3 PCLKB	2 ICLK
0008 C14Fh	MPC	P17 pin function control register	P17PFS	8	8	2, 3 PCLKB	2 ICLK
0008 C150h	MPC	P20 pin function control register	P20PFS	8	8	2, 3 PCLKB	2 ICLK
0008 C151h	MPC	P21 pin function control register	P21PFS	8	8	2, 3 PCLKB	2 ICLK
0008 C152h	MPC	P22 pin function control register	P22PFS	8	8	2, 3 PCLKB	2 ICLK
0008 C153h	MPC	P23 pin function control register	P23PFS	8	8	2, 3 PCLKB	2 ICLK
0008 C154h	MPC	P24 pin function control register	P24PFS	8	8	2, 3 PCLKB	2 ICLK
0008 C155h	MPC	P25 pin function control register	P25PFS	8	8	2, 3 PCLKB	2 ICLK
0008 C156h	MPC	P26 pin function control register	P26PFS	8	8	2, 3 PCLKB	2 ICLK
0008 C157h	MPC	P27 pin function control register	P27PFS	8	8	2, 3 PCLKB	2 ICLK
0008 C158h	MPC	P30 pin function control register	P30PFS	8	8	2, 3 PCLKB	2 ICLK
0008 C159h	MPC	P31 pin function control register	P31PFS	8	8	2, 3 PCLKB	2 ICLK
0008 C15Ah	MPC	P32 pin function control register	P32PFS	8	8	2, 3 PCLKB	2 ICLK
0008 C15Bh	MPC	P33 pin function control register	P33PFS	8	8	2, 3 PCLKB	2 ICLK
0008 C15Ch	MPC	P34 pin function control register	P34PFS	8	8	2, 3 PCLKB	2 ICLK
0008 C160h	MPC	P40 pin function control register	P40PFS	8	8	2, 3 PCLKB	2 ICLK
0008 C161h	MPC	P41 pin function control register	P41PFS	8	8	2, 3 PCLKB	2 ICLK
0008 C162h	MPC	P42 pin function control register	P42PFS	8	8	2, 3 PCLKB	2 ICLK
0008 C163h	MPC	P43 pin function control register	P43PFS	8	8	2, 3 PCLKB	2 ICLK
0008 C164h	MPC	P44 pin function control register	P44PFS	8	8	2, 3 PCLKB	2 ICLK
0008 C165h	MPC	P45 pin function control register	P45PFS	8	8	2, 3 PCLKB	2 ICLK
0008 C166h	MPC	P46 pin function control register	P46PFS	8	8	2, 3 PCLKB	2 ICLK
0008 C167h	MPC	P47 pin function control register	P47PFS	8	8	2, 3 PCLKB	2 ICLK
0008 C168h	MPC	P50 pin function control register	P50PFS	8	8	2, 3 PCLKB	2 ICLK
0008 C169h	MPC	P51 pin function control register	P51PFS	8	8	2, 3 PCLKB	2 ICLK
0008 C16Ah	MPC	P52 pin function control register	P52PFS	8	8	2, 3 PCLKB	2 ICLK
0008 C16Ch	MPC	P54 pin function control register	P54PFS	8	8	2, 3 PCLKB	2 ICLK

Table 4.1 List of I/O Registers (Address Order) (27 / 29)

Address	Module Symbol	Register Name	Register Symbol	Number of Bits	Access Size	Number of Access Cycles ICLK ≥ PCLK	Number of Access Cycles ICLK < PCLK
0008 C16Dh	MPC	P55 pin function control register	P55PFS	8	8	2, 3 PCLKB	2 ICLK
0008 C16Eh	MPC	P56 pin function control register	P56PFS	8	8	2, 3 PCLKB	2 ICLK
0008 C170h	MPC	P60 pin function control register	P60PFS	8	8	2, 3 PCLKB	2 ICLK
0008 C171h	MPC	P61 pin function control register	P61PFS	8	8	2, 3 PCLKB	2 ICLK
0008 C178h	MPC	P70 pin function control register	P70PFS	8	8	2, 3 PCLKB	2 ICLK
0008 C17Ch	MPC	P74 pin function control register	P74PFS	8	8	2, 3 PCLKB	2 ICLK
0008 C17Dh	MPC	P75 pin function control register	P75PFS	8	8	2, 3 PCLKB	2 ICLK
0008 C17Eh	MPC	P76 pin function control register	P76PFS	8	8	2, 3 PCLKB	2 ICLK
0008 C17Fh	MPC	P77 pin function control register	P77PFS	8	8	2, 3 PCLKB	2 ICLK
0008 C180h	MPC	P80 pin function control register	P80PFS	8	8	2, 3 PCLKB	2 ICLK
0008 C181h	MPC	P81 pin function control register	P81PFS	8	8	2, 3 PCLKB	2 ICLK
0008 C182h	MPC	P82 pin function control register	P82PFS	8	8	2, 3 PCLKB	2 ICLK
0008 C183h	MPC	P83 pin function control register	P83PFS	8	8	2, 3 PCLKB	2 ICLK
0008 C186h	MPC	P86 pin function control register	P865PFS	8	8	2, 3 PCLKB	2 ICLK
0008 C187h	MPC	P87 pin function control register	P87PFS	8	8	2, 3 PCLKB	2 ICLK
0008 C188h	MPC	P90 pin function control register	P90PFS	8	8	2, 3 PCLKB	2 ICLK
0008 C189h	MPC	P91 pin function control register	P91PFS	8	8	2, 3 PCLKB	2 ICLK
0008 C18Ah	MPC	P92 pin function control register	P92PFS	8	8	2, 3 PCLKB	2 ICLK
0008 C18Bh	MPC	P93 pin function control register	P93PFS	8	8	2, 3 PCLKB	2 ICLK
0008 C190h	MPC	PA0 pin function control register	PA0PFS	8	8	2, 3 PCLKB	2 ICLK
0008 C191h	MPC	PA1 pin function control register	PA1PFS	8	8	2, 3 PCLKB	2 ICLK
0008 C192h	MPC	PA2 pin function control register	PA2PFS	8	8	2, 3 PCLKB	2 ICLK
0008 C193h	MPC	PA3 pin function control register	PA3PFS	8	8	2, 3 PCLKB	2 ICLK
0008 C194h	MPC	PA4 pin function control register	PA4PFS	8	8	2, 3 PCLKB	2 ICLK
0008 C195h	MPC	PA5 pin function control register	PA5PFS	8	8	2, 3 PCLKB	2 ICLK
0008 C196h	MPC	PA6 pin function control register	PA6PFS	8	8	2, 3 PCLKB	2 ICLK
0008 C197h	MPC	PA7 pin function control register	PA7PFS	8	8	2, 3 PCLKB	2 ICLK
0008 C198h	MPC	PB0 pin function control register	PB0PFS	8	8	2, 3 PCLKB	2 ICLK
0008 C199h	MPC	PB1 pin function control register	PB1PFS	8	8	2, 3 PCLKB	2 ICLK
0008 C19Ah	MPC	PB2 pin function control register	PB2PFS	8	8	2, 3 PCLKB	2 ICLK
0008 C19Bh	MPC	PB3 pin function control register	PB3PFS	8	8	2, 3 PCLKB	2 ICLK
0008 C19Ch	MPC	PB4 pin function control register	PB4PFS	8	8	2, 3 PCLKB	2 ICLK
0008 C19Dh	MPC	PB5 pin function control register	PB5PFS	8	8	2, 3 PCLKB	2 ICLK
0008 C19Eh	MPC	PB6 pin function control register	PB6PFS	8	8	2, 3 PCLKB	2 ICLK
0008 C19Fh	MPC	PB7 pin function control register	PB7PFS	8	8	2, 3 PCLKB	2 ICLK
0008 C1A0h	MPC	PC0 pin function control register	PC0PFS	8	8	2, 3 PCLKB	2 ICLK
0008 C1A1h	MPC	PC1 pin function control register	PC1PFS	8	8	2, 3 PCLKB	2 ICLK
0008 C1A2h	MPC	PC2 pin function control register	PC2PFS	8	8	2, 3 PCLKB	2 ICLK
0008 C1A3h	MPC	PC3 pin function control register	PC3PFS	8	8	2, 3 PCLKB	2 ICLK
0008 C1A4h	MPC	PC4 pin function control register	PC4PFS	8	8	2, 3 PCLKB	2 ICLK
0008 C1A5h	MPC	PC5 pin function control register	PC5PFS	8	8	2, 3 PCLKB	2 ICLK
0008 C1A6h	MPC	PC6 pin function control register	PC6PFS	8	8	2, 3 PCLKB	2 ICLK
0008 C1A7h	MPC	PC7 pin function control register	PC7PFS	8	8	2, 3 PCLKB	2 ICLK
0008 C1A8h	MPC	PD0 pin function control register	PD0PFS	8	8	2, 3 PCLKB	2 ICLK
0008 C1A9h	MPC	PD1 pin function control register	PD1PFS	8	8	2, 3 PCLKB	2 ICLK
0008 C1AAh	MPC	PD2 pin function control register	PD2PFS	8	8	2, 3 PCLKB	2 ICLK
0008 C1ABh	MPC	PD3 pin function control register	PD3PFS	8	8	2, 3 PCLKB	2 ICLK
0008 C1ACh	MPC	PD4 pin function control register	PD4PFS	8	8	2, 3 PCLKB	2 ICLK
0008 C1ADh	MPC	PD5 pin function control register	PD5PFS	8	8	2, 3 PCLKB	2 ICLK
0008 C1AEh	MPC	PD6 pin function control register	PD6PFS	8	8	2, 3 PCLKB	2 ICLK
0008 C1AFh	MPC	PD7 pin function control register	PD7PFS	8	8	2, 3 PCLKB	2 ICLK

Table 4.1 List of I/O Registers (Address Order) (28 / 29)

Address	Module Symbol	Register Name	Register Symbol	Number of Bits	Access Size	Number of Access Cycles ICLK ≥ PCLK	Number of Access Cycles ICLK < PCLK
0008 C1B0h	MPC	PE0 pin function control register	PE0PFS	8	8	2, 3 PCLKB	2 ICLK
0008 C1B1h	MPC	PE1 pin function control register	PE1PFS	8	8	2, 3 PCLKB	2 ICLK
0008 C1B2h	MPC	PE2 pin function control register	PE2PFS	8	8	2, 3 PCLKB	2 ICLK
0008 C1B3h	MPC	PE3 pin function control register	PE3PFS	8	8	2, 3 PCLKB	2 ICLK
0008 C1B4h	MPC	PE4 pin function control register	PE4PFS	8	8	2, 3 PCLKB	2 ICLK
0008 C1B5h	MPC	PE5 pin function control register	PE5PFS	8	8	2, 3 PCLKB	2 ICLK
0008 C1B6h	MPC	PE6 pin function control register	PE6PFS	8	8	2, 3 PCLKB	2 ICLK
0008 C1B7h	MPC	PE7 pin function control register	PE7PFS	8	8	2, 3 PCLKB	2 ICLK
0008 C1BDh	MPC	PF5 pin function control register	PF5PFS	8	8	2, 3 PCLKB	2 ICLK
0008 C1C8h	MPC	PH0 pin function control register	PH0PFS	8	8	2, 3 PCLKB	2 ICLK
0008 C1C9h	MPC	PH1 pin function control register	PH1PFS	8	8	2, 3 PCLKB	2 ICLK
0008 C1CAh	MPC	PH2 pin function control register	PH2PFS	8	8	2, 3 PCLKB	2 ICLK
0008 C1CBh	MPC	PH3 pin function control register	PH3PFS	8	8	2, 3 PCLKB	2 ICLK
0008 C1D1h	MPC	PJ1 pin function control register	PJ1PFS	8	8	2, 3 PCLKB	2 ICLK
0008 C1D3h	MPC	PJ3 pin function control register	PJ3PFS	8	8	2, 3 PCLKB	2 ICLK
0008 C1DAh	MPC	PK2 pin function control register	PK2PFS	8	8	2, 3 PCLKB	2 ICLK
0008 C1DBh	MPC	PK3 pin function control register	PK3PFS	8	8	2, 3 PCLKB	2 ICLK
0008 C1DCh	MPC	PK4 pin function control register	PK4PFS	8	8	2, 3 PCLKB	2 ICLK
0008 C1DDh	MPC	PK5 pin function control register	PK5PFS	8	8	2, 3 PCLKB	2 ICLK
0008 C280h	SYSTEM	Deep standby control register	DPSBYCR	8	8	4, 5 PCLKB	2, 3 ICLK
0008 C282h	SYSTEM	Deep standby interrupt enable register 0	DPSIER0	8	8	4, 5 PCLKB	2, 3 ICLK
0008 C284h	SYSTEM	Deep standby interrupt enable register 2	DPSIER2	8	8	4, 5 PCLKB	2, 3 ICLK
0008 C286h	SYSTEM	Deep standby interrupt flag register 0	DPSIFR0	8	8	4, 5 PCLKB	2, 3 ICLK
0008 C288h	SYSTEM	Deep standby interrupt flag register 2	DPSIFR2	8	8	4, 5 PCLKB	2, 3 ICLK
0008 C28Ah	SYSTEM	Deep standby interrupt edge register 0	DPSIEGR0	8	8	4, 5 PCLKB	2, 3 ICLK
0008 C28Ch	SYSTEM	Deep standby interrupt edge register 2	DPSIEGR2	8	8	4, 5 PCLKB	2, 3 ICLK
0008 C28Fh	SYSTEM	Flash HOCO software standby control register	FHSSBYCR	8	8	4, 5 PCLKB	2, 3 ICLK
0008 C290h	SYSTEM	Reset status register 0	RSTSR0	8	8	4, 5 PCLKB	2, 3 ICLK
0008 C291h	SYSTEM	Reset status register 1	RSTSR1	8	8	4, 5 PCLKB	2, 3 ICLK
0008 C293h	SYSTEM	Main clock oscillator forced oscillation control register	MOFCR	8	8	4, 5 PCLKB	2, 3 ICLK
0008 C294h	SYSTEM	High-speed clock oscillator power supply control register	HOCOPCR	8	8	4, 5 PCLKB	2, 3 ICLK
0008 C295h	SYSTEM	PLL power control register	PLLPCR	8	8	4, 5 PCLKB	2, 3 ICLK
0008 C296h	FLASH	Flash write erase protection register	FWEPROR	8	8	4, 5 PCLKB	2, 3 ICLK
0008 C297h	SYSTEM	Voltage monitoring circuit/comparator A control register	LVCMPCR	8	8	4, 5 PCLKB	2, 3 ICLK
0008 C298h	SYSTEM	Voltage detection level select register	LVDLVLR	8	8	4, 5 PCLKB	2, 3 ICLK
0008 C29Ah	SYSTEM	Voltage monitoring 1 circuit/comparator A1 control register 0	LVD1CR0	8	8	4, 5 PCLKB	2, 3 ICLK
0008 C29Bh	SYSTEM	Voltage monitoring 2 circuit/comparator A2 control register 0	LVD2CR0	8	8	4, 5 PCLKB	2, 3 ICLK
0008 C2A0h to 0008 C2BFh	SYSTEM	Deep standby backup register 0 to 31	DPSBKR0 to DPSBKR31	8	8	4, 5 PCLKB	2, 3 ICLK
0008 C400h	RTC	64-Hz counter	R64CNT	8	8	2, 3 PCLKB	2 ICLK
0008 C402h	RTC	Second counter	RSECCNT	8	8	2, 3 PCLKB	2 ICLK
0008 C404h	RTC	Minute counter	RMINCNT	8	8	2, 3 PCLKB	2 ICLK
0008 C406h	RTC	Hour counter	RHRCNT	8	8	2, 3 PCLKB	2 ICLK
0008 C408h	RTC	Day-of-week counter	RWKCNT	8	8	2, 3 PCLKB	2 ICLK
0008 C40Ah	RTC	Date counter	RDAYCNT	8	8	2, 3 PCLKB	2 ICLK
0008 C40Ch	RTC	Month counter	RMONCNT	8	8	2, 3 PCLKB	2 ICLK
0008 C40Eh	RTC	Year counter	RYRCNT	16	16	2, 3 PCLKB	2 ICLK
0008 C410h	RTC	Second alarm register	RSECAR	8	8	2, 3 PCLKB	2 ICLK
0008 C412h	RTC	Minute alarm register	RMINAR	8	8	2, 3 PCLKB	2 ICLK
0008 C414h	RTC	Hour alarm register	RHRAR	8	8	2, 3 PCLKB	2 ICLK
0008 C416h	RTC	Day-of-week alarm register	RWKAR	8	8	2, 3 PCLKB	2 ICLK
0008 C418h	RTC	Date alarm register	RDAYAR	8	8	2, 3 PCLKB	2 ICLK

Table 4.1 List of I/O Registers (Address Order) (29 / 29)

Address	Module Symbol	Register Name	Register Symbol	Number of Bits	Access Size	Number of Access Cycles ICLK ≥ PCLK	Number of Access Cycles ICLK < PCLK
0008 C41Ah	RTC	Month alarm register	RMONAR	8	8	2, 3 PCLKB	2 ICLK
0008 C41Ch	RTC	Year alarm register	RYRAR	16	16	2, 3 PCLKB	2 ICLK
0008 C41Eh	RTC	Year alarm enable register	RYRAREN	8	8	2, 3 PCLKB	2 ICLK
0008 C422h	RTC	RTC control register 1	RCR1	8	8	2, 3 PCLKB	2 ICLK
0008 C424h	RTC	RTC control register 2	RCR2	8	8	2, 3 PCLKB	2 ICLK
0008 C426h	RTC	RTC control register 3	RCR3	8	8	2, 3 PCLKB	2 ICLK
0008 C42Eh	RTC	Time error adjustment register	RADJ	8	8	2, 3 PCLKB	2 ICLK
0008 C440h	RTC	Time capture control register 0	RTCCR0	8	8	2, 3 PCLKB	2 ICLK
0008 C442h	RTC	Time capture control register 1	RTCCR1	8	8	2, 3 PCLKB	2 ICLK
0008 C444h	RTC	Time capture control register 2	RTCCR2	8	8	2, 3 PCLKB	2 ICLK
0008 C452h	RTC	Second capture register 0	RSECCP0	8	8	2, 3 PCLKB	2 ICLK
0008 C454h	RTC	Minute capture register 0	RMINCP0	8	8	2, 3 PCLKB	2 ICLK
0008 C456h	RTC	Hour capture register 0	RHRCP0	8	8	2, 3 PCLKB	2 ICLK
0008 C45Ah	RTC	Date capture register 0/	RDAYCP0	8	8	2, 3 PCLKB	2 ICLK
0008 C45Ch	RTC	Month capture register 0	RMONCP0	8	8	2, 3 PCLKB	2 ICLK
0008 C462h	RTC	Second capture register 1	RSECCP1	8	8	2, 3 PCLKB	2 ICLK
0008 C464h	RTC	Minute capture register 1	RMINCP1	8	8	2, 3 PCLKB	2 ICLK
0008 C466h	RTC	Hour capture register 1	RHRCP1	8	8	2, 3 PCLKB	2 ICLK
0008 C46Ah	RTC	Date capture register 1	RDAYCP1	8	8	2, 3 PCLKB	2 ICLK
0008 C46Ch	RTC	Month capture register 1	RMONCP1	8	8	2, 3 PCLKB	2 ICLK
0008 C472h	RTC	Second capture register 2	RSECCP2	8	8	2, 3 PCLKB	2 ICLK
0008 C474h	RTC	Minute capture register 2	RMINCP2	8	8	2, 3 PCLKB	2 ICLK
0008 C476h	RTC	Hour capture register 2	RHRCP2	8	8	2, 3 PCLKB	2 ICLK
0008 C47Ah	RTC	Date capture register 2	RDAYCP2	8	8	2, 3 PCLKB	2 ICLK
0008 C47Ch	RTC	Month capture register 2	RMONCP2	8	8	2, 3 PCLKB	2 ICLK
0008 C500h	TEMPS	Temperature sensor control register	TSCR	8	8	2, 3 PCLKB	2 ICLK
0008 C580h	CMPB	Comparator B control register 1	CPBCNT1	8	8	2, 3 PCLKB	2 ICLK
0008 C582h	CMPB	Comparator B flag register	CPBFLG	8	8	2, 3 PCLKB	2 ICLK
0008 C583h	CMPB	Comparator B interrupt control register	CPBINT	8	8	2, 3 PCLKB	2 ICLK
0008 C584h	CMPB	Comparator B filter select register	CPBF	8	8	2, 3 PCLKB	2 ICLK
007F C402h	FLASH	Flash mode register	FMODR	8	8	2, 3 FCLK	2 ICLK
007F C410h	FLASH	Flash access status register	FASTAT	8	8	2, 3 FCLK	2 ICLK
007F C411h	FLASH	Flash access error interrupt enable register	FAEINT	8	8	2, 3 FCLK	2 ICLK
007F C412h	FLASH	Flash ready interrupt enable register	FRDYIE	8	8	2, 3 FCLK	2 ICLK
007F C440h	FLASH	E2 DataFlash read enable register 0	DFLRE0	16	16	2, 3 FCLK	2 ICLK
007F C450h	FLASH	E2 DataFlash programming/erasure enable register 0	DFLWE0	16	16	2, 3 FCLK	2 ICLK
007F C454h	FLASH	FCU RAM enable register	FCURAME	16	16	2, 3 FCLK	2 ICLK
007F FFB0h	FLASH	Flash status register 0	FSTATR0	8	8	2, 3 FCLK	2 ICLK
007F FFB1h	FLASH	Flash status register 1	FSTATR1	8	8	2, 3 FCLK	2 ICLK
007F FFB2h	FLASH	Flash P/E mode entry register	FENTRYR	16	16	2, 3 FCLK	2 ICLK
007F FFB4h	FLASH	Flash protection register	FPROTR	16	16	2, 3 FCLK	2 ICLK
007F FFB6h	FLASH	Flash reset register	FRESETR	16	16	2, 3 FCLK	2 ICLK
007F FFBAh	FLASH	FCU command register	FCMDR	16	16	2, 3 FCLK	2 ICLK
007F FFC8h	FLASH	FCU processing switching register	FCPSR	16	16	2, 3 FCLK	2 ICLK
007F FFCAh	FLASH	E2 DataFlash blank check control register	DFLBCCNT	16	16	2, 3 FCLK	2 ICLK
007F FFCCh	FLASH	Flash P/E status register	FPESTAT	16	16	2, 3 FCLK	2 ICLK
007F FFCEh	FLASH	E2 DataFlash blank check status register	DFLBCSTAT	16	16	2, 3 FCLK	2 ICLK
007F FFE8h	FLASH	Peripheral clock notification register	PCKAR	16	16	2, 3 FCLK	2 ICLK

Note 1. Odd addresses cannot be accessed in 16-bit units. When accessing a register in 16-bit units, access the address of the TMR0 or TMR2 register.
Note 2. Odd addresses cannot be accessed in 16-bit units. When accessing a register in 16-bit units, access the address of the TMOCNTL register.

5. Electrical Characteristics

5.1 Absolute Maximum Ratings

Table 5.1 Absolute Maximum Ratings

Conditions: VSS = AVSS0 = VREFL = VREFL0 = 0 V

Item	Symbol	Value	Unit
Power supply voltage	VCC	–0.3 to +6.5	V
Input voltage (except for ports for 5 V tolerant*1)	V_{in}	–0.3 to VCC +0.3*3	V
Input voltage (ports for 5 V tolerant*1)	V_{in}	–0.3 to +6.5	V
Reference power supply voltage	VREFH, VREFH0	–0.3 to VCC +0.3*3	V
Analog power supply voltage	AVCC0*2	–0.3 to +6.5	V
Analog input voltage	V_{AN}	–0.3 to VCC +0.3*3	V
Operating temperature	T_{opr}	–40 to +105	°C
Storage temperature	T_{stg}	–55 to +125	°C

Caution: Permanent damage to the LSI may result if absolute maximum ratings are exceeded.

To preclude any malfunctions due to noise interferences, insert capacitors of high frequency characteristics between the VCC and VSS pins, between the AVCC0 and AVSS0 pins, and between the VREFH0 and VREFL0 pins. Place capacitors of 0.1 µF or so as close to every power pin and use the shortest and heaviest possible traces.

Connect the VCL pin to a VSS pin via a 0.1 µF (±20% accuracy) capacitor. The capacitor must be placed as close to the pin as possible.

Note 1. Ports 12, 13, 16, and 17 are 5 V tolerant.

Note 2. Connect AVCC0 to VCC. When neither the A/D converter nor the D/A converter is in use, do not leave the AVCC0, VREFH, VREFH0, AVSS0, VREFL, and VREFL0 pins open. Connect the AVCC0, VREFH, and VREFH0 pins to VCC, and the AVSS0, VREFL, and VREFL0 pins to VSS, respectively.

Note 3. The maximum value is 6.5 V.

5.2 DC Characteristics

Table 5.2 DC Characteristics (1)

Conditions: VCC = AVCC0 = 2.7 to 5.5 V, VSS = AVSS0 = VREFL = VREFL0 = 0 V, T_a = –40 to +105°C

Item		Symbol	Min.	Typ.	Max.	Unit	Test Conditions
Schmitt trigger input voltage	RIIC input pin (except for SMBus, 5 V tolerant)	V_{IH}	VCC × 0.7	—	5.8	V	
	Ports 12, 13, 16, and 17 (5 V tolerant)		VCC × 0.8	—	5.8		
	Ports 0, 14, 15, 2 to 9, A to L, and RES#		VCC × 0.8	—	VCC + 0.3		
	RIIC input pin (except for SMBus)	V_{IL}	–0.3	—	VCC × 0.3		
	Other than RIIC input pin		–0.3	—	VCC × 0.2		
	RIIC input pin (except for SMBus)	ΔV_T	VCC × 0.05	—	—		
	Other than RIIC input pin		VCC × 0.1	—	—		
Input level voltage (except for Schmitt trigger input pins)	MD pin	V_{IH}	VCC × 0.9	—	VCC + 0.3	V	
	EXTAL, WAIT#		VCC × 0.8	—	VCC + 0.3		
	D0 to D15		VCC × 0.7	—	VCC + 0.3		
	RIIC input pin (SMBus)		2.1	—	VCC + 0.3		
	MD pin	V_{IL}	–0.3	—	VCC × 0.1		
	EXTAL, WAIT#		–0.3	—	VCC × 0.2		
	D0 to D15		–0.3	—	VCC × 0.3		
	RIIC input pin (SMBus)		–0.3	—	0.8		

Table 5.3 DC Characteristics (2)

Conditions: VCC = AVCC0 = 1.62 to 2.7 V, VSS = AVSS0 = VREFL = VREFL0 = 0 V, T_a = –40 to +105°C

Item			Symbol	Min.	Typ.	Max.	Unit	Test Conditions
Schmitt trigger input voltage	Ports 12, 13, 16, and 17 (5 V tolerant)		V_{IH}	VCC × 0.8	—	5.8	V	
	Ports 0, 14, 15, 2 to 9, A to L, and RES#			VCC × 0.8	—	VCC + 0.3		
	All input pins		V_{IL}	–0.3	—	VCC × 0.2		
	Ports 0 to 9, A to L	VCC ≥ 2.2V	ΔV_T	VCC × 0.05	—	—		
		VCC < 2.2V		VCC × 0.01				
	RES#			VCC × 0.1				
Input level voltage (except for Schmitt trigger input pins)	MD pin		V_{IH}	VCC × 0.9	—	VCC + 0.3	V	
	EXTAL, WAIT#			VCC × 0.8	—	VCC + 0.3		
	D0 to D15			VCC × 0.7	—	VCC + 0.3		
	MD pin		V_{IL}	–0.3	—	VCC × 0.1		
	EXTAL, WAIT#			–0.3	—	VCC × 0.2		
	D0 to D15			–0.3	—	VCC × 0.3		

Table 5.4 DC Characteristics (3)

Conditions: VCC = AVCC0 = 1.62 to 5.5 V, VSS = AVSS0 = VREFL = VREFL0 = 0 V, T_a = –40 to +105°C

Item		Symbol	Min.	Typ.	Max.	Unit	Test Conditions
Input leakage current	RES#, MD pin, P35/NMI	$\lvert I_{in} \rvert$	—	—	1.0	μA	V_{in} = 0 V, VCC
Three-state leakage current (off-state)	Port 4	$\lvert I_{TSI} \rvert$	—	—	1.0	μA	V_{in} = 0 V, VCC
	Other pins except for ports for 5 V tolerant and port 4		—	—	0.2		
	Ports for 5 V tolerant		—	—	1.0		V_{in} = 0 V, 5.8 V
Input capacitance	All input pins (except for ports 12, 13, 16, 17, 4, A1, A3, A4, and E)	C_{in}	—	—	15	pF	V_{in} = 0 V, f = 1 MHz, T_a = 25°C
	Ports 12, 13, 16, 17, 4, A1, A3, A4, and E		—	—	30		

Table 5.5 DC Characteristics (4)

Conditions: VCC = AVCC0 = 1.62 to 5.5 V, VSS = AVSS0 = VREFL = VREFL0 = 0 V, T_a = –40 to +105°C

Item		Symbol	VCC						Unit	Test Conditions
			1.62 to 2.7 V		2.7 to 4.0 V		4.0 to 5.5 V			
			Min.	Max.	Min.	Max.	Min.	Max.		
Input pull-up MOS current	All ports (except for port 35)	I_p	–150	–5	–200	–10	–400	–50	μA	V_{in} = 0 V

[Chip version A]

Table 5.6 DC Characteristics (5)

Conditions: VCC = AVCC0 = 2.7 to 5.5 V, VSS = AVSS0 = VREFL = VREFL0 = 0 V, T_a = –40 to +105°C

Item					Symbol	Typ.	Max.	Unit	Test Conditions
Supply current*1	High-speed operating mode	Normal operating mode	No peripheral operation*2	ICLK = 50 MHz	I_{CC}	10	—	mA	
			All peripheral operation: Normal*3	ICLK = 50 MHz		31.5	—		
			All peripheral operation: Max.*3	ICLK = 50 MHz		—	55		
		Sleep mode	No peripheral operation	ICLK = 50 MHz		7.5	—		
			All peripheral operation: Normal	ICLK = 50 MHz		17.5	—		
		All-module clock stop mode		ICLK = 50 MHz		6.7	—		
		Increase during BGO operation*4				25	—		

Note 1. Supply current values do not include output charge/discharge current from all pins. The values apply when internal pull-up MOSs are in the off state.

Note 2. Clock supply to the peripheral functions is stopped. This does not include BGO operation. The clock source is PLL and the VCO oscillation frequency is 100 MHz. BCLK, FCLK, and PCLK are set to divided by 64.

Note 3. Clocks are supplied to the peripheral functions. This does not include BGO operation. The clock source is PLL and the VCO oscillation frequency is 100 MHz. BCLK, FCLK, and PCLK are ICLK divided by 2.

Note 4. This is the increase if data is programmed to or erasing from the ROM or E2 DataFlash during program execution.

[Chip version A]

Table 5.7 DC Characteristics (6)

Conditions: VCC = AVCC0 = 1.62 to 5.5 V, VSS = AVSS0 = VREFL = VREFL0 = 0 V, T_a = –40 to +105°C

Item					Symbol	Typ.	Max.	Unit	Test Conditions
Supply current*1	Middle-speed operating modes 1A and 1B	Normal operating mode	No peripheral operation	ICLK = 32 MHz*2	I_{CC}	7.0	—	mA	
				ICLK = 20 MHz*3		6.0	—		
			All peripheral operation: Normal	ICLK = 32 MHz*4		26	—		
				ICLK = 20 MHz*5		18.5	—		
			All peripheral operation: Max.	ICLK = 32 MHz*4		—	40		
				ICLK = 20 MHz*5		—	30		
		Sleep mode	No peripheral operation	ICLK = 32 MHz		5.0	—		
				ICLK = 20 MHz		4.6	—		
			All peripheral operation: Normal	ICLK = 32 MHz		15.5	—		
				ICLK = 20 MHz		12	—		
		All-module clock stop mode		ICLK = 32 MHz		4.5	—		
				ICLK = 20 MHz		4.3	—		
		Increase during BGO operation*6	Middle-speed operating mode 1A			25	—		
			Middle-speed operating mode 1B			20	—		
	Low-speed operating mode 1	Normal operating mode	No peripheral operation*7	ICLK = 1 MHz		0.68	—		
			All peripheral operation: Normal*8	ICLK = 1 MHz		2.4	—		
			All peripheral operation: Max.*8	ICLK = 1 MHz		—	7		
		Sleep mode	No peripheral operation	ICLK = 1 MHz		0.6	—		
			All peripheral operation: Normal	ICLK = 1 MHz		2	—		
		All-module clock stop mode				0.58	—		
	Low-speed operating mode 2	Normal operating mode	No peripheral operation*9	ICLK = 32 kHz		0.024	—		
			All peripheral operation: Normal*10	ICLK = 32 kHz		0.05	—		
			All peripheral operation: Max.*10	ICLK = 32 kHz		—	3*11		
		Sleep mode	No peripheral operation	ICLK = 32 kHz		0.02	—		
			All peripheral operation: Normal	ICLK = 32 kHz		0.04	—		
		All-module clock stop mode				0.018	—		

Note 1. Supply current values do not include output charge/discharge current from all pins. The values apply when internal pull-up MOSs are in the off state.

Note 2. Clock supply to the peripheral functions is stopped. This does not include BGO operation. The clock source is PLL and the VCO oscillation frequency is 64 MHz. BCLK, FCLK, and PCLK are set to divided by 64.

Note 3. Clock supply to the peripheral functions is stopped. This does not include BGO operation. The clock source is HOCO and the oscillation frequency is 40 MHz. BCLK, FCLK, and PCLK are set to divided by 64.

Note 4. Clocks are supplied to the peripheral functions. This does not include BGO operation. The clock source is PLL and the VCO oscillation frequency is 64 MHz. BCLK, FCLK, and PCLK are ICLK divided by 1.

Note 5. Clocks are supplied to the peripheral functions. This does not include BGO operation. The clock source is HOCO and the oscillation frequency is 40 MHz. BCLK, FCLK, and PCLK are ICLK divided by 1.
Note 6. This is the increase if data is programmed to or erasing from the ROM or E2 DataFlash during program execution.
Note 7. Clock supply to the peripheral functions is stopped. This does not include BGO operation. The clock source is HOCO and the oscillation frequency is 32 MHz. BCLK, FCLK, and PCLK are set to divided by 64.
Note 8. Clocks are supplied to the peripheral functions. This does not include BGO operation. The clock source is HOCO and the oscillation frequency is 32 MHz. BCLK, FCLK, and PCLK are ICLK divided by 1.
Note 9. Clock supply to the peripheral functions is stopped. This does not include BGO operation. The clock source is the sub oscillation circuit. BCLK, FCLK, and PCLK are set to divided by 64.
Note 10. Clocks are supplied to the peripheral functions. This does not include BGO operation. The clock source is the sub oscillation circuit. BCLK, FCLK, and PCLK are ICLK divided by 1.
Note 11. Value when the main clock continues oscillating at 12.5 MHz.

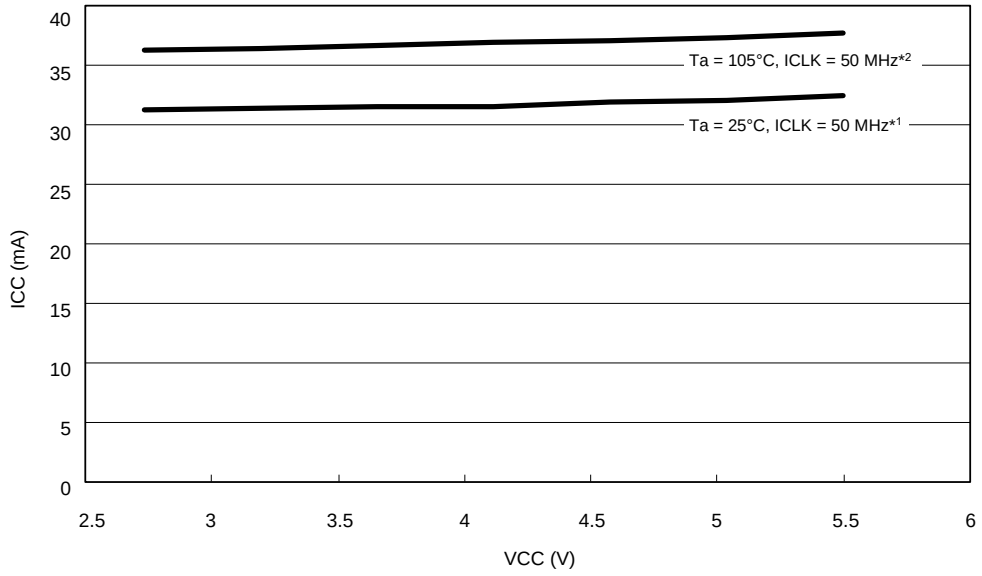

Note 1. All peripheral operation is normal. This does not include BGO operation.
Average value of the tested middle samples during product evaluation.
Note 2. All peripheral operation is maximum. This does not include BGO operation.
Average value of the tested upper-limit samples during product evaluation.

Figure 5.1 Voltage Dependency in High-Speed Operating Mode (Reference Data) for Chip Version A

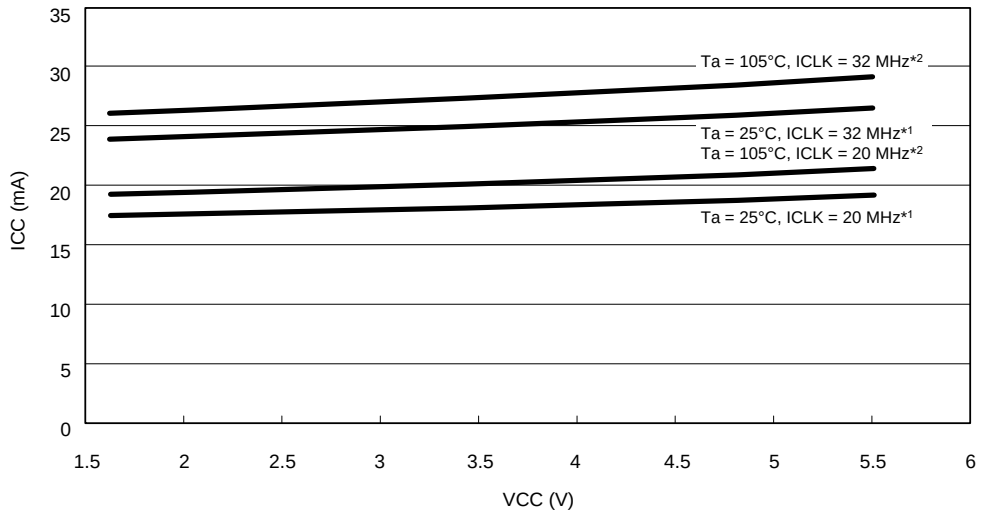

Note 1. All peripheral operation is normal. This does not include BGO operation.
Average value of the tested middle samples during product evaluation.
Note 2. All peripheral operation is maximum. This does not include BGO operation.
Average value of the tested upper-limit samples during product evaluation.

Figure 5.2 Voltage Dependency in Middle-Speed Operating Modes 1A and 1B (Reference Data) for Chip Version A

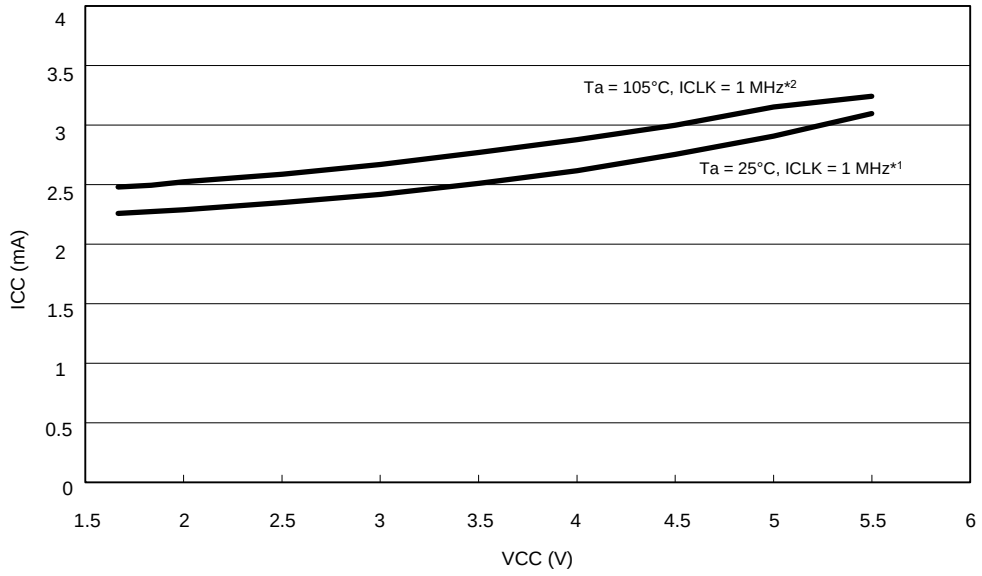

Note 1. All peripheral operation is normal.
Average value of the tested middle samples during product evaluation.
Note 2. All peripheral operation is maximum.
Average value of the tested upper-limit samples during product evaluation.

Figure 5.3 Voltage Dependency in Low-Speed Operating Mode 1 (Reference Data) for Chip Version A

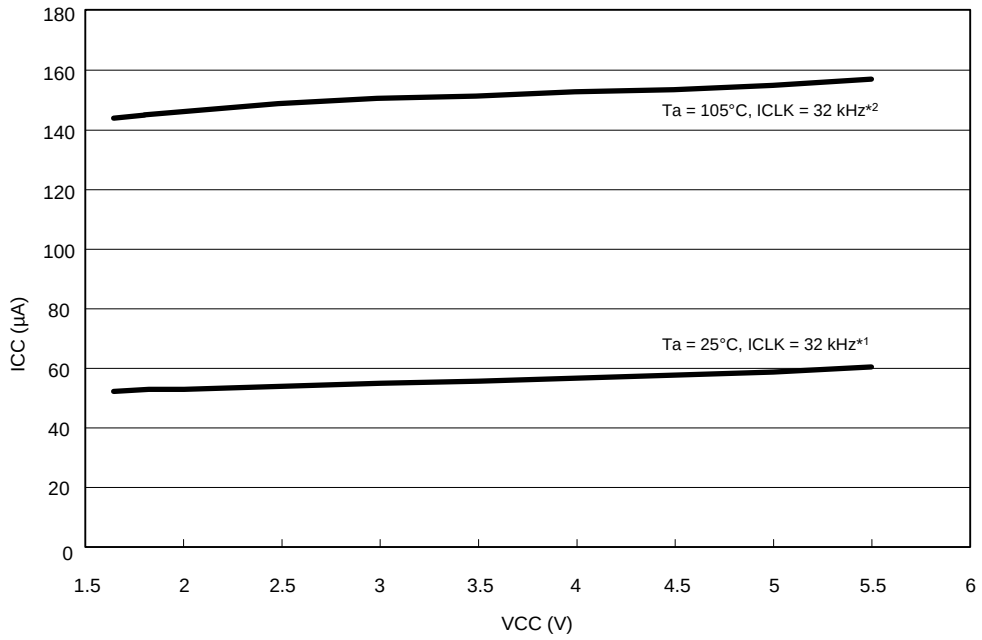

Note 1. All peripheral operation is normal.
Average value of the tested middle samples during product evaluation.
Note 2. All peripheral operation is maximum.
Average value of the tested upper-limit samples during product evaluation.

Figure 5.4 Voltage Dependency in Low-Speed Operating Mode 2 (Reference Data) for Chip Version A

[Chip version A]

Table 5.8 DC Characteristics (7)

Conditions: VCC = AVCC0 = 1.62 to 5.5 V, VSS = AVSS0 = 0 V, T_a = –40 to +105°C

Item				Symbol	Typ.*3	Max.	Unit	Test Conditions
Supply current*1	Software standby mode*2	Flash memory power supplied, HOCO power supplied, POR low power consumption function disabled (SOFTCUT[2:0] bits = 000b)	T_a = 25°C	I_{CC}	175	—	μA	
		Flash memory power supplied, HOCO power not supplied, POR low power consumption function enabled (SOFTCUT[2:0] bits = 110b)	T_a = 25°C		3.0	—		
			T_a = 85°C		—	130		
			T_a = 105°C		—	150		
		Flash memory power not supplied, HOCO power not supplied, POR low power consumption function enabled (SOFTCUT[2:0] bits = 111b)	T_a = 25°C		2.0	—		
			T_a = 85°C		—	120		
			T_a = 105°C		—	140		
	Deep software standby mode*2	Flash memory power not supplied, HOCO power not supplied, POR low power consumption function enabled (DEEPCUT1 bit = 1)	T_a = 25°C		0.45			
			T_a = 85°C		—	20		
			T_a = 105°C		—	25		
	Increments produced by running voltage detection circuits and disabling the POR low power consumption function				1.4	—		
	Increment for RTC operation (low CL)				0.8	—		
	Increment for RTC operation (standard CL)				2.0	—		

Note 1. Supply current values are with all output pins unloaded and all input pull-up MOSs in the off state.
Note 2. The IWDT and LVD are stopped.
Note 3. VCC = 3.3 V.

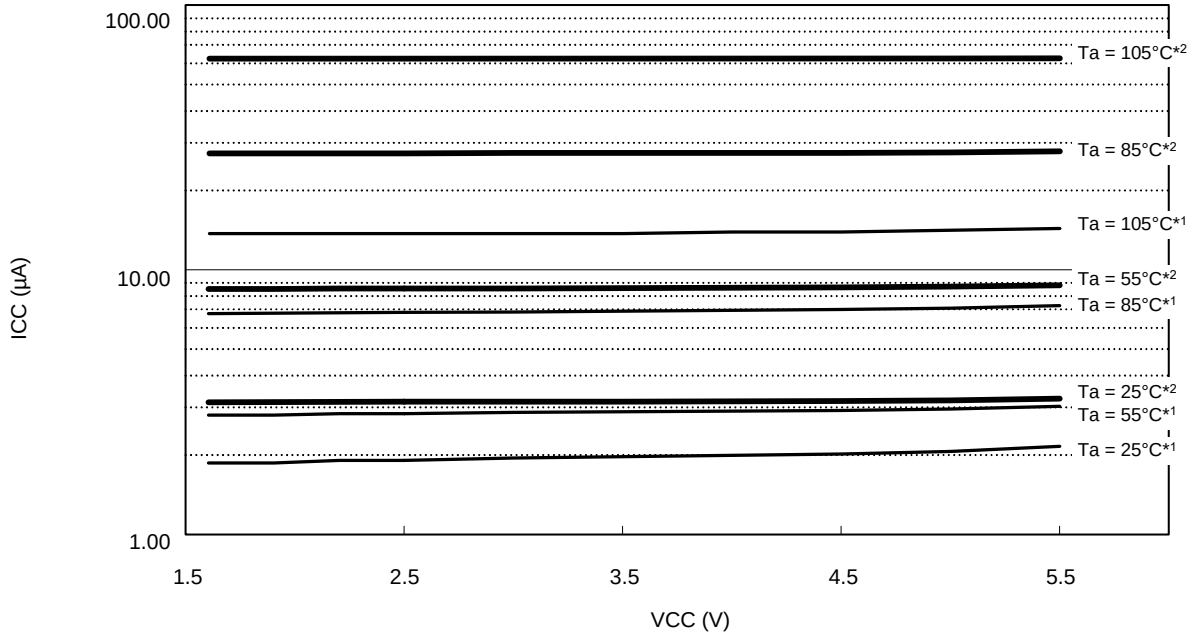

Note 1. Average value of the tested middle samples during product evaluation.
Note 2. Average value of the tested upper-limit samples during product evaluation.

Figure 5.5 Voltage Dependency in Software Standby Mode (SOFTCUT[2:0] Bits = 111b) (Reference Data) for Chip Version A

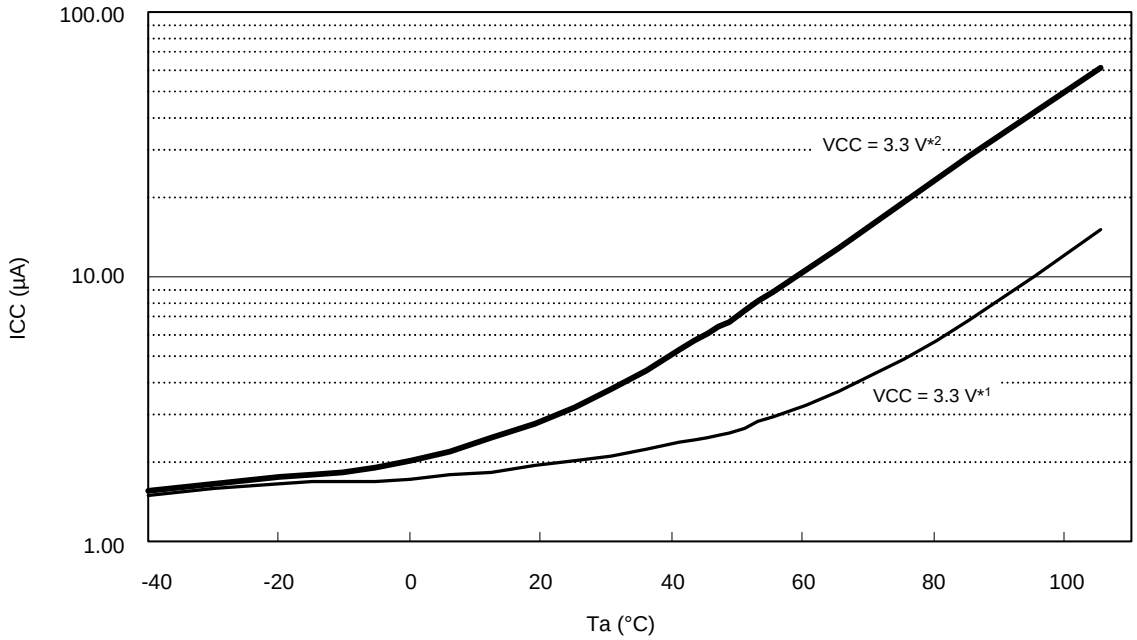

Note 1. Average value of the tested middle samples during product evaluation.
Note 2. Average value of the tested upper-limit samples during product evaluation.

Figure 5.6 Temperature Dependency in Software Standby Mode (SOFTCUT[2:0] Bits = 111b) (Reference Data) for Chip Version A

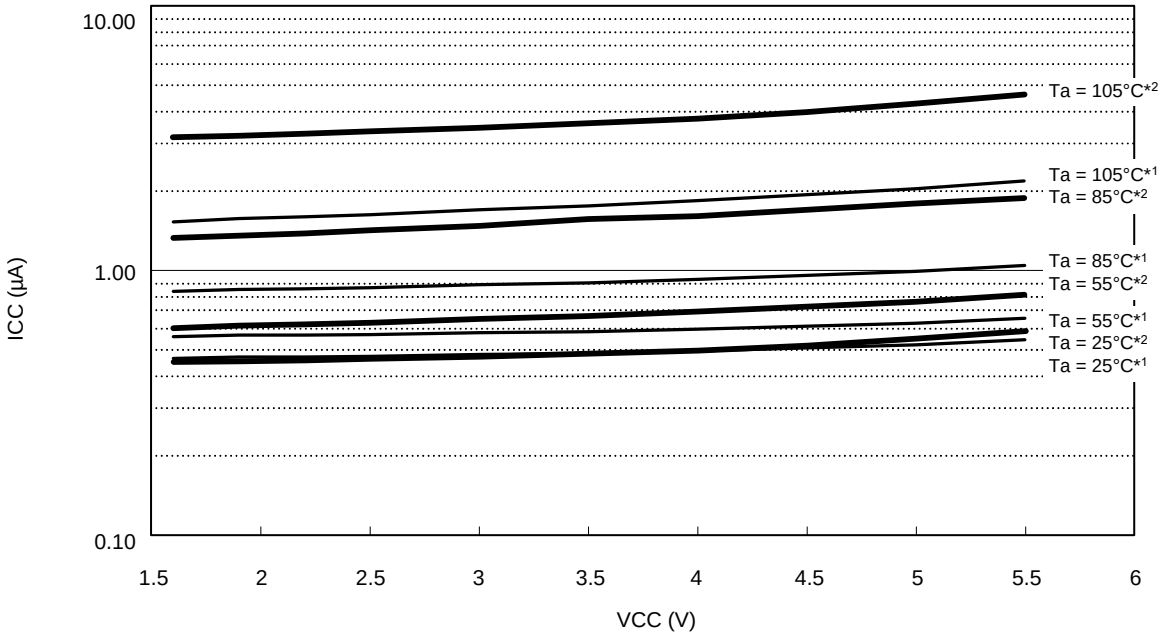

Note 1. Average value of the tested middle samples during product evaluation.
Note 2. Average value of the tested upper-limit samples during product evaluation.

Figure 5.7 Voltage Dependency in Deep Software Standby Mode (DEEPCUT1 Bit = 1) (Reference Data) for Chip Version A

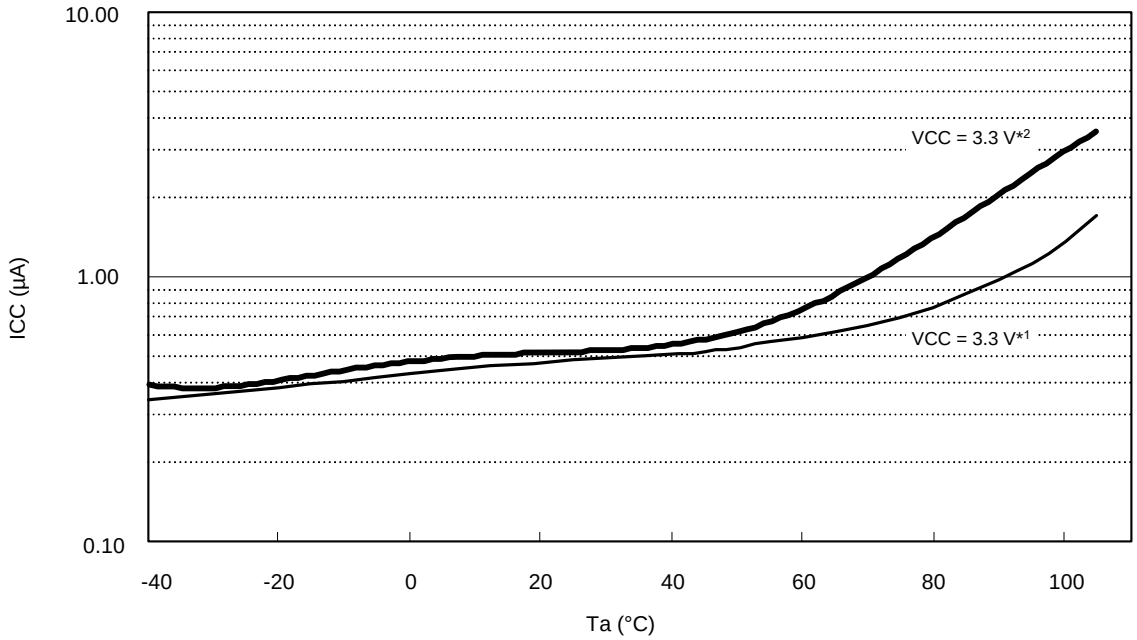

Note 1. Average value of the tested middle samples during product evaluation.
Note 2. Average value of the tested upper-limit samples during product evaluation.

Figure 5.8 Temperature Dependency in Deep Software Standby Mode (DEEPCUT1 Bit = 1) (Reference Data) for Chip Version A

[Chip version C]

Table 5.9 DC Characteristics (8)

Conditions: VCC = AVCC0 = 2.7 to 5.5 V, VSS = AVSS0 = VREFL = VREFL0 = 0 V, T_a = –40 to +105°C

Item					Symbol	Typ.	Max.	Unit	Test Conditions
Supply current*1	High-speed operating mode	Normal operating mode	No peripheral operation*2	ICLK = 50 MHz	I_{CC}	10	—	mA	
			All peripheral operation: Normal*3	ICLK = 50 MHz		31.5	—		
			All peripheral operation: Max.*3	ICLK = 50 MHz		—	55		
		Sleep mode	No peripheral operation	ICLK = 50 MHz		7.5	—		
			All peripheral operation: Normal	ICLK = 50 MHz		17.5	—		
		All-module clock stop mode		ICLK = 50 MHz		6.7	—		
		Increase during BGO operation*4				25	—		

Note 1. Supply current values do not include output charge/discharge current from all pins. The values apply when internal pull-up MOSs are in the off state.

Note 2. Clock supply to the peripheral functions is stopped. This does not include BGO operation. The clock source is PLL and the VCO oscillation frequency is 100 MHz. BCLK, FCLK, and PCLK are set to divided by 64.

Note 3. Clocks are supplied to the peripheral functions. This does not include BGO operation. The clock source is PLL and the VCO oscillation frequency is 100 MHz. BCLK, FCLK, and PCLK are ICLK divided by 2.

Note 4. This is the increase if data is programmed to or erasing from the ROM or E2 DataFlash during program execution.

[Chip version C]

Table 5.10 DC Characteristics (9)

Conditions: VCC = AVCC0 = 1.62 to 5.5 V, VSS = AVSS0 = VREFL = VREFL0 = 0 V, T_a = –40 to +105°C

Item					Symbol	Typ.	Max.	Unit	Test Conditions
Supply current*1	Middle-speed operating modes 1A and 1B	Normal operating mode	No peripheral operation	ICLK = 32 MHz*2	I_{CC}	7.0	—	mA	
				ICLK = 20 MHz*3		6.0	—		
			All peripheral operation: Normal	ICLK = 32 MHz*4		26	—		
				ICLK = 20 MHz*5		18.5	—		
			All peripheral operation: Max.	ICLK = 32 MHz*4		—	40		
				ICLK = 20 MHz*5		—	30		
		Sleep mode	No peripheral operation	ICLK = 32 MHz		5.0	—		
				ICLK = 20 MHz		4.6	—		
			All peripheral operation: Normal	ICLK = 32 MHz		15.5	—		
				ICLK = 20 MHz		12	—		
		All-module clock stop mode		ICLK = 32 MHz		4.5	—		
				ICLK = 20 MHz		4.5	—		
		Increase during BGO operation*6	Middle-speed operating mode 1A			25	—		
			Middle-speed operating mode 1B			20	—		
	Low-speed operating mode 1	Normal operating mode	No peripheral operation*7	ICLK = 1 MHz		0.68	—		
			All peripheral operation: Normal*8	ICLK = 1 MHz		2.4	—		
			All peripheral operation: Max. *8	ICLK = 1 MHz		—	7		
		Sleep mode	No peripheral operation	ICLK = 1 MHz		0.6	—		
			All peripheral operation: Normal	ICLK = 1 MHz		2	—		
		All-module clock stop mode				0.58	—		
	Low-speed operating mode 2	Normal operating mode	No peripheral operation*9	ICLK = 32 kHz		0.024	—		
			All peripheral operation: Normal*10	ICLK = 32 kHz		0.05	—		
			All peripheral operation: Max. *10	ICLK = 32 kHz		—	3*11		
		Sleep mode	No peripheral operation	ICLK = 32 kHz		0.02	—		
			All peripheral operation: Normal	ICLK = 32 kHz		0.04	—		
		All-module clock stop mode				0.018	—		

Note 1. Supply current values do not include output charge/discharge current from all pins. The values apply when internal pull-up MOSs are in the off state.

Note 2. Clock supply to the peripheral functions is stopped. This does not include BGO operation. The clock source is PLL and the VCO oscillation frequency is 64 MHz. BCLK, FCLK, and PCLK are set to divided by 64.

Note 3. Clock supply to the peripheral functions is stopped. This does not include BGO operation. The clock source is HOCO and the oscillation frequency is 40 MHz. BCLK, FCLK, and PCLK are set to divided by 64.

Note 4. Clocks are supplied to the peripheral functions. This does not include BGO operation. The clock source is PLL and the VCO oscillation frequency is 64 MHz. BCLK, FCLK, and PCLK are ICLK divided by 1.

Note 5. Clocks are supplied to the peripheral functions. This does not include BGO operation. The clock source is HOCO and the oscillation frequency is 40 MHz. BCLK, FCLK, and PCLK are ICLK divided by 1.
Note 6. This is the increase if data is programmed to or erasing from the ROM or E2 DataFlash during program execution.
Note 7. Clock supply to the peripheral functions is stopped. This does not include BGO operation. The clock source is HOCO and the oscillation frequency is 32 MHz. BCLK, FCLK, and PCLK are set to divided by 64.
Note 8. Clocks are supplied to the peripheral functions. This does not include BGO operation. The clock source is HOCO and the oscillation frequency is 32 MHz. BCLK, FCLK, and PCLK are ICLK divided by 1.
Note 9. Clock supply to the peripheral functions is stopped. This does not include BGO operation. The clock source is the sub oscillation circuit. BCLK, FCLK, and PCLK are set to divided by 64.
Note 10. Clocks are supplied to the peripheral functions. This does not include BGO operation. The clock source is the sub oscillation circuit. BCLK, FCLK, and PCLK are ICLK divided by 1.
Note 11. Value when the main clock continues oscillating at 12.5 MHz.

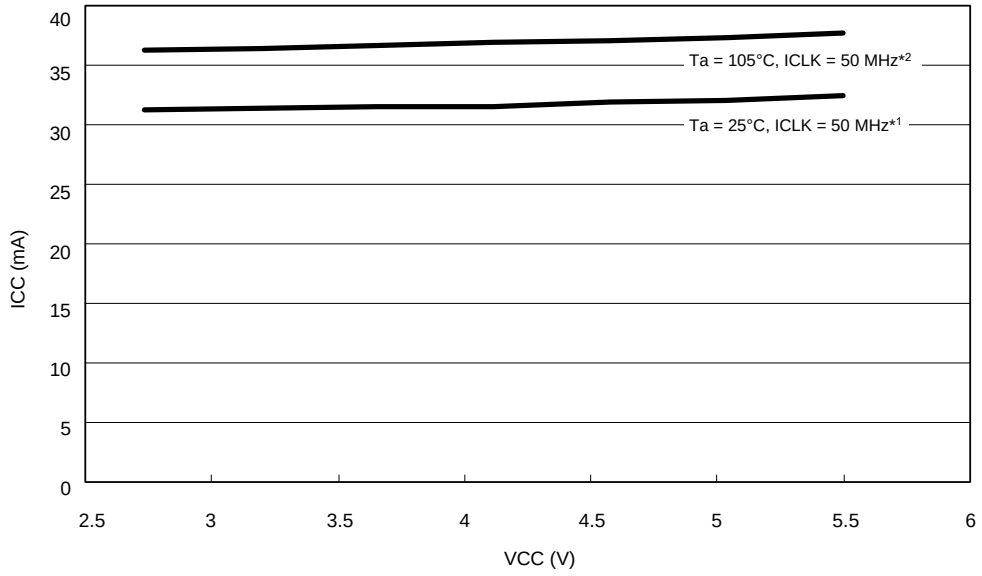

Note 1. All peripheral operation is normal. This does not include BGO operation.
Average value of the tested middle samples during product evaluation.
Note 2. All peripheral operation is maximum. This does not include BGO operation.
Average value of the tested upper-limit samples during product evaluation.

Figure 5.9 Voltage Dependency in High-Speed Operating Mode (Reference Data) for Chip Version C

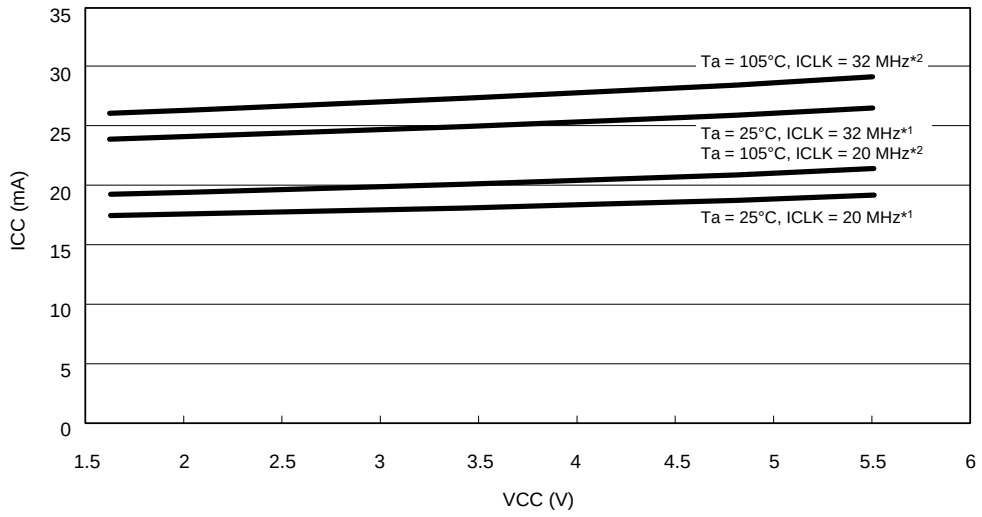

Note 1. All peripheral operation is normal. This does not include BGO operation.
Average value of the tested middle samples during product evaluation.
Note 2. All peripheral operation is maximum. This does not include BGO operation.
Average value of the tested upper-limit samples during product evaluation.

Figure 5.10 Voltage Dependency in Middle-Speed Operating Modes 1A and 1B (Reference Data) for Chip Version C

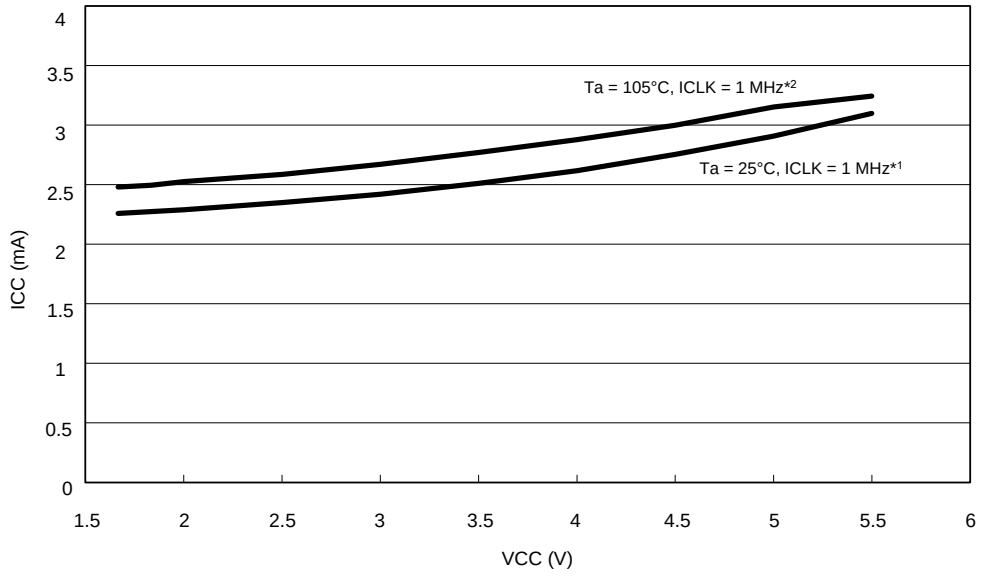

Note 1. All peripheral operation is normal.
Average value of the tested middle samples during product evaluation.
Note 2. All peripheral operation is maximum.
Average value of the tested upper-limit samples during product evaluation.

Figure 5.11 Voltage Dependency in Low-Speed Operating Mode 1 (Reference Data) for Chip Version C

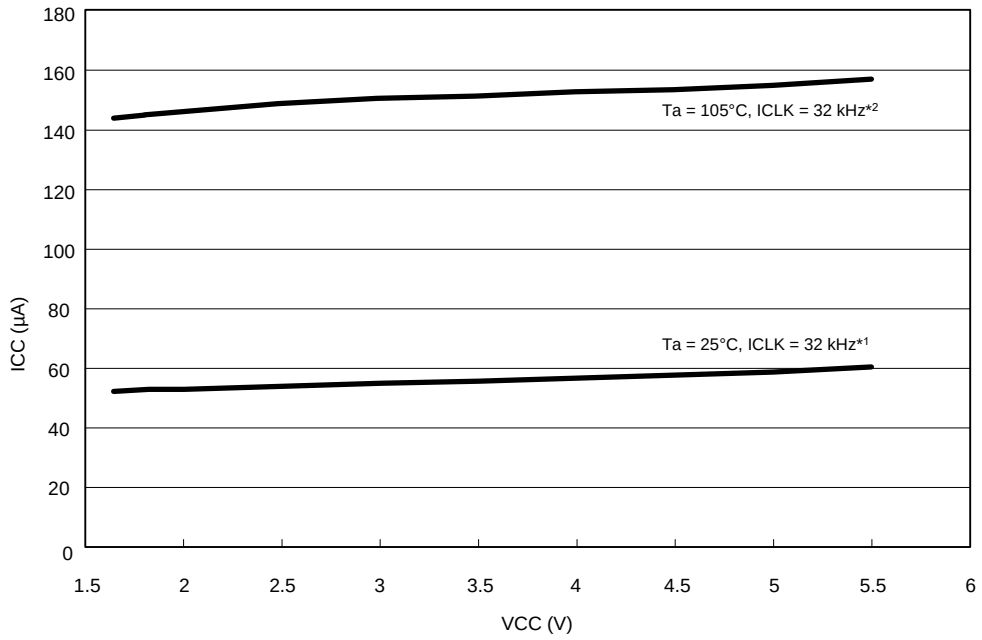

Note 1. All peripheral operation is normal.
Average value of the tested middle samples during product evaluation.
Note 2. All peripheral operation is maximum.
Average value of the tested upper-limit samples during product evaluation.

Figure 5.12 Voltage Dependency in Low-Speed Operating Mode 2 (Reference Data) for Chip Version C

[Chip version C]

Table 5.11 DC Characteristics (10)

Conditions: VCC = AVCC0 = 1.62 to 5.5 V, VSS = AVSS0 = 0 V, T_a = –40 to +105°C

Item				Symbol	Typ.*3	Max.	Unit	Test Conditions
Supply current*1	Software standby mode*2	Flash memory power supplied, HOCO power supplied, POR low power consumption function disabled (SOFTCUT[2:0] bits = 000b)	T_a = 25°C	I_{CC}	160	—	μA	
			T_a = 55°C		188	—		
			T_a = 85°C		220	—		
			T_a = 105°C		250	—		
		Flash memory power supplied, HOCO power not supplied, POR low power consumption function enabled (SOFTCUT[2:0] bits = 110b)	T_a = 25°C		2.6	10.5		
			T_a = 55°C		3.8	22		
			T_a = 85°C		9.0	80		
			T_a = 105°C		20	150		
		Flash memory power not supplied, HOCO power not supplied, POR low power consumption function enabled (SOFTCUT[2:0] bits = 111b)	T_a = 25°C		2.0	8.2		
			T_a = 55°C		2.9	17		
			T_a = 85°C		6.8	53		
			T_a = 105°C		15	115		
	Deep software standby mode*2	Flash memory power not supplied, HOCO power not supplied, POR low power consumption function enabled (DEEPCUT1 bit = 1)	T_a = 25°C		0.5	0.9		
			T_a = 55°C		0.6	1.2		
			T_a = 85°C		0.9	20		
			T_a = 105°C		1.8	25		
	Increments produced by running voltage detection circuits and disabling the POR low power consumption function				1.4	—		
	Increment for RTC operation (low CL)				0.8	—		
	Increment for RTC operation (standard CL)				2.0	—		

Note 1. Supply current values are with all output pins unloaded and all input pull-up MOSs in the off state.
Note 2. The IWDT and LVD are stopped.
Note 3. VCC = 3.3 V.

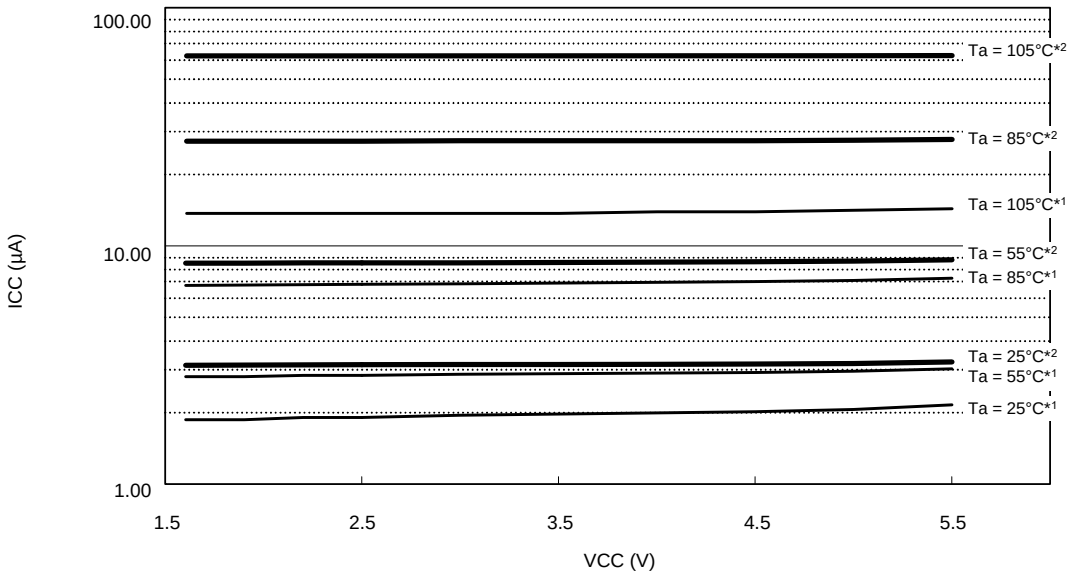

Note 1. Average value of the tested middle samples during product evaluation.
Note 2. Average value of the tested upper-limit samples during product evaluation.

Figure 5.13 Voltage Dependency in Software Standby Mode (SOFTCUT[2:0] Bits = 111b) (Reference Data) for Chip Version C

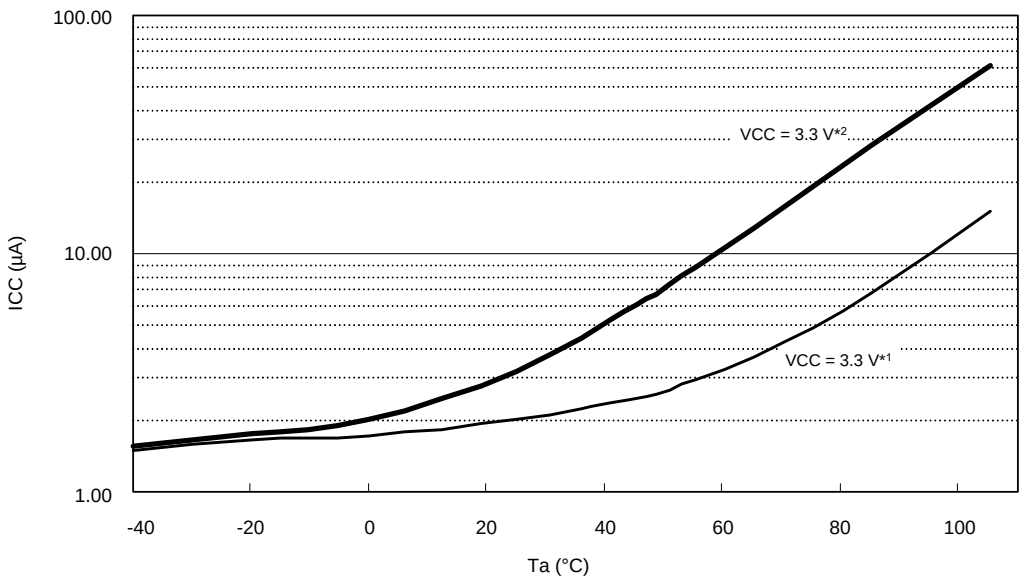

Note 1. Average value of the tested middle samples during product evaluation.
Note 2. Average value of the tested upper-limit samples during product evaluation.

Figure 5.14 Temperature Dependency in Software Standby Mode (SOFTCUT[2:0] Bits = 111b) (Reference Data) for Chip Version C

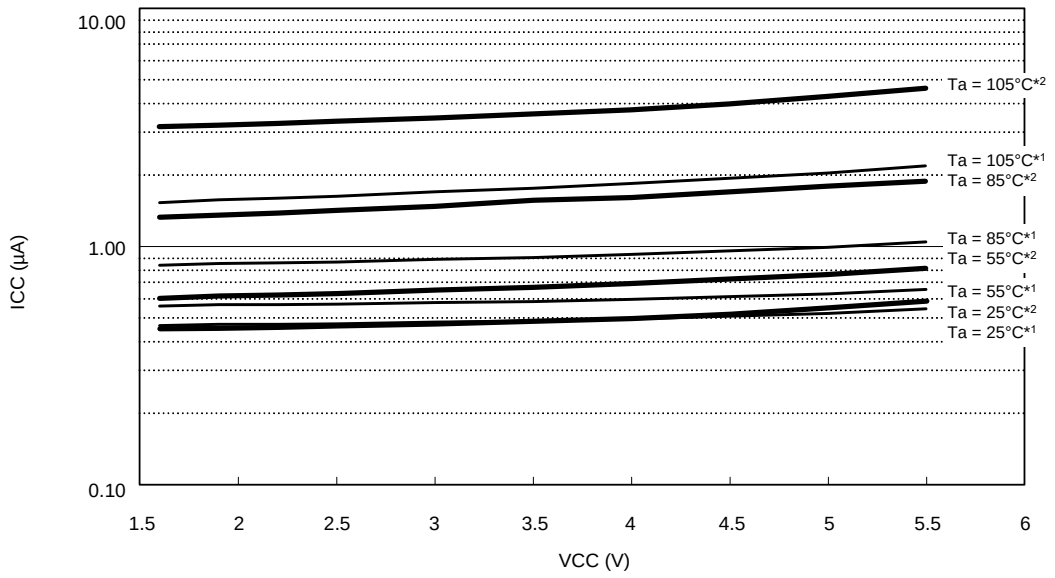

Note 1. Average value of the tested middle samples during product evaluation.
Note 2. Average value of the tested upper-limit samples during product evaluation.

Figure 5.15 Voltage Dependency in Deep Software Standby Mode (DEEPCUT1 Bit = 1) (Reference Data) for Chip Version C

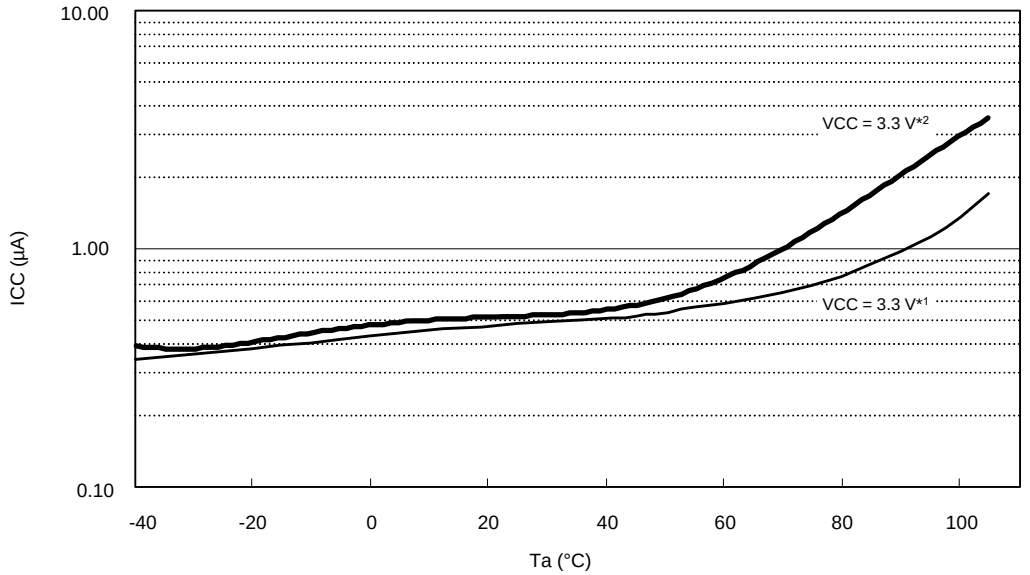

Note 1. Average value of the tested middle samples during product evaluation
Note 2. Average value of the tested upper-limit samples during product evaluation.

Figure 5.16 Temperature Dependency in Deep Software Standby Mode (DEEPCUT1 Bit = 1) (Reference Data) for Chip Version C

[Chip version B with 256 Kbytes or less of flash memory and 48 to 100 pins]

Table 5.12 DC Characteristics (11)

Conditions: VCC = AVCC0 = 2.7 to 5.5 V, VSS = AVSS0 = VREFL = VREFL0 = 0 V, T_a = –40 to +105°C

Item					Symbol	Typ.	Max.	Unit	Test Conditions
Supply current*1	High-speed operating mode	Normal operating mode	No peripheral operation*2	ICLK = 50 MHz	I_{CC}	7.2	—	mA	
			All peripheral operation: Normal*3	ICLK = 50 MHz		23.5	—		
			All peripheral operation: Max.*3	ICLK = 50 MHz		—	45		
		Sleep mode	No peripheral operation	ICLK = 50 MHz		4.3	—		
			All peripheral operation: Normal	ICLK = 50 MHz		12	—		
		All-module clock stop mode		ICLK = 50 MHz		3.7	—		
		Increase during BGO operation*4				20	—		

Note 1. Supply current values do not include output charge/discharge current from all pins. The values apply when internal pull-up MOSs are in the off state.

Note 2. Clock supply to the peripheral functions is stopped. This does not include BGO operation. The clock source is PLL and the VCO oscillation frequency is 100 MHz. BCLK, FCLK, and PCLK are set to divided by 64.

Note 3. Clocks are supplied to the peripheral functions. This does not include BGO operation. The clock source is PLL and the VCO oscillation frequency is 100 MHz. BCLK, FCLK, and PCLK are ICLK divided by 2.

Note 4. This is the increase if data is programmed to or erasing from the ROM or E2 DataFlash during program execution.

[Chip version B with 256 Kbytes or less of flash memory and 48 to 100 pins]

Table 5.13 DC Characteristics (12)

Conditions: VCC = AVCC0 = 1.62 to 5.5 V, VSS = AVSS0 = VREFL = VREFL0 = 0 V, T_a = –40 to +105°C

Item					Symbol	Typ.	Max.	Unit	Test Conditions
Supply current*1	Middle-speed operating modes 1A and 1B	Normal operating mode	No peripheral operation	ICLK = 32 MHz*2	I_{CC}	5.3	—	mA	
				ICLK = 20 MHz*3		4.6	—		
			All peripheral operation: Normal	ICLK = 32 MHz*4		20.1	—		
				ICLK = 20 MHz*5		14.3	—		
			All peripheral operation: Max.	ICLK = 32 MHz*4		—	35		
				ICLK = 20 MHz*5		—	—		
		Sleep mode	No peripheral operation	ICLK = 32 MHz		3.4	—		
				ICLK = 20 MHz		3.3	—		
			All peripheral operation: Normal	ICLK = 32 MHz		11.5	—		
				ICLK = 20 MHz		9	—		
		All-module clock stop mode		ICLK = 32 MHz		3	—		
				ICLK = 20 MHz		3	—		
		Increase during BGO operation*6	Middle-speed operating mode 1A			17	—		
			Middle-speed operating mode 1B			17	—		
	Middle-speed operating modes 2A and 2B	Normal operating mode	No peripheral operation*2	ICLK = 32 MHz		4.7	—		
				ICLK = 16 MHz		3.4	—		
				ICLK = 8 MHz		2.7	—		
			All peripheral operation: Normal*4	ICLK = 32 MHz		19.6	—		
				ICLK =16 MHz		11.3	—		
				ICLK = 8 MHz		7.2	—		
			All peripheral operation: Max.*4	ICLK = 32 MHz		—	34		
				ICLK = 16 MHz		—	—		
				ICLK = 8 MHz		—	—		
		Sleep mode	No peripheral operation	ICLK = 32 MHz		2.8	—		
				ICLK = 16 MHz		2.5	—		
				ICLK = 8 MHz		2.2	—		
			All peripheral operation: Normal	ICLK = 32 MHz		11	—		
				ICLK = 16 MHz		7.2	—		
				ICLK = 8 MHz		5.3	—		
		All-module clock stop mode		ICLK = 32 MHz		2.4	—		
				ICLK = 16 MHz		2.2	—		
				ICLK = 8 MHz		2.1	—		
		Increase during BGO operation*6	Middle-speed operating mode 1A			17	—		
			Middle-speed operating mode 1B			17	—		

Item					Symbol	Typ.	Max.	Unit	Test Conditions
Supply current*1	Low-speed operating mode 1	Normal operating mode	No peripheral operation*7	ICLK = 8 MHz	I_{CC}	2	—	mA	
				ICLK = 4 MHz		1.6	—		
				ICLK = 2 MHz		1.5	—		
			All peripheral operation: Normal*8	ICLK = 8 MHz		6	—		
				ICLK = 4 MHz		3.8	—		
				ICLK = 2 MHz		2.8	—		
			All peripheral operation: Max.*8	ICLK = 8 MHz		—	12		
				ICLK = 4 MHz		—	—		
				ICLK = 2 MHz		—	—		
		Sleep mode	No peripheral operation	ICLK = 8 MHz		1.5	—		
				ICLK = 4 MHz		1.4	—		
				ICLK = 2 MHz		1.3	—		
			All peripheral operation: Normal	ICLK = 8 MHz		3.6	—		
				ICLK = 4 MHz		2.7	—		
				ICLK = 2 MHz		2.2	—		
		All-module clock stop mode		ICLK = 8 MHz		1.4	—		
				ICLK = 4 MHz		1.3	—		
				ICLK = 2 MHz		1.2	—		
	Low-speed operating mode 2	Normal operating mode	No peripheral operation*9	ICLK = 32 kHz		0.021	—		
			All peripheral operation: Normal*10	ICLK = 32 kHz		0.05	—		
			All peripheral operation: Max.*10	ICLK = 32 kHz		—	3*11		
		Sleep mode	No peripheral operation	ICLK = 32 kHz		0.017	—		
			All peripheral operation: Normal	ICLK = 32 kHz		0.034	—		
		All-module clock stop mode				0.016	—		

Note 1. Supply current values do not include output charge/discharge current from all pins. The values apply when internal pull-up MOSs are in the off state.
Note 2. Clock supply to the peripheral functions is stopped. This does not include BGO operation. The clock source is PLL and the VCO oscillation frequency is 64 MHz. BCLK, FCLK, and PCLK are set to divided by 64.
Note 3. Clock supply to the peripheral functions is stopped. This does not include BGO operation. The clock source is HOCO and the oscillation frequency is 40 MHz. BCLK, FCLK, and PCLK are set to divided by 64.
Note 4. Clocks are supplied to the peripheral functions. This does not include BGO operation. The clock source is PLL and the VCO oscillation frequency is 64 MHz. BCLK, FCLK, and PCLK are ICLK divided by 1.
Note 5. Clocks are supplied to the peripheral functions. This does not include BGO operation. The clock source is HOCO and the oscillation frequency is 40 MHz. BCLK, FCLK, and PCLK are ICLK divided by 1.
Note 6. This is the increase if data is programmed to or erasing from the ROM or E2 DataFlash during program execution.
Note 7. Clock supply to the peripheral functions is stopped. This does not include BGO operation. The clock source is HOCO and the oscillation frequency is 32 MHz. BCLK, FCLK, and PCLK are set to divided by 64.
Note 8. Clocks are supplied to the peripheral functions. This does not include BGO operation. The clock source is HOCO and the oscillation frequency is 32 MHz. BCLK, FCLK, and PCLK are ICLK divided by 1.
Note 9. Clock supply to the peripheral functions is stopped. This does not include BGO operation. The clock source is the sub oscillation circuit. BCLK, FCLK, and PCLK are set to divided by 64.
Note 10. Clocks are supplied to the peripheral functions. This does not include BGO operation. The clock source is the sub oscillation circuit. BCLK, FCLK, and PCLK are ICLK divided by 1.
Note 11. Value when the main clock continues oscillating at 12.5 MHz.

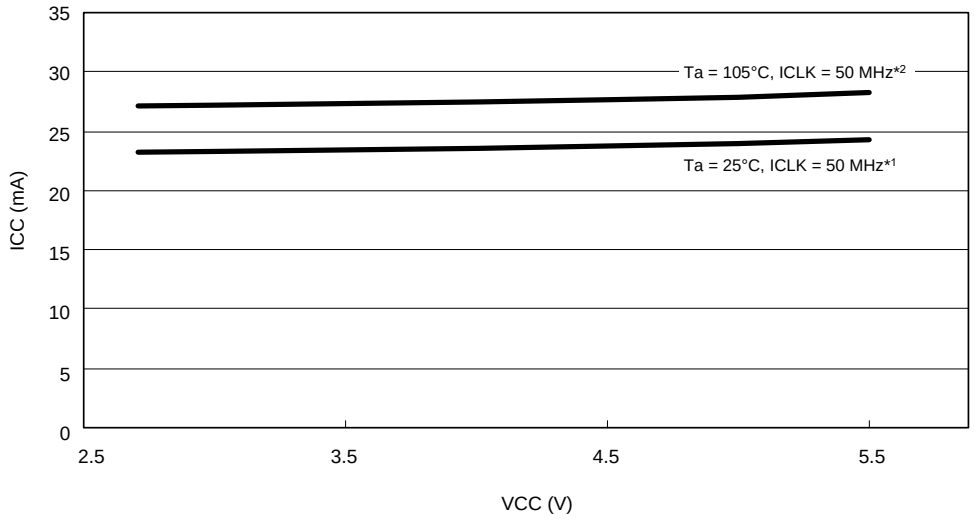

Note 1. All peripheral operation is normal. This does not include BGO operation.
Average value of the tested middle samples during product evaluation.
Note 2. All peripheral operation is maximum. This does not include BGO operation.
Average value of the tested upper-limit samples during product evaluation.

Figure 5.17 Voltage Dependency in High-Speed Operating Mode (Reference Data) for Chip Version B with 256 Kbytes or Less of Flash Memory and 48 to 100 Pins

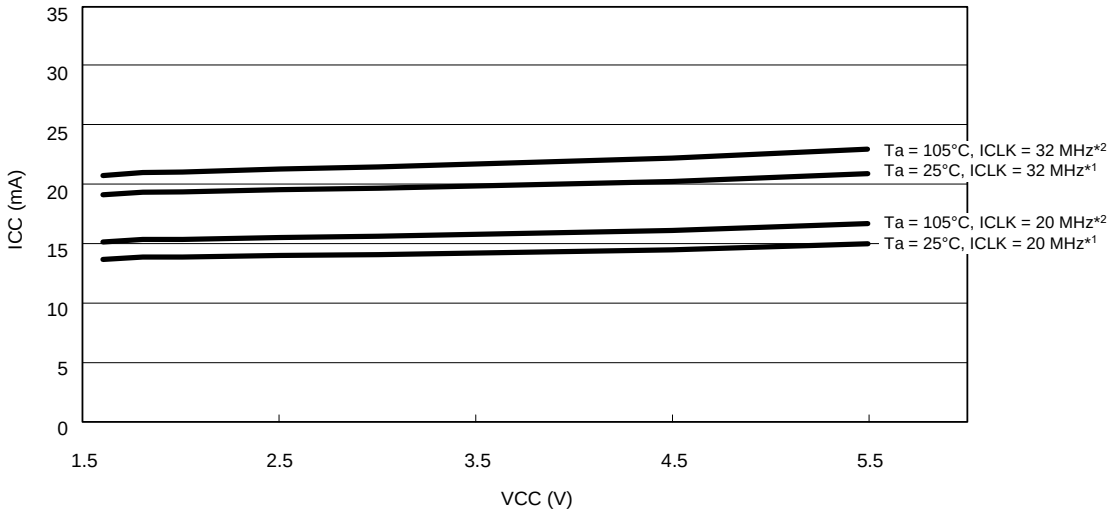

Note 1. All peripheral operation is normal. This does not include BGO operation.
Average value of the tested middle samples during product evaluation.
Note 2. All peripheral operation is maximum. This does not include BGO operation.
Average value of the tested upper-limit samples during product evaluation.

Figure 5.18 Voltage Dependency in Middle-Speed Operating Modes 1A and 1B (Reference Data) for Chip Version B with 256 Kbytes or Less of Flash Memory and 48 to 100 Pins

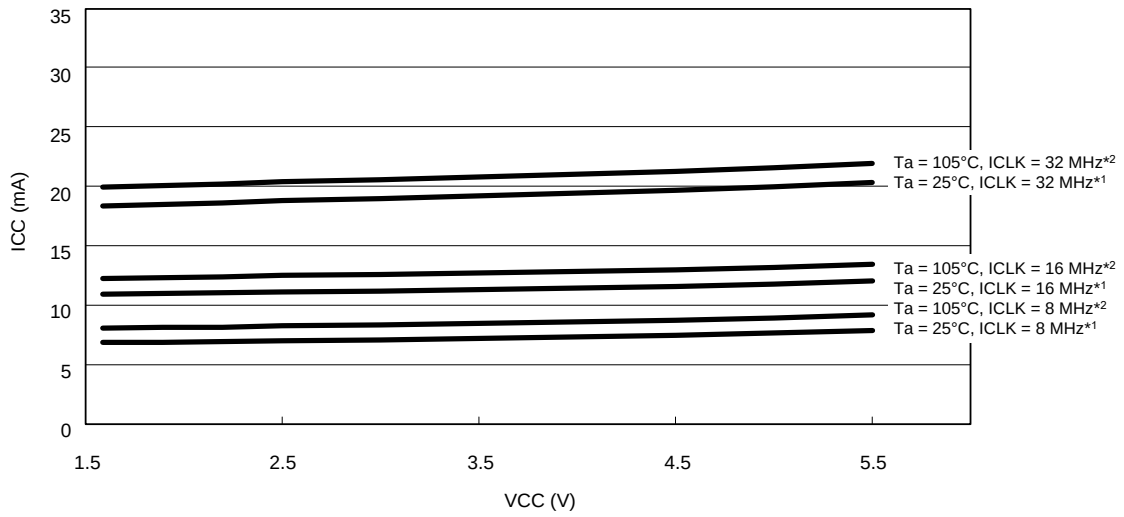

Note 1. All peripheral operation is normal. This does not include BGO operation.
Average value of the tested middle samples during product evaluation.
Note 2. All peripheral operation is maximum. This does not include BGO operation.
Average value of the tested upper-limit samples during product evaluation.

Figure 5.19 Voltage Dependency in Middle-Speed Operating Modes 2A and 2B (Reference Data) for Chip Version B with 256 Kbytes or Less of Flash Memory and 48 to 100 Pins

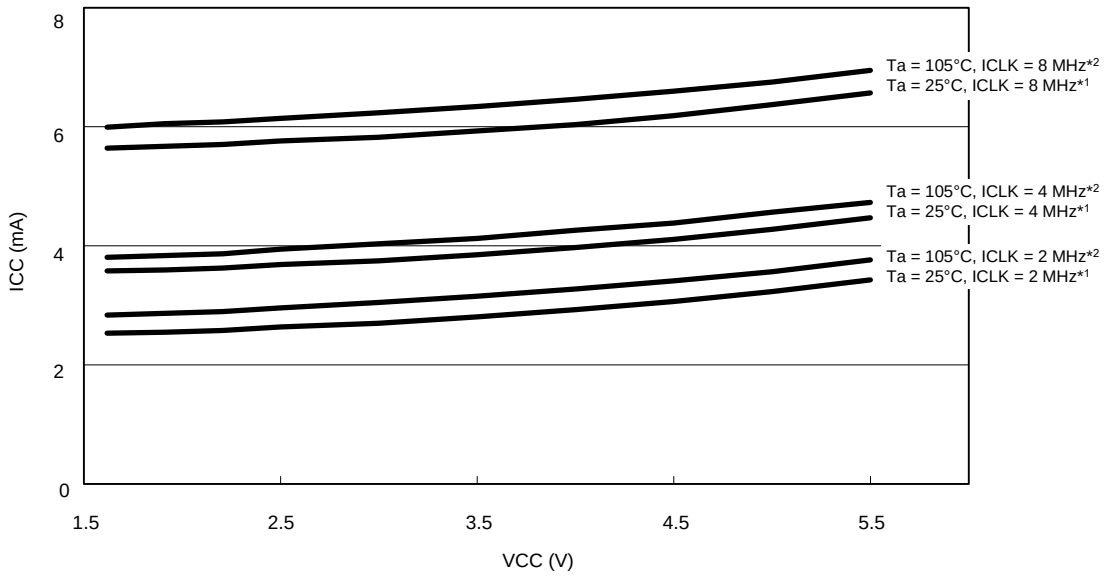

Note 1. All peripheral operation is normal.
Average value of the tested middle samples during product evaluation.
Note 2. All peripheral operation is maximum.
Average value of the tested upper-limit samples during product evaluation.

Figure 5.20 Voltage Dependency in Low-Speed Operating Mode 1 (Reference Data) for Chip Version B with 256 Kbytes or Less of Flash Memory and 48 to 100 Pins

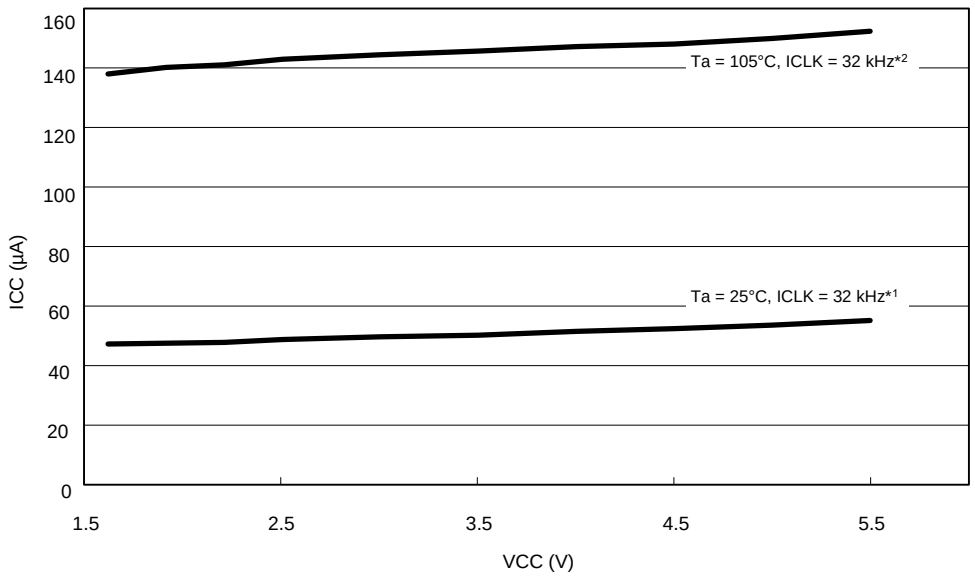

Note 1. All peripheral operation is normal.
Average value of the tested middle samples during product evaluation.
Note 2. All peripheral operation is maximum.
Average value of the tested upper-limit samples during product evaluation.

Figure 5.21 Voltage Dependency in Low-Speed Operating Mode 2 (Reference Data) for Chip Version B with 256 Kbytes or Less of Flash Memory and 48 to 100 Pins

[Chip version B with 256 Kbytes or less of flash memory and 48 to 100 pins]

Table 5.14 DC Characteristics (13)

Conditions: VCC = AVCC0 = 1.62 to 5.5 V, VSS = AVSS0 = 0 V, T_a = –40 to +105°C

Item				Symbol	Typ.*3	Max.	Unit	Test Conditions
Supply current*1	Software standby mode*2	Flash memory power supplied, HOCO power supplied, POR low power consumption function disabled (SOFTCUT[2:0] bits = 000b)	T_a = 25°C	I_{CC}	10	18	μA	
			T_a = 55°C		13	35		
			T_a = 85°C		20	81		
			T_a = 105°C		34	154		
		Flash memory power supplied, HOCO power not supplied, POR low power consumption function enabled (SOFTCUT[2:0] bits = 110b)	T_a = 25°C		1.8	7.7		
			T_a = 55°C		3.3	20		
			T_a = 85°C		9.2	60		
			T_a = 105°C		20	124		
	Deep software standby mode*2	Flash memory power not supplied, HOCO power not supplied, POR low power consumption function enabled (DEEPCUT1 bit = 1)	T_a = 25°C		0.4	0.8		
			T_a = 55°C		0.5	1.0		
			T_a = 85°C		0.7	2.5		
			T_a = 105°C		1.4	6.3		
	Increments produced by running voltage detection circuits and disabling the POR low power consumption function				1.4	—		
	Increment for RTC operation (low CL)				0.8	—		
	Increment for RTC operation (standard CL)				2.0	—		

Note 1. Supply current values are with all output pins unloaded and all input pull-up MOSs in the off state.
Note 2. The IWDT and LVD are stopped.
Note 3. VCC = 3.3 V.

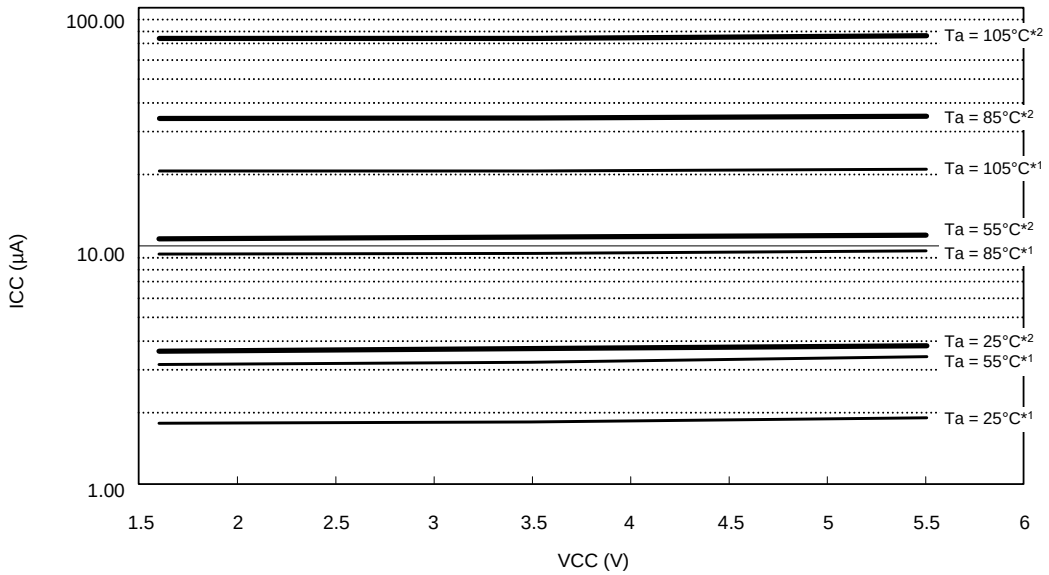

Note 1. Average value of the tested middle samples during product evaluation.
Note 2. Average value of the tested upper-limit samples during product evaluation.

Figure 5.22 Voltage Dependency in Software Standby Mode (SOFTCUT[2:0] Bits = 110b) (Reference Data) for Chip Version B with 256 Kbytes or Less of Flash Memory and 48 to 100 Pins

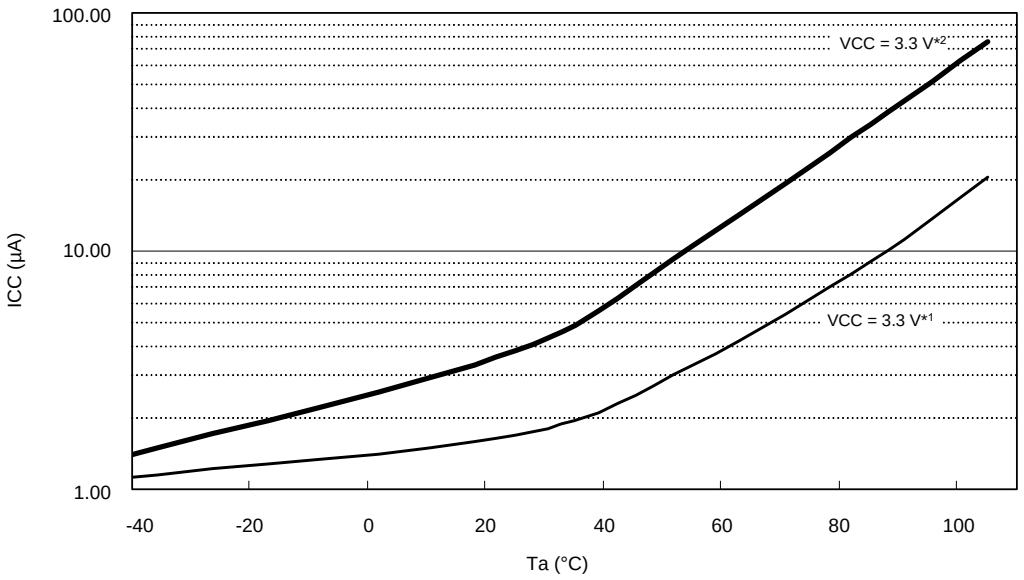

Note 1. Average value of the tested middle samples during product evaluation.
Note 2. Average value of the tested upper-limit samples during product evaluation.

Figure 5.23 Temperature Dependency in Software Standby Mode (SOFTCUT[2:0] Bits = 110b) (Reference Data) for Chip Version B with 256 Kbytes or Less of Flash Memory and 48 to 100 Pins

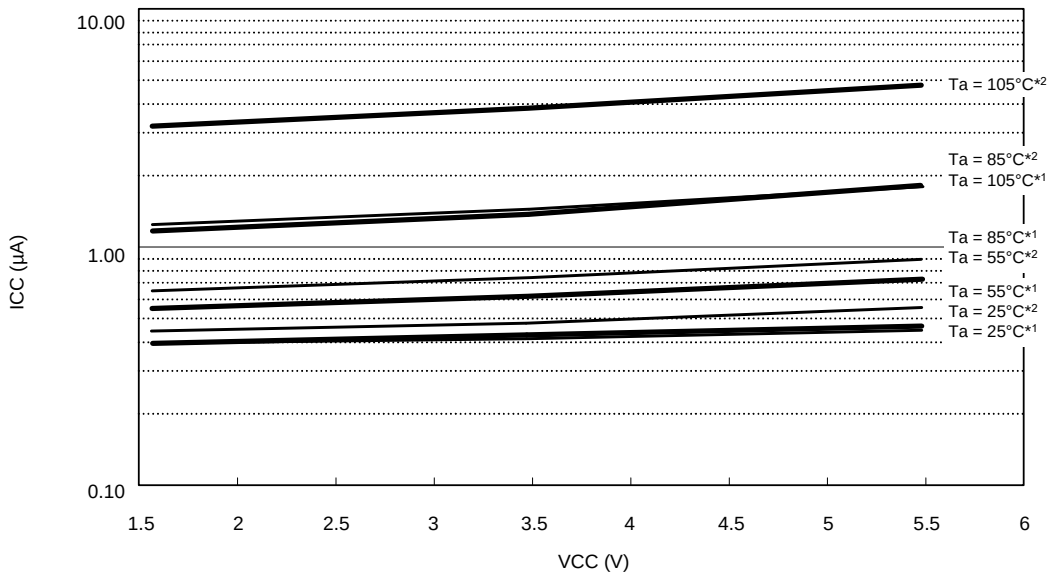

Note 1. Average value of the tested middle samples during product evaluation.
Note 2. Average value of the tested upper-limit samples during product evaluation.

Figure 5.24 Voltage Dependency in Deep Software Standby Mode (DEEPCUT1 Bit = 1) (Reference Data) for Chip Version B with 256 Kbytes or Less of Flash Memory and 48 to 100 Pins

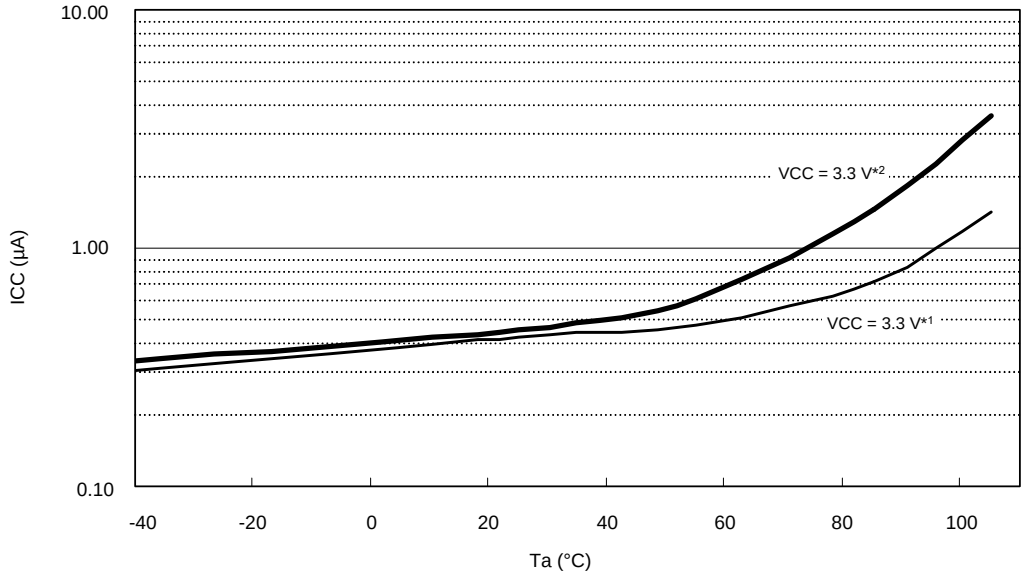

Note 1. Average value of the tested middle samples during product evaluation.
Note 2. Average value of the tested upper-limit samples during product evaluation.

Figure 5.25 Temperature Dependency in Deep Software Standby Mode (DEEPCUT1 Bit = 1) (Reference Data) for Chip Version B with 256 Kbytes or Less of Flash Memory and 48 to 100 Pins

[Chip version B with 768 Kbytes/1 Mbyte of flash memory and 100 to 145 pins]

Table 5.15 DC Characteristics (14)

Conditions: VCC = AVCC0 = 2.7 to 5.5 V, VSS = AVSS0 = VREFL = VREFL0 = 0 V, T_a = –40 to +105°C

Item					Symbol	Typ.	Max.	Unit	Test Conditions
Supply current*1	High-speed operating mode	Normal operating mode	No peripheral operation*2	ICLK = 50 MHz	I_{CC}	7.8	—	mA	
			All peripheral operation: Normal*3	ICLK = 50 MHz		29.8	—		
			All peripheral operation: Max.*3	ICLK = 50 MHz		—	45		
		Sleep mode	No peripheral operation	ICLK = 50 MHz		4.3	—		
			All peripheral operation: Normal	ICLK = 50 MHz		13.5	—		
		All-module clock stop mode				3.7	—		
		Increase during BGO operation*4				23	—		

Note 1. Supply current values do not include output charge/discharge current from all pins. The values apply when internal pull-up MOSs are in the off state.

Note 2. Clock supply to the peripheral functions is stopped. This does not include BGO operation. The clock source is PLL and the VCO oscillation frequency is 100 MHz. BCLK, FCLK, and PCLK are set to divided by 64.

Note 3. Clocks are supplied to the peripheral functions. This does not include BGO operation. The clock source is PLL and the VCO oscillation frequency is 100 MHz. BCLK, FCLK, and PCLK are ICLK divided by 2.

Note 4. This is the increase if data is programmed to or erasing from the ROM or E2 DataFlash during program execution.

[Chip version B with 768 Kbytes/1 Mbyte of flash memory and 100 to 145 pins]

Table 5.16 DC Characteristics (15)

Conditions: VCC = AVCC0 = 1.62 to 5.5 V, VSS = AVSS0 = VREFL = VREFL0 = 0 V, T_a = –40 to +105°C

Item					Symbol	Typ.	Max.	Unit	Test Conditions
Supply current*1	Middle-speed operating modes 1A and 1B	Normal operating mode	No peripheral operation	ICLK = 32 MHz*2	I_{CC}	5.6	—	mA	
				ICLK = 20 MHz*3		4.6	—		
			All peripheral operation: Normal	ICLK = 32 MHz*4		25.5	—		
				ICLK = 20 MHz*5		17.6	—		
			All peripheral operation: Max.	ICLK = 32 MHz*4		—	35		
				ICLK = 20 MHz*5		—	—		
		Sleep mode	No peripheral operation	ICLK = 32 MHz		3.4	—		
				ICLK = 20 MHz		3.3	—		
			All peripheral operation: Normal	ICLK = 32 MHz		13.4	—		
				ICLK = 20 MHz		10.2	—		
		All-module clock stop mode		ICLK = 32 MHz		3	—		
				ICLK = 20 MHz		3	—		
		Increase during BGO operation*6	Middle-speed operating mode 1A			23	—		
			Middle-speed operating mode 1B			20	—		
	Middle-speed operating modes 2A and 2B	Normal operating mode	No peripheral operation*2	ICLK = 32 MHz		5.1	—		
				ICLK = 16 MHz		3.5	—		
				ICLK = 8 MHz		2.7	—		
			All peripheral operation: Normal*4	ICLK = 32 MHz		25	—		
				ICLK = 16 MHz		14	—		
				ICLK = 8 MHz		8.5	—		
			All peripheral operation: Max.*4	ICLK = 32 MHz		—	34		
				ICLK = 16 MHz		—	—		
				ICLK = 8 MHz		—	—		
		Sleep mode	No peripheral operation	ICLK = 32 MHz		2.9	—		
				ICLK = 16 MHz		2.5	—		
				ICLK = 8 MHz		2.2	—		
			All peripheral operation: Normal	ICLK = 32 MHz		13	—		
				ICLK = 16 MHz		8.2	—		
				ICLK = 8 MHz		5.8	—		
		All-module clock stop mode		ICLK = 32 MHz		2.5	—		
				ICLK = 16 MHz		2.2	—		
				ICLK = 8 MHz		2.1	—		
		Increase during BGO operation*6	Middle-speed operating mode 1A			23	—		
			Middle-speed operating mode 1B			20	—		

Item					Symbol	Typ.	Max.	Unit	Test Conditions
Supply current*1	Low-speed operating mode 1	Normal operating mode	No peripheral operation*7	ICLK = 8 MHz	I_{CC}	2.1	—	mA	
				ICLK = 4 MHz		1.7	—		
				ICLK = 2 MHz		1.5	—		
			All peripheral operation: Normal*8	ICLK = 8 MHz		7.3	—		
				ICLK = 4 MHz		4.5	—		
				ICLK = 2 MHz		3.1	—		
			All peripheral operation: Max.*7	ICLK = 8 MHz		—	12		
				ICLK = 4 MHz		—	—		
				ICLK = 2 MHz		—	—		
		Sleep mode	No peripheral operation	ICLK = 8 MHz		1.5	—		
				ICLK = 4 MHz		1.4	—		
				ICLK = 2 MHz		1.3	—		
			All peripheral operation: Normal	ICLK = 8 MHz		4.1	—		
				ICLK = 4 MHz		3.0	—		
				ICLK = 2 MHz		2.3	—		
		All-module clock stop mode		ICLK = 8 MHz		1.4	—		
				ICLK = 4 MHz		1.3	—		
				ICLK = 2 MHz		1.2	—		
	Low-speed operating mode 2	Normal operating mode	No peripheral operation*9	ICLK = 32 kHz		0.022	—		
			All peripheral operation: Normal*10	ICLK = 32 kHz		0.06	—		
			All peripheral operation: Max.*10	ICLK = 32 kHz		—	3*11		
		Sleep mode	No peripheral operation	ICLK = 32 kHz		0.017	—		
			All peripheral operation: Normal	ICLK = 32 kHz		0.036	—		
		All-module clock stop mode				0.017	—		

Note 1. Supply current values do not include output charge/discharge current from all pins. The values apply when internal pull-up MOSs are in the off state.
Note 2. Clock supply to the peripheral functions is stopped. This does not include BGO operation. The clock source is PLL and the VCO oscillation frequency is 64 MHz. BCLK, FCLK, and PCLK are set to divided by 64.
Note 3. Clock supply to the peripheral functions is stopped. This does not include BGO operation. The clock source is HOCO and the oscillation frequency is 40 MHz. BCLK, FCLK, and PCLK are set to divided by 64.
Note 4. Clocks are supplied to the peripheral functions. This does not include BGO operation. The clock source is PLL and the VCO oscillation frequency is 64 MHz. BCLK, FCLK, and PCLK are ICLK divided by 1.
Note 5. Clocks are supplied to the peripheral functions. This does not include BGO operation. The clock source is HOCO and the oscillation frequency is 40 MHz. BCLK, FCLK, and PCLK are ICLK divided by 1.
Note 6. This is the increase if data is programmed to or erasing from the ROM or E2 DataFlash during program execution.
Note 7. Clock supply to the peripheral functions is stopped. This does not include BGO operation. The clock source is HOCO and the oscillation frequency is 32 MHz. BCLK, FCLK, and PCLK are set to divided by 64.
Note 8. Clocks are supplied to the peripheral functions. This does not include BGO operation. The clock source is HOCO and the oscillation frequency is 32 MHz. BCLK, FCLK, and PCLK are ICLK divided by 1.
Note 9. Clock supply to the peripheral functions is stopped. This does not include BGO operation. The clock source is the sub oscillation circuit. BCLK, FCLK, and PCLK are set to divided by 64.
Note 10. Clocks are supplied to the peripheral functions. This does not include BGO operation. The clock source is the sub oscillation circuit. BCLK, FCLK, and PCLK are ICLK divided by 1.
Note 11. Value when the main clock continues oscillating at 12.5 MHz.

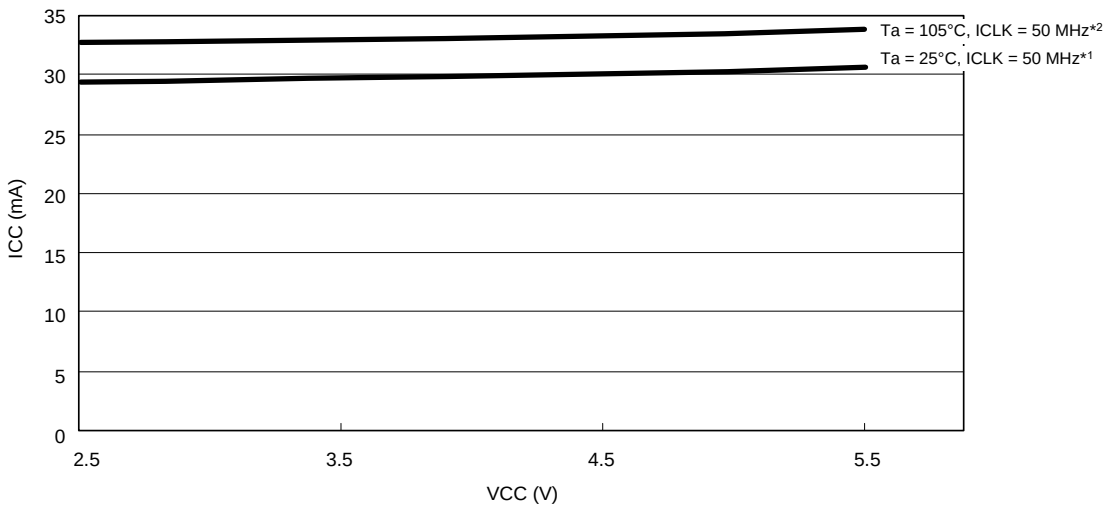

Note 1. All peripheral operation is normal. This does not include BGO operation.
Average value of the tested middle samples during product evaluation.
Note 2. All peripheral operation is maximum. This does not include BGO operation.
Average value of the tested upper-limit samples during product evaluation.

Figure 5.26 Voltage Dependency in High-Speed Operating Mode (Reference Data) for Chip Version B with 768 Kbytes/1 Mbyte of Flash Memory and 100 to 145 Pins

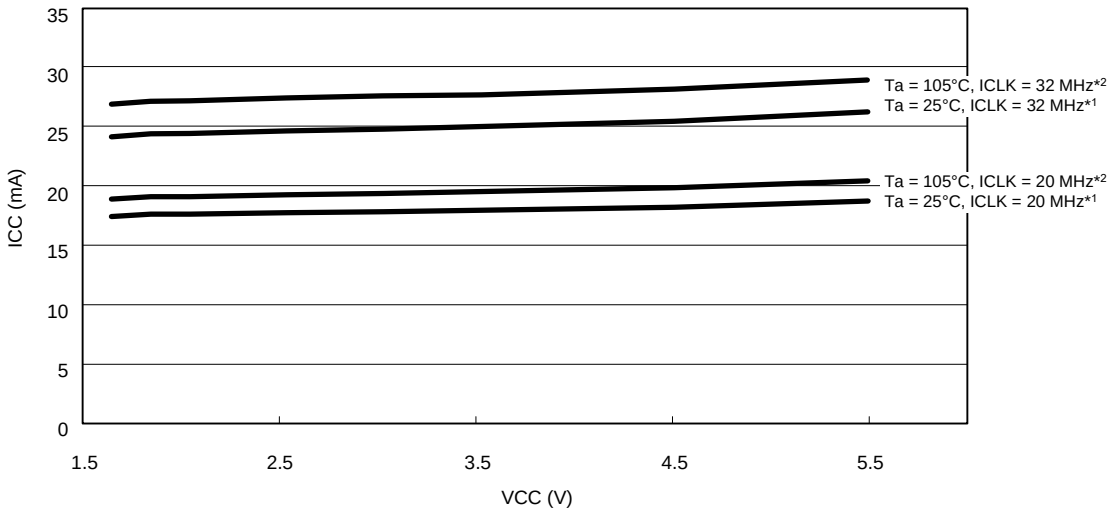

Note 1. All peripheral operation is normal. This does not include BGO operation.
Average value of the tested middle samples during product evaluation.
Note 2. All peripheral operation is maximum. This does not include BGO operation.
Average value of the tested upper-limit samples during product evaluation.

Figure 5.27 Voltage Dependency in Middle-Speed Operating Modes 1A and 1B (Reference Data) for Chip Version B with 768 Kbytes/1 Mbyte of Flash Memory and 100 to 145 Pins

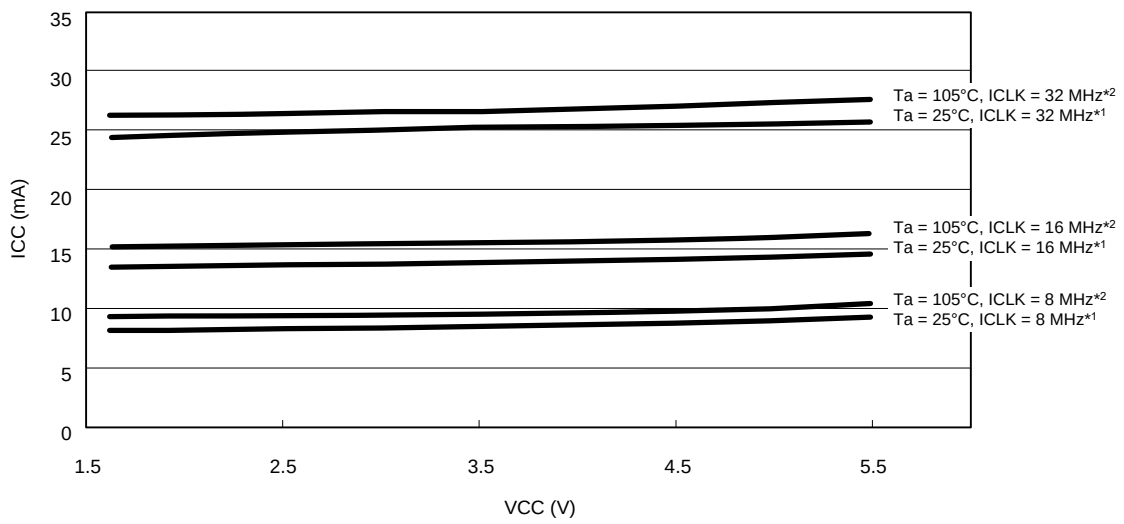

Note 1. All peripheral operation is normal. This does not include BGO operation.
Average value of the tested middle samples during product evaluation
Note 2. All peripheral operation is maximum. This does not include BGO operation.
Average value of the tested upper-limit samples during product evaluation.

Figure 5.28 Voltage Dependency in Middle-Speed Operating Modes 2A and 2B (Reference Data) for Chip Version B with 768 Kbytes/1 Mbyte of Flash Memory and 100 to 145 Pins

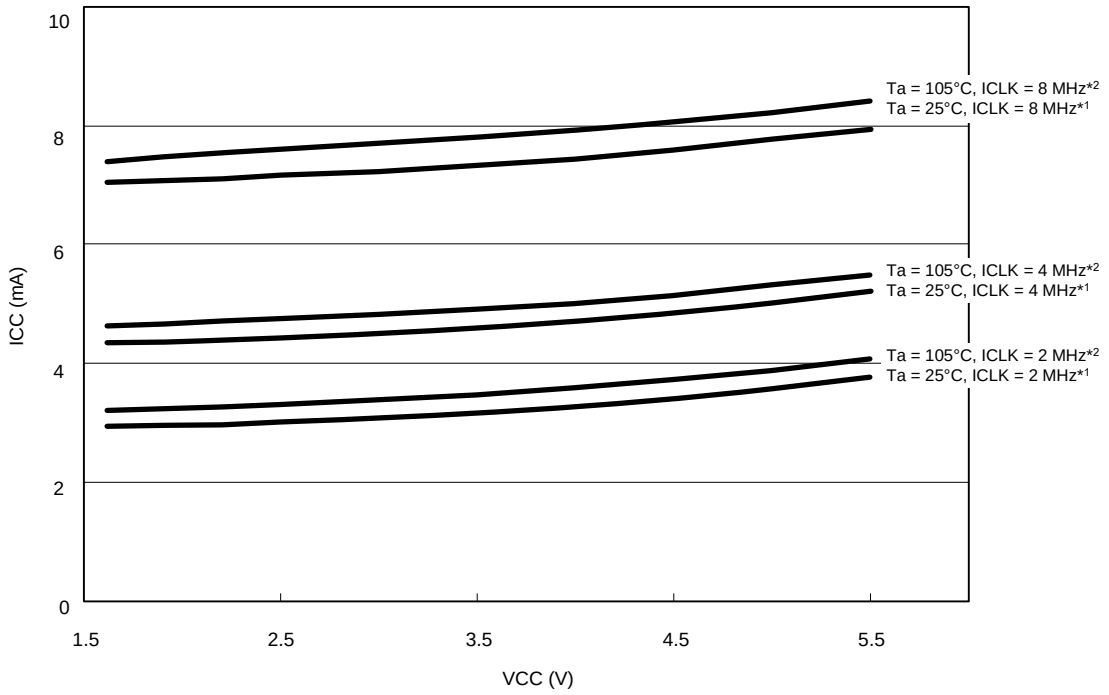

Note 1. All peripheral operation is normal.
Average value of the tested middle samples during product evaluation.
Note 2. All peripheral operation is maximum.
Average value of the tested upper-limit samples during product evaluation.

Figure 5.29 Voltage Dependency in Low-Speed Operating Mode 1 (Reference Data) for Chip Version B with 768 Kbytes/1 Mbyte of Flash Memory and 100 to 145 Pins

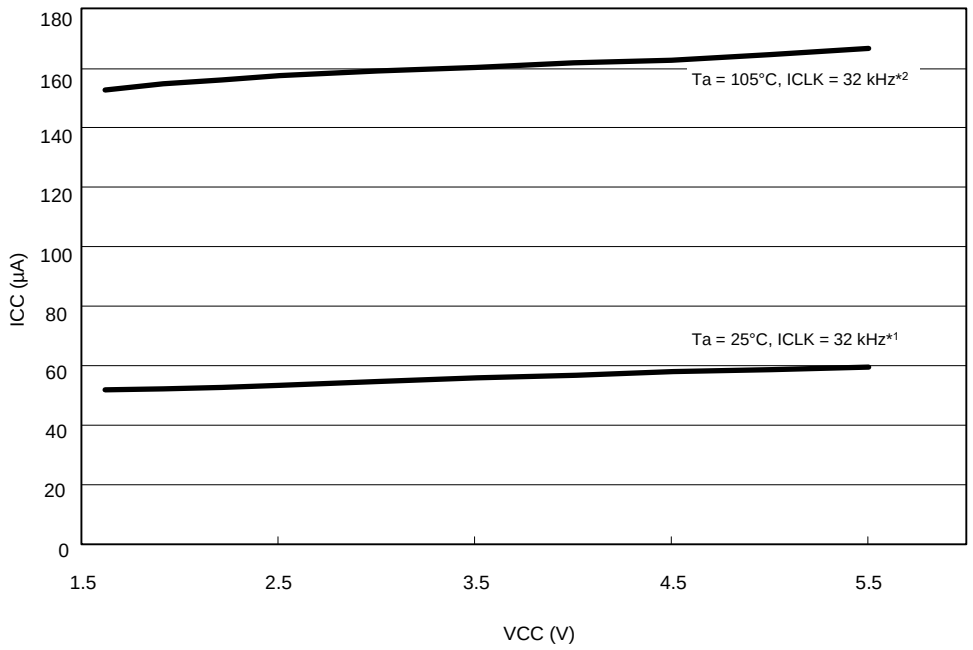

Note 1. All peripheral operation is normal.
Average value of the tested middle samples during product evaluation.
Note 2. All peripheral operation is maximum.
Average value of the tested upper-limit samples during product evaluation.

Figure 5.30 Voltage Dependency in Low-Speed Operating Mode 2 (Reference Data) for Chip Version B with 768 Kbytes/1 Mbyte of Flash Memory and 100 to 145 Pins

[Chip version B with 768 Kbytes/1 Mbyte of flash memory and 100 to 145 pins]

Table 5.17 DC Characteristics (16)

Conditions: VCC = AVCC0 = 1.62 to 5.5 V, VSS = AVSS0 = 0 V, T_a = –40 to +105°C

Item				Symbol	Typ.*3	Max.	Unit	Test Conditions
Supply current*1	Software standby mode*2	Flash memory power supplied, HOCO power supplied, POR low power consumption function disabled (SOFTCUT[2:0] bits = 000b)	T_a = 25°C	I_{CC}	10	34	μA	
			T_a = 55°C		13	87		
			T_a = 85°C		21	201		
			T_a = 105°C		40	352		
		Flash memory power supplied, HOCO power not supplied, POR low power consumption function enabled (SOFTCUT[2:0] bits = 110b)	T_a = 25°C		1.8	24		
			T_a = 55°C		3.3	70		
			T_a = 85°C		10	168		
			T_a = 105°C		25	302		
	Deep software standby mode*2	Flash memory power not supplied, HOCO power not supplied, POR low power consumption function enabled (DEEPCUT1 bit = 1)	T_a = 25°C		0.4	0.8		
			T_a = 55°C		0.5	1.0		
			T_a = 85°C		0.7	2.5		
			T_a = 105°C		1.4	6.3		
	Increments produced by running voltage detection circuits and disabling the POR low power consumption function				1.4	—		
	Increment for RTC operation (low CL)				0.8	—		
	Increment for RTC operation (standard CL)				2.0	—		

Note 1. Supply current values are with all output pins unloaded and all input pull-up MOSs in the off state.
Note 2. The IWDT and LVD are stopped.
Note 3. VCC = 3.3 V.

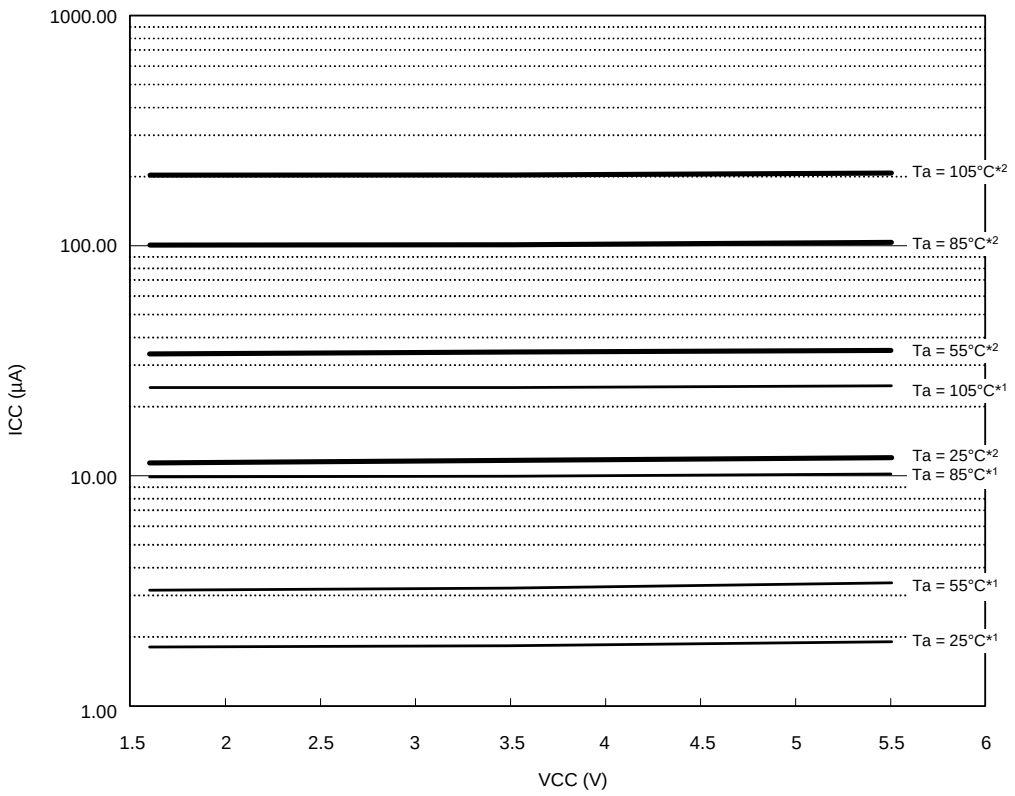

Note 1. Average value of the tested middle samples during product evaluation.
Note 2. Average value of the tested upper-limit samples during product evaluation.

Figure 5.31 Voltage Dependency in Software Standby Mode (SOFTCUT[2:0] Bits = 110b) (Reference Data) for Chip Version B with 768 Kbytes/1 Mbyte of Flash Memory and 100 to 145 Pins

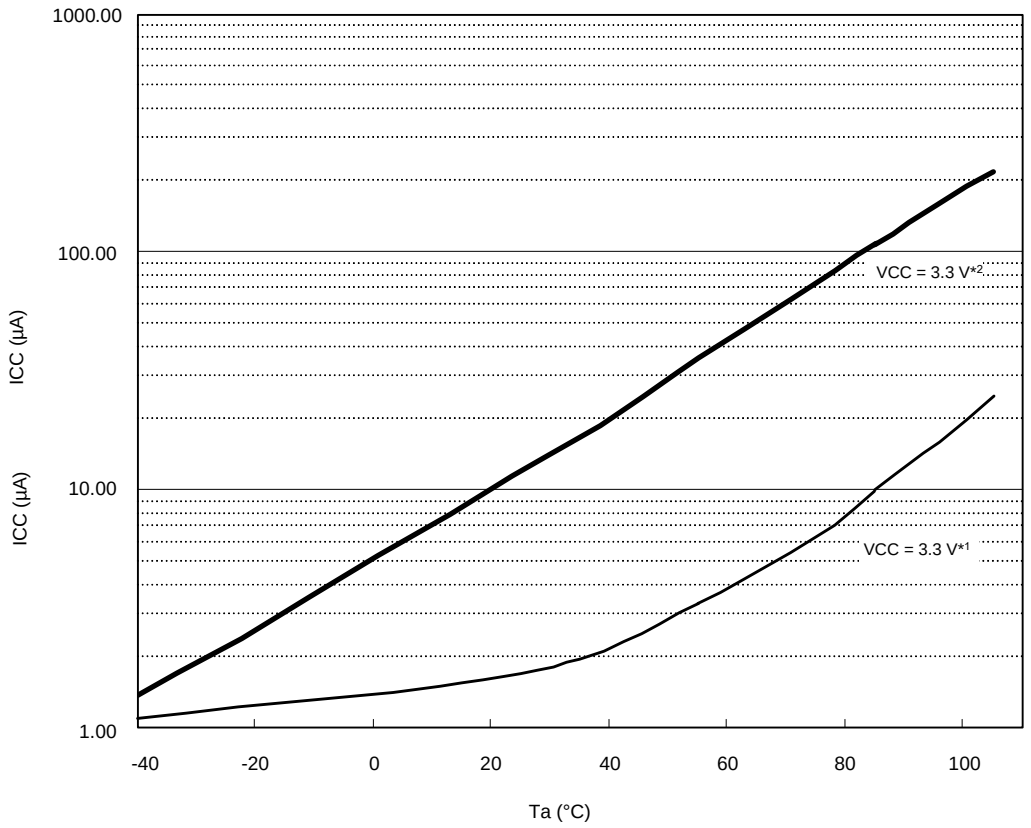

Note 1. Average value of the tested middle samples during product evaluation.
Note 2. Average value of the tested upper-limit samples during product evaluation.

Figure 5.32 Temperature Dependency in Software Standby Mode (SOFTCUT[2:0] Bits = 110b) (Reference Data) for Chip Version B with 768 Kbytes/1 Mbyte of Flash Memory and 100 to 145 Pins

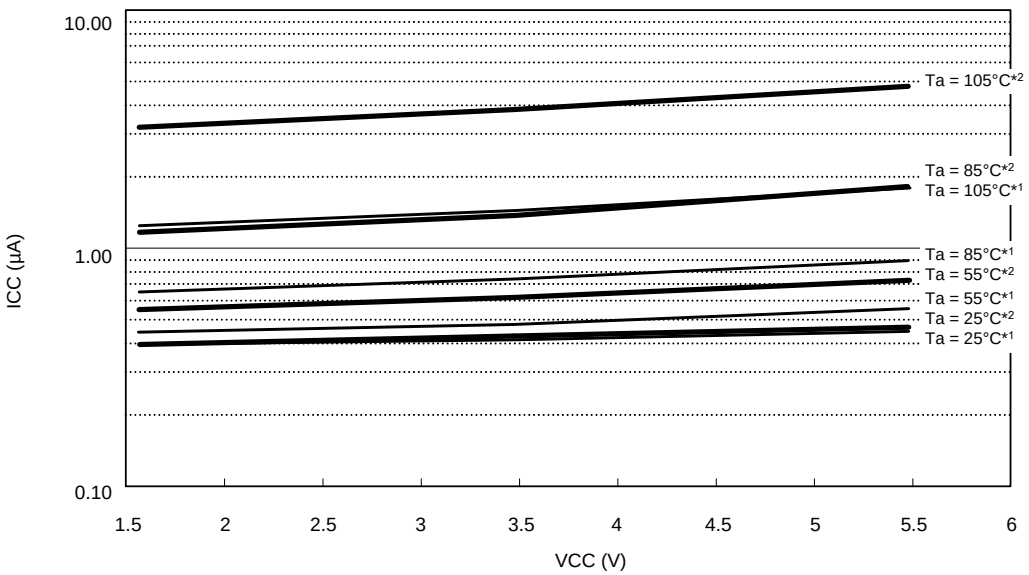

Note 1. Average value of the tested middle samples during product evaluation.
Note 2. Average value of the tested upper-limit samples during product evaluation.

Figure 5.33 Voltage Dependency in Deep Software Standby Mode (DEEPCUT1 Bit = 1) (Reference Data) for Chip Version B with 768 Kbytes/1 Mbyte of Flash Memory and 100 to 145 Pins

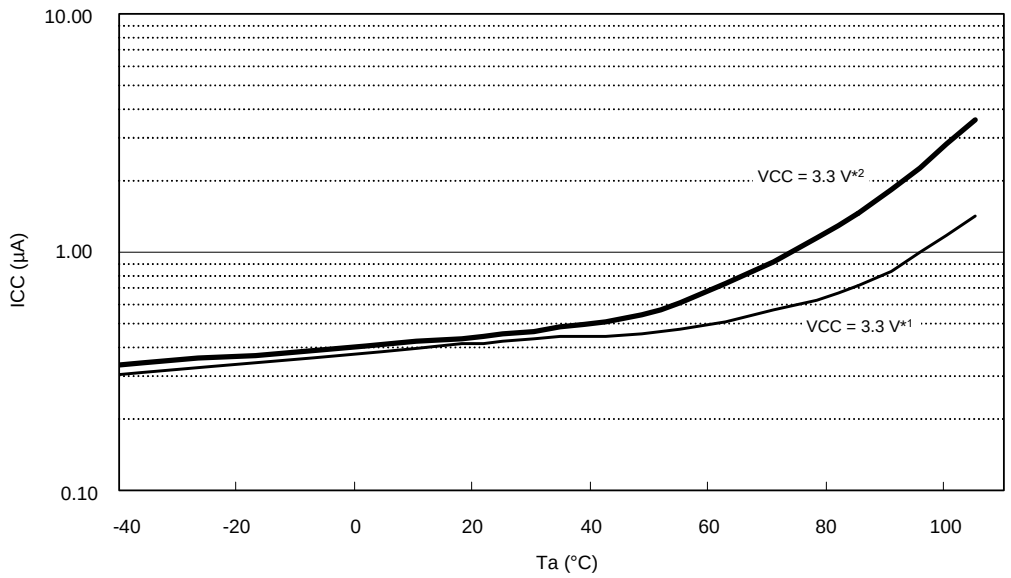

Note 1. Average value of the tested middle samples during product evaluation.
Note 2. Average value of the tested upper-limit samples during product evaluation.

Figure 5.34 Temperature Dependency in Deep Software Standby Mode (DEEPCUT1 Bit = 1) (Reference Data) for Chip Version B with 768 Kbytes/1 Mbyte of Flash Memory and 100 to 145 Pins

[Chip version B with 512 Kbytes or less of flash memory and 144 and 145 pins]

Table 5.18 DC Characteristics (17)

Conditions: VCC = AVCC0 = 2.7 to 5.5 V, VSS = AVSS0 = VREFL = VREFL0 = 0 V, T_a = –40 to +105°C

Item					Symbol	Typ.	Max.	Unit	Test Conditions
Supply current*1	High-speed operating mode	Normal operating mode	No peripheral operation*2	ICLK = 50 MHz	I_{CC}	7.2	—	mA	
			All peripheral operation: Normal*3	ICLK = 50 MHz		25.9	—		
			All peripheral operation: Max.*3	ICLK = 50 MHz		—	45		
		Sleep mode	No peripheral operation	ICLK = 50 MHz		4.3	—		
			All peripheral operation: Normal	ICLK = 50 MHz		13	—		
		All-module clock stop mode				3.7	—		
		Increase during BGO operation*4				21	—		

Note 1. Supply current values do not include output charge/discharge current from all pins. The values apply when internal pull-up MOSs are in the off state.

Note 2. Clock supply to the peripheral functions is stopped. This does not include BGO operation. The clock source is PLL and the VCO oscillation frequency is 100 MHz. BCLK, FCLK, and PCLK are set to divided by 64.

Note 3. Clocks are supplied to the peripheral functions. This does not include BGO operation. The clock source is PLL and the VCO oscillation frequency is 100 MHz. BCLK, FCLK, and PCLK are ICLK divided by 2.

Note 4. This is the increase if data is programmed to or erasing from the ROM or E2 DataFlash during program execution.

[Chip version B with 512 Kbytes or less of flash memory and 144 and 145 pins]

Table 5.19 DC Characteristics (18)

Conditions: VCC = AVCC0 = 1.62 to 5.5 V, VSS = AVSS0 = VREFL = VREFL0 = 0 V, T_a = –40 to +105°C

Item					Symbol	Typ.	Max.	Unit	Test Conditions
Supply current*1	Middle-speed operating modes 1A and 1B	Normal operating mode	No peripheral operation	ICLK = 32 MHz*2	I_{CC}	5.3	—	mA	
				ICLK = 20 MHz*3		4.6	—		
			All peripheral operation: Normal	ICLK = 32 MHz*4		22.3	—		
				ICLK = 20 MHz*5		15.6	—		
			All peripheral operation: Max.	ICLK = 32 MHz*4		—	35		
				ICLK = 20 MHz*5		—	—		
		Sleep mode	No peripheral operation	ICLK = 32 MHz		3.4	—		
				ICLK = 20 MHz		3.3	—		
			All peripheral operation: Normal	ICLK = 32 MHz		12.8	—		
				ICLK = 20 MHz		9.8	—		
		All-module clock stop mode		ICLK = 32 MHz		3	—		
				ICLK = 20 MHz		3	—		
		Increase during BGO operation*6	Middle-speed operating mode 1A			21	—		
			Middle-speed operating mode 1B			19	—		
	Middle-speed operating modes 2A and 2B	Normal operating mode	No peripheral operation*2	ICLK = 32 MHz		4.7	—		
				ICLK = 16 MHz		3.4	—		
				ICLK = 8 MHz		2.7	—		
			All peripheral operation: Normal*4	ICLK = 32 MHz*3		21.7	—		
				ICLK = 16 MHz*3		12.3	—		
				ICLK = 8 MHz		7.6	—		
			All peripheral operation: Max.*4	ICLK = 32 MHz*3		—	34		
				ICLK = 16 MHz*3		—	—		
				ICLK = 8 MHz		—	—		
		Sleep mode	No peripheral operation	ICLK = 32 MHz		2.9	—		
				ICLK = 16 MHz		2.5	—		
				ICLK = 8 MHz		2.2	—		
			All peripheral operation: Normal	ICLK = 32 MHz		12.3	—		
				ICLK = 16 MHz		7.8	—		
				ICLK = 8 MHz		5.6	—		
		All-module clock stop mode		ICLK = 32 MHz		2.5	—		
				ICLK = 16 MHz		2.2	—		
				ICLK = 8 MHz		2.1	—		
		Increase during BGO operation*6	Middle-speed operating mode 1A			21	—		
			Middle-speed operating mode 1B			19	—		

Item					Symbol	Typ.	Max.	Unit	Test Conditions
Supply current*1	Low-speed operating mode 1	Normal operating mode	No peripheral operation*7	ICLK = 8 MHz	I_{CC}	2.0	—	mA	
				ICLK = 4 MHz		1.6	—		
				ICLK = 2 MHz		1.5	—		
			All peripheral operation: Normal*8	ICLK = 8 MHz		6.4	—		
				ICLK = 4 MHz		4.0	—		
				ICLK = 2 MHz		2.8	—		
			All peripheral operation: Max.*8	ICLK = 8 MHz		—	12		
				ICLK = 4 MHz		—	—		
				ICLK = 2 MHz		—	—		
		Sleep mode	No peripheral operation	ICLK = 8 MHz		1.5	—		
				ICLK = 4 MHz		1.4	—		
				ICLK = 2 MHz		1.3	—		
			All peripheral operation: Normal	ICLK = 8 MHz		3.9	—		
				ICLK = 4 MHz		2.8	—		
				ICLK = 2 MHz		2.2	—		
		All-module clock stop mode		ICLK = 8 MHz		1.4	—		
				ICLK = 4 MHz		1.3	—		
				ICLK = 2 MHz		1.2	—		
	Low-speed operating mode 2	Normal operating mode	No peripheral operation*9	ICLK = 32 kHz		0.021	—		
			All peripheral operation: Normal*10	ICLK = 32 kHz		0.06	—		
			All peripheral operation: Max.*10	ICLK = 32 kHz		—	3*11		
		Sleep mode	No peripheral operation	ICLK = 32 kHz		0.017	—		
			All peripheral operation: Normal	ICLK = 32 kHz		0.035	—		
		All-module clock stop mode				0.016	—		

Note 1. Supply current values do not include output charge/discharge current from all pins. The values apply when internal pull-up MOSs are in the off state.
Note 2. Clock supply to the peripheral functions is stopped. This does not include BGO operation. The clock source is PLL and the VCO oscillation frequency is 64 MHz. BCLK, FCLK, and PCLK are set to divided by 64.
Note 3. Clock supply to the peripheral functions is stopped. This does not include BGO operation. The clock source is HOCO and the oscillation frequency is 40 MHz. BCLK, FCLK, and PCLK are set to divided by 64.
Note 4. Clocks are supplied to the peripheral functions. This does not include BGO operation. The clock source is PLL and the VCO oscillation frequency is 64 MHz. BCLK, FCLK, and PCLK are ICLK divided by 1.
Note 5. Clocks are supplied to the peripheral functions. This does not include BGO operation. The clock source is HOCO and the oscillation frequency is 40 MHz. BCLK, FCLK, and PCLK are ICLK divided by 1.
Note 6. This is the increase if data is programmed to or erasing from the ROM or E2 DataFlash during program execution.
Note 7. Clock supply to the peripheral functions is stopped. This does not include BGO operation. The clock source is HOCO and the oscillation frequency is 32 MHz. BCLK, FCLK, and PCLK are set to divided by 64.
Note 8. Clocks are supplied to the peripheral functions. This does not include BGO operation. The clock source is HOCO and the oscillation frequency is 32 MHz. BCLK, FCLK, and PCLK are ICLK divided by 1.
Note 9. Clock supply to the peripheral functions is stopped. This does not include BGO operation. The clock source is the sub oscillation circuit. BCLK, FCLK, and PCLK are set to divided by 64.
Note 10. Clocks are supplied to the peripheral functions. This does not include BGO operation. The clock source is the sub oscillation circuit. BCLK, FCLK, and PCLK are ICLK divided by 1.
Note 11. Value when the main clock continues oscillating at 12.5 MHz.

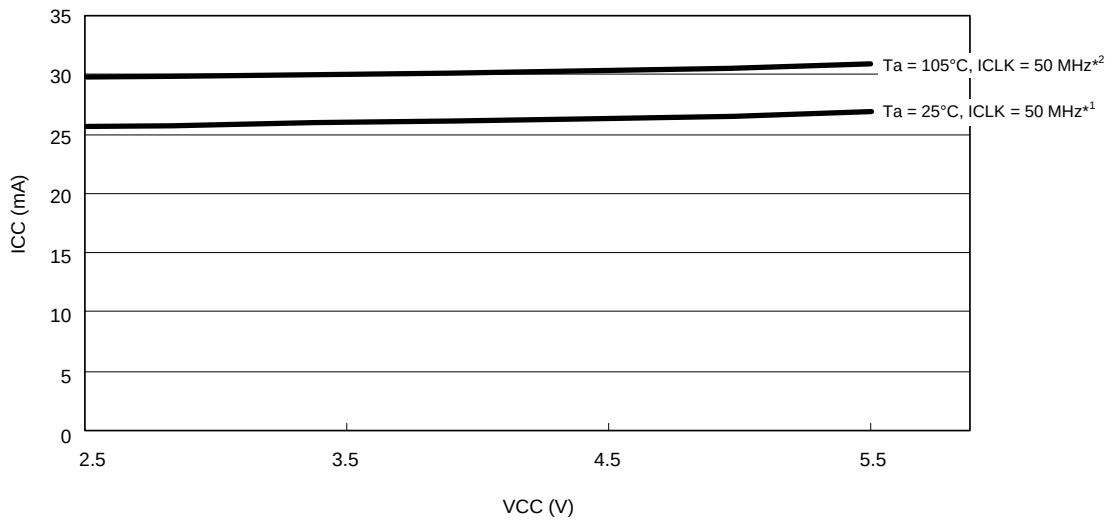

Note 1. All peripheral operation is normal. This does not include BGO operation.
Average value of the tested middle samples during product evaluation.
Note 2. All peripheral operation is maximum. This does not include BGO operation.
Average value of the tested upper-limit samples during product evaluation.

Figure 5.35 Voltage Dependency in High-Speed Operating Mode (Reference Data) for Chip Version B with 512 Kbytes or Less of Flash Memory and 144 and 145 Pins

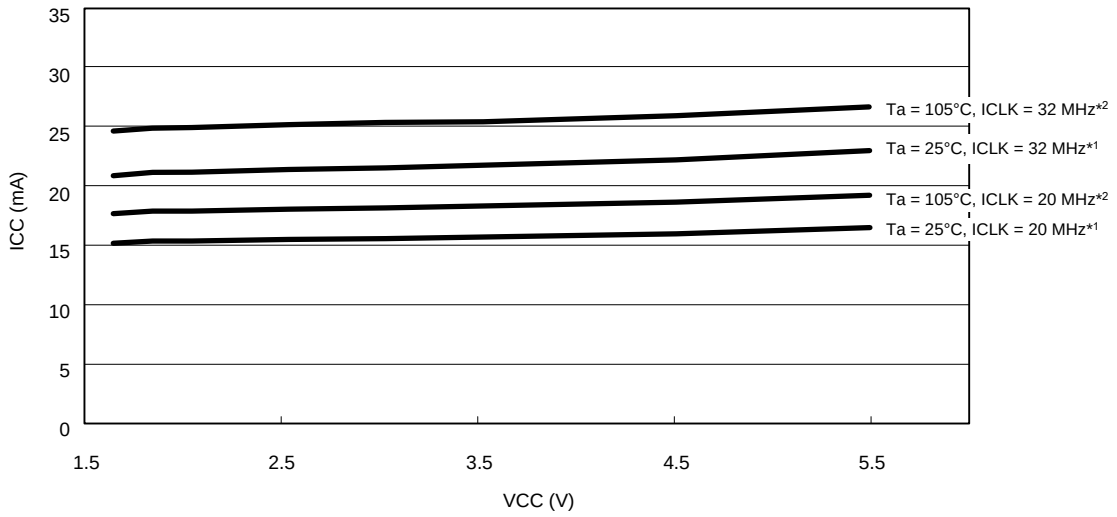

Note 1. All peripheral operation is normal. This does not include BGO operation.
Average value of the tested middle samples during product evaluation.
Note 2. All peripheral operation is maximum. This does not include BGO operation.
Average value of the tested upper-limit samples during product evaluation.

Figure 5.36 Voltage Dependency in Middle-Speed Operating Modes 1A and 1B (Reference Data) for Chip Version B with 512 Kbytes or Less of Flash Memory and 144 and 145 Pins

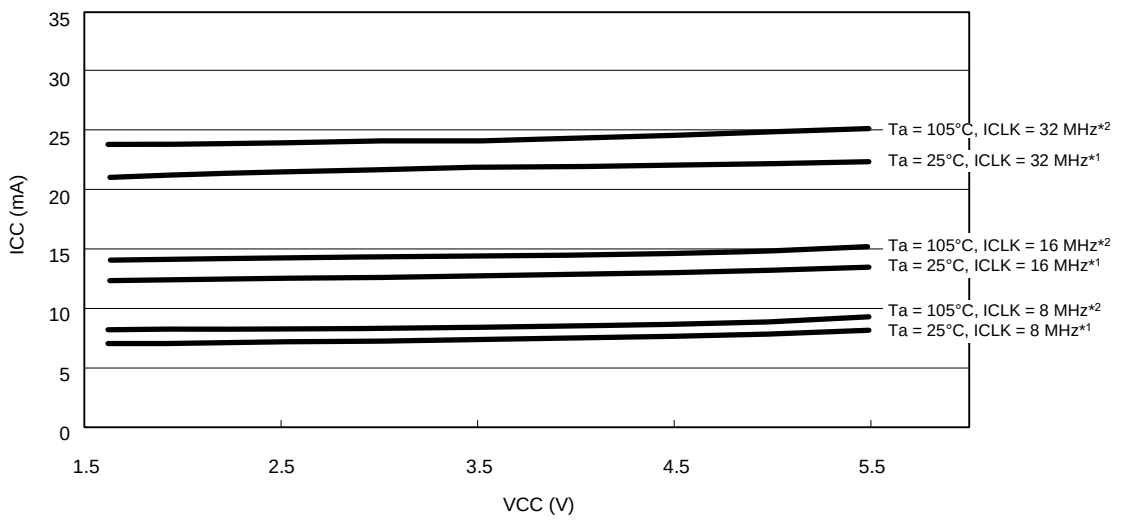

Note 1. All peripheral operation is normal. This does not include BGO operation.
Average value of the tested middle samples during product evaluation
Note 2. All peripheral operation is maximum. This does not include BGO operation.
Average value of the tested upper-limit samples during product evaluation.

Figure 5.37 Voltage Dependency in Middle-Speed Operating Modes 2A and 2B (Reference Data) for Chip Version B with 512 Kbytes or Less of Flash Memory and 144 and 145 Pins

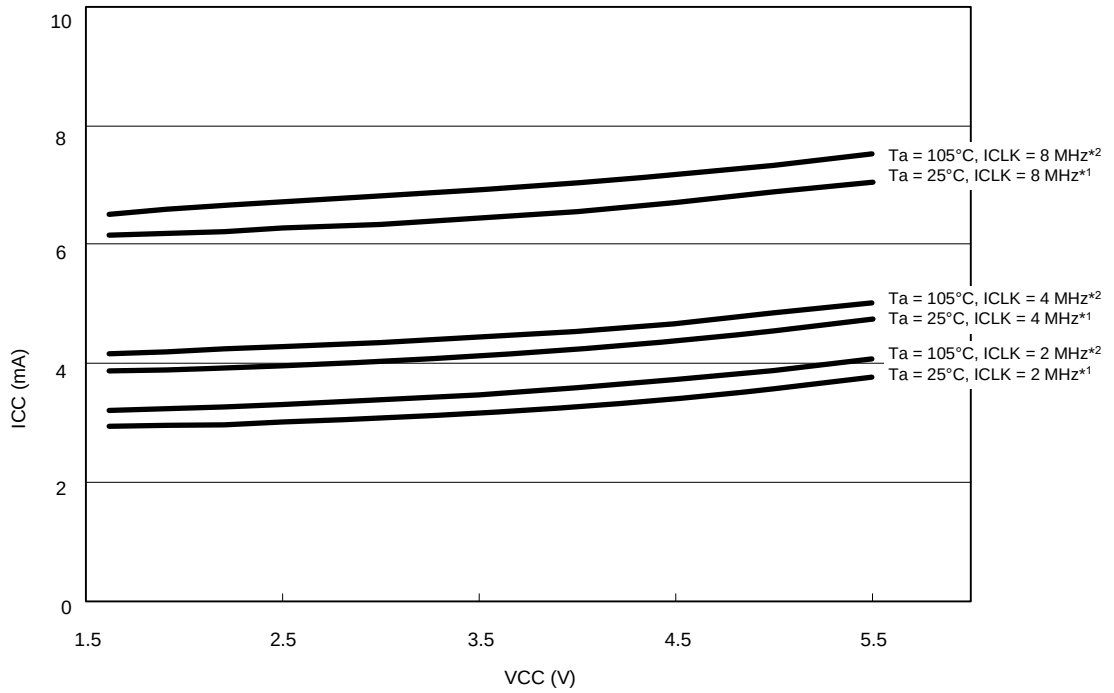

Note 1. All peripheral operation is normal.
Average value of the tested middle samples during product evaluation.
Note 2. All peripheral operation is maximum.
Average value of the tested upper-limit samples during product evaluation.

Figure 5.38 Voltage Dependency in Low-Speed Operating Mode 1 (Reference Data) for Chip Version B with 512 Kbytes or Less of Flash Memory and 144 and 145 Pins

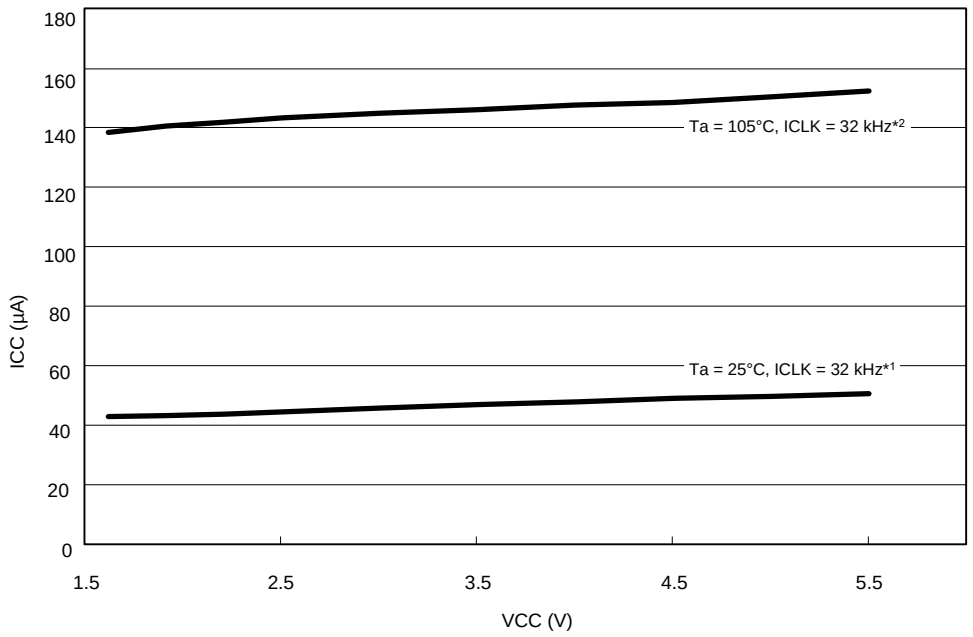

Note 1. All peripheral operation is normal.
Average value of the tested middle samples during product evaluation.
Note 2. All peripheral operation is maximum.
Average value of the tested upper-limit samples during product evaluation.

Figure 5.39 Voltage Dependency in Low-Speed Operating Mode 2 (Reference Data) for Chip Version B with 512 Kbytes or Less of Flash Memory and 144 and 145 Pins

[Chip version B with 512 Kbytes or less of flash memory and 144 and 145 pins]

Table 5.20 DC Characteristics (19)

Conditions: VCC = AVCC0 = 1.62 to 5.5 V, VSS = AVSS0 = 0 V, T_a = –40 to +105°C

Item				Symbol	Typ.*3	Max.	Unit	Test Conditions
Supply current*1	Software standby mode*2	Flash memory power supplied, HOCO power supplied, POR low power consumption function disabled (SOFTCUT[2:0] bits = 000b)	T_a = 25°C	I_{CC}	10	18	μA	
			T_a = 55°C		13	52		
			T_a = 85°C		20	101		
			T_a = 105°C		34	173		
		Flash memory power supplied, HOCO power not supplied, POR low power consumption function enabled (SOFTCUT[2:0] bits = 110b)	T_a = 25°C		1.8	7.7		
			T_a = 55°C		3.3	30		
			T_a = 85°C		9.2	75		
			T_a = 105°C		20	139		
	Deep software standby mode*2	Flash memory power not supplied, HOCO power not supplied, POR low power consumption function enabled (DEEPCUT1 bit = 1)	T_a = 25°C		0.4	0.8		
			T_a = 55°C		0.5	1.0		
			T_a = 85°C		0.7	2.5		
			T_a = 105°C		1.4	6.3		
	Increments produced by running voltage detection circuits and disabling the POR low power consumption function				1.4	—		
	Increment for RTC operation (low CL)				0.8	—		
	Increment for RTC operation (standard CL)				2.0	—		

Note 1. Supply current values are with all output pins unloaded and all input pull-up MOSs in the off state.
Note 2. The IWDT and LVD are stopped.
Note 3. VCC = 3.3 V.

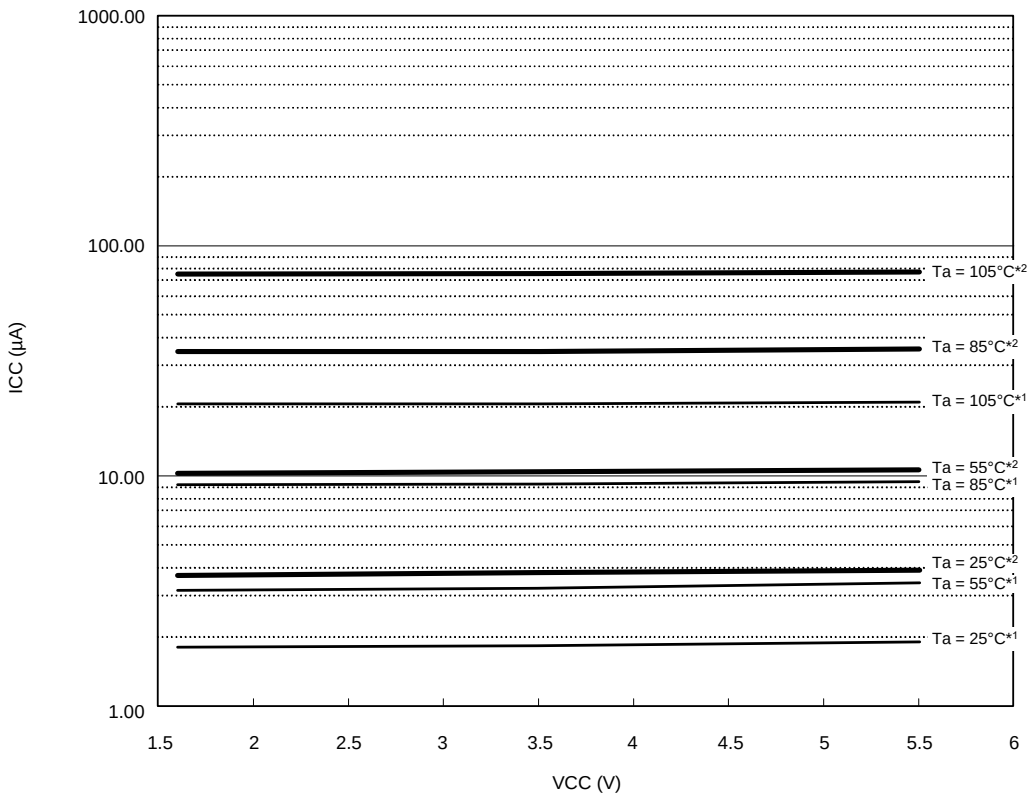

Note 1. Average value of the tested middle samples during product evaluation.
Note 2. Average value of the tested upper-limit samples during product evaluation.

Figure 5.40 Voltage Dependency in Software Standby Mode (SOFTCUT[2:0] Bits = 110b) (Reference Data) for Chip Version B with 512 Kbytes or Less of Flash Memory and 144 and 145 Pins

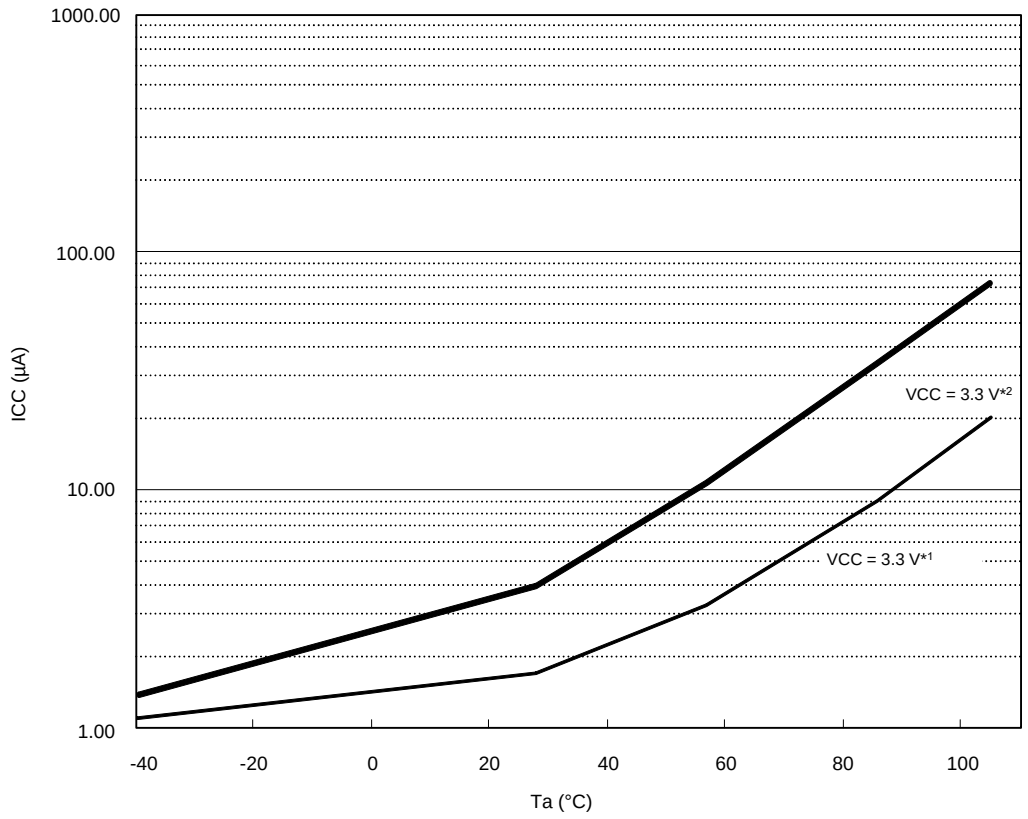

Note 1. Average value of the tested middle samples during product evaluation.
Note 2. Average value of the tested upper-limit samples during product evaluation.

Figure 5.41 Temperature Dependency in Software Standby Mode (SOFTCUT[2:0] Bits = 110b) (Reference Data) for Chip Version B with 512 Kbytes or Less of Flash Memory and 144 and 145 Pins

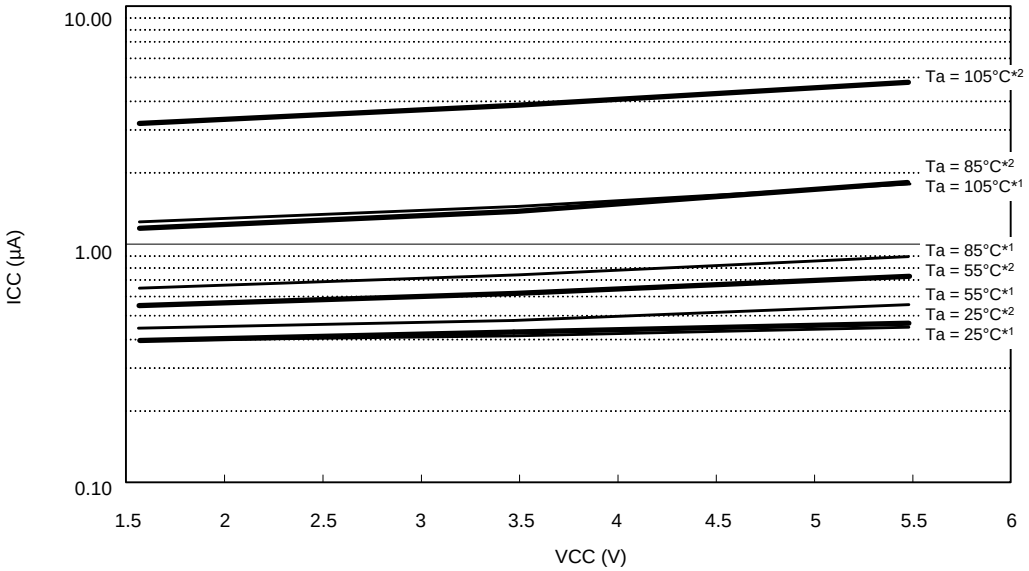

Note 1. Average value of the tested middle samples during product evaluation.
Note 2. Average value of the tested upper-limit samples during product evaluation.

Figure 5.42 Voltage Dependency in Deep Software Standby Mode (DEEPCUT1 Bit = 1) (Reference Data) for Chip Version B with 512 Kbytes or Less of Flash Memory and 144 and 145 Pins

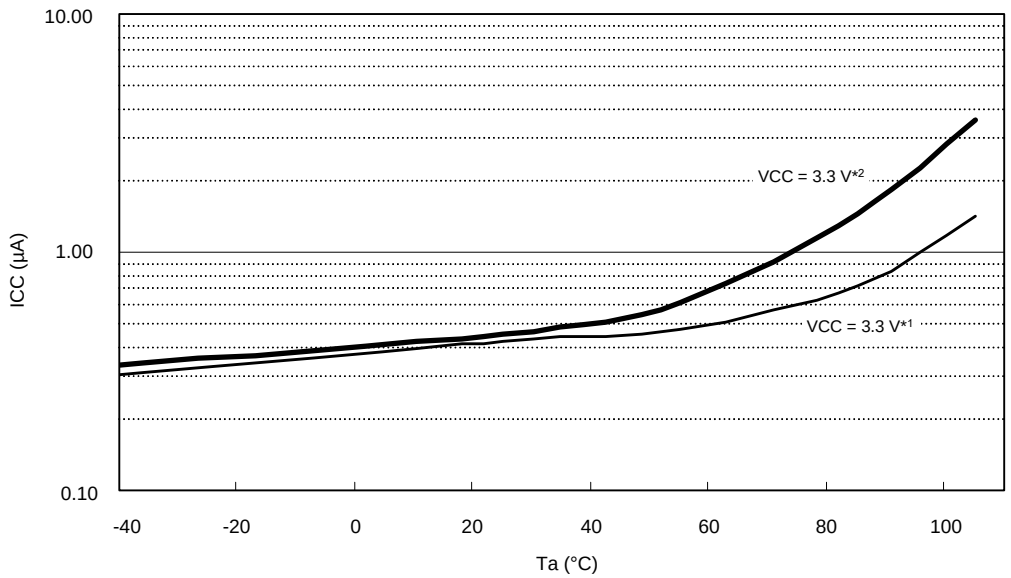

Note 1. Average value of the tested middle samples during product evaluation.
Note 2. Average value of the tested upper-limit samples during product evaluation.

Figure 5.43 Temperature Dependency in Deep Software Standby Mode (DEEPCUT1 Bit = 1) (Reference Data) for Chip Version B with 512 Kbytes or Less of Flash Memory and 144 and 145 Pins

Table 5.21 DC Characteristics (20)

Conditions: VCC = AVCC0 = 1.62 to 5.5 V, VSS = AVSS0 = VREFL = VREFL0 = 0 V, T_a = –40 to +105°C

Item	Symbol	Typ.	Max.	Unit	Test Conditions
Permissible total consumption power*1	Pd	—	350	mW	Ta = –40 to 85°C
		—	150		85°C < Ta ≤ 105°C

Note: • Please contact Renesas Electronics sales office for derating of operation under Ta = +85°C to +105°C. Derating is the systematic reduction of load for the sake of improved reliability.

Note 1. Total power dissipated by the entire chip (including output currents)

Table 5.22 DC Characteristics (21)

Conditions: VCC = AVCC0 = 1.62 to 5.5 V, VREFH = 1.8 to AVCC0, VREFH0 = 1.62 to AVCC0, VSS = AVSS0 = VREFL = VREFL0 = 0 V, T_a = –40 to +105°C

Item		Symbol	Min.	Typ.	Max.	Unit	Test Conditions
Analog power supply current	During A/D conversion	I_{AVCC0}	—	1.0	3.2	mA	
	Temperature sensor operating, waiting for A/D conversion		—	60	200	μA	
	During D/A conversion (per channel)	I_{VREFH}*1	—	0.25	0.75	mA	
	Waiting for A/D, D/A conversion (all units)*2	—	—	0.2	5.0	μA	
Reference power supply current	During A/D conversion	I_{VREFH0}	—	0.1	0.2	mA	
	Waiting for A/D conversion		—	0.2	0.4	μA	

Note: • The values for A/D conversion apply when the sample and hold circuit is not in use.

Note 1. The reference power supply current is included in the power supply current value for D/A conversion.

Note 2. The value is the total value of I_{AVCC0} and I_{VREFH}.

Table 5.23 DC Characteristics (22)

Conditions: VCC = AVCC0, VSS = AVSS0 = VREFL = VREFL0 = 0 V, T_a = –40 to +105°C

Item	Symbol	Min.	Typ.	Max.	Unit	Test Conditions
RAM standby voltage	V_{RAM}	1.62	—	—	V	

Table 5.24 DC Characteristics (23)

Conditions: VCC = AVCC0 = 0 to 5.5 V, VREFH = VREFH0 = 0 to AVCC0, VSS = AVSS0 = VREFL = VREFL0 = 0 V, T_a = –40 to +105°C

Item	Symbol	Min.	Typ.	Max.	Unit	Test Conditions
VCC rising gradient	SrVCC	0.02	—	20	ms/V	At cold start

Table 5.25 DC Characteristics (24)

Conditions: VCC = AVCC0 = 1.62 to 5.5 V, VSS = AVSS0 = VREFL0 = 0 V, T_a = –40 to +105°C
The ripple voltage must meet the allowable ripple frequency $f_{r(VCC)}$ within the range between the VCC upper limit (5.5 V) and lower limit (1.62 V).
When VCC change exceeds VCC ±10%, the allowable voltage change rising/falling gradient dt/dVCC must be met.

Item	Symbol	Min.	Typ.	Max.	Unit	Test Conditions
Allowable ripple frequency	$f_{r(VCC)}$	—	—	10	kHz	Figure 5.44 VCC × 0.1 < $V_{r(VCC)}$ ≤ VCC × 0.2
		—	—	1	MHz	Figure 5.44 VCC × 0.05 < $V_{r(VCC)}$ ≤ VCC × 0.1
		—	—	10	MHz	Figure 5.44 $V_{r(VCC)}$ ≤ VCC × 0.05
Allowable voltage change rising/ falling gradient	dt/dVCC	1.0	—	—	ms/V	When VCC change exceeds VCC ±10%

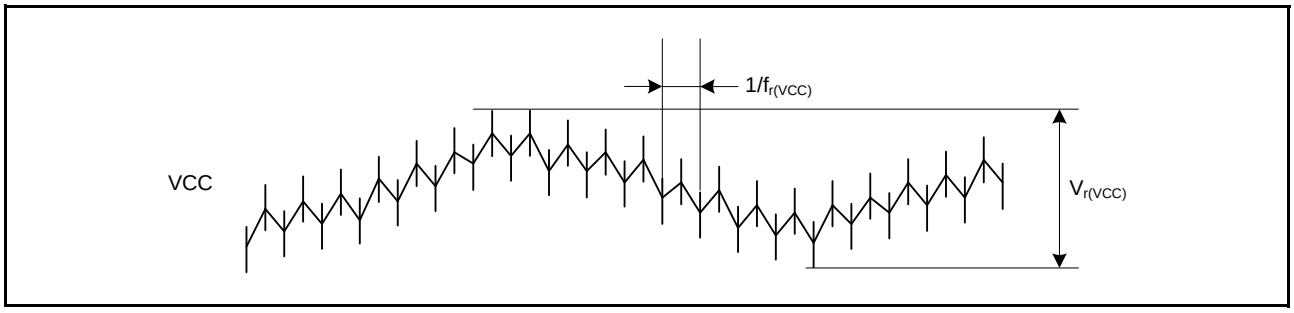

Figure 5.44 Ripple Waveform

Table 5.26 Permissible Output Currents (1)

Conditions: VCC = AVCC0 = 1.62 to 5.5 V, VSS = AVSS0 = VREFL = VREFL0 = 0 V, when total power (mW) < 1000 – 10 × Ta

Item		Symbol	Max.	Unit
Permissible output low current (average value per 1 pin)	Normal output mode	I_{OL}	4.0	mA
	High-drive output mode		8.0	
Permissible output low current (maximum value per 1 pin)	Normal output mode		4.0	mA
	High-drive output mode		8.0	
Permissible output low current (total)	Total of all output pins	ΣI_{OL}	80	mA
Permissible output high current (average value per 1 pin)	Normal output mode	I_{OH}	–4.0	mA
	High-drive output mode		–8.0	
Permissible output high current (maximum value per 1 pin)	Normal output mode		–4.0	mA
	High-drive output mode		–8.0	
Permissible output high current (total)	Total of all output pins	ΣI_{OH}	–80	mA

Table 5.27 Permissible Output Currents (2)

Conditions: VCC = AVCC0 = 1.62 to 5.5 V, VSS = AVSS0 = VREFL = VREFL0 = 0 V, when total power (mW) ≥ 1000 – 10 × Ta

Item		Symbol	Max.	Unit
Permissible output low current (average value per 1 pin)	Normal output mode	I_{OL}	2.0	mA
	High-drive output mode		4.0	
Permissible output low current (maximum value per 1 pin)	Normal output mode		2.0	mA
	High-drive output mode		4.0	
Permissible output low current (total)	Total of all output pins	ΣI_{OL}	40	mA
Permissible output high current (average value per 1 pin)	Normal output mode	I_{OH}	–2.0	mA
	High-drive output mode		–4.0	
Permissible output high current (maximum value per 1 pin)	Normal output mode		–2.0	mA
	High-drive output mode		–4.0	
Permissible output high current (total)	Total of all output pins	ΣI_{OH}	–40	mA

[Chip version A]

Table 5.28 Output Values of Voltage (1)

Conditions: VCC = AVCC0 = 1.62 to 2.7 V, VSS = AVSS0 = VREFL = VREFL0 = 0 V, T_a = –40 to +105°C

Item			Symbol	Min.	Max.	Unit	Test Conditions
Output low	All output pins (other than RIIC)	Normal output mode	V_{OL}	—	0.4	V	I_{OL} = 0.5 mA
		High-drive output mode		—	0.4		I_{OL} = 1.0 mA
Output high	All output pins	Normal output mode	V_{OH}	VCC – 0.4	—	V	I_{OH} = –0.5 mA
		High-drive output mode		VCC – 0.4	—		I_{OH} = –1.0 mA

[Chip version A]

Table 5.29 Output Values of Voltage (2)

Conditions: VCC = AVCC0 = 2.7 to 5.5 V, VSS = AVSS0 = VREFL = VREFL0 = 0 V, T_a = –40 to +105°C

Item			Symbol	Min.	Max.	Unit	Test Conditions	
							VCC = 2.7 to 4.0 V	VCC = 4.0 to 5.5 V
Output low	All output pins (other than RIIC)	Normal output mode	V_{OL}	—	1.0	V	I_{OL} = 3.0 mA	I_{OL} = 4.0 mA
		High-drive output mode		—	1.0		I_{OL} = 5.0 mA	I_{OL} = 8.0 mA
	RIIC pins			—	0.4		I_{OL} = 3.0 mA	
				—	0.6		I_{OL} = 6.0 mA	
Output high	All output pins	Normal output mode	V_{OH}	VCC – 1.0	—	V	I_{OH} = – 3.0 mA	I_{OH} = – 4.0 mA
		High-drive output mode		VCC – 1.0	—		I_{OH} = – 5.0 mA	I_{OH} = – 8.0 mA

[Chip versions B and C]

Table 5.30 Output Values of Voltage (3)

Conditions: VCC = AVCC0 = 1.62 to 2.7 V, VSS = AVSS0 = VREFL = VREFL0 = 0 V, T_a = –40 to +105°C

Item			Symbol	Min.	Max.	Unit	Test Conditions
Output low	All output pins (other than RIIC)	Normal output mode	V_{OL}	—	0.3	V	I_{OL} = 0.5 mA
		High-drive output mode		—	0.3		I_{OL} = 1.0 mA
Output high	All output pins	Normal output mode	V_{OH}	VCC – 0.3	—	V	I_{OH} = –0.5 mA
		High-drive output mode		VCC – 0.3	—		I_{OH} = –1.0 mA

[Chip versions B and C]

Table 5.31 Output Values of Voltage (4)

Conditions: VCC = AVCC0 = 2.7 to 4.0 V, VSS = AVSS0 = VREFL = VREFL0 = 0 V, T_a = –40 to +105°C

Item			Symbol	Min.	Max.	Unit	Test Conditions
Output low	All output pins (other than RIIC)	Normal output mode	V_{OL}	—	0.5	V	I_{OL} = 1.0 mA
		High-drive output mode		—	0.5		I_{OL} = 2.0 mA
	RIIC pins			—	0.4		I_{OL} = 3.0 mA
				—	0.6		I_{OL} = 6.0 mA
Output high	All output pins	Normal output mode	V_{OH}	VCC – 0.5	—	V	I_{OH} = –1.0 mA
		High-drive output mode		VCC – 0.5	—		I_{OH} = –2.0 mA

[Chip versions B and C]

Table 5.32 Output Values of Voltage (5)

Conditions: VCC = AVCC0 = 4.0 to 5.5 V, VSS = AVSS0 = VREFL = VREFL0 = 0 V, T_a = –40 to +105°C

Item			Symbol	Min.	Max.	Unit	Test Conditions
Output low	All output pins (other than RIIC)	Normal output mode	V_{OL}	—	0.8	V	I_{OL} = 2.0 mA
		High-drive output mode		—	0.8		I_{OL} = 4.0 mA
	RIIC pins			—	0.4		I_{OL} = 3.0 mA
				—	0.6		I_{OL} = 6.0 mA
Output high	All output pins	Normal output mode	V_{OH}	VCC – 0.8	—	V	I_{OH} = –2.0 mA
		High-drive output mode		VCC – 0.8	—		I_{OH} = –4.0 mA

5.2.1 Standard I/O Pin Output Characteristics (1)

Figure 5.45 to Figure 5.49 show the characteristics when normal output is selected by the drive capacity control register.

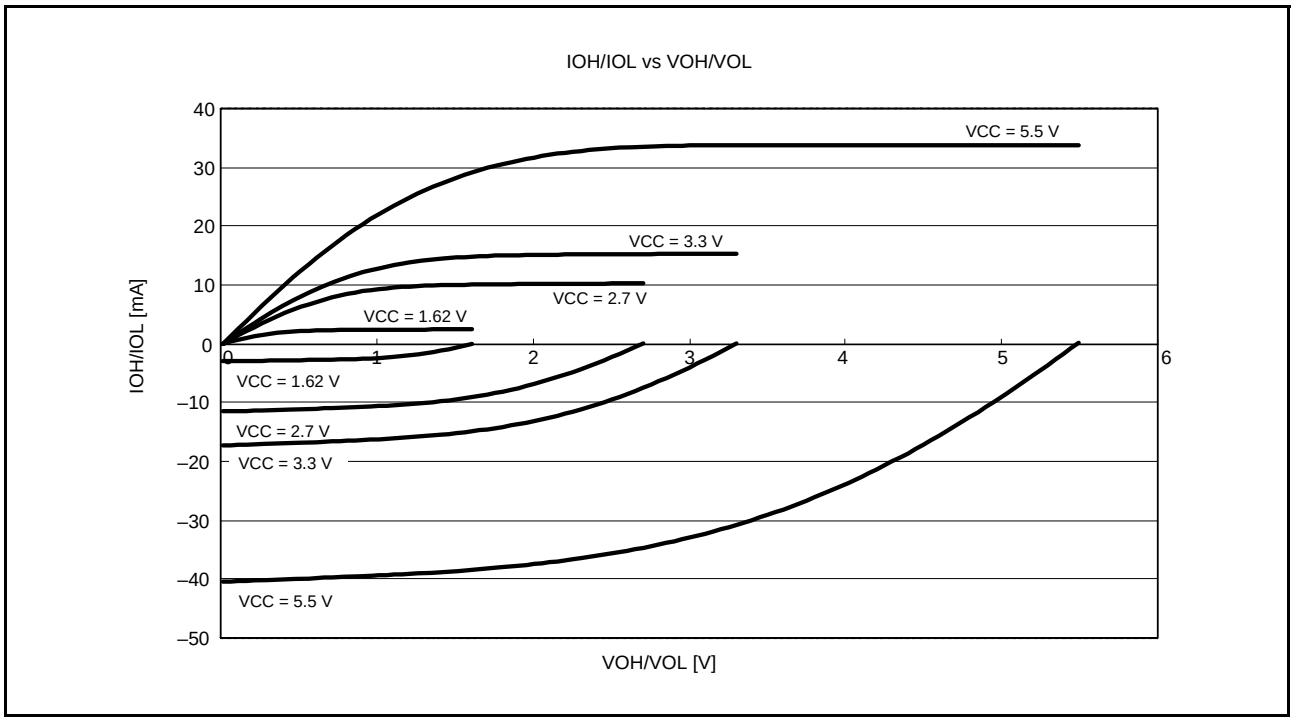

Figure 5.45 VOH/VOL and IOH/IOL Voltage Characteristics at Ta = 25°C when Normal Output is Selected (Reference Data)

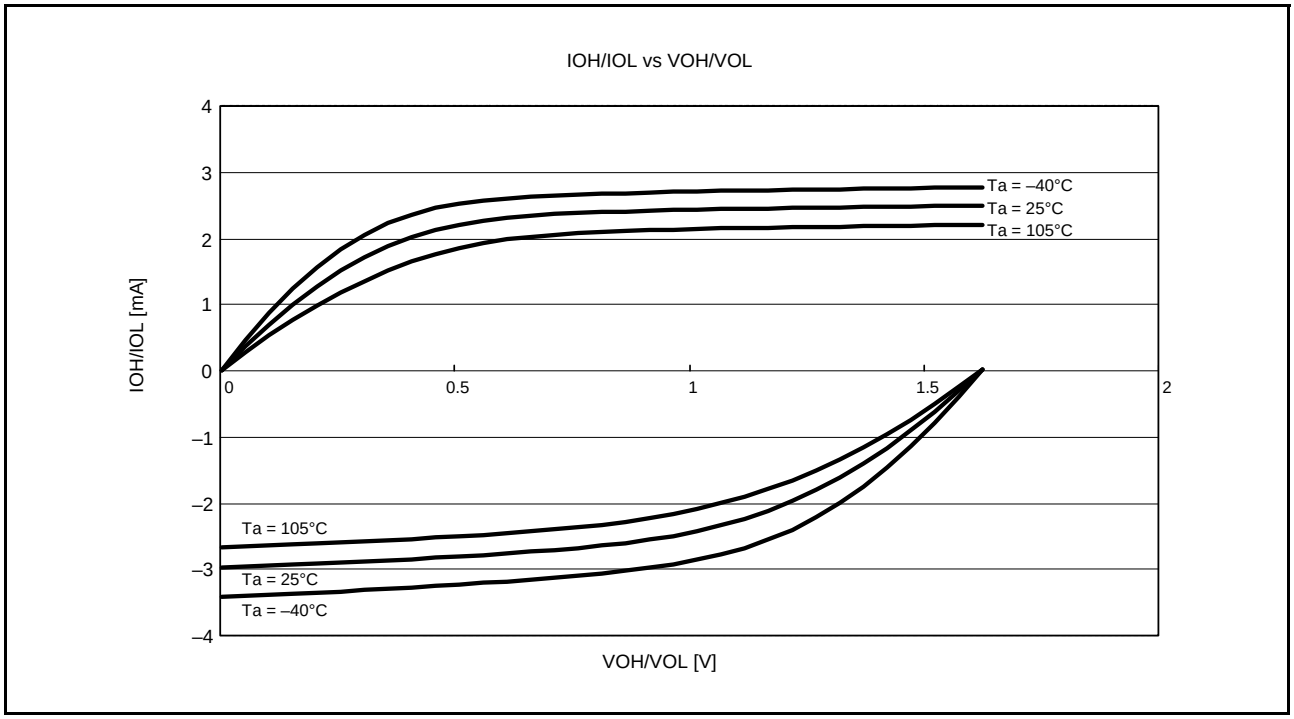

Figure 5.46 VOH/VOL and IOH/IOL Temperature Characteristics at VCC = 1.62 V when Normal Output is Selected (Reference Data)

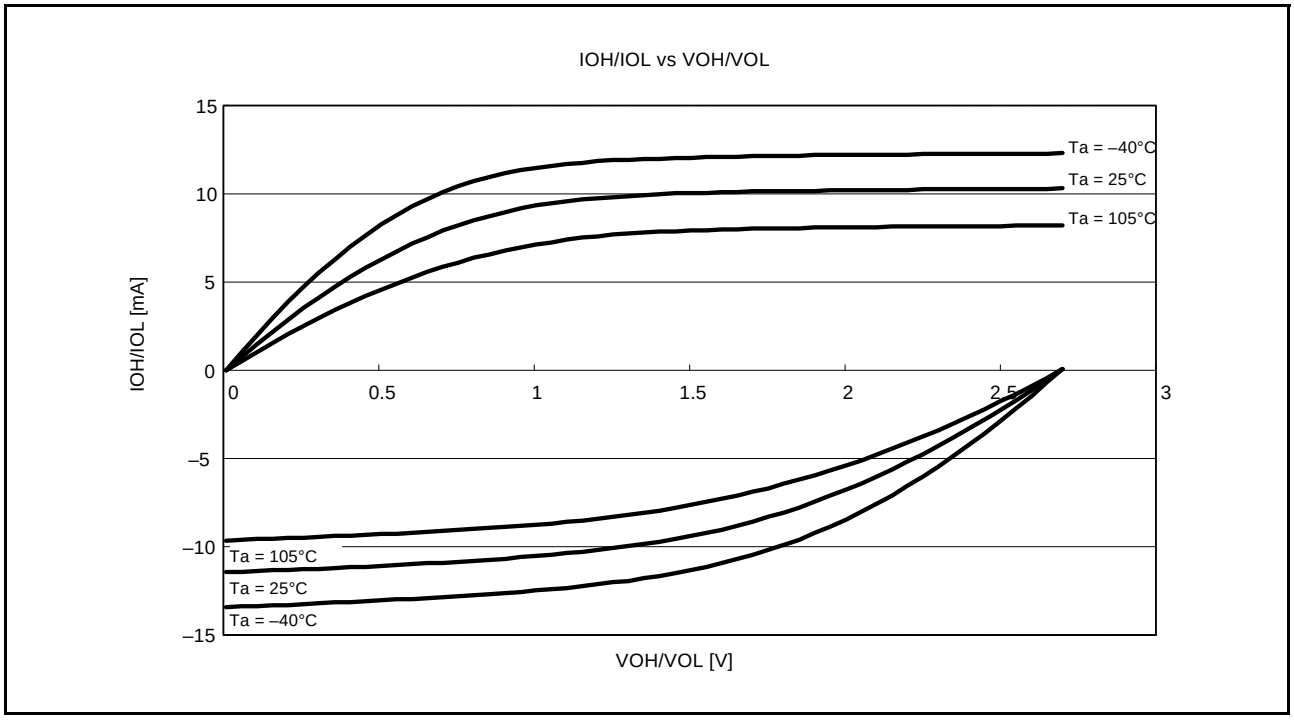

Figure 5.47 VOH/VOL and IOH/IOL Temperature Characteristics at VCC = 2.7 V when Normal Output is Selected (Reference Data)

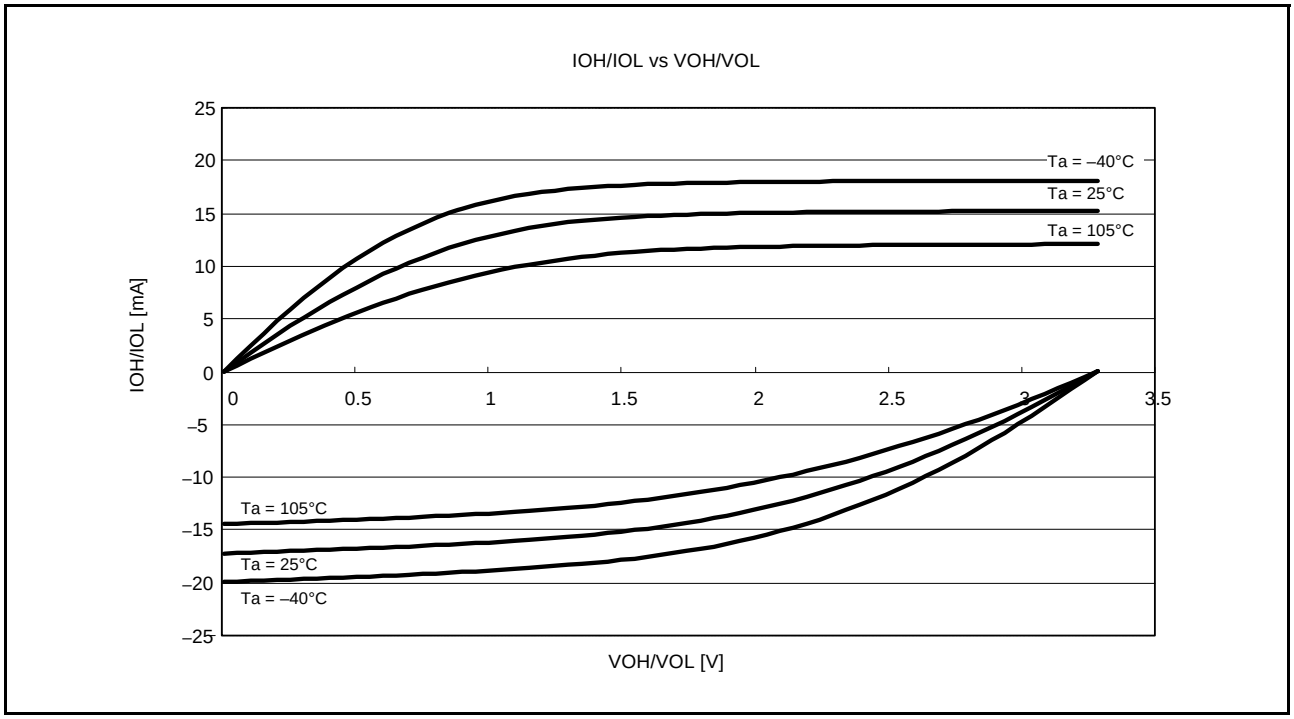

Figure 5.48 VOH/VOL and IOH/IOL Temperature Characteristics at VCC = 3.3 V when Normal Output is Selected (Reference Data)

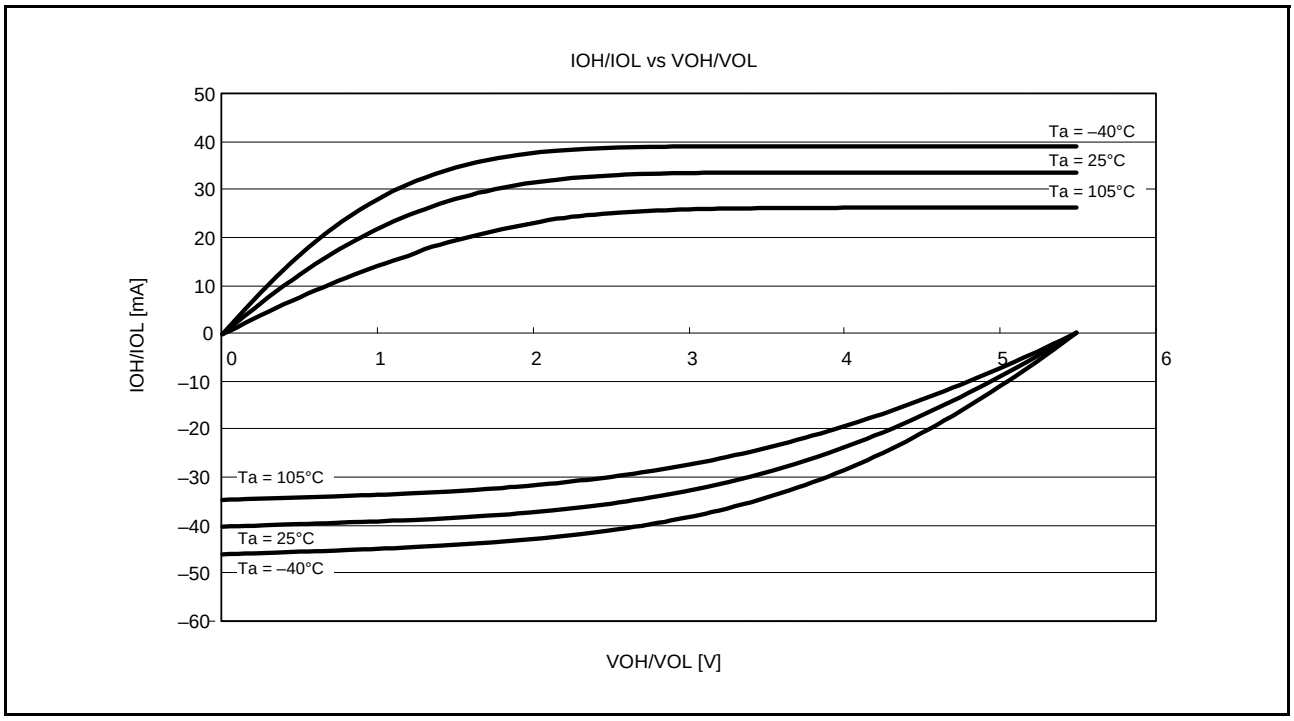

Figure 5.49 VOH/VOL and IOH/IOL Temperature Characteristics at VCC = 5.5 V when Normal Output is Selected (Reference Data)

5.2.2 Standard I/O Pin Output Characteristics (2)

Figure 5.50 to Figure 5.54 show the characteristics when high-drive output is selected by the drive capacity control register.

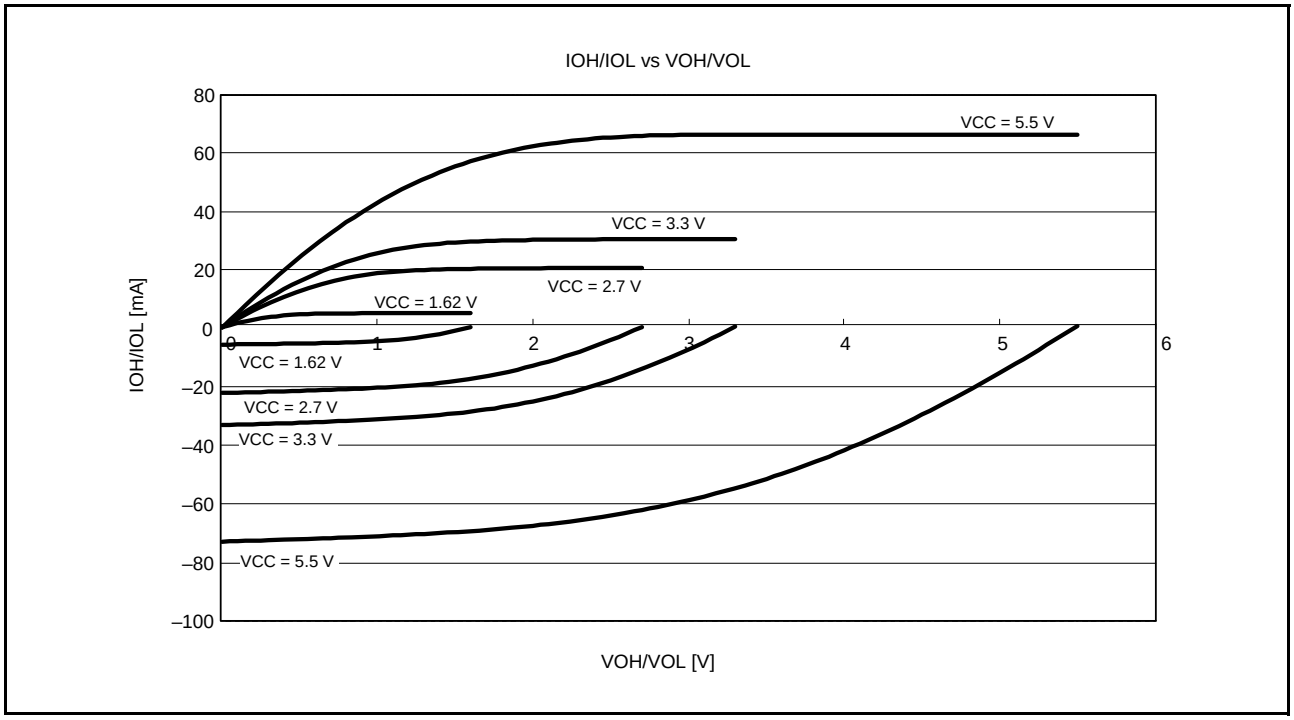

Figure 5.50 VOH/VOL and IOH/IOL Voltage Characteristics at Ta = 25°C when High-Drive Output is Selected (Reference Data)

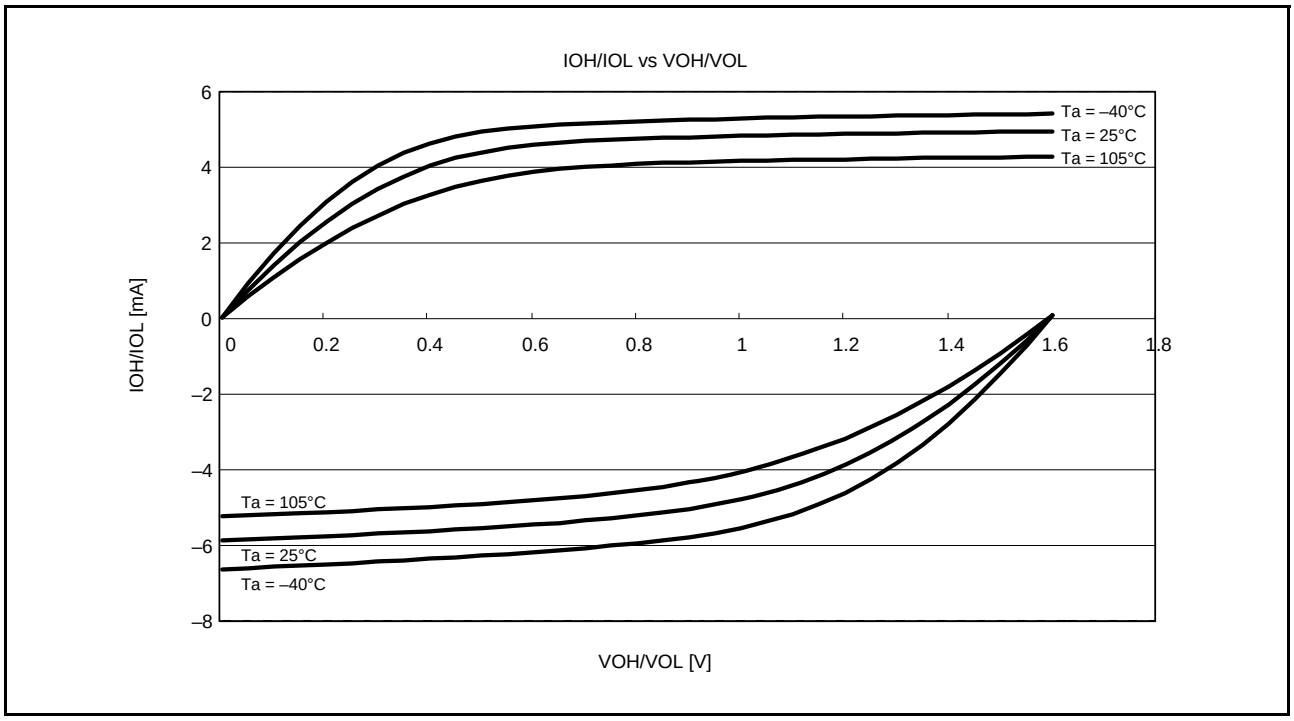

Figure 5.51 VOH/VOL and IOH/IOL Temperature Characteristics at VCC = 1.62 V when High-Drive Output is Selected (Reference Data)

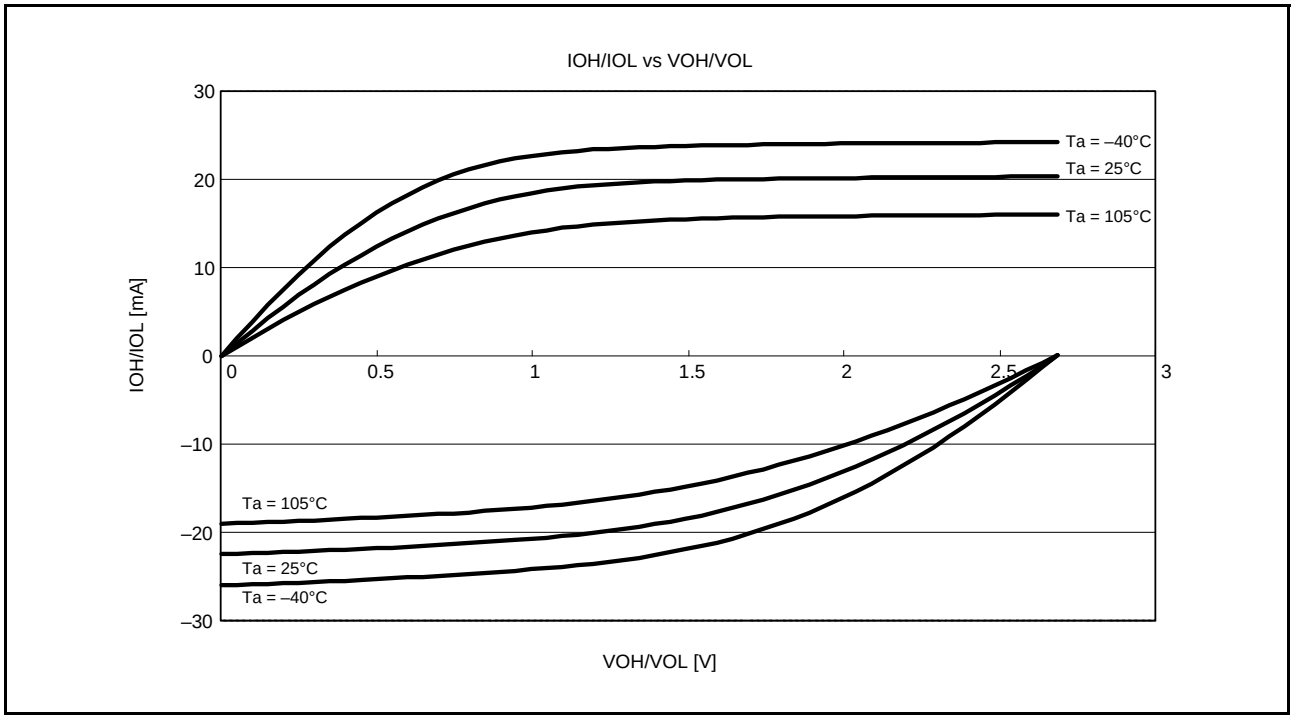

Figure 5.52 VOH/VOL and IOH/IOL Temperature Characteristics at VCC = 2.7 V when High-Drive Output is Selected (Reference Data)

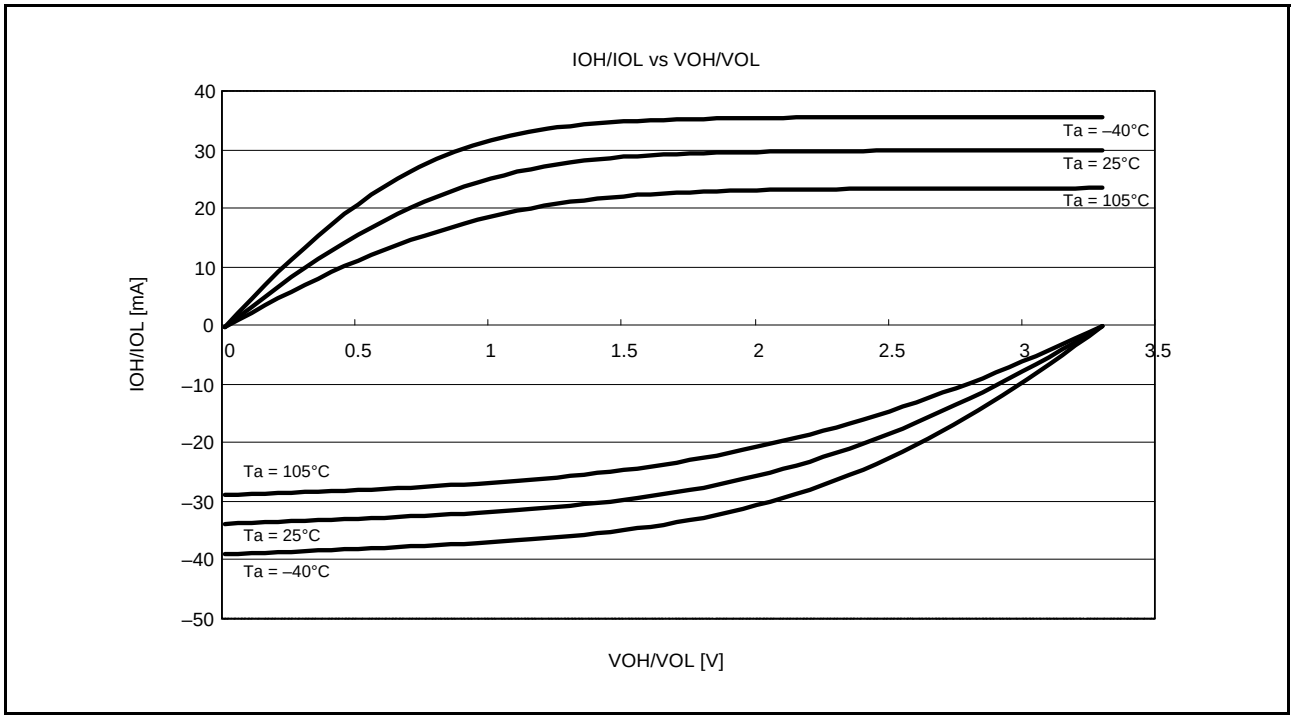

Figure 5.53 VOH/VOL and IOH/IOL Temperature Characteristics at VCC = 3.3 V when High-Drive Output is Selected (Reference Data)

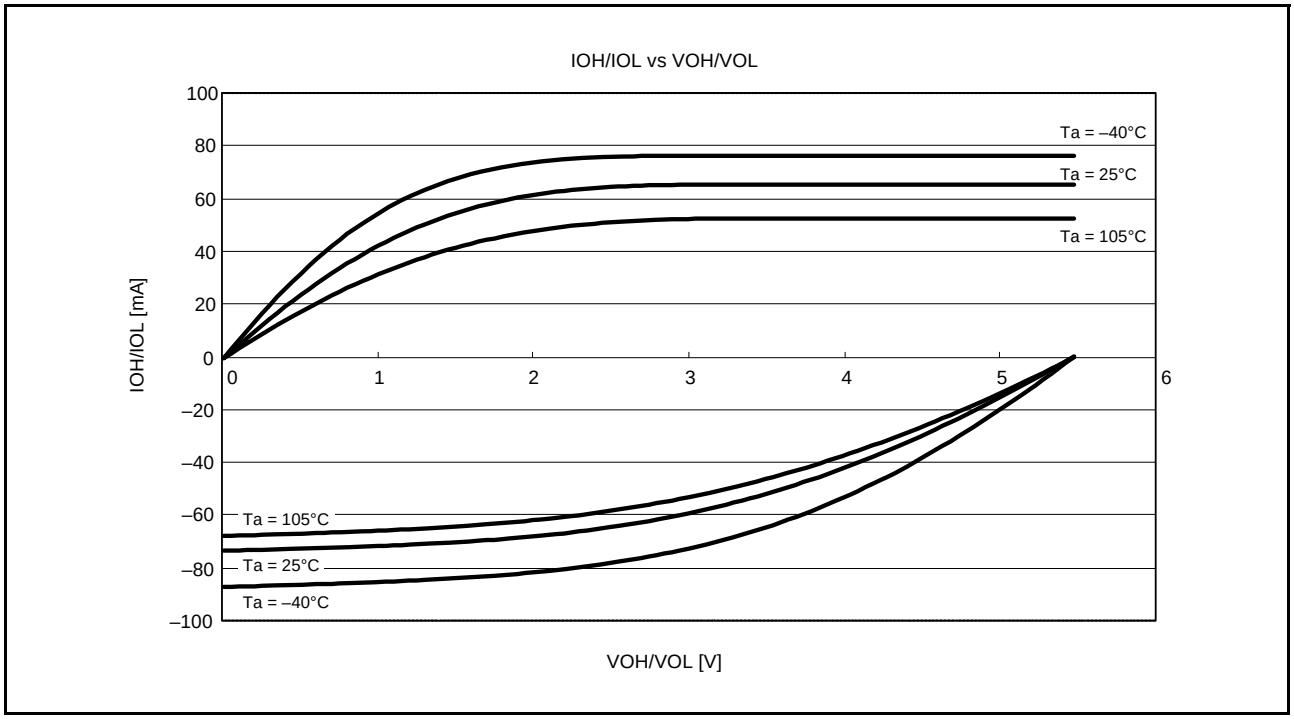

Figure 5.54 VOH/VOL and IOH/IOL Temperature Characteristics at VCC = 5.5 V when High-Drive Output is Selected (Reference Data)

5.2.3 RIIC Pin Output Characteristics

Figure 5.55 to Figure 5.58 show the output characteristics of the RIIC pin.

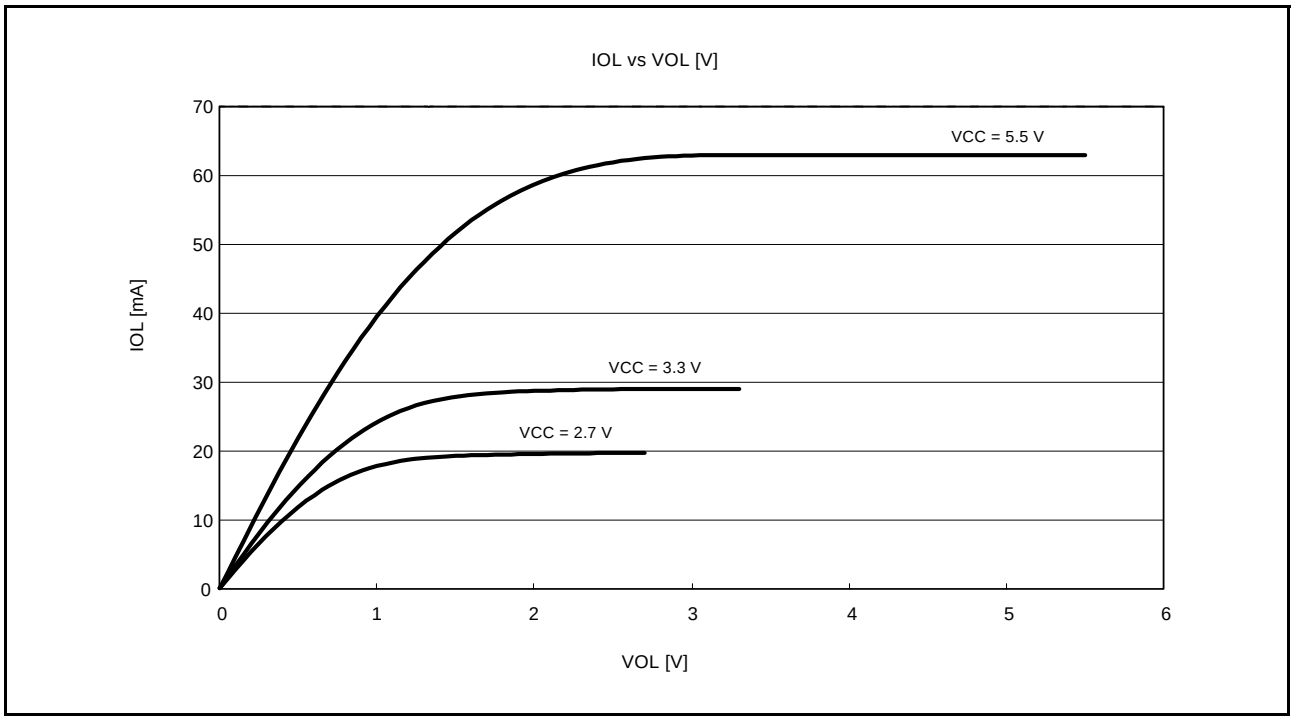

Figure 5.55 VOL and IOL Voltage Characteristics of RIIC Output Pin at Ta = 25°C (Reference Data)

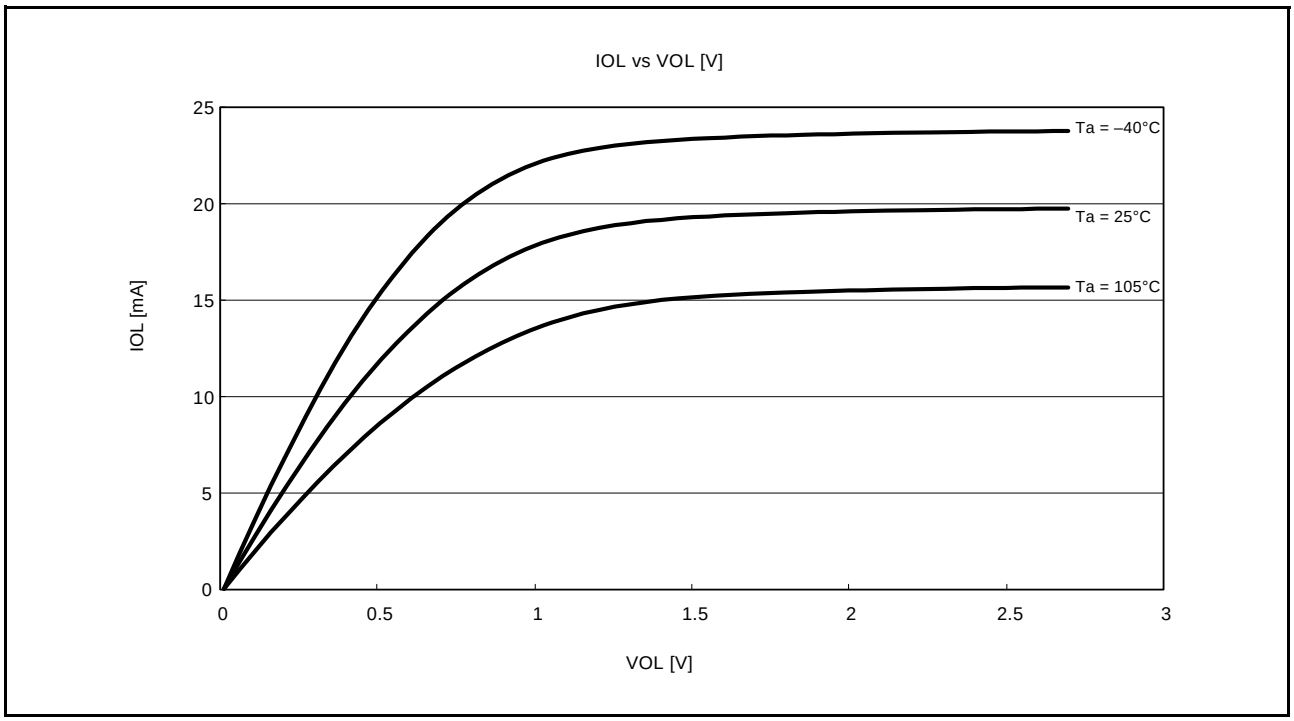

Figure 5.56 VOL and IOL Temperature Characteristics of RIIC Output Pin at VCC = 2.7 V (Reference Data)

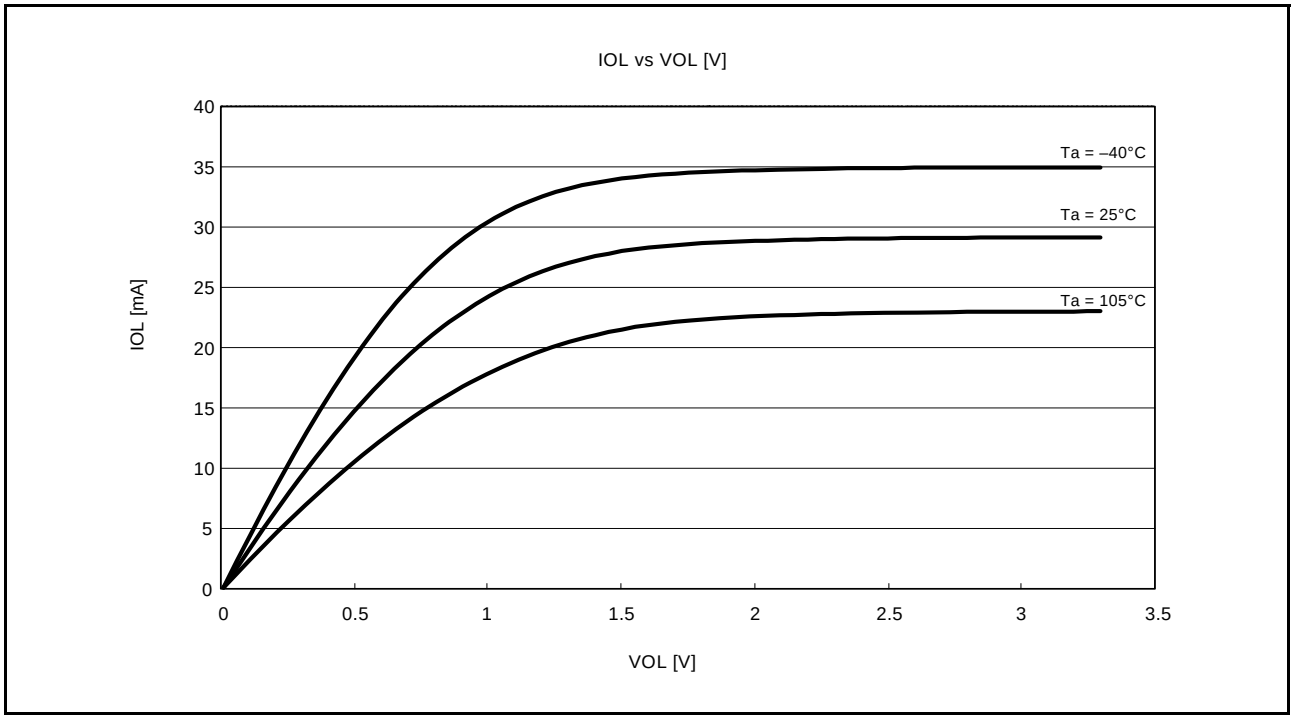

Figure 5.57 VOL and IOL Temperature Characteristics of RIIC Output Pin at VCC = 3.3 V (Reference Data)

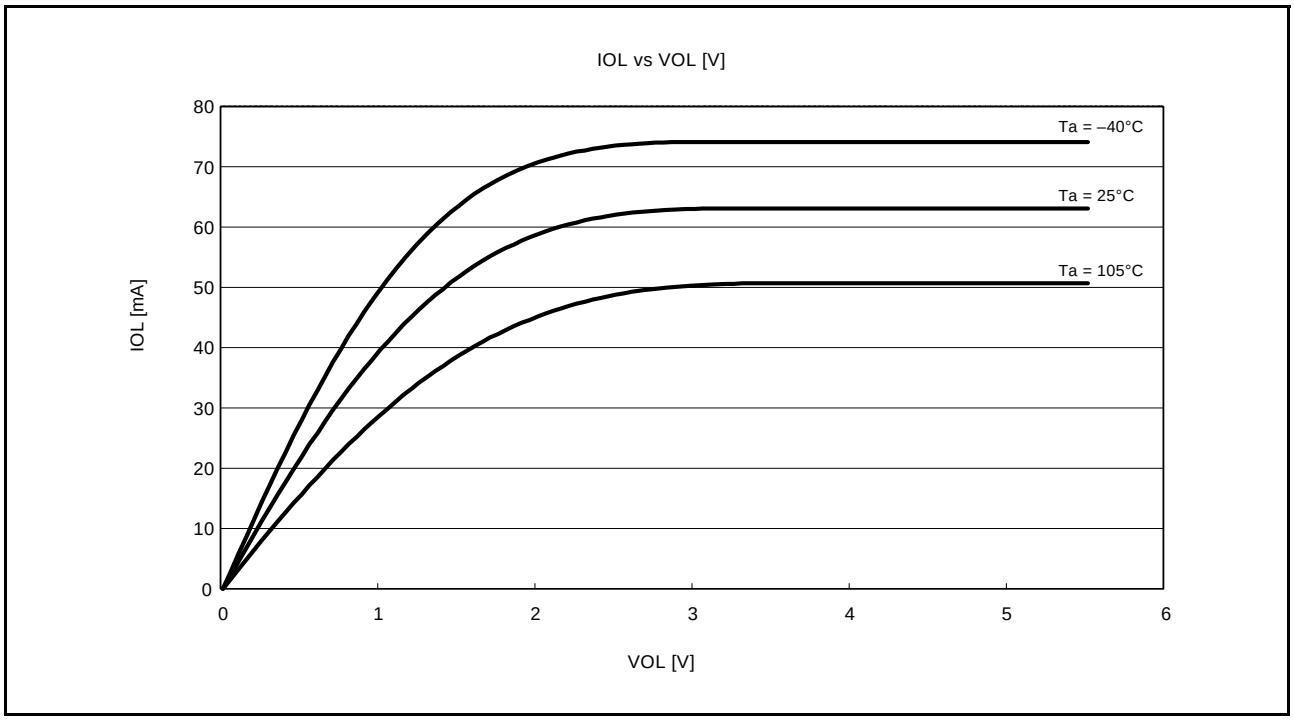

Figure 5.58 VOL and IOL Temperature Characteristics of RIIC Output Pin at VCC = 5.5 V (Reference Data)

5.3 AC Characteristics

[Chip versions A, B, and C]

Table 5.33 Operation Frequency Value (High-Speed Operating Mode)

Conditions: VCC = AVCC0 = 2.7 to 5.5 V, VSS = AVSS0 = VREFL = VREFL0 = 0 V, T_a = –40 to +105°C

Item		Symbol	VCC	Unit
			2.7 to 5.5 V	
Maximum operating frequency	System clock (ICLK)	f_{max}	50	MHz
	FlashIF clock (FCLK)*1		32	
	Peripheral module clock (PCLKB)		32	
	Peripheral module clock (PCLKD)*2		50	
	External bus clock (BCLK)		25	
	BCLK pin output		12.5	

Note 1. The lower-limit frequency of FCLK is 4 MHz during programming or erasing of the flash memory.
Note 2. The lower-limit frequency of PCLKD is 1 MHz when the A/D converter is in use.

[Chip versions A, B, and C]

Table 5.34 Operation Frequency Value (MiddleSpeed Operating Mode 1A)

Conditions: VCC = AVCC0 = 1.62 to 5.5 V, VSS = AVSS0 = VREFL = VREFL0 = 0 V, T_a = –40 to +105°C

Item		Symbol	VCC			Unit
			1.62 to 1.8 V	1.8 to 2.7 V	2.7 to 5.5 V	
Maximum operating frequency	System clock (ICLK)	f_{max}	20	32	32	MHz
	FlashIF clock (FCLK)*1		20	32	32	
	Peripheral module clock (PCLKB)		20	32	32	
	Peripheral module clock (PCLKD)*2		20	32	32	
	External bus clock (BCLK)		12	16	25	
	BCLK pin output		6	8	12.5	

Note 1. The VCC is 2.7 to 5.5 V and the lower-limit frequency of FCLK is 4 MHz during programming or erasing of the flash memory.
Note 2. The lower-limit frequency of PCLKD is 1 MHz when the A/D converter is in use.

[Chip versions A, B, and C]

Table 5.35 Operation Frequency Value (Middle-Speed Operating Mode 1B)

Conditions: VCC = AVCC0 = 1.62 to 5.5 V, VSS = AVSS0 = VREFL = VREFL0 = 0 V, T_a = –40 to +105°C

Item		Symbol	VCC			Unit
			1.62 to 1.8 V	1.8 to 2.7 V	2.7 to 5.5 V	
Maximum operating frequency	System clock (ICLK)	f_{max}	20	32	32	MHz
	FlashIF clock (FCLK)*1		20	32	32	
	Peripheral module clock (PCLKB)		20	32	32	
	Peripheral module clock (PCLKD)*2		20	32	32	
	External bus clock (BCLK)		12	16	25	
	BCLK pin output		6	8	12.5	

Note 1. The VCC is 1.62 to 3.6 V and the lower-limit frequency of FCLK is 4 MHz during programming or erasing of the flash memory.
Note 2. The lower-limit frequency of PCLKD is 1 MHz when the A/D converter is in use.

[Chip version B]

Table 5.36 Operation Frequency Value (Middle-Speed Operating Mode 2A)

Conditions: VCC = AVCC0 = 1.62 to 5.5 V, VSS = AVSS0 = VREFL = VREFL0 = 0 V, T_a = –40 to +105°C

Item		Symbol	VCC			Unit
			1.62 to 1.8 V	1.8 to 2.7 V	2.7 to 5.5 V	
Maximum operating frequency	System clock (ICLK)	f_{max}	8	16	32	MHz
	FlashIF clock (FCLK)*1		8	16	32	
	Peripheral module clock (PCLKB)		8	16	32	
	Peripheral module clock (PCLKD)*2		8	16	32	
	External bus clock (BCLK)		8	16	25	
	BCLK pin output		8	8	12.5	

Note 1. The VCC is 2.7 to 5.5 V and the lower-limit frequency of FCLK is 4 MHz during programming or erasing of the flash memory.
Note 2. The lower-limit frequency of PCLKD is 1 MHz when the A/D converter is in use.

[Chip version B]

Table 5.37 Operation Frequency Value (Middle-Speed Operating Mode 2B)

Conditions: VCC = AVCC0 = 1.62 to 5.5 V, VSS = AVSS0 = VREFL = VREFL0 = 0 V, T_a = –40 to +105°C

Item		Symbol	VCC			Unit
			1.62 to 1.8 V	1.8 to 2.7 V	2.7 to 5.5 V	
Maximum operating frequency	System clock (ICLK)	f_{max}	8	16	32	MHz
	FlashIF clock (FCLK)*1		8	16	32	
	Peripheral module clock (PCLKB)		8	16	32	
	Peripheral module clock (PCLKD)*2		8	16	32	
	External bus clock (BCLK)		8	16	25	
	BCLK pin output		8	8	12.5	

Note 1. The VCC is 1.62 to 3.6 V and the lower-limit frequency of FCLK is 4 MHz during programming or erasing of the flash memory.
Note 2. The lower-limit frequency of PCLKD is 1 MHz when the A/D converter is in use.

[Chip versions A and C]

Table 5.38 Operation Frequency Value (Low-Speed Operating Mode 1)

Conditions: VCC = AVCC0 = 1.62 to 5.5 V, VSS = AVSS0 = VREFL = VREFL0 = 0 V, T_a = –40 to +105°C

Item		Symbol	VCC			Unit
			1.62 to 1.8 V	1.8 to 2.7 V	2.7 to 5.5 V	
Maximum operating frequency	System clock (ICLK)	f_{max}	1	1	1	MHz
	FlashIF clock (FCLK)*1		1	1	1	
	Peripheral module clock (PCLKB)		1	1	1	
	Peripheral module clock (PCLKD)*2		1	1	1	
	External bus clock (BCLK)		1	1	1	
	BCLK pin output		1	1	1	

Note 1. Programming and erasing the flash memory is impossible.
Note 2. The lower-limit frequency of PCLKD is 1 MHz when the A/D converter is in use.

[Chip version B]

Table 5.39 Operation Frequency Value (Low-Speed Operating Mode 1)

Conditions: VCC = AVCC0 = 1.62 to 5.5 V, VSS = AVSS0 = VREFL = VREFL0 = 0 V, T_a = –40 to +105°C

Item		Symbol	VCC			Unit
			1.62 to 1.8 V	1.8 to 2.7 V	2.7 to 5.5 V	
Maximum operating frequency	System clock (ICLK)	f_{max}	2	4	8	MHz
	FlashIF clock (FCLK)*1		2	4	8	
	Peripheral module clock (PCLKB)		2	4	8	
	Peripheral module clock (PCLKD)*2		2	4	8	
	External bus clock (BCLK)		2	4	8	
	BCLK pin output		2	4	8	

Note 1. Programming and erasing the flash memory is impossible.
Note 2. The lower-limit frequency of PCLKD is 1 MHz when the A/D converter is in use.

[Chip versions A, B, and C]

Table 5.40 Operation Frequency Value (Low-Speed Operating Mode 2)

Conditions: VCC = AVCC0 = 1.62 to 5.5 V, VSS = AVSS0 = VREFL=VREFL0 = 0 V, T_a = –40 to +105°C

Item		Symbol	VCC			Unit
			1.62 to 1.8 V	1.8 to 2.7 V	2.7 to 5.5 V	
Maximum operating frequency	System clock (ICLK)	f_{max}	32.768	32.768	32.768	kHz
	FlashIF clock (FCLK)*1		32.768	32.768	32.768	
	Peripheral module clock (PCLKB)		32.768	32.768	32.768	
	Peripheral module clock (PCLKD)*2		32.768	32.768	32.768	
	External bus clock (BCLK)		32.768	32.768	32.768	
	BCLK pin output		32.768	32.768	32.768	

Note 1. Programming and erasing the flash memory is impossible.
Note 2. The A/D converter cannot be used.

5.3.1 Clock Timing

Table 5.41 BCLK Timing (1)

Conditions: VCC = AVCC0 = 2.7 to 5.5 V, VSS = AVSS0 = VREFL = VREFL0 = 0 V,
fBCLK = up to 25 MHz (BCLK pin output frequency = up to 12.5 MHz), T_a = –40 to +105°C

Item	Symbol	Min.	Typ.	Max.	Unit	Test Conditions
BCLK pin output cycle time	t_{Bcyc}	80	—	—	ns	Figure 5.59
BCLK pin output high pulse width*1	t_{CH}	20	—	—	ns	
BCLK pin output low pulse width*1	t_{CL}	20	—	—	ns	
BCLK pin output rising time	t_{Cr}	—	—	15	ns	
BCLK pin output falling time	t_{Cf}	—	—	15	ns	

Note 1. When the EXTAL external clock input is used with divided by 1 (SCKCR.BCK[3:0] bits = 0000b and BCKCR.BCLKDIV bit = 0) to output from the BCLK pin, the above should be satisfied with a duty cycle of 45 to 55%.

Table 5.42 BCLK Timing (2)

Conditions: VCC = AVCC0 = 1.8 to 2.7 V, VSS = AVSS0 = VREFL = VREFL0 = 0 V,
fBCLK = up to 16 MHz (BCLK pin output frequency= up to 8 MHz), T_a = –40 to +105°C

Item	Symbol	Min.	Typ.	Max.	Unit	Test Conditions
BCLK pin output cycle time	t_{Bcyc}	125	—	—	ns	Figure 5.59
BCLK pin output high pulse width*1	t_{CH}	30	—	—	ns	
BCLK pin output low pulse width*1	t_{CL}	30	—	—	ns	
BCLK pin output rising time	t_{Cr}	—	—	25	ns	
BCLK pin output falling time	t_{Cf}	—	—	25	ns	

Note 1. When the EXTAL external clock input is used with divided by 1 (SCKCR.BCK[3:0] bits = 0000b and BCKCR.BCLKDIV bit = 0) to output from the BCLK pin, the above should be satisfied with a duty cycle of 45 to 55%.

Table 5.43 BCLK Timing (3)

Conditions: VCC = AVCC0 = 1.62 to 1.8 V, VSS = AVSS0 = VREFL=VREFL0 = 0 V,
fBCLK = up to 12 MHz (BCLK pin output frequency = up to 6 MHz), T_a = –40 to +105°C

Item	Symbol	Min.	Typ.	Max.	Unit	Test Conditions
BCLK pin output cycle time	t_{Bcyc}	166.6	—	—	ns	Figure 5.59
BCLK pin output high pulse width*1	t_{CH}	42	—	—	ns	
BCLK pin output low pulse width*1	t_{CL}	42	—	—	ns	
BCLK pin output rising time	t_{Cr}	—	—	35	ns	
BCLK pin output falling time	t_{Cf}	—	—	35	ns	

Note: • Set high driving ability for the output port pin to be used for the BCLK pin function.
Note 1. When the EXTAL external clock input is used with divided by 1 (SCKCR.BCK[3:0] bits = 0000b and BCKCR.BCLKDIV bit = 0) to output from the BCLK pin, the above should be satisfied with a duty cycle of 45 to 55%.

Table 5.44 Clock Timing

Conditions: VCC = AVCC0 = 1.62 to 5.5 V, VSS = AVSS0 = VREFL = VREFL0 = 0 V, T_a = –40 to +105°C

Item		Symbol	Min.	Typ.	Max.	Unit	Test Conditions
EXTAL external clock input cycle time		t_{EXcyc}	50	—	—	ns	Figure 5.60
EXTAL external clock input high pulse width		t_{EXH}	20	—	—	ns	
EXTAL external clock input low pulse width		t_{EXL}	20	—	—	ns	
EXTAL external clock rising time		t_{EXr}	—	—	5	ns	
EXTAL external clock falling time		t_{EXf}	—	—	5	ns	
EXTAL external clock input wait time*1		t_{EXWT}	1	—	—	ms	
Main clock oscillator oscillation frequency*2		f_{MAIN}	1	—	20	MHz	
Main clock oscillation stabilization time (crystal)*2		$t_{MAINOSC}$	—	3	—	ms	Figure 5.61
Main clock oscillation stabilization time (ceramic resonator)*2		$t_{MAINOSC}$	—	50		μs	
Main clock oscillation stabilization wait time (crystal)*2		$t_{MAINOSCWT}$	—	6	—	ms	
Main clock oscillation stabilization wait time (ceramic resonator)*2		$t_{MAINOSCWT}$	—	100		μs	
LOCO clock cycle time		t_{cyc}	7.27	8	8.89	μs	
LOCO clock oscillation frequency*6		f_{LOCO}	112.5	125	137.5	kHz	
LOCO clock oscillation stabilization wait time		t_{LOCOWT}	—	—	20	μs	Figure 5.62
HOCO clock oscillation frequency*7		f_{HOCO}	31.680	32	32.320	MHz	Ta = 0 to 50°C
			36.495	36.864	37.233		
			39.600	40	40.400		
			49.500	50	50.500		
			31.520	32	32.480		Ta = -40 to 105°C
			36.311	36.864	37.417		
			39.400	40	40.600		
			49.250	50	50.750		
HOCO clock oscillation stabilization time 1		t_{HOCO1}	—	—	300	μs	Figure 5.63
HOCO clock oscillation stabilization time 2		t_{HOCO2}	—	—	175	μs	Figure 5.64
HOCO clock oscillation stabilization wait time		t_{HOCOWT}	—	—	350	μs	Figure 5.64
HOCO clock power supply stabilization time		t_{HOCOP}	—	—	350	μs	Figure 5.65
PLL input frequency		f_{PLLIN}	4	—	12.5	MHz	
PLL circuit oscillation frequency		f_{PLL}	50	—	100	MHz	
PLL clock oscillation stabilization time	PLL operation started after main clock oscillation has settled	t_{PLL1}	—	—	500	μs	Figure 5.66
PLL clock oscillation stabilization wait time		t_{PLLWT1}	1.5	—	—	ms	
PLL clock oscillation stabilization time*4	PLL operation started before main clock oscillation has settled	t_{PLL2}	—	3.5*3	—	ms	Figure 5.67
PLL clock oscillation stabilization wait time*4		t_{PLLWT2}	—	7	—	ms	
PLL clock power supply stabilization time (for chip version B only)		t_{PLLPW}	—	—	30	μs	Figure 5.68
Sub-clock oscillator oscillation frequency		f_{SUB}	—	32.768	—	kHz	
Sub-clock oscillation stabilization time*5		t_{SUBOSC}	2	—	—	s	Figure 5.69
Sub-clock oscillation stabilization wait time*5		$t_{SUBOSCWT}$	4	—	—	s	

Note 1. The time interval from the time P36 and P37 are configured for input and the main clock oscillator stopping bit (MOSCCR.MOSTP) is set to 0 (operating) until the clock becomes available.

Note 2. When specifying the main clock oscillator stabilization time, load the MOSCWTCR register with a stabilization time value that is greater than the resonator-vendor-recommended value. When determining the main lock oscillation stabilization wait time, allow an adequate margin (2 times is recommended) for the main clock oscillation stabilization time.
Start using the main clock in the main clock oscillation stabilization wait time (tMAINOSCWT) after setting up the main clock oscillator for operation with the MOSCCR.MOSTP bit.
The indicated value is a reference value that is measured for an 8 MHz resonator.

Note 3. Sum of the main clock oscillation stabilization time and the PLL oscillation stabilization time.

Note 4. The indicated value is a reference value that is measured for an 8 MHz resonator.

Note 5. When specifying the sub-clock oscillation stabilization time, load the SOSCWTCR register with the resonator-vendor-recommended stabilization time value minus 2 seconds. When determining the sub-clock oscillation stabilization wait time, allow an adequate margin (2 times is recommended) for the sub-clock oscillation stabilization time. Start using the sub-clock in the sub-clock oscillation stabilization wait time (tSUBOSCWT) after setting up the sub-clock oscillator for operation with the SOSCCR.SOSTP or RCR3.RTCEN bit.

Note 6. There is no minimum or maximum value for 69-pin WLBGA.

Note 7. Characteristic value before mounting on the board for 69-pin WLBGA.

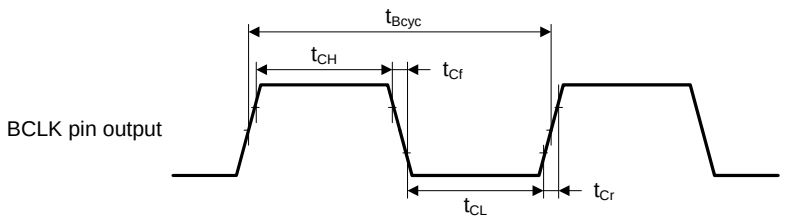

Test conditions: VOH = VCC × 0.7, VOL = VCC × 0.3, IOH = –1.0 mA, IOL = 1.0 mA, C = 30 pF

Figure 5.59 BCLK Pin Output Timing

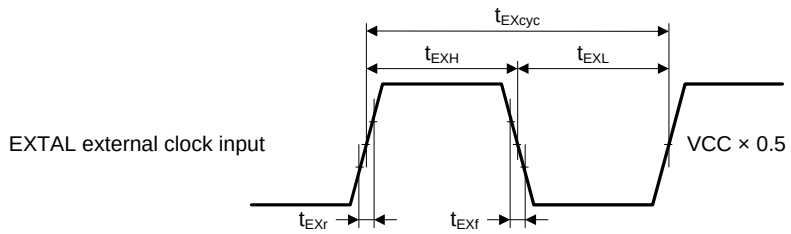

Figure 5.60 EXTAL External Clock Input Timing

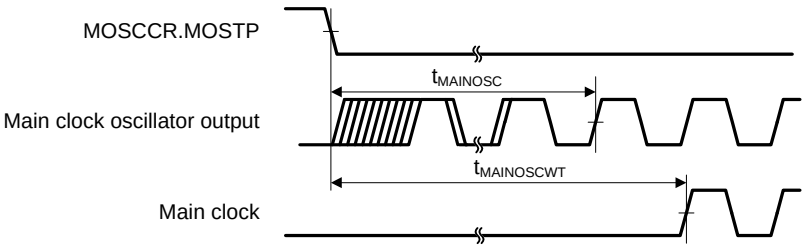

Figure 5.61 Main Clock Oscillation Start Timing

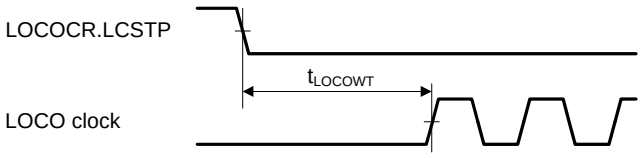

Figure 5.62 LOCO Clock Oscillation Start Timing

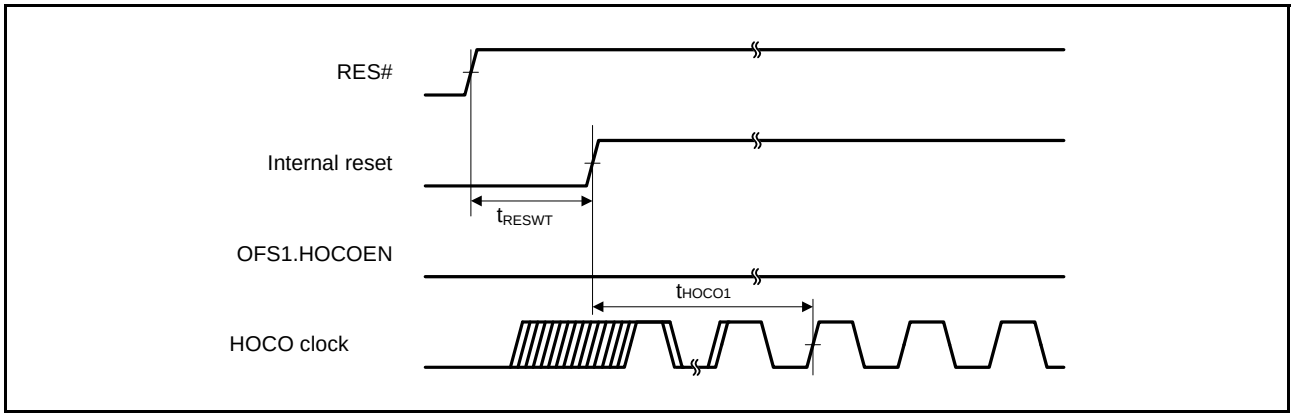

Figure 5.63 HOCO Clock Oscillation Start Timing (After Reset is Canceled by Setting the OFS1.HOCOEN Bit to 0)

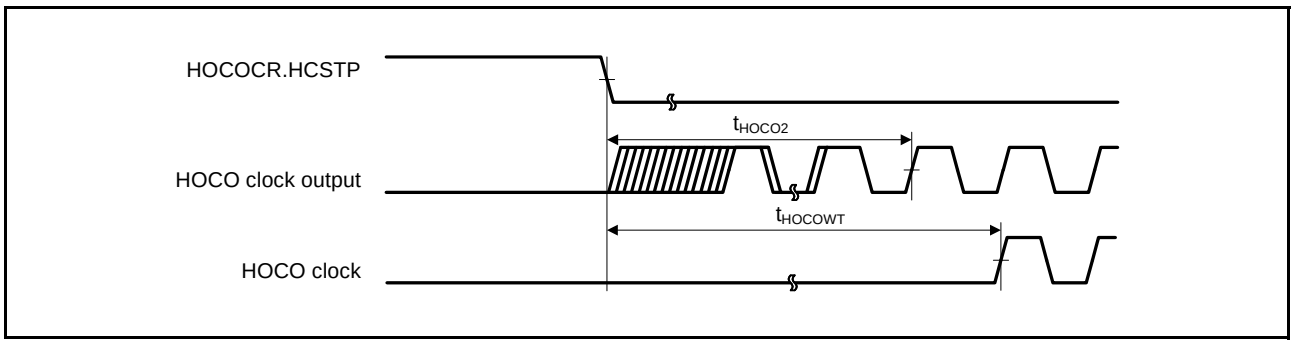

Figure 5.64 HOCO Clock Oscillation Start Timing (Oscillation is Started by Setting the HOCOCR.HCSTP Bit)

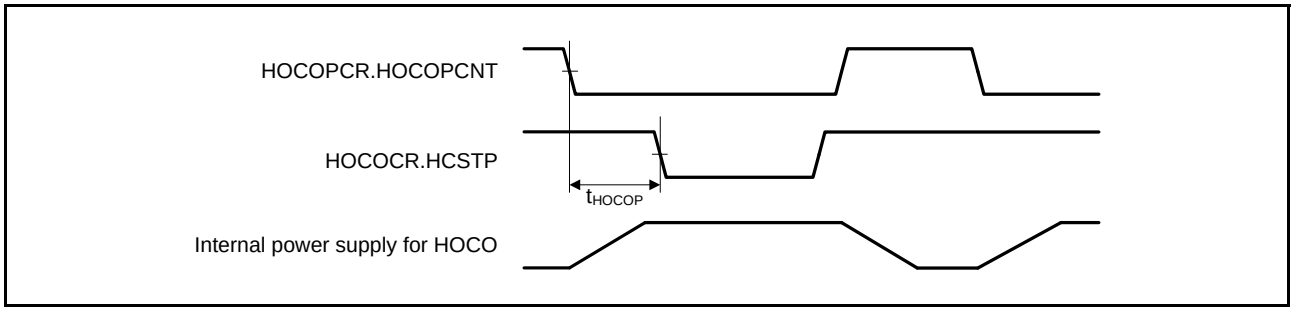

Figure 5.65 HOCO Power Control Timing

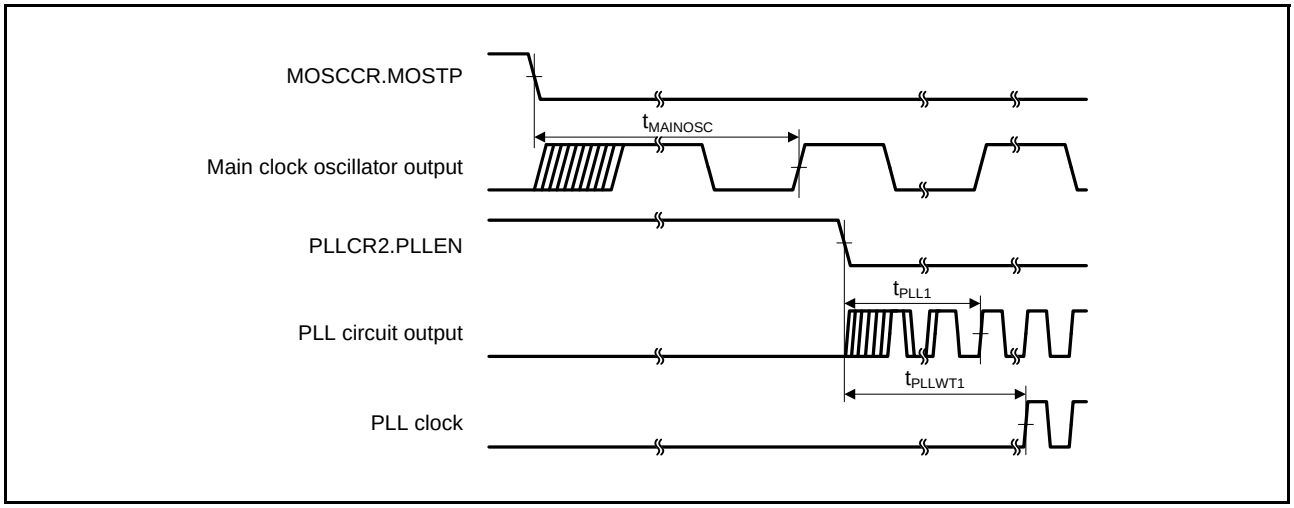

Figure 5.66 PLL Clock Oscillation Start Timing (PLL is Operated after Main Clock Oscillation Has Settled)

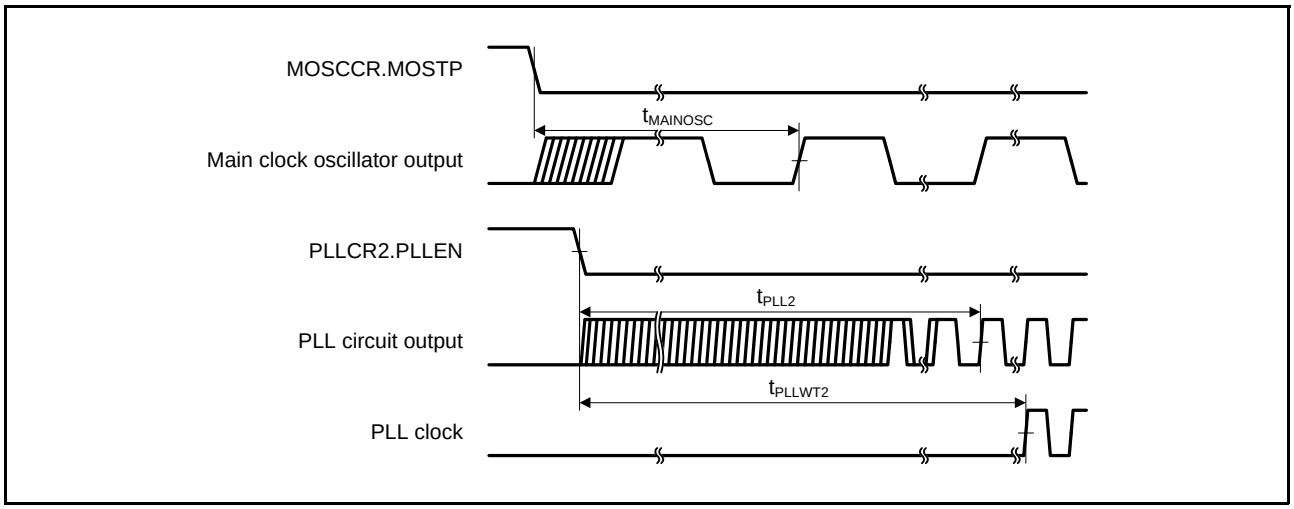

Figure 5.67 PLL Clock Oscillation Start Timing (PLL is Operated before Main Clock Oscillation Has Settled)

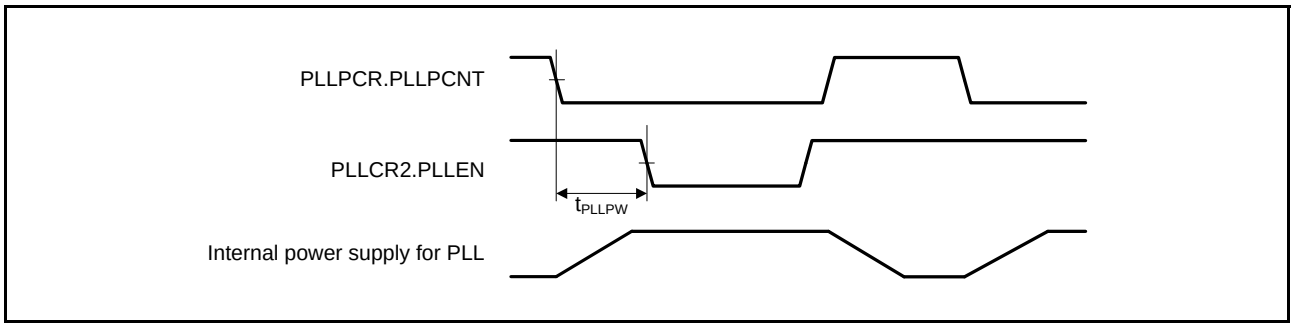

Figure 5.68 PLL Power Control Timing

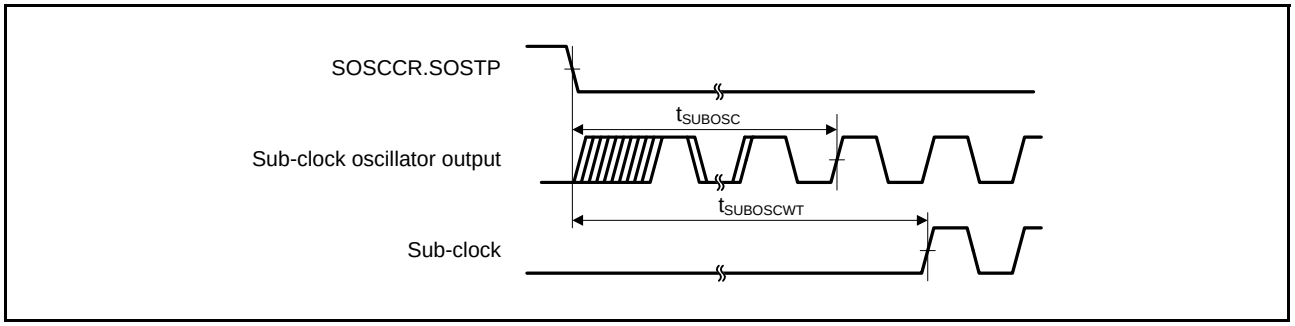

Figure 5.69 Sub-clock Oscillation Start Timing

5.3.2 Reset Timing

Table 5.45 Reset Timing

Conditions: VCC = AVCC0 = 1.62 to 5.5 V, VSS = AVSS0 = VREFL = VREFL0 = 0 V, T_a = –40 to +105°C

Item		Symbol	Min.	Typ.	Max.	Unit	Test Conditions
RES# pulse width	Power-on	t_{RESWP}	8	—	—	ms	Figure 5.70
	Deep software standby mode	t_{RESWD}	8	—	—	ms	Figure 5.71
	Software standby mode, low-speed operating modes 1 and 2	t_{RESWS}	1	—	—	ms	
	Programming or erasure of the ROM or E2 DataFlash memory or blank checking of the E2 DataFlash memory	t_{RESWF}	200	—	—	μs	
	Other than above	t_{RESW}	200	—	—	μs	
Wait time after RES# cancellation		t_{RESWT}	—	—	912	μs	Figure 5.70
Internal reset time (independent watchdog timer reset, watchdog timer reset, software reset)		t_{RESW2}	—	—	1.4	ms	

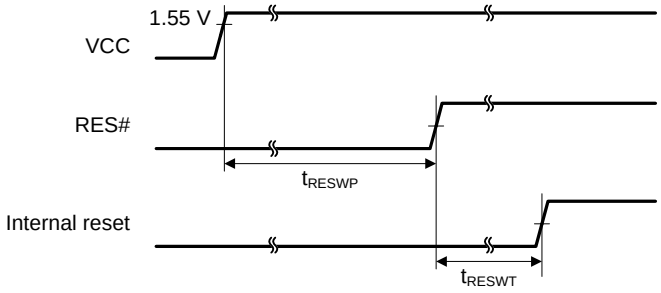

Figure 5.70 Reset Input Timing at Power-On

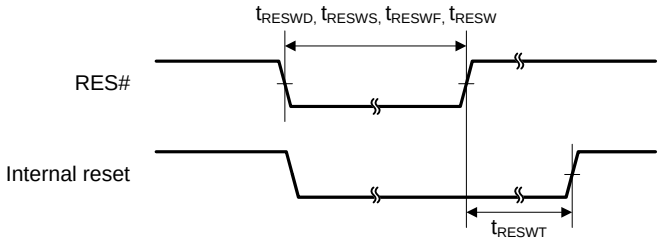

Figure 5.71 Reset Input Timing

5.3.3 Timing of Recovery from Low Power Consumption Modes

[Chip versions A and C]

Table 5.46 Timing of Recovery from Low Power Consumption Modes

Conditions: VCC = AVCC0 = 1.62 to 5.5 V, VSS = AVSS0 = VREFL = VREFL0 = 0 V, T_a = –40 to +105°C

Item			Symbol	Min.	Typ.	Max.	Unit	Test Conditions
Recovery time after cancellation of software standby mode (flash memory, HOCO power supplied) (SOFTCUT[2:0] bits = 000b)*1	Crystal resonator connected to main clock oscillator*2	Main clock oscillator operating	t_{SBYMC}	—	3	—	ms	Figure 5.72
		Main clock oscillator and PLL circuit operating	t_{SBYPC}	—	3.5	—	ms	
	External clock input to main clock oscillator	Main clock oscillator operating	t_{SBYEX}	10	—	—	μs	
		Main clock oscillator and PLL circuit operating	t_{SBYPE}	0.5	—	—	ms	
	Sub-clock oscillator operating		t_{SBYSC}	2*3	—	—	s	
	HOCO clock oscillator operating		t_{SBYHO}	—	—	500	μs	
	LOCO clock oscillator operating		t_{SBYLO}	—	—	90	μs	
Recovery time after cancellation of software standby mode (flash memory power supplied, HOCO power not supplied) (SOFTCUT[2:0] bits = 110b)*1	Crystal resonator connected to main clock oscillator*2	Main clock oscillator operating	t_{SBYMC}	—	3	—	ms	Figure 5.72
		Main clock oscillator and PLL circuit operating	t_{SBYPC}	—	3.5	—	ms	
	External clock input to main clock oscillator	Main clock oscillator operating	t_{SBYEX}	40	—	—	μs	
		Main clock oscillator and PLL circuit operating	t_{SBYPE}	0.5	—	—	ms	
	Sub-clock oscillator operating		t_{SBYSC}	2*3	—	—	s	
	HOCO clock oscillator operating		t_{SBYHO}	—	—	1.2	ms	
	LOCO clock oscillator operating		t_{SBYLO}	—	—	90	μs	
Recovery time after cancellation of software standby mode (flash memory, HOCO power not supplied) (SOFTCUT[2:0] bits = 111b)*1	Crystal resonator connected to main clock oscillator*2	Main clock oscillator operating	t_{SBYMC}	—	3	—	ms	Figure 5.72
		Main clock oscillator and PLL circuit operating	t_{SBYPC}	—	3.5	—	ms	
	External clock input to main clock oscillator	Main clock oscillator operating	t_{SBYEX}	100	—	—	μs	
		Main clock oscillator and PLL circuit operating	t_{SBYPE}	0.5	—	—	ms	
	Sub-clock oscillator operating		t_{SBYSC}	2*4	—	—	s	
	HOCO clock oscillator operating		t_{SBYHO}	—	—	1.2	ms	
	LOCO clock oscillator operating		t_{SBYLO}	—	—	10	ms	
Recovery time after cancellation of deep software standby mode			t_{DSBY}	—	—	8	ms	Figure 5.73
Wait time after cancellation of deep software standby mode			t_{DSBYWT}	—	—	0.8	ms	

Note 1. The recovery time varies depending on the state of each oscillator when the WAIT instruction is executed. The recovery time when multiple oscillators are operating varies depending on the operating state of the oscillators that are not selected as the system clock source, and depends on the time set in the wait control registers corresponding to the oscillators.

Note 2. The indicated value is measured for an 8 MHz crystal resonator.

Note 3. When RCR3.RTCEN = 1, the time will be the time set in the SOSCWTCR register minus 2 s.

Note 4. When RCR3.RTCEN = 1, the time will be the time set in the SOSCWTCR register minus 2 s and plus 31.25 ms.

[Chip version B]

Table 5.47 Timing of Recovery from Low Power Consumption Modes

Conditions: VCC = AVCC0 = 1.62 to 5.5 V, VSS = AVSS0 = VREFL = VREFL0 = 0 V, T_a = –40 to +105°C

Item			Symbol	Min.	Typ.	Max.	Unit	Test Conditions
Recovery time after cancellation of software standby mode (HOCO power supplied) (SOFTCUT[2:0] bits = 000b)*1	Crystal resonator connected to main clock oscillator*2	Main clock oscillator operating	t_{SBYMC}	—	3	—	ms	Figure 5.72
		Main clock oscillator and PLL circuit operating	t_{SBYPC}	—	3.5	—	ms	
	External clock input to main clock oscillator	Main clock oscillator operating	t_{SBYEX}	10	—	—	μs	
		Main clock oscillator and PLL circuit operating	t_{SBYPE}	0.5	—	—	ms	
	Sub-clock oscillator operating		t_{SBYSC}	2*3	—	—	s	
	HOCO clock oscillator operating		t_{SBYHO}	—	—	500	μs	
	LOCO clock oscillator operating		t_{SBYLO}	—	—	90	μs	
Recovery time after cancellation of software standby mode (HOCO power not supplied) (SOFTCUT[2:0] bits = 110b)*1	Crystal resonator connected to main clock oscillator*2	Main clock oscillator operating	t_{SBYMC}	—	3	—	ms	Figure 5.72
		Main clock oscillator and PLL circuit operating	t_{SBYPC}	—	3.5	—	ms	
	External clock input to main clock oscillator	Main clock oscillator operating	t_{SBYEX}	40	—	—	μs	
		Main clock oscillator and PLL circuit operating	t_{SBYPE}	0.5	—	—	ms	
	Sub-clock oscillator operating		t_{SBYSC}	2*3	—	—	s	
	HOCO clock oscillator operating		t_{SBYHO}	—	—	1.2	ms	
	LOCO clock oscillator operating		t_{SBYLO}	—	—	90	μs	
Recovery time after cancellation of deep software standby mode			t_{DSBY}	—	—	8	ms	Figure 5.73
Wait time after cancellation of deep software standby mode			t_{DSBYWT}	—	—	0.8	ms	

Note 1. The recovery time varies depending on the state of each oscillator when the WAIT instruction is executed. The recovery time when multiple oscillators are operating varies depending on the operating state of the oscillators that are not selected as the system clock source, and depends on the time set in the wait control registers corresponding to the oscillators.

Note 2. The indicated value is measured for an 8 MHz crystal resonator.

Note 3. When RCR3.RTCEN = 1, the time will be the time set in the SOSCWTCR register minus 2 s.

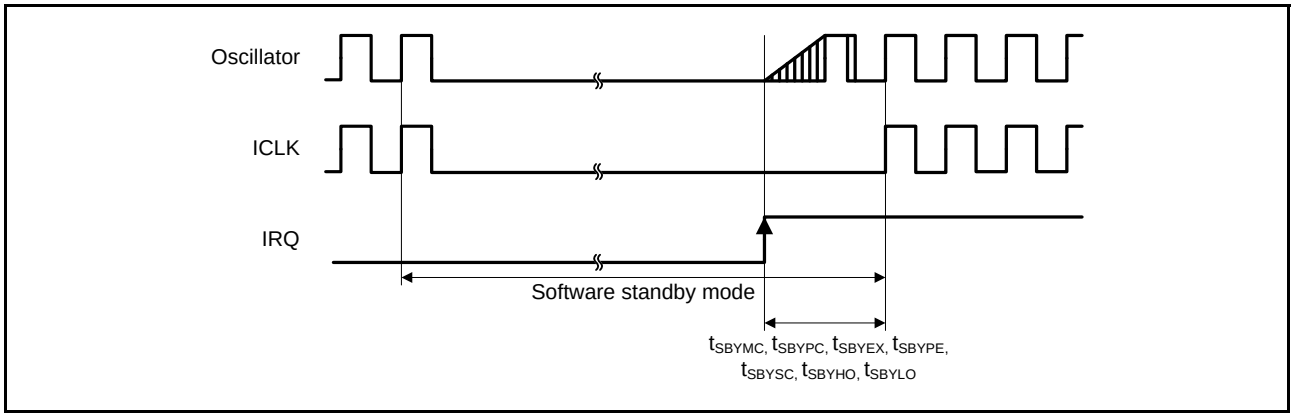

Figure 5.72 Software Standby Mode Cancellation Timing

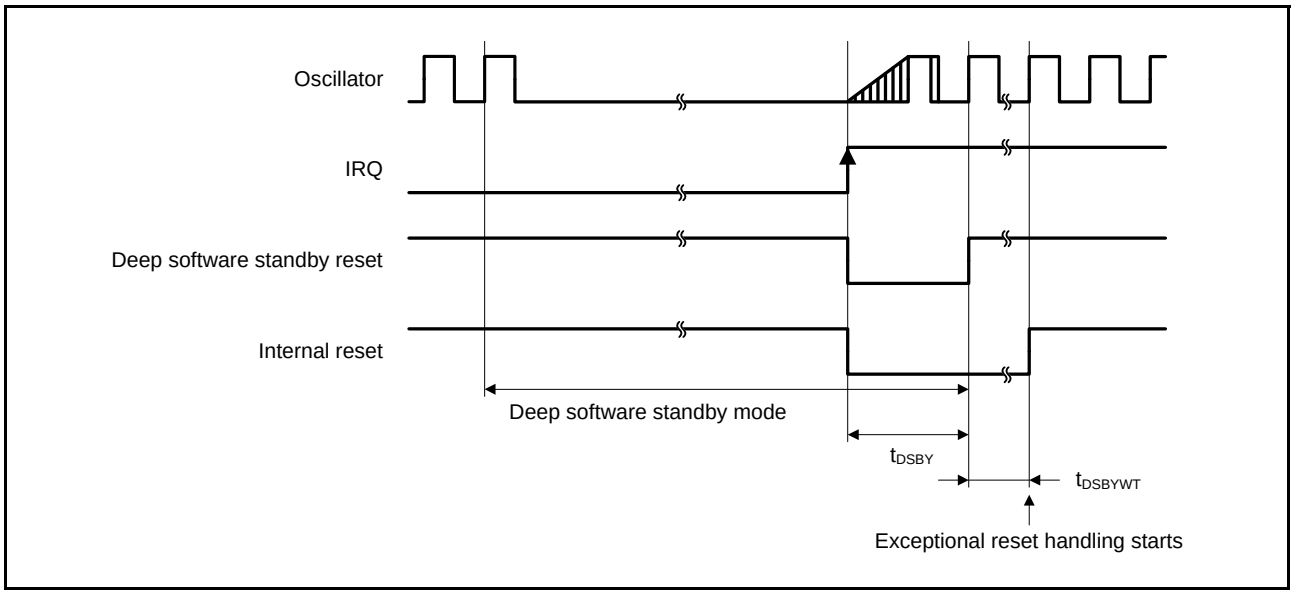

Figure 5.73 Deep Software Standby Mode Cancellation Timing

5.3.4 Control Signal Timing

Table 5.48 Control Signal Timing

Conditions: VCC = AVCC0 = 1.62 to 5.5 V, VSS = AVSS0 = VREFL = VREFL0 = 0 V, T_a = –40 to +105°C

Item	Symbol	Min.	Typ.	Max.	Unit	Test Conditions
NMI pulse width	t_{NMIW}	200	—	—	ns	$t_{c(PCLKB)} \times 2 \leq 200$ ns, Figure 5.74
		$t_{c(PCLKB)} \times 2$	—	—	ns	$t_{c(PCLKB)} \times 2 > 200$ ns, Figure 5.74
IRQ pulse width	t_{IRQW}	200	—	—	ns	$t_{c(PCLKB)} \times 2 \leq 200$ ns, Figure 5.75
		$t_{c(PCLKB)} \times 2$	—	—	ns	$t_{c(PCLKB)} \times 2 > 200$ ns, Figure 5.75

Note: • 200 ns minimum in deep software standby and software standby modes.

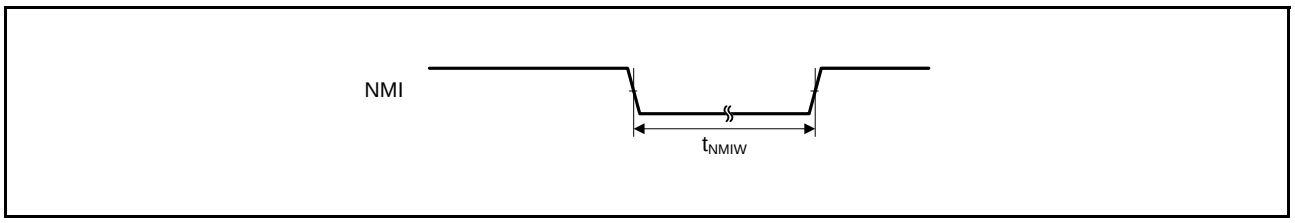

Figure 5.74 NMI Interrupt Input Timing

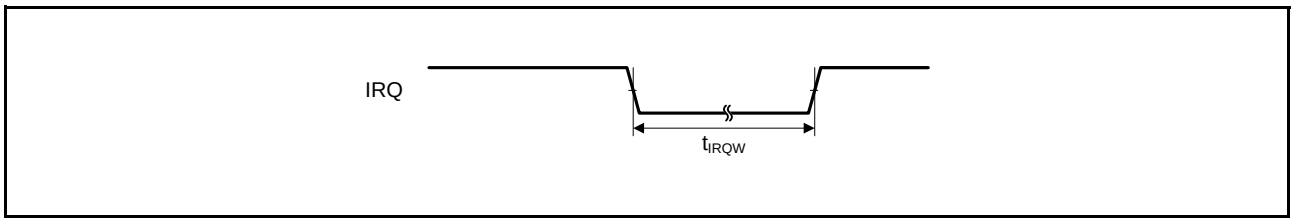

Figure 5.75 IRQ Interrupt Input Timing

5.3.5 Bus Timing

Table 5.49 Bus Timing (1)

Conditions: VCC = AVCC0 = 2.7 to 5.5 V, VSS = AVSS0 = VREFL = VREFL0 = 0 V,
fBCLK ≤ 25 MHz (BCLK pin output frequency ≤ 12.5 MHz), T_a = –40 to +105°C, V_{OH} = VCC × 0.5,
V_{OL} = VCC × 0.5, I_{OH} = –1.0 mA, I_{OL} = 1.0 mA, C_L = 30 pF
When normal output is selected by the drive capacity register

Item	Symbol	Min.	Max.	Unit	Test Conditions
Address delay time	t_{AD}	—	60	ns	Figure 5.76 to Figure 5.79
Byte control delay time	t_{BCD}	—	60	ns	
CS# delay time	t_{CSD}	—	60	ns	
RD# delay time	t_{RSD}	—	60	ns	
Read data setup time	t_{RDS}	40	—	ns	
Read data hold time	t_{RDH}	0	—	ns	
WR# delay time	t_{WRD}	—	60	ns	
Write data delay time	t_{WDD}	—	60	ns	
Write data hold time	t_{WDH}	0	—	ns	
WAIT# setup time	t_{WTS}	40	—	ns	Figure 5.80
WAIT# hold time	t_{WTH}	0	—	ns	

Table 5.50 Bus Timing (2)

Conditions: VCC = AVCC0 = 1.8 to 2.7 V, VSS = AVSS0 = VREFL = VREFL0 = 0 V,
fBCLK ≤ 16 MHz (BCLK pin output frequency ≤ 8 MHz), T_a = –40 to +105°C, V_{OH} = VCC × 0.5,
V_{OL} = VCC × 0.5, I_{OH} = –1.0 mA, I_{OL} = 1.0 mA, C_L = 30 pF
When normal output is selected by the drive capacity register

Item	Symbol	Min.	Max.	Unit	Test Conditions
Address delay time	t_{AD}	—	90	ns	Figure 5.76 to Figure 5.79
Byte control delay time	t_{BCD}	—	90	ns	
CS# delay time	t_{CSD}	—	90	ns	
RD# delay time	t_{RSD}	—	90	ns	
Read data setup time	t_{RDS}	60	—	ns	
Read data hold time	t_{RDH}	0	—	ns	
WR# delay time	t_{WRD}	—	90	ns	
Write data delay time	t_{WDD}	—	90	ns	
Write data hold time	t_{WDH}	0	—	ns	
WAIT# setup time	t_{WTS}	60	—	ns	Figure 5.80
WAIT# hold time	t_{WTH}	0	—	ns	

Table 5.51 Bus Timing (3)

Conditions: VCC = AVCC0 = 1.62 to 1.8 V, VSS = AVSS0 = VREFL = VREFL0 = 0 V,
fBCLK ≤ 12 MHz (BCLK pin output frequency ≤ 6 MHz), T_a = –40 to +105°C, V_{OH} = VCC × 0.5,
V_{OL} = VCC × 0.5, I_{OH} = –0.5 mA, I_{OL} = 0.5 mA, C_L = 30 pF
When normal output is selected by the drive capacity register

Item	Symbol	Min.	Max.	Unit	Test Conditions
Address delay time	t_{AD}	—	125	ns	Figure 5.76 to Figure 5.79
Byte control delay time	t_{BCD}	—	125	ns	
CS# delay time	t_{CSD}	—	125	ns	
RD# delay time	t_{RSD}	—	125	ns	
Read data setup time	t_{RDS}	85	—	ns	
Read data hold time	t_{RDH}	0	—	ns	
WR# delay time	t_{WRD}	—	125	ns	
Write data delay time	t_{WDD}	—	125	ns	
Write data hold time	t_{WDH}	0	—	ns	
WAIT# setup time	t_{WTS}	85	—	ns	Figure 5.80
WAIT# hold time	t_{WTH}	0	—	ns	

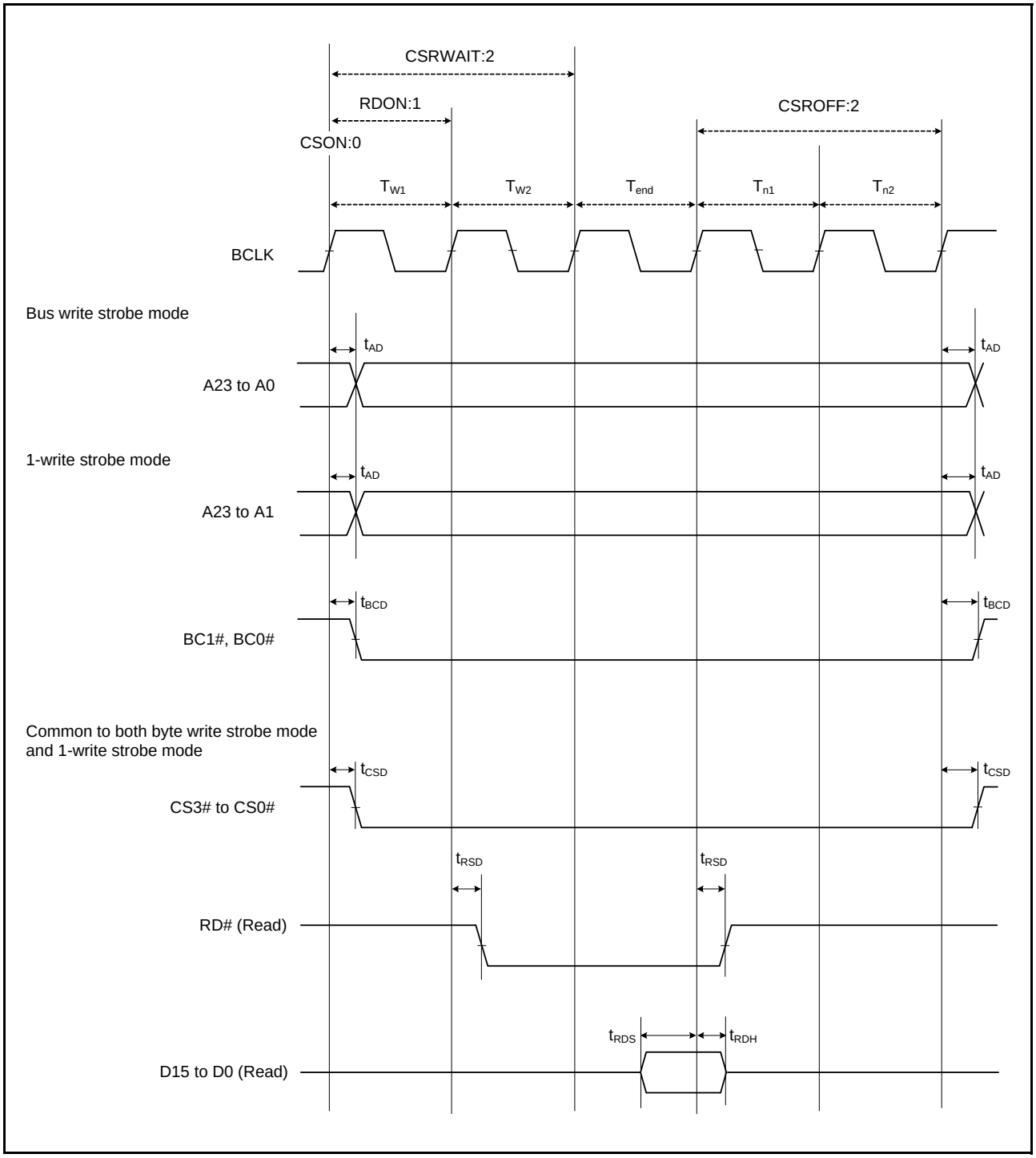

Figure 5.76 External Bus Timing/Normal Read Cycle (Bus Clock Synchronized)

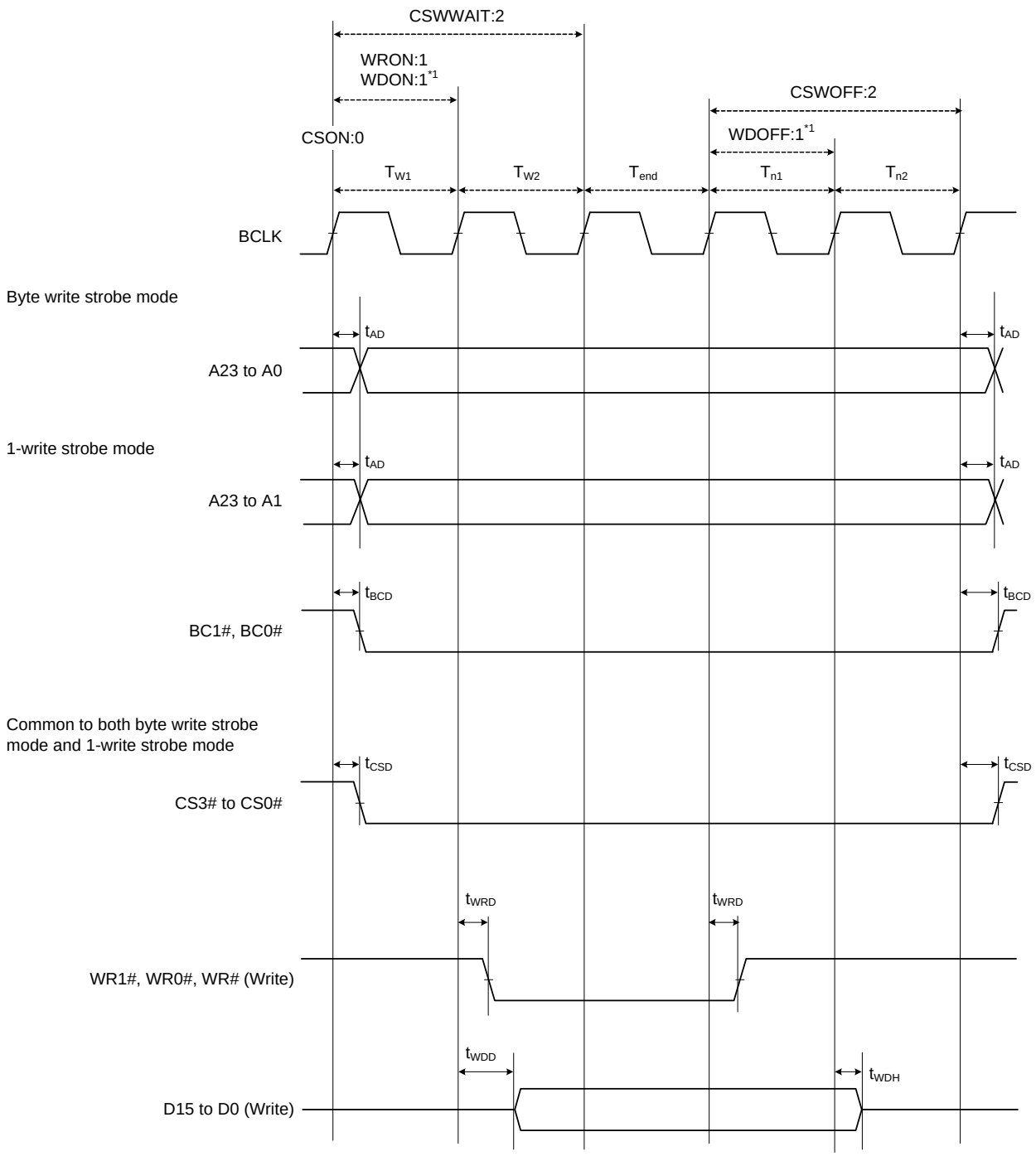

Note 1. Set the values of WDON and WDOFF to 1 or greater.

Figure 5.77 External Bus Timing/Normal Write Cycle (Bus Clock Synchronized)

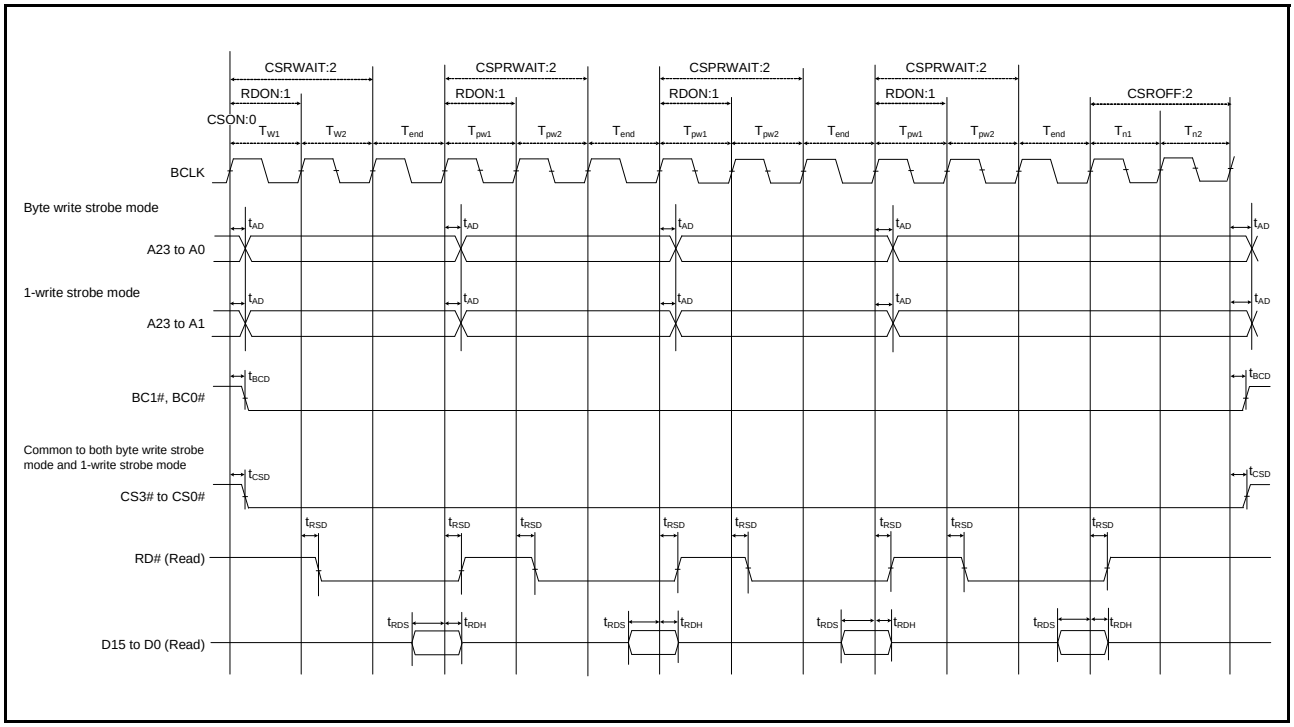

Figure 5.78 External Bus Timing/Page Read Cycle (Bus Clock Synchronized)

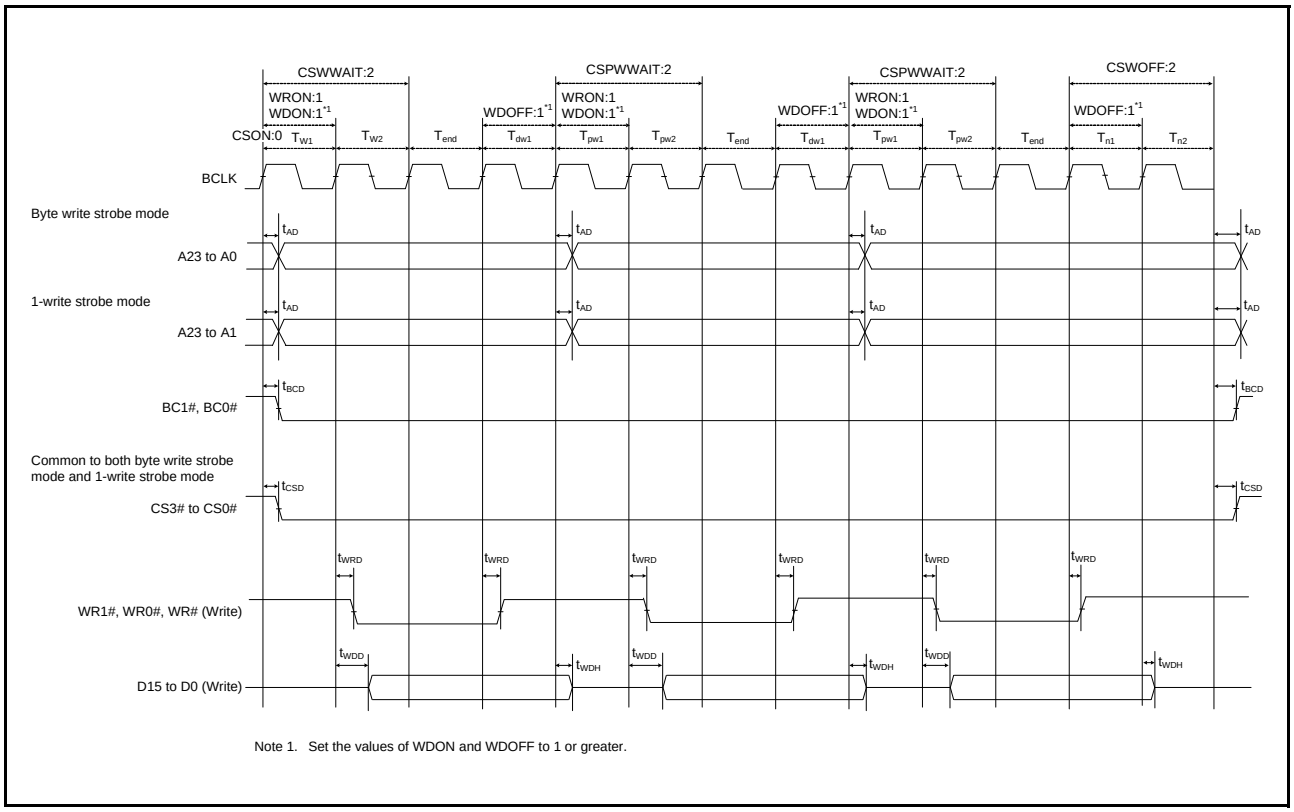

Figure 5.79 External Bus Timing/Page Write Cycle (Bus Clock Synchronized)

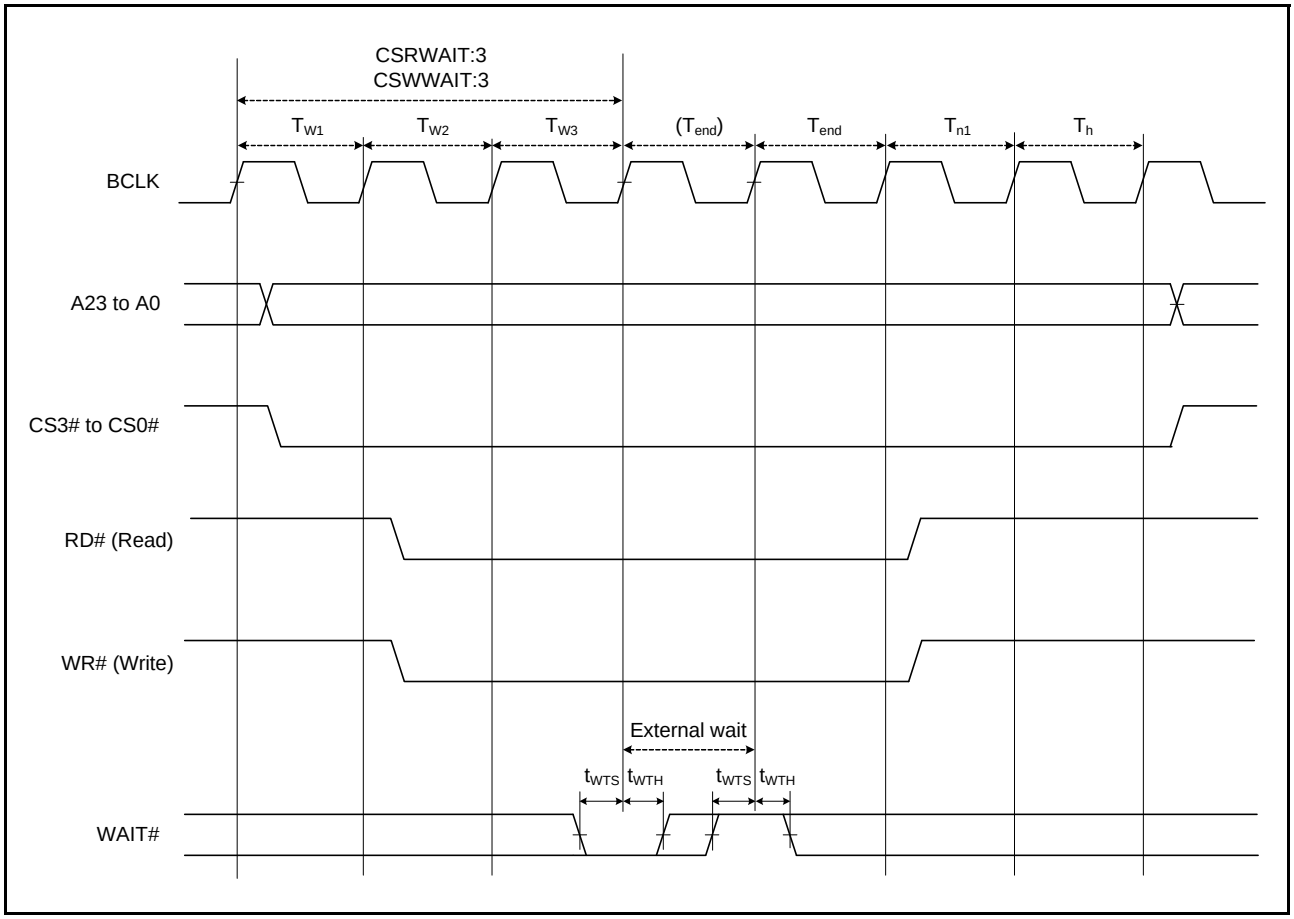

Figure 5.80 External Bus Timing/External Wait Control

Table 5.52 Bus Timing (Multiplexed Bus) (1)

Conditions: VCC = AVCC0 = 2.7 to 5.5 V, VSS = AVSS0 = VREFL = VREFL0 = 0 V,
fBCLK ≤ 25 MHz (BCLK pin output frequency ≤ 12.5 MHz), T_a = –40 to +105°C, V_{OH} = VCC × 0.5,
V_{OL} = VCC × 0.5, I_{OH} = –1.0 mA, I_{OL} = 1.0 mA, C_L = 30 pF
When normal output is selected by the drive capacity register

Item	Symbol	Min.	Typ.	Max.	Unit
Address delay time	t_{AD}	—	60	ns	Figure 5.81 and Figure 5.82
Byte control delay time	t_{BCD}	—	60	ns	
CS# delay time	t_{CSD}	—	60	ns	
RD# delay time	t_{RSD}	—	60	ns	
ALE delay time	t_{ALED}	—	60	ns	
Read data setup time	t_{RDS}	40	—	ns	
Read data hold time	t_{RDH}	0	—	ns	
WR# delay time	t_{WRD}	—	60	ns	
Write data delay time	t_{WDD}	—	60	ns	
Write data hold time	t_{WDH}	0	—	ns	
WAIT# setup time	t_{WTS}	40	—	ns	Figure 5.80
WAIT# hold time	t_{WTH}	0	—	ns	

Table 5.53 Bus Timing (Multiplexed Bus) (2)

Conditions: VCC = AVCC0 = 1.8 to 2.7 V, VSS = AVSS0 = VREFL = VREFL0 = 0 V,
fBCLK ≤ 16 MHz (BCLK pin output frequency ≤ 8 MHz), T_a = –40 to +105°C, V_{OH} = VCC × 0.5,
V_{OL} = VCC × 0.5, I_{OH} = –1.0 mA, I_{OL} = 1.0 mA, C_L = 30 pF
When normal output is selected by the drive capacity register

Item	Symbol	Min.	Typ.	Max.	Unit
Address delay time	t_{AD}	—	90	ns	Figure 5.81 and Figure 5.82
Byte control delay time	t_{BCD}	—	90	ns	
CS# delay time	t_{CSD}	—	90	ns	
RD# delay time	t_{RSD}	—	90	ns	
ALE delay time	t_{ALED}	—	90	ns	
Read data setup time	t_{RDS}	60	—	ns	
Read data hold time	t_{RDH}	0	—	ns	
WR# delay time	t_{WRD}	—	90	ns	
Write data delay time	t_{WDD}	—	90	ns	
Write data hold time	t_{WDH}	0	—	ns	
WAIT# setup time	t_{WTS}	60	—	ns	Figure 5.80
WAIT# hold time	t_{WTH}	0	—	ns	

Table 5.54 Bus Timing (Multiplexed Bus) (3)

Conditions: VCC = AVCC0 = 1.62 to 1.8 V, VSS = AVSS0 = VREFL = VREFL0 = 0 V,
fBCLK ≤ 12 MHz (BCLK pin output frequency ≤ 6 MHz), T_a = –40 to +105°C, V_{OH} = VCC × 0.5,
V_{OL} = VCC × 0.5, I_{OH} = –0.5 mA, I_{OL} = 0.5 mA, C_L = 30 pF
When normal output is selected by the drive capacity register

Item	Symbol	Min.	Typ.	Max.	Unit
Address delay time	t_{AD}	—	125	ns	Figure 5.81 and Figure 5.82
Byte control delay time	t_{BCD}	—	125	ns	
CS# delay time	t_{CSD}	—	125	ns	
RD# delay time	t_{RSD}	—	125	ns	
ALE delay time	t_{ALED}	—	125	ns	
Read data setup time	t_{RDS}	85	—	ns	
Read data hold time	t_{RDH}	0	—	ns	
WR# delay time	t_{WRD}	—	125	ns	
Write data delay time	t_{WDD}	—	125	ns	
Write data hold time	t_{WDH}	0	—	ns	
WAIT# setup time	t_{WTS}	85	—	ns	Figure 5.80
WAIT# hold time	t_{WTH}	0	—	ns	

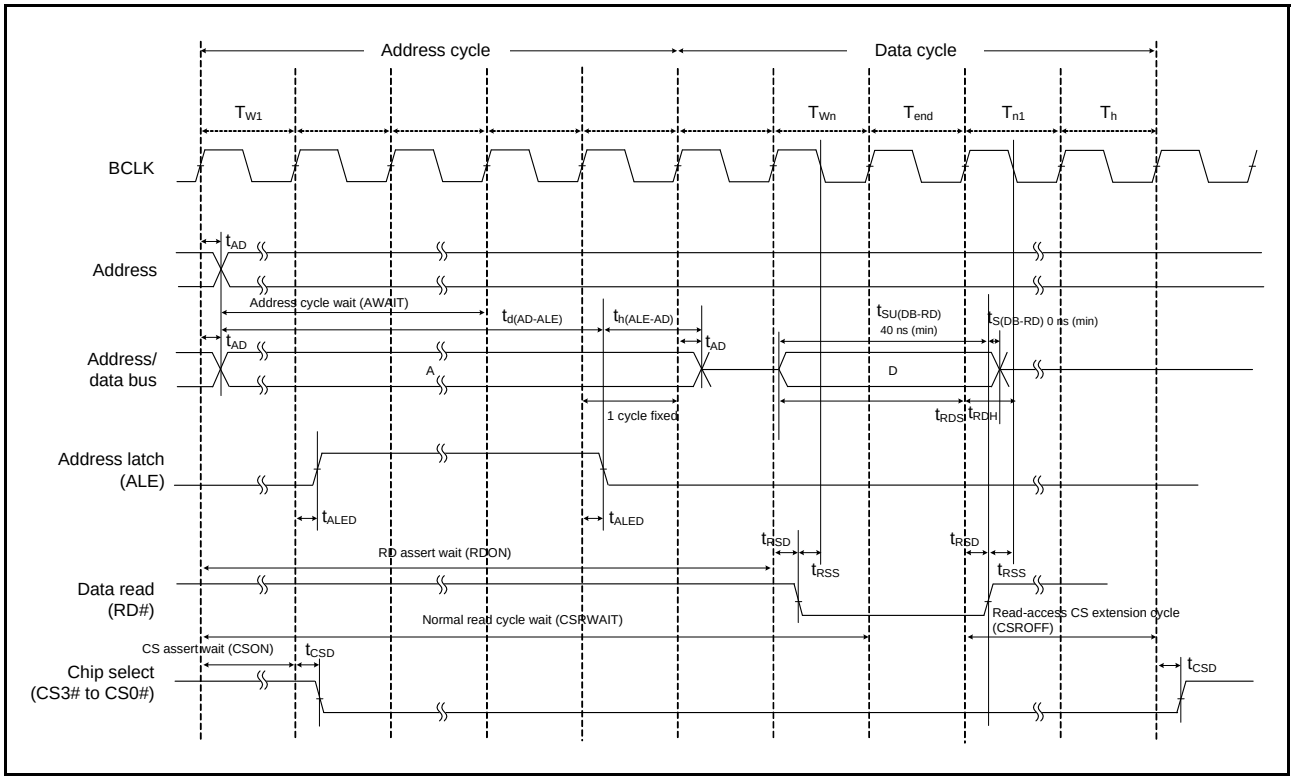

Figure 5.81 Example of Operation in Read Access over the External Bus (Multiplexed)

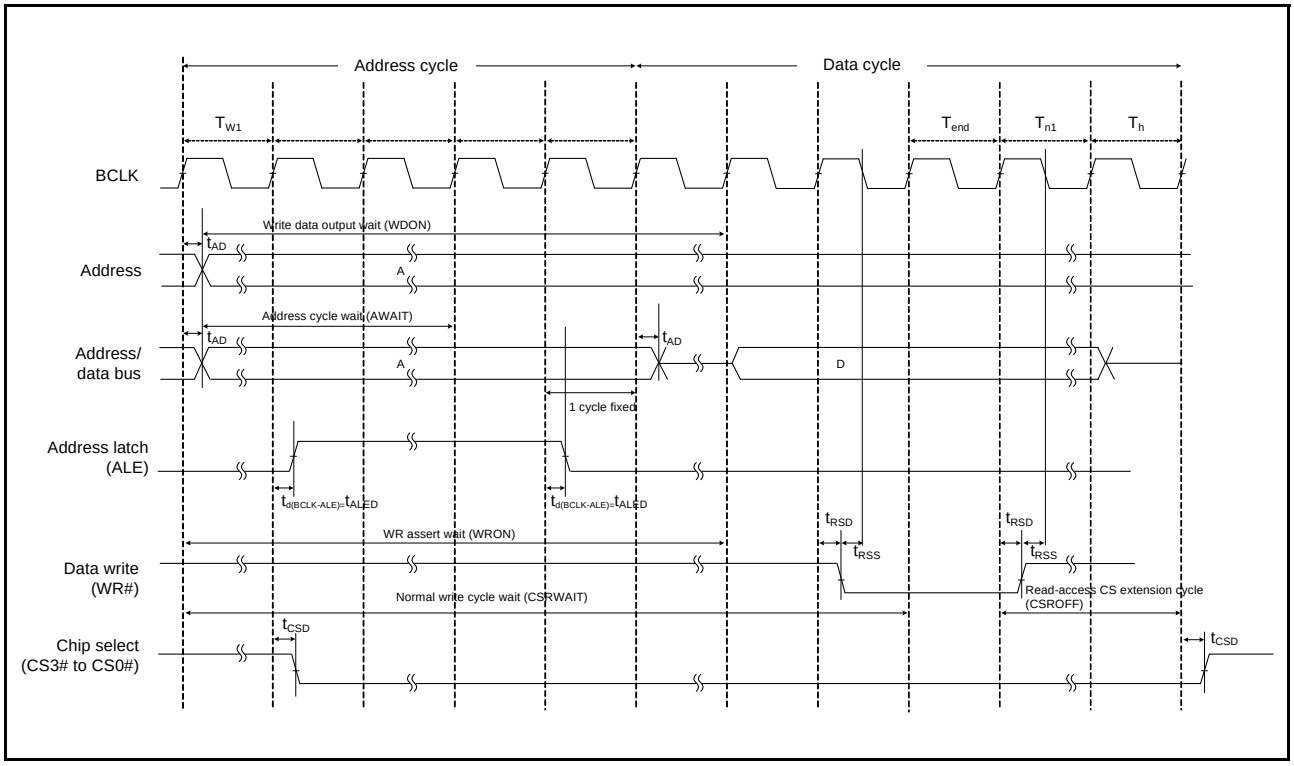

Figure 5.82 Example of Operation in Write Access over the External Bus (Multiplexed)

5.3.6 Timing of On-Chip Peripheral Modules

Table 5.55 Timing of On-Chip Peripheral Modules (1)

Conditions: VCC = AVCC0 = 1.62 to 5.5 V, VSS = AVSS0 = VREFL = VREFL0 = 0 V, T_a = –40 to +105°C
When high-drive output is selected by the drive capacity register

Item			Symbol	Min.	Max.	Unit	Test Conditions
I/O ports	Input data pulse width		t_{PRW}	1.5	—	t_{Pcyc}	Figure 5.83
MTU/ TPU	Input capture input pulse width	Single-edge setting	t_{TICW}	1.5	—	t_{Pcyc}	Figure 5.84
		Both-edge setting		2.5	—		
	Timer clock pulse width	Single-edge setting	t_{TCKWH}, t_{TCKWL}	1.5	—	t_{Pcyc}	Figure 5.85
		Both-edge setting		2.5	—		
		Phase counting mode		2.5	—		
POE	POE# input pulse width		t_{POEW}	1.5	—	t_{Pcyc}	Figure 5.86
8-bit timer	Timer clock pulse width	Single-edge setting	t_{TMCWH}, t_{TMCWL}	1.5	—	t_{Pcyc}	Figure 5.87
		Both-edge setting		2.5	—		
SCI	Input clock cycle	Asynchronous	t_{Scyc}	4	—	t_{Pcyc}	Figure 5.88
		Clock synchronous		6	—		
	Input clock pulse width		t_{SCKW}	0.4	0.6	t_{Scyc}	
	Input clock rise time		t_{SCKr}	—	20	ns	
	Input clock fall time		t_{SCKf}	—	20	ns	
	Output clock cycle	Asynchronous	t_{Scyc}	16	—	t_{Pcyc}	C = 30 pF Figure 5.89
		Clock synchronous		4	—		
	Output clock pulse width	2.7 V ≤ VCC ≤ 5.5 V	t_{SCKW}	0.4	0.6	t_{Scyc}	
		1.8 V ≤ VCC < 2.7 V		0.35	0.65		
		1.62 V ≤ VCC < 1.8 V		0.35	0.65		
	Output clock rise time		t_{SCKr}	—	20	ns	
	Output clock fall time		t_{SCKf}	—	20	ns	
	Transmit data delay time (master)	Clock synchronous	t_{TXD}	—	40	ns	
	Transmit data delay time (slave)	Clock synchronous, 2.7 V ≤ VCC ≤ 5.5 V		—	65	ns	
		Clock synchronous, 1.8 V ≤ VCC < 2.7 V		—	85	ns	
		Clock synchronous, 1.62 V ≤ VCC < 1.8 V		—	95	ns	
	Receive data setup time (master)	Clock synchronous, 2.7 V ≤ VCC ≤ 5.5 V	t_{RXS}	65	—	ns	
		Clock synchronous, 1.8 V ≤ VCC < 2.7 V		75	—	ns	
		Clock synchronous, 1.62 V ≤ VCC < 1.8 V		80	—	ns	
	Receive data setup time (slave)	Clock synchronous		40	—	ns	
	Receive data hold time	Clock synchronous	t_{RXH}	40	—	ns	
A/D converter	Trigger input pulse width		t_{TRGW}	1.5	—	t_{Pcyc}	Figure 5.90
CAC	CACREF input pulse width	$t_{Pcyc} \le t_{cac}$*2	t_{CACREF}	4.5 t_{cac} + 3 t_{Pcyc}	—	ns	
		$t_{Pcyc} > t_{cac}$*2		5 t_{cac} + 6.5 t_{Pcyc}			

Note 1. t_{Pcyc}: PCLK cycle
Note 2. t_{cac}: CAC count clock source cycle

[512 Kbytes or less of flash memory and 48 to 100 pins]

Table 5.56 Timing of On-Chip Peripheral Modules (2)

Conditions: VCC = AVCC0 = 1.62 to 5.5 V, VSS = AVSS0 = VREFL = VREFL0 = 0 V, T_a = –40 to +105°C
When high-drive output is selected by the drive capacity register

Item				Symbol	Min.	Max.	Unit*1	Test Conditions
RSPI	RSPCK clock cycle	Master		t_{SPcyc}	2	4096	t_{Pcyc}	C = 30 pF Figure 5.91
					125	—	ns	
		Slave			8	4096	t_{Pcyc}	
	RSPCK clock high pulse width	Master	2.7 V ≤ VCC ≤ 5.5 V	t_{SPCKWH}	$(t_{SPcyc} - t_{SPCKr} - t_{SPCKf})/2 - 3$	—	ns	
			1.8 V ≤ VCC < 2.7 V		$(t_{SPcyc} - t_{SPCKr} - t_{SPCKf})/2 - 3$	—		
			1.62 V ≤ VCC < 1.8 V		$(t_{SPcyc} - t_{SPCKr} - t_{SPCKf})/2 - 10$	—		
		Slave			$(t_{SPcyc} - t_{SPCKr} - t_{SPCKf})/2$	—		
	RSPCK clock low pulse width	Master	2.7 V ≤ VCC ≤ 5.5 V	t_{SPCKWL}	$(t_{SPcyc} - t_{SPCKr} - t_{SPCKf})/2 - 3$	—	ns	
			1.8 V ≤ VCC < 2.7 V		$(t_{SPcyc} - t_{SPCKr} - t_{SPCKf})/2 - 3$	—		
			1.62 V ≤ VCC < 1.8 V		$(t_{SPcyc} - t_{SPCKr} - t_{SPCKf})/2 - 10$	—		
		Slave			$(t_{SPcyc} - t_{SPCKr} - t_{SPCKf})/2$	—		
	RSPCK clock rise/fall time	Output	2.7 V ≤ VCC ≤ 5.5 V	t_{SPCKr}, t_{SPCKf}	—	10	ns	
			1.8 V ≤ VCC < 2.7 V		—	15		
			1.62 V ≤ VCC < 1.8 V		—	20		
		Input			—	1	μs	
	Data input setup time	Master	2.7 V ≤ VCC ≤ 5.5 V	t_{SU}	50	—	ns	C = 30 pF Figure 5.92 to Figure 5.97
			1.8 V ≤ VCC < 2.7 V		65	—		
			1.62 V ≤ VCC < 1.8 V		75	—		
		Slave			$25 - t_{Pcyc}$	—		
	Data input hold time	Master		t_H	t_{Pcyc}	—	ns	
		Slave			$20 + 2 \times t_{Pcyc}$	—		
	SSL setup time	Master		t_{LEAD}	1	8	t_{SPcyc}	
		Slave			4	—	t_{Pcyc}	
	SSL hold time	Master		t_{LAG}	1	8	t_{SPcyc}	
		Slave			4	—	t_{Pcyc}	
	Data output delay time	Master	2.7 V ≤ VCC ≤ 5.5 V	t_{OD}	—	50	ns	
			1.8 V ≤ VCC < 2.7 V		—	55		
			1.62 V ≤ VCC < 1.8 V		—	60		
		Slave	2.7 V ≤ VCC ≤ 5.5 V		—	$3 \times t_{Pcyc} + 65$		
			1.8 V ≤ VCC < 2.7 V		—	$3 \times t_{Pcyc} + 85$		
			1.62 V ≤ VCC < 1.8 V		—	$3 \times t_{Pcyc} + 95$		
	Data output hold time	Master		t_{OH}	0	—	ns	
		Slave			0	—		
	Successive transmission delay time	Master		t_{TD}	$t_{SPcyc} + 2 \times t_{Pcyc}$	$8 \times t_{SPcyc} + 2 \times t_{Pcyc}$	ns	
		Slave			$4 \times t_{Pcyc}$	—		

Item				Symbol	Min.	Max.	Unit*1	Test Conditions
RSPI	MOSI and MISO rise/fall time	Output		t_{Dr}, t_{Df}	—	20	ns	C = 30 pF Figure 5.92 to Figure 5.97
		Input			—	1	μs	
	SSL rise/fall time	Output		t_{SSLr}, t_{SSLf}	—	20	ns	
		Input			—	1	μs	
	Slave access time		2.7 V ≤ VCC ≤ 5.5 V	t_{SA}	—	6	t_{Pcyc}	C = 30 pF Figure 5.96 and Figure 5.97
			1.8 V ≤ VCC < 2.7 V		—	7		
			1.62 V ≤ VCC < 1.8 V		—	7		
	Slave output release time		2.7 V ≤ VCC ≤ 5.5 V	t_{REL}	—	5	t_{Pcyc}	
			1.8 V ≤ VCC < 2.7 V		—	6		
			1.62 V ≤ VCC < 1.8 V		—	6		

Note 1. t_{Pcyc}: PCLK cycle

[768 Kbytes/1 Mbyte of flash memory or 144/145 pins]

Table 5.57 Timing of On-Chip Peripheral Modules (3)

Conditions: VCC = AVCC0 = 1.62 to 5.5 V, VSS = AVSS0 = VREFL = VREFL0 = 0 V, T_a = –40 to +105°C
When high-drive output is selected by the drive capacity register

Item				Symbol	Min.	Max.	Unit*1	Test Conditions
RSPI	RSPCK clock cycle	Master		t_{SPcyc}	2	4096	t_{Pcyc}	C = 30pF Figure 5.91
		Slave			8	4096		
	RSPCK clock high pulse width	Master	2.7 V ≤ VCC ≤ 5.5 V	t_{SPCKWH}	$(t_{SPcyc} – t_{SPCKr} – t_{SPCKf})/2 – 3$	—	ns	
			1.8 V ≤ VCC < 2.7 V		$(t_{SPcyc} – t_{SPCKr} – t_{SPCKf})/2 – 3$	—		
			1.62 V ≤ VCC < 1.8 V		$(t_{SPcyc} – t_{SPCKr} – t_{SPCKf})/2 – 10$	—		
		Slave			$(t_{SPcyc} – t_{SPCKr} – t_{SPCKf})/2$	—		
	RSPCK clock low pulse width	Master	2.7 V ≤ VCC ≤ 5.5 V	t_{SPCKWL}	$(t_{SPcyc} – t_{SPCKr} – t_{SPCKf})/2 – 3$	—	ns	
			1.8 V ≤ VCC < 2.7 V		$(t_{SPcyc} – t_{SPCKr} – t_{SPCKf})/2 – 3$	—		
			1.62 V ≤ VCC < 1.8 V		$(t_{SPcyc} – t_{SPCKr} – t_{SPCKf})/2 – 10$	—		
		Slave			$(t_{SPcyc} – t_{SPCKr} – t_{SPCKf})/2$	—		
	RSPCK clock rise/fall time	Output	2.7 V ≤ VCC ≤ 5.5 V	t_{SPCKr}, t_{SPCKf}	—	10	ns	
			1.8 V ≤ VCC < 2.7 V		—	15		
			1.62 V ≤ VCC < 1.8 V		—	20		
		Input			—	1	μs	

Item				Symbol	Min.	Max.	Unit*1	Test Conditions
RSPI	Data input setup time	Master	2.7 V ≤ VCC ≤ 5.5 V	t_{SU}	10	—	ns	C = 30pF Figure 5.92 to Figure 5.97
			1.8 V ≤ VCC < 2.7 V		25	—		
			1.62 V ≤ VCC < 1.8 V		30	—		
		Slave			25 – t_{Pcyc}	—		
	Data input hold time	Master	PCLKB set to a division ratio other than divided by 2	t_H	t_{Pcyc}	—	ns	
			PCLKB set to divided by 2*2	t_{HF}	0	—		
		Slave		t_H	20 + 2 × t_{Pcyc}	—		
	SSL setup time	Master		t_{LEAD}	1	8	t_{SPcyc}	
		Slave			4	—	t_{Pcyc}	
	SSL hold time	Master		t_{LAG}	1	8	t_{SPcyc}	
		Slave			4	—	t_{Pcyc}	
	Data output delay time	Master	2.7 V ≤ VCC ≤ 5.5 V	t_{OD}	—	14	ns	
			1.8 V ≤ VCC < 2.7 V		—	20		
			1.62 V ≤ VCC < 1.8 V		—	25		
		Slave	2.7 V ≤ VCC ≤ 5.5 V		—	3 × t_{Pcyc} + 65		
			1.8 V ≤ VCC < 2.7 V		—	3 × tPcyc +85		
			1.62 V ≤ VCC < 1.8 V		—	3 × tPcyc +95		
	Data output hold time	Master		t_{OH}	0	—	ns	
		Slave			0	—		
	Successive transmission delay time	Master		t_{TD}	t_{SPcyc} + 2 × t_{Pcyc}	8 × t_{SPcyc} + 2 × t_{Pcyc}	ns	
		Slave			4 × t_{Pcyc}	—		
	MOSI and MISO rise/ fall time	Output	2.7 V ≤ VCC ≤ 5.5 V	t_{Dr}, t_{Df}	—	10	ns	
			1.8 V ≤ VCC < 2.7 V		—	15		
			1.62 V ≤ VCC < 1.8 V		—	20		
		Input			—	1	μs	
	SSL rise/fall time	Output	2.7 V ≤ VCC ≤ 5.5 V	t_{SSLr}, t_{SSLf}	—	10	ns	
			1.8 V ≤ VCC < 2.7 V		—	15		
			1.62 V ≤ VCC < 1.8 V		—	20		
		Input			—	1	μs	
	Slave access time		2.7 V ≤ VCC ≤ 5.5 V	t_{SA}	—	6	t_{Pcyc}	C = 30pF Figure 5.96 and Figure 5.97
			1.8 V ≤ VCC < 2.7 V		—	7		
			1.62 V ≤ VCC < 1.8 V		—	7		
	Slave output release time		2.7 V ≤ VCC ≤ 5.5 V	t_{REL}	—	5	t_{Pcyc}	
			1.8 V ≤ VCC < 2.7 V		—	6		
			1.62 V ≤ VCC < 1.8 V		—	6		

Note 1. t_{Pcyc}: PCLK cycle
Note 2. Divided by 2 can be set only in packages with 768 Kbytes/1 Mbyte of flash memory or 144/145 pins.

Table 5.58 Timing of On-Chip Peripheral Modules (4)

Conditions: VCC = AVCC0 = 1.62 to 5.5 V, VSS = AVSS0 = VREFL = VREFL0 = 0 V, T_a = –40 to +105°C
When high-drive output is selected by the drive capacity register

Item			Symbol	Min.	Max.	Unit*1	Test Conditions
Simple SPI	SCK clock cycle output (master)		t_{SPcyc}	4	65536	t_{Pcyc}	C = 30 pF Figure 5.91
	SCK clock cycle input (slave)			6	65536		
	SCK input clock high pulse width		t_{SPCKWH}	0.4	0.6	t_{SPcyc}	
	SCK input clock low pulse width		t_{SPCKWL}	0.4	0.6	t_{SPcyc}	
	SCK output clock high pulse width	2.7 V ≤ VCC ≤ 5.5 V	t_{SPCKWH}	0.4	0.6	t_{SPcyc}	
		1.8 V ≤ VCC < 2.7 V		0.35	0.65		
		1.62 V ≤ VCC < 1.8 V		0.35	0.65		
	SCK output clock low pulse width	2.7 V ≤ VCC ≤ 5.5 V	t_{SPCKWL}	0.4	0.6	t_{SPcyc}	
		1.8 V ≤ VCC < 2.7 V		0.35	0.65		
		1.62 V ≤ VCC < 1.8 V		0.35	0.65		
	SCK clock rise/fall time		t_{SPCKr}, t_{SPCKf}	—	20	ns	
	Data input setup time (Master)	2.7 V ≤ VCC ≤ 5.5 V	t_{SU}	65	—	ns	C = 30 pF Figure 5.92 to Figure 5.97
		1.8 V ≤ VCC < 2.7 V		75	—		
		1.62 V ≤ VCC < 1.8 V		80	—		
	Data input setup time (Slave)			40	—		
	Data input hold time		t_H	40	—	ns	
	SS input setup time		t_{LEAD}	6	—	t_{Pcyc}	
	SS input hold time		t_{LAG}	6	—	t_{Pcyc}	
	Data output delay time (Master)		t_{OD}	—	40	ns	
	Data output delay time (Slave)	2.7 V ≤ VCC ≤ 5.5 V		—	65		
		1.8 V ≤ VCC < 2.7 V		—	85		
		1.62 V ≤ VCC < 1.8 V		—	95		
	Data output hold time		t_{OH}	–10	—	ns	
	Data rise/fall time		t_{Dr}, t_{Df}	—	20	ns	
	SS input rise/fall time		t_{SSLr}, t_{SSLf}	—	20	ns	
	Slave access time		t_{SA}	—	6	t_{Pcyc}	C = 30 pF Figure 5.96 and Figure 5.97
	Slave output release time		t_{REL}	—	6	t_{Pcyc}	

Note 1. t_{Pcyc}: PCLK cycle

Table 5.59 Timing of On-Chip Peripheral Modules (5)

Conditions: VCC = AVCC0 = 2.7 to 5.5 V, VSS = AVSS0 = VREFL = VREFL0 = 0 V, fPCLKB = up to 32 MHz, T_a = –40 to +105°C

Item		Symbol	Min.*1,*2	Max.	Unit	Test Conditions
RIIC (Standard mode, SMBus)	SCL input cycle time	t_{SCL}	6 (12) × t_{IICcyc} + 1300	—	ns	Figure 5.98
	SCL input high pulse width	t_{SCLH}	3 (6) × t_{IICcyc} + 300	—	ns	
	SCL input low pulse width	t_{SCLL}	3 (6) × t_{IICcyc} + 300	—	ns	
	SCL, SDA input rise time	t_{Sr}	—	1000	ns	
	SCL, SDA input fall time	t_{Sf}	—	300	ns	
	SCL, SDA input spike pulse removal time	t_{SP}	0	1 (4) × t_{IICcyc}	ns	
	SDA input bus free time	t_{BUF}	3 (6) × t_{IICcyc} + 300	—	ns	
	Start condition input hold time	t_{STAH}	t_{IICcyc} + 300	—	ns	
	Restart condition input setup time	t_{STAS}	1000	—	ns	
	Stop condition input setup time	t_{STOS}	1000	—	ns	
	Data input setup time	t_{SDAS}	t_{IICcyc} + 50	—	ns	
	Data input hold time	t_{SDAH}	0	—	ns	
	SCL, SDA capacitive load	C_b	—	400	pF	
RIIC (Fast mode)	SCL input cycle time	t_{SCL}	6 (12) × t_{IICcyc} + 600	—	ns	Figure 5.98
	SCL input high pulse width	t_{SCLH}	3 (6) × t_{IICcyc} + 300	—	ns	
	SCL input low pulse width	t_{SCLL}	3 (6) × t_{IICcyc} + 300	—	ns	
	SCL, SDA input rise time	t_{Sr}	20 + 0.1C_b	300	ns	
	SCL, SDA input fall time	t_{Sf}	20 + 0.1C_b	300	ns	
	SCL, SDA input spike pulse removal time	t_{SP}	0	1 (4) × t_{IICcyc}	ns	
	SDA input bus free time	t_{BUF}	3 (6) × t_{IICcyc} + 300	—	ns	
	Start condition input hold time	t_{STAH}	t_{IICcyc} + 300	—	ns	
	Restart condition input setup time	t_{STAS}	300	—	ns	
	Stop condition input setup time	t_{STOS}	300	—	ns	
	Data input setup time	t_{SDAS}	t_{IICcyc} + 50	—	ns	
	Data input hold time	t_{SDAH}	0	—	ns	
	SCL, SDA capacitive load	C_b	—	400	pF	

Note: • t_{IICcyc}: RIIC internal reference count clock (IICφ) cycle

Note 1. The value in parentheses is used when the ICMR3.NF[1:0] bits are set to 11b while a digital filter is enabled with the ICFER.NFE bits = 1.

Note 2. C_b indicates the total capacity of the bus line.

Table 5.60 Timing of On-Chip Peripheral Modules (6)

Conditions: VCC = AVCC0 = 2.7 to 5.5 V, VSS = AVSS0 = VREFL = VREFL0 = 0 V, fPCLKB = up to 32 MHz,
T_a = –40 to +105°C
When high-drive output is selected by the drive capacity register

Item		Symbol	Min.*1	Max.	Unit	Test Conditions
Simple IIC (Standard mode)	SDA input rise time	t_{Sr}	—	1000	ns	Figure 5.98
	SDA input fall time	t_{Sf}	—	300	ns	
	SDA input spike pulse removal time	t_{SP}	0	4 × t_{pcyc}*2	ns	
	Data input setup time	t_{SDAS}	250	—	ns	
	Data input hold time	t_{SDAH}	0	—	ns	
	SCL, SDA capacitive load	C_b	—	400	pF	
Simple IIC (Fast mode)	SCL, SDA input rise time	t_{Sr}	20 + 0.1C_b	300	ns	Figure 5.98
	SCL, SDA input fall time	t_{Sf}	20 + 0.1C_b	300	ns	
	SCL, SDA input spike pulse removal time	t_{SP}	0	4 × t_{pcyc}*2	ns	
	Data input setup time	t_{SDAS}	100	—	ns	
	Data input hold time	t_{SDAH}	0	—	ns	
	SCL, SDA capacitive load	C_b	—	400	pF	

Note: • t_{Pcyc}: PCLK cycle
Note 1. C_b indicates the total capacity of the bus line.
Note 2. This applies when the SMR.CKS[1:0] bits = 00b and the SNFR.NFCS[2:0] bits = 010b while the SNFR.NFE bit = 1 and the digital filter is enabled.

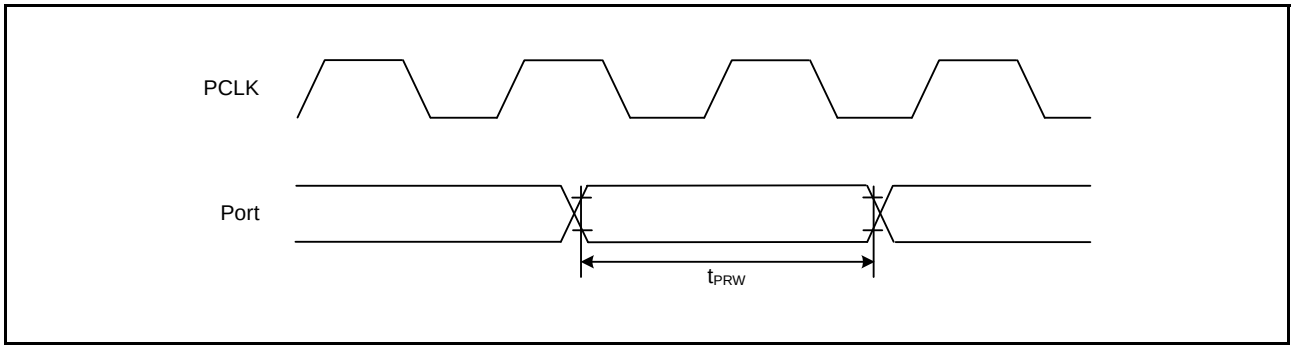

Figure 5.83 I/O Port Input Timing

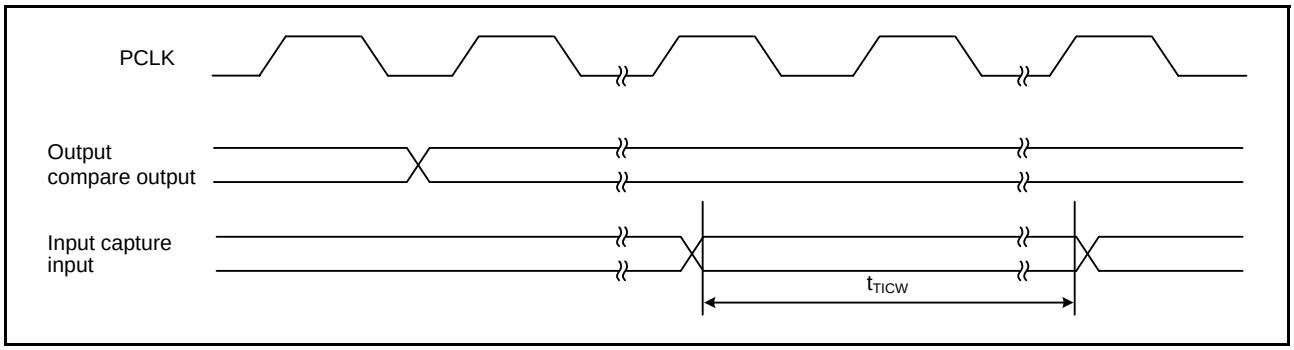

Figure 5.84 MTU/TPU Input/Output Timing

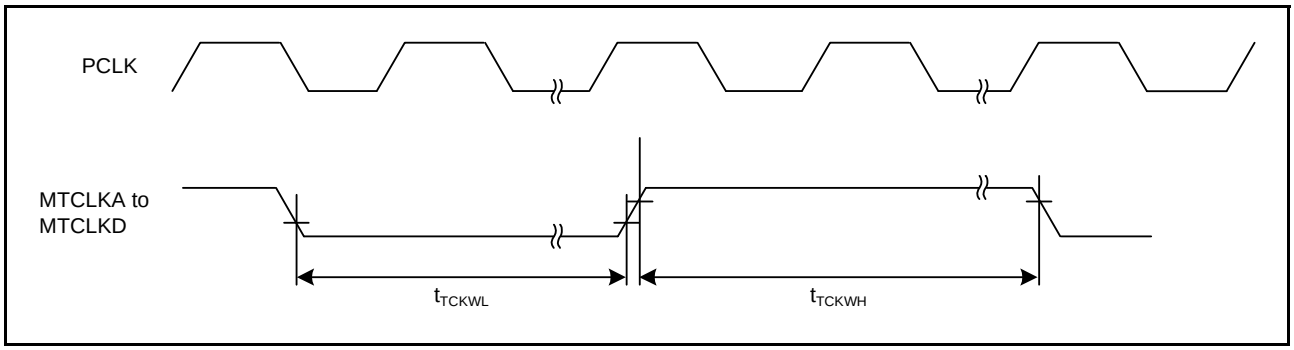

Figure 5.85 MTU/TPU Clock Input Timing

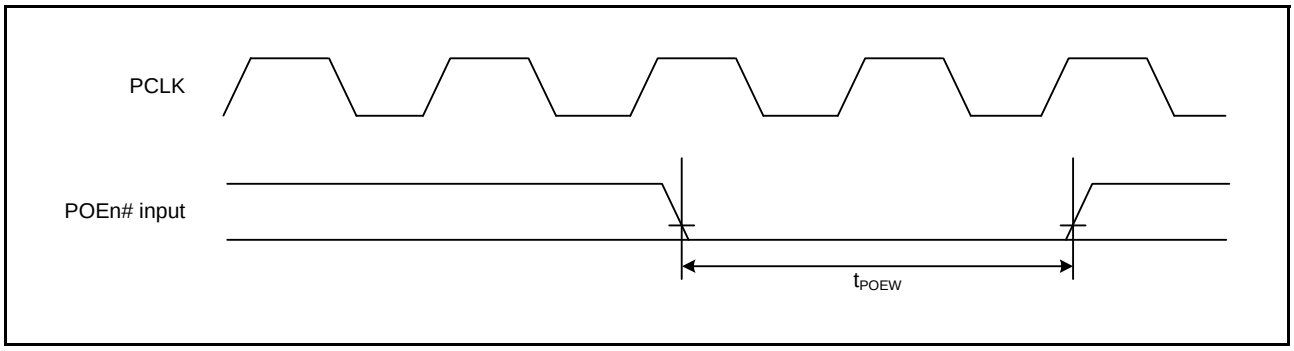

Figure 5.86 POE# Input Timing

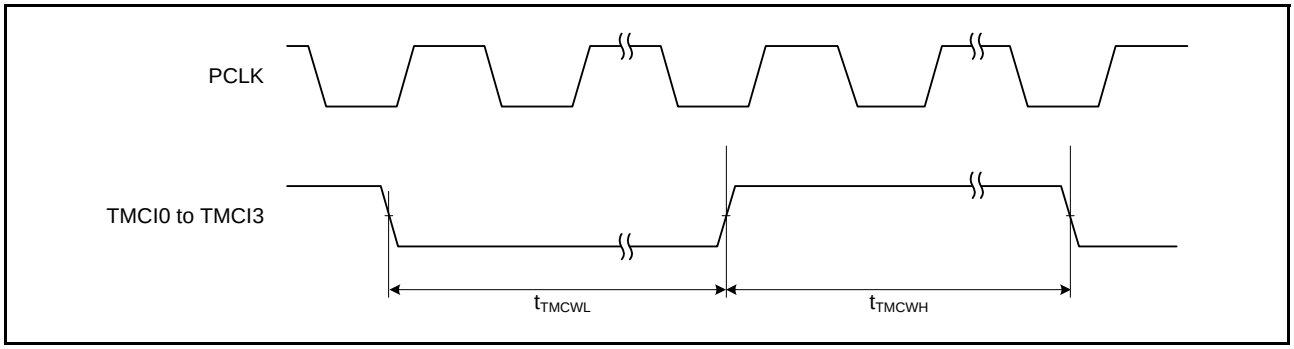

Figure 5.87 8-Bit Timer Clock Input Timing

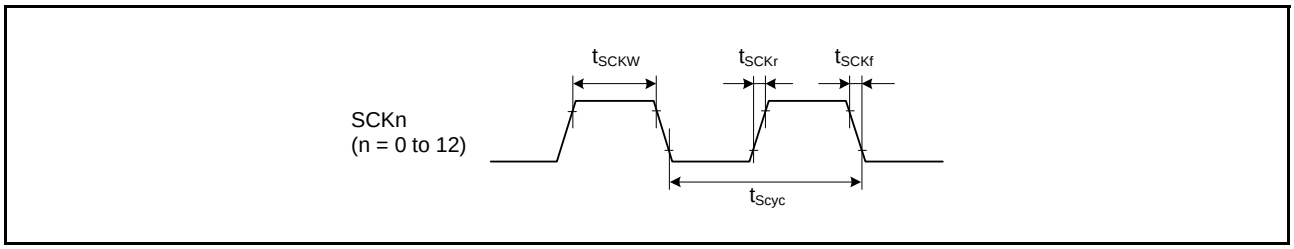

Figure 5.88 SCK Clock Input Timing

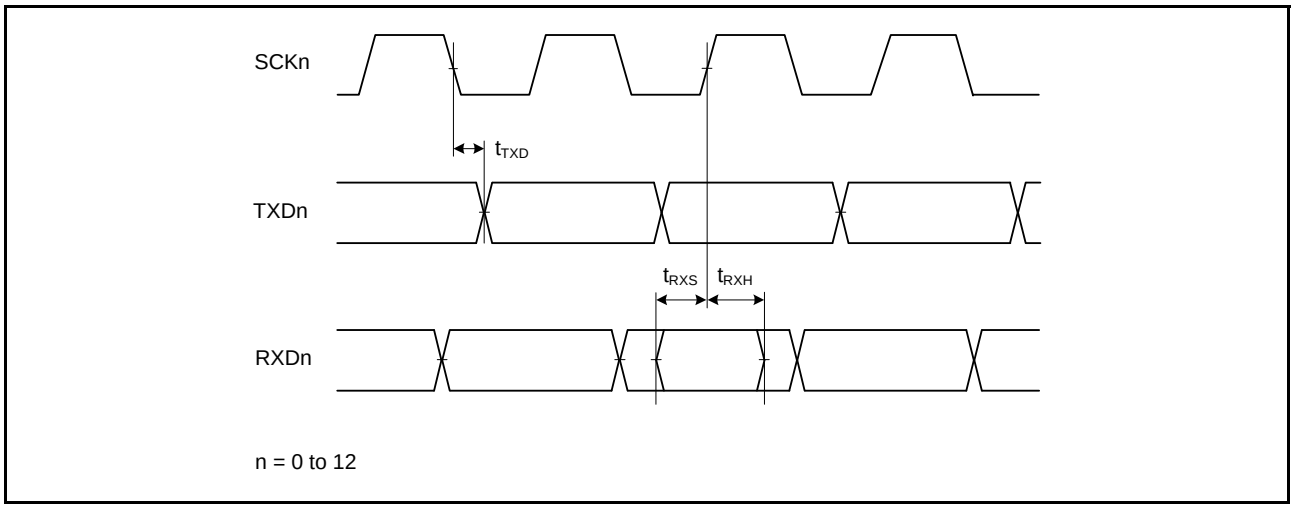

Figure 5.89 SCI Input/Output Timing: Clock Synchronous Mode

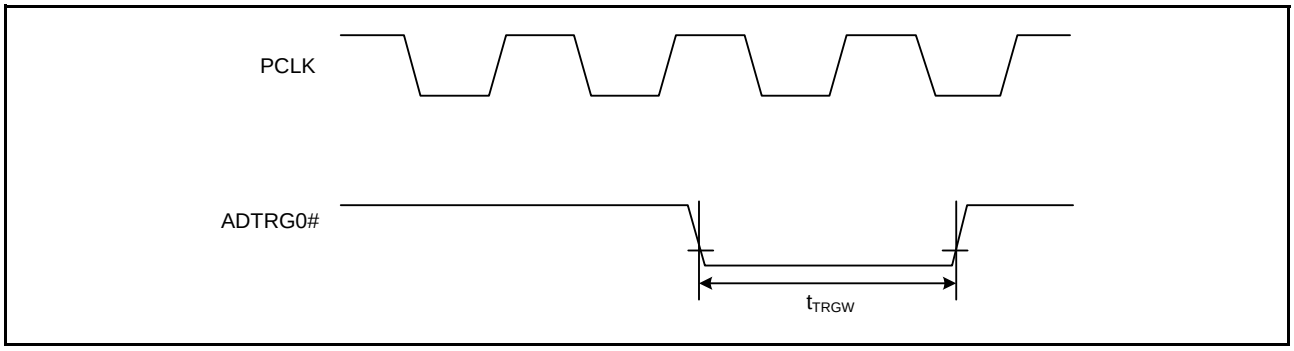

Figure 5.90 A/D Converter External Trigger Input Timing

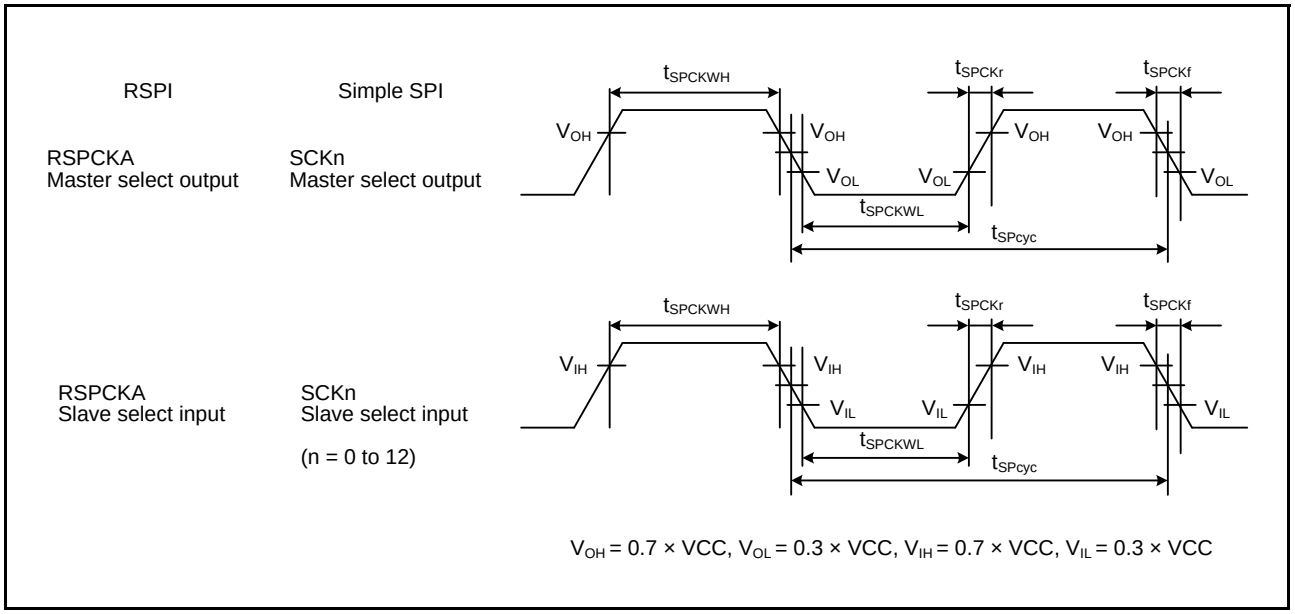

Figure 5.91 RSPI Clock Timing and Simple SPI Clock Timing

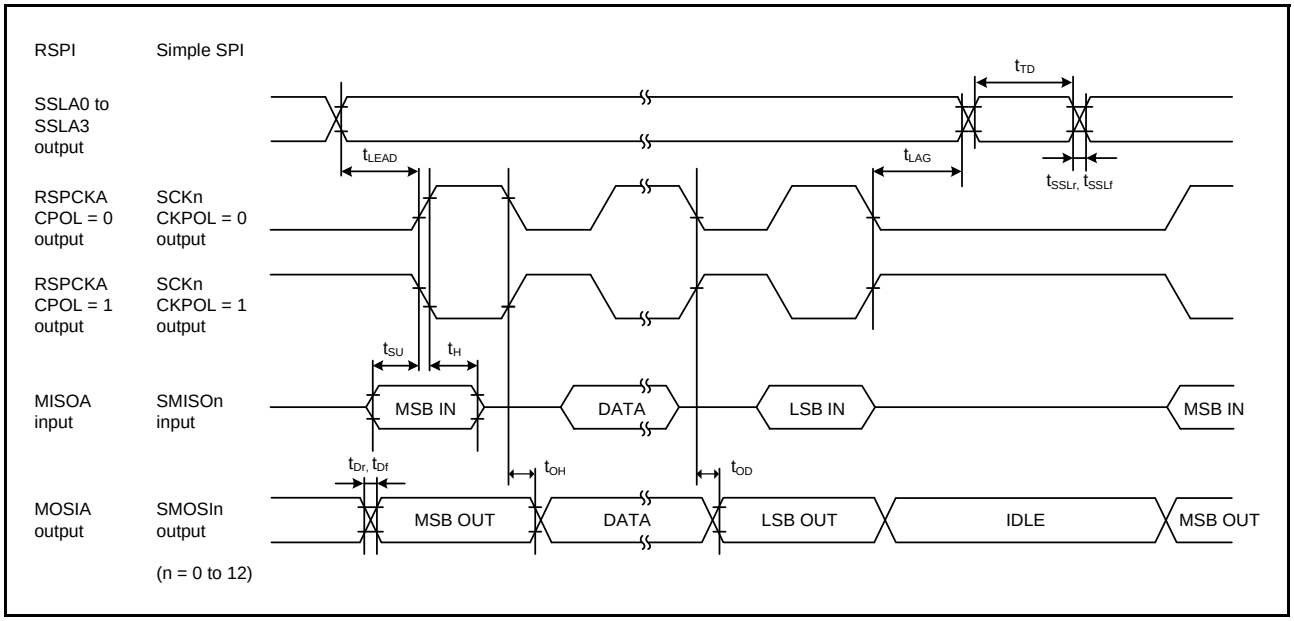

Figure 5.92 RSPI Timing (Master, CPHA = 0) (Bit Rate: PCLKB Set to Division Ratio Other Than Divided by 2) and Simple SPI Timing (Master, CKPH = 1)

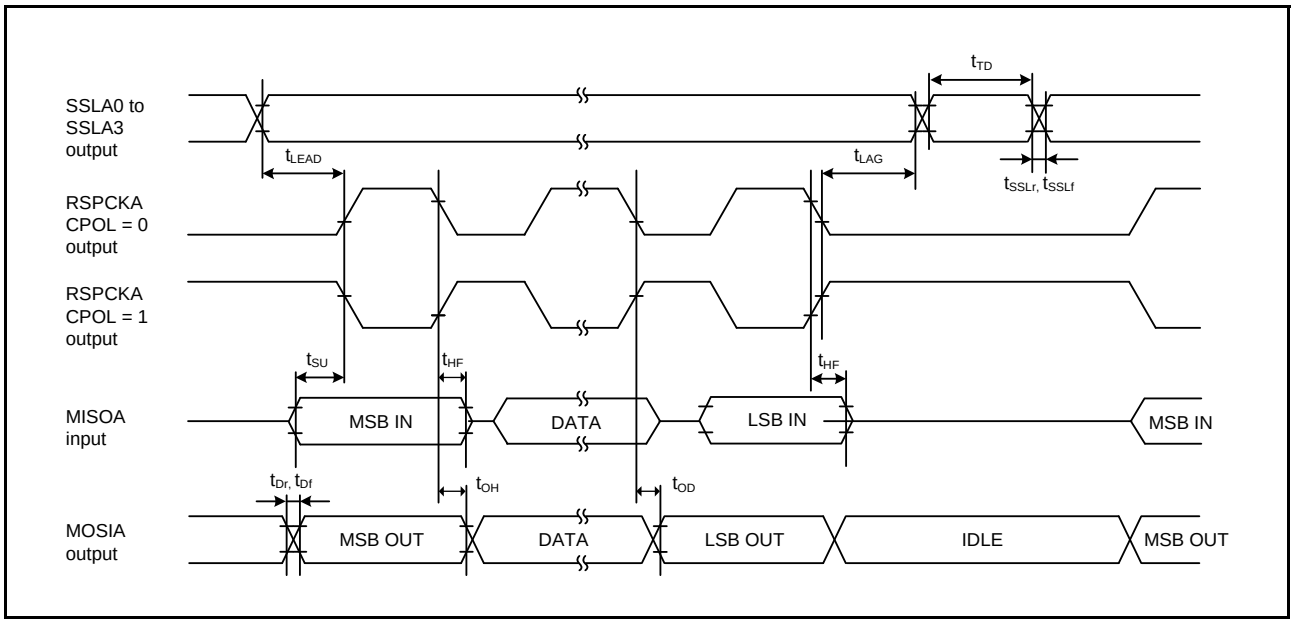

Figure 5.93 RSPI Timing (Master, CPHA = 0) (Bit Rate: PCLKB Set to Divided by 2)

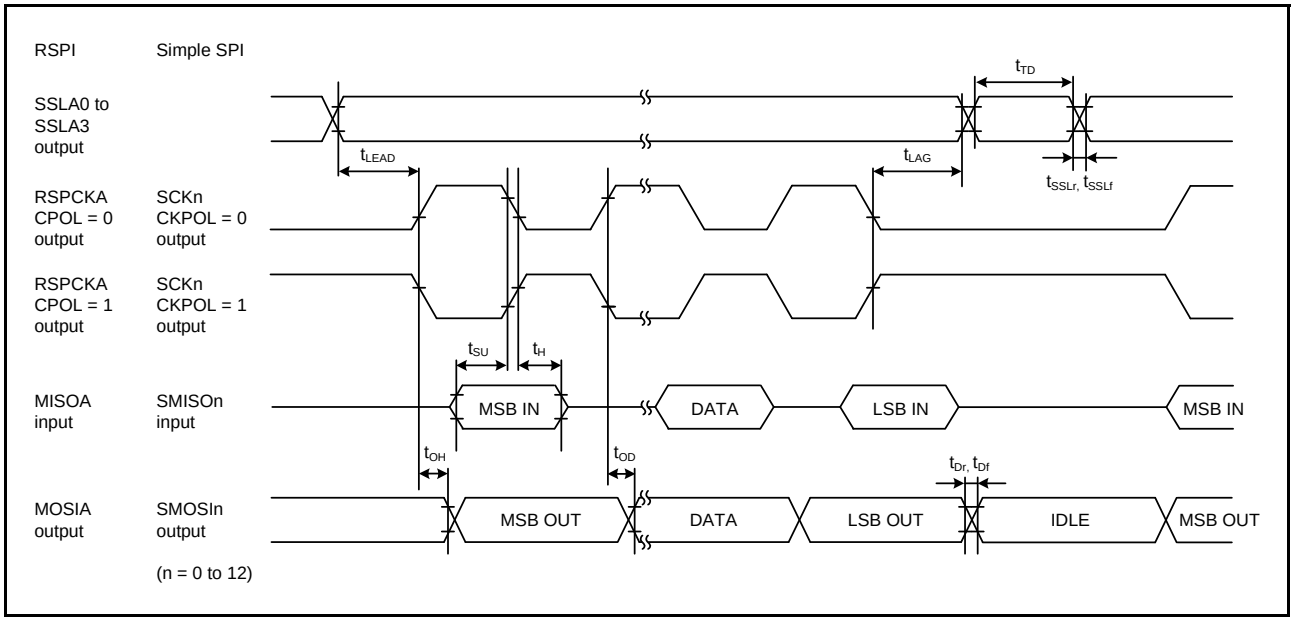

Figure 5.94 RSPI Timing (Master, CPHA = 1) (Bit Rate: PCLKB Set to Division Ratio Other Than Divided by 2) and Simple SPI Timing (Master, CKPH = 0)

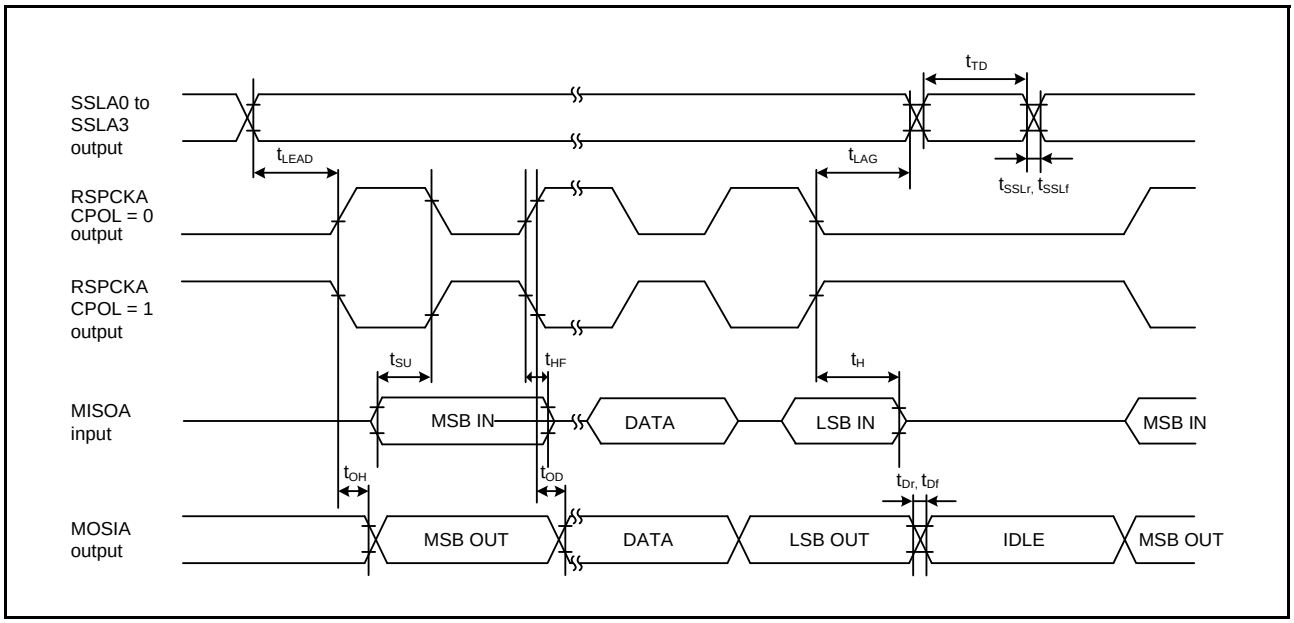

Figure 5.95 RSPI Timing (Master, CPHA = 1) (Bit Rate: PCLKB Set to Divided by 2)

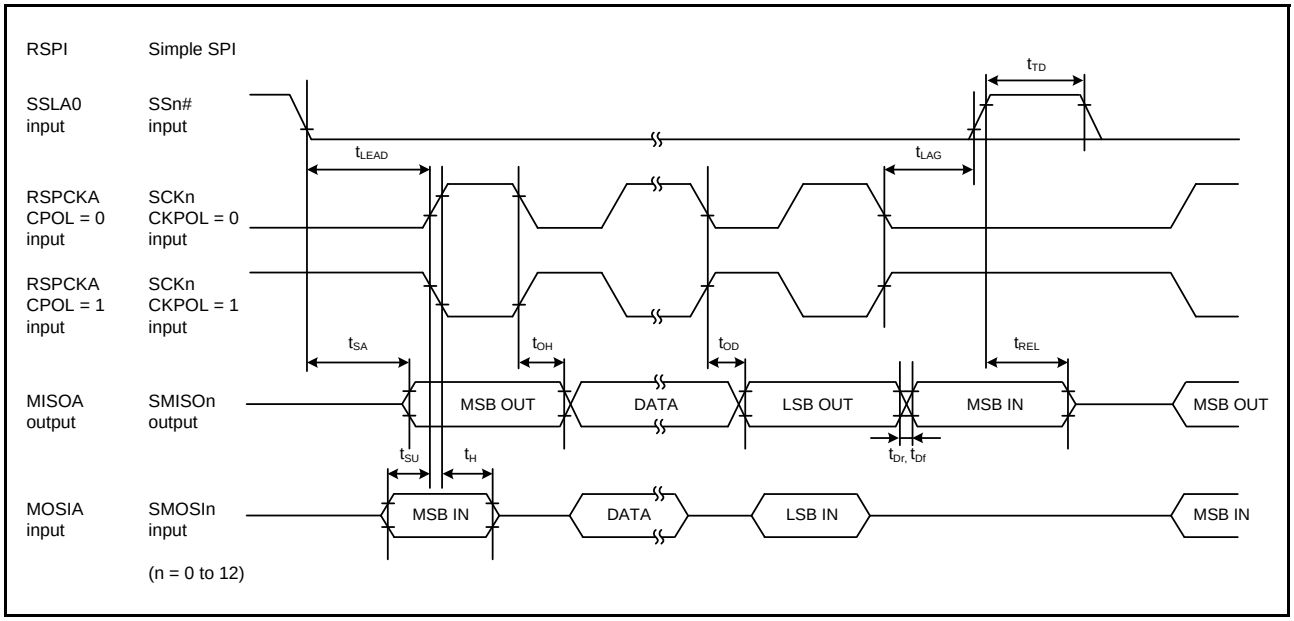

Figure 5.96 RSPI Timing (Slave, CPHA = 0) and Simple SPI Timing (Slave, CKPH = 1)

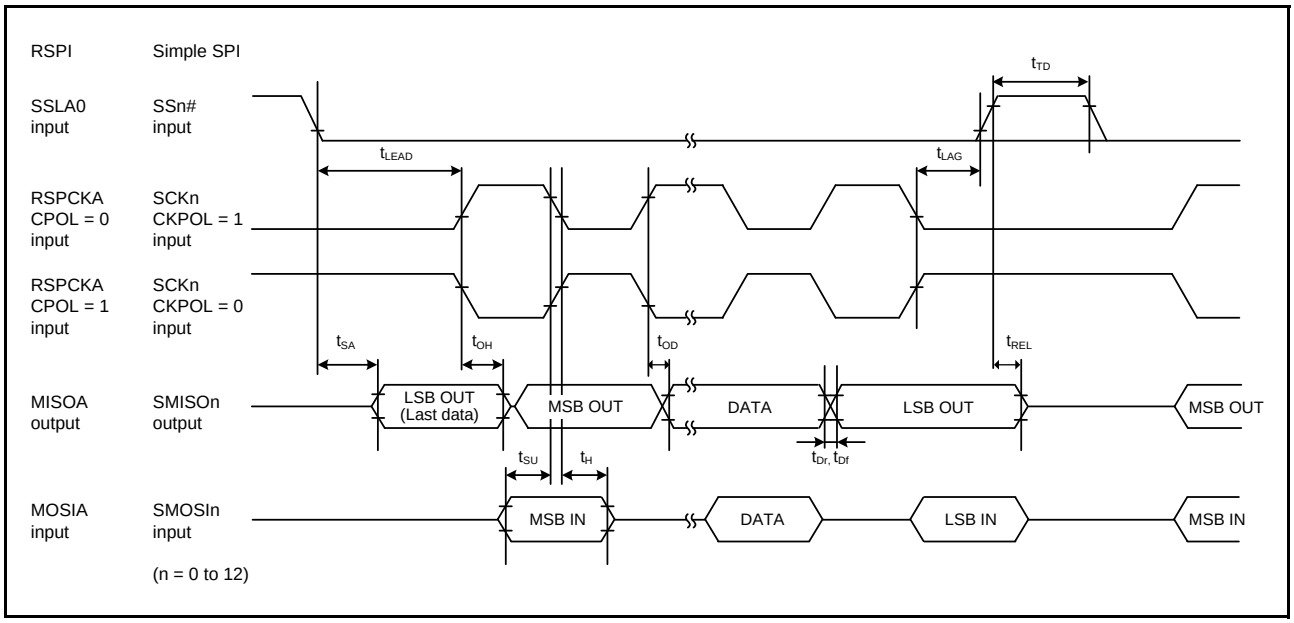

Figure 5.97 RSPI Timing (Slave, CPHA = 1) and Simple SPI Timing (Slave, CKPH = 0)

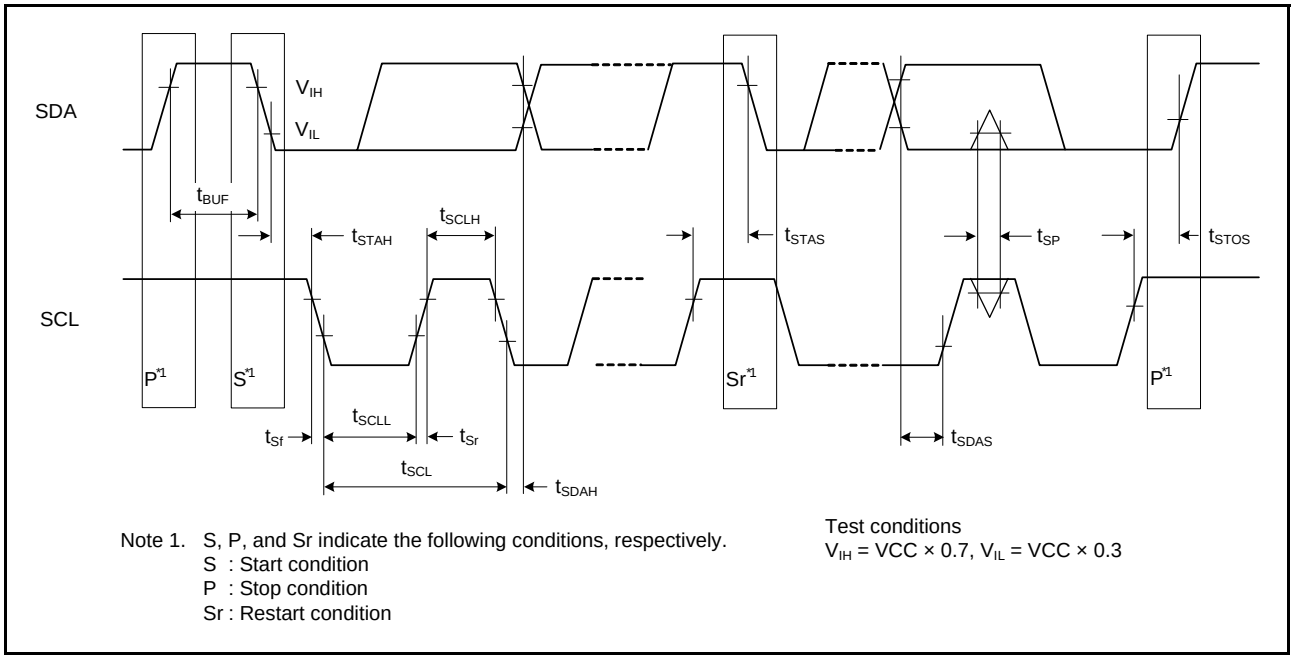

Figure 5.98 RIIC Bus Interface Input/Output Timing and Simple IIC Bus Interface Input/Output Timing

5.4 A/D Conversion Characteristics

Table 5.61 A/D Conversion Characteristics (1)

Conditions: VCC = AVCC0 = 2.7 to 5.5 V, VREFH0 ≥ 2.7 V, AVCC0-0.9 V ≤ VREFH0 ≤ AVCC0*3,
VSS = AVSS0 = VREFL = VREFL0 = 0 V, T_a = –40 to +105°C

Item		Min.	Typ.	Max.	Unit	Test Conditions
A/D conversion clock frequency (fPCLKD)		1	—	50	MHz	
Resolution		—	—	12	Bit	
Conversion time*1 (Operation at fPCLKD = 50 MHz)	Permissible signal source impedance (Max.) = 0.5 kΩ	1.0 (0.4)*2	—	—	μs	Sampling in 20 states
	Permissible signal source impedance (Max.) = 1 kΩ	1.1 (0.5)*2	—	—		Sampling in 25 states
	Permissible signal source impedance (Max.) = 5 kΩ	1.5 (0.9)*2	—	—		Sampling in 45 states
Analog input capacitance		—	—	30	pF	
Offset error		—	±0.5	±4.5	LSB	High-precision channel
				±7.5		Normal-precision channel
Full-scale error		—	±0.75	±4.5	LSB	High-precision channel
				±7.5		Normal-precision channel
Quantization error		—	±0.5	—	LSB	
Absolute accuracy		—	±1.25	±5.0	LSB	High-precision channel
		—	±1.25	±8.0	LSB	Normal-precision channel
DNL differential nonlinearity error		—	±1.0	—	LSB	
INL integral nonlinearity error		—	±1.0	±3.0	LSB	

Note: • PCLKD must be set to 40 MHz or lower when HOCO is to be selected as the A/D conversion clock. The characteristics apply when no pin functions other than A/D converter input are used. Absolute accuracy includes quantization errors. Offset error, full-scale error, DNL differential nonlinearity error, and INL integral nonlinearity error do not include quantization errors.

Note: • When using the channel-dedicated sample-and-hold circuit, use the AN000 to AN002 analog input voltage (V_{AN}) that satisfies all the following conditions: 0.25 V ≤ V_{AN} ≤ AVCC0 - 0.25 V, V_{AN} ≤ VREFH0, and AVCC0 ≥ 2.7 V.

Note 1. The conversion time is the sum of the sampling time and the comparison time. As the test conditions, the number of sampling states is indicated.

Note 2. The value in parentheses indicates the sampling time.

Note 3. When using the temperature sensor, use it when AVCC0 = VREFH0.

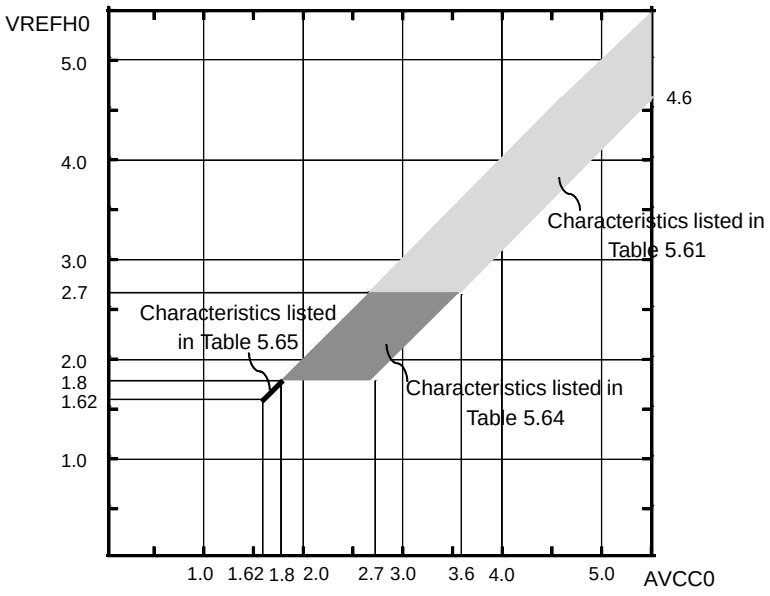

Figure 5.99 AVCC0 to VREFH0 Voltage Range

Table 5.62 Channel Classification for A/D Converter

Classification	Channel	Channel-Dedicated Sample-and-Hold Circuit	Conditions	
High-precision channel	AN000 to AN002	Used	AVCC0 = 2.7 to 5.5 V AVCC0 - 0.9 V ≤ VREFH0 ≤ AVCC0 VREFH0 ≥ 2.7 V AVSS0 = VREFL0 = 0 V 0.25 V ≤ V_{AN} ≤ AVCC0 - 0.25 V V_{AN} ≤ VREFH0	It is disallowed to use pins AN000 to AN007 as digital outputs when the A/D converter is used.
		Not used	AVCC0 = 1.62 to 5.5 V When AVCC0 ≥ 1.8 V, AVCC0 - 0.9 V ≤ VREFH0 ≤ AVCC0 VREFH0 ≥ 1.8 V When AVCC0 < 1.8 V, VREFH0 = AVCC0 AVSS0 = VREFL0 = 0 V 0 V ≤ V_{AN} ≤ VREFH0	
	AN003 to AN007	—		
Normal-precision channel	AN008 to AN015	—		

Table 5.63 A/D Internal Reference Voltage Characteristics

Conditions: VCC = AVCC0 = 1.62 to 5.5 V, VSS = AVSS0 = VREFL = VREFL0 = 0 V, Ta = –40 to +105°C

Item	Min.	Typ.	Max.	Unit	Test Conditions
A/D internal reference voltage	1.35	1.50	1.65	V	

Table 5.64 A/D Conversion Characteristics (2)

Conditions: VCC = AVCC0 = 1.8 to 3.6 V, 1.8 V ≤ VREFH0 ≤ 2.7 V, AVCC0-0.9 V ≤ VREFH0 ≤ AVCC0*3,
VSS = AVSS0 = VREFL = VREFL0 = 0 V, T_a = –40 to +105°C

Item		Min.	Typ.	Max.	Unit	Test Conditions
A/D conversion clock frequency (fPCLKD)		1	—	25	MHz	
Resolution		—	—	12	Bit	
Conversion time*1 (Operation at fPCLKD = 25 MHz)	Permissible signal source impedance (Max.) = 1 kΩ	2.0 (0.8)*2	—	—	μs	Sampling in 20 states
	Permissible signal source impedance (Max.) = 5 kΩ	2.2 (1.0)*2	—	—		Sampling in 25 states
Analog input capacitance		—	—	30	pF	
Offset error		—	±0.5	±7.5	LSB	
Full-scale error		—	±1.25	±7.5	LSB	
Quantization error		—	±0.5	—	LSB	
Absolute accuracy		—	±3.0	±8.0	LSB	
DNL differential nonlinearity error		—	±1.25	—	LSB	
INL integral nonlinearity error		—	±1.5	±3.0	LSB	

Note: • The characteristics apply when no pin functions other than A/D converter input are used. Absolute accuracy includes quantization errors. Offset error, full-scale error, DNL differential nonlinearity error, and INL integral nonlinearity error do not include quantization errors.

Note: • When using the channel-dedicated sample-and-hold circuit, use the AN000 to AN002 analog input voltage (V_{AN}) that satisfies all the following conditions: 0.25 V ≤ V_{AN} ≤ AVCC0 - 0.25 V, V_{AN} ≤ VREFH0, and AVCC0 ≥ 2.7 V.

Note 1. The conversion time is the sum of the sampling time and the comparison time. As the test conditions, the number of sampling states is indicated.

Note 2. The value in parentheses indicates the sampling time.

Note 3. When using the temperature sensor, use it when AVCC0 = VREFH0.

Table 5.65 A/D Conversion Characteristics (3)

Conditions: VCC = AVCC0 = 1.62 to 1.8 V, VREFH0 = AVCC0,
VSS = AVSS0 = VREFL = VREFL0 = 0 V, T_a = –40 to +105°C

Item		Min.	Typ.	Max.	Unit	Test Conditions
A/D conversion clock frequency (fPCLKD)		1	—	12.5	MHz	
Resolution		—	—	12	Bit	
Conversion time*1 (Operation at fPCLKD = 12.5 MHz)	Permissible signal source impedance (Max.) = 1 kΩ	3.36 (0.96)*2	—	—	μs	Sampling in 12 states
	Permissible signal source impedance (Max.) = 5 kΩ	3.6 (1.2)*2	—	—		Sampling in 15 states
Analog input capacitance		—	—	30	pF	
Offset error		—	±0.5	±7.5	LSB	
Full-scale error		—	±1.25	±7.5	LSB	
Quantization error		—	±0.5	—	LSB	
Absolute accuracy		—	±2.75	±8.0	LSB	
DNL differential nonlinearity error		—	±1.25	—	LSB	
INL integral nonlinearity error		—	±1.25	±3.0	LSB	

Note: • The characteristics apply when no pin functions other than A/D converter input are used. Absolute accuracy includes quantization errors. Offset error, full-scale error, DNL differential nonlinearity error, and INL integral nonlinearity error do not include quantization errors.

Note 1. The conversion time is the sum of the sampling time and the comparison time. As the test conditions, the number of sampling states is indicated.

Note 2. The value in parentheses indicates the sampling time.

Table 5.66 Sampling Time

Conditions: VCC = AVCC0 = 1.62 to 5.5 V, VSS = AVSS0 = VREFL = VREFL0 = 0 V, T_a = –40 to +105°C

Item		Symbol	Typ.	Unit	Test Conditions
Sampling time	High-precision channel	Ts	0.2 + 0.14 × R0 (KΩ)	μs	Figure 5.100
	Normal-precision channel		0.35 + 0.14 × R0 (KΩ)		

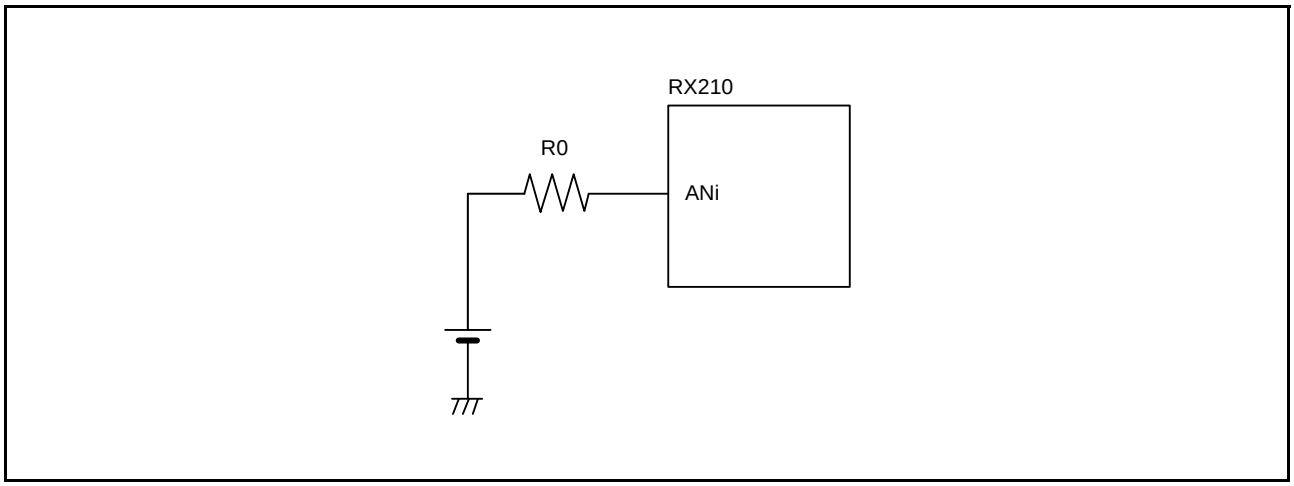

Figure 5.100 Internal Equivalent Circuit of Analog Input Pin

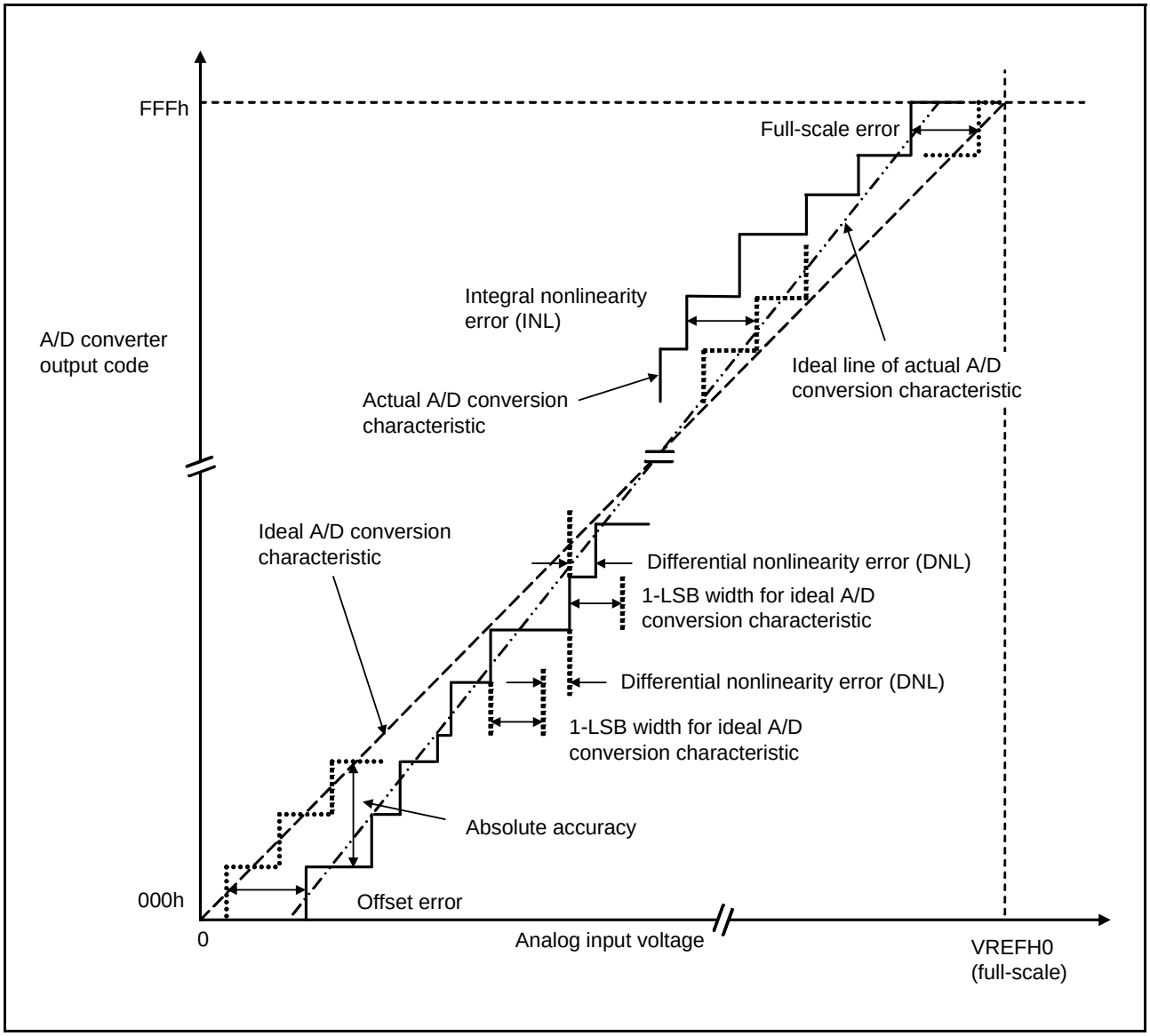

Figure 5.101 Illustration of A/D Converter Characteristic Terms

Absolute accuracy

Absolute accuracy is the difference between output code based on the theoretical A/D conversion characteristics, and the actual A/D conversion result. When measuring absolute accuracy, the voltage at the midpoint of the width of analog input voltage (1-LSB width), that can meet the expectation of outputting an equal code based on the theoretical A/D conversion characteristics, is used as an analog input voltage. For example, if 12-bit resolution is used and if reference voltage (VREFH0 = 5.12 V), then 1-LSB width becomes 1.25 mV, and 0 mV, 1.25 mV, 2.5 mV, ... are used as analog input voltages.

If analog input voltage is 10 mV, absolute accuracy = ±5 LSB means that the actual A/D conversion result is in the range of 003h to 00Dh though an output code, 008h, can be expected from the theoretical A/D conversion characteristics.

Integral nonlinearity error (INL)

Integral nonlinearity error is the maximum deviation between the ideal line when the measured offset and full-scale errors are zeroed, and the actual output code.

Differential nonlinearity error (DNL)

Differential nonlinearity error is the difference between 1-LSB width based on the ideal A/D conversion characteristics and the width of the actually output code.

Offset error

Offset error is the difference between a transition point of the ideal first output code and the actual first output code.

Full-scale error

Full-scale error is the difference between a transition point of the ideal last output code and the actual last output code.

5.5 D/A Conversion Characteristics

Table 5.67 D/A Conversion Characteristics (1)

Conditions: VCC = AVCC0 = 2.7 to 5.5 V, VREFH = 2.7 V to AVCC0,
VSS = AVSS0 = VREFL = VREFL0 = 0 V, fPCLKB = up to 32 MHz, T_a = –40 to +105°C

Item	Min.	Typ.	Max.	Unit	Test Conditions
Resolution	—	—	10	Bit	
Conversion time	—	—	3.0	μs	20-pF capacitive load
Absolute accuracy	—	±3.0	±5.0	LSB	4-MΩ resistive load
	—	—	±4.0	LSB	8-MΩ resistive load
RO output resistance	—	4.1	—	kΩ	

Table 5.68 D/A Conversion Characteristics (2)

Conditions: VCC = AVCC0 = 2.7 to 5.5 V, VREFH =1.8 V to AVCC0,
VSS = AVSS0 = VREFL = VREFL0 = 0 V, fPCLKB = up to 32 MHz, T_a = –40 to +105°C

Item	Min.	Typ.	Max.	Unit	Test Conditions
Resolution	—	—	10	Bit	
Conversion time	—	—	10.0	μs	20-pF capacitive load
Absolute accuracy	—	±5.0	±6.0	LSB	4-MΩ resistive load
	—	—	±5.0	LSB	8-MΩ resistive load
RO output resistance	—	4.1	—	kΩ	

5.6 Temperature Sensor Characteristics

Table 5.69 Temperature Sensor Characteristics

Conditions: VCC = AVCC0 = VREFH0 = 1.8 to 5.5 V, VSS = AVSS0 = VREFL = VREFL0 = 0 V, T_a = –40 to +105°C

Item		Symbol	Min.	Typ.	Max.	Unit	Test Conditions
Relative accuracy		—	—	±1.0	—	°C	
Temperature slope	1.8 ≤ AVCC0 < 2.7	—	—	7.27	—	mV/°C	PGAGAIN = 00b
	2.7 ≤ AVCC0 < 3.6		—	10.46	—		PGAGAIN = 01b
	3.6 ≤ AVCC0 < 4.5		—	13.98	—		PGAGAIN = 10b
	4.5 ≤ AVCC0 ≤ 5.5		—	21.65	—		PGAGAIN = 11b
Output voltage (@ 25°C)		—	—	1.375	—	V	VCC = 3.6 V
Temperature sensor start time		t_{START}	—	—	80	μs	Figure 5.102
Sampling time		—	30	72	300	μs	
PGA restart time		t_{RST_PGA}	—	—	40	μs	

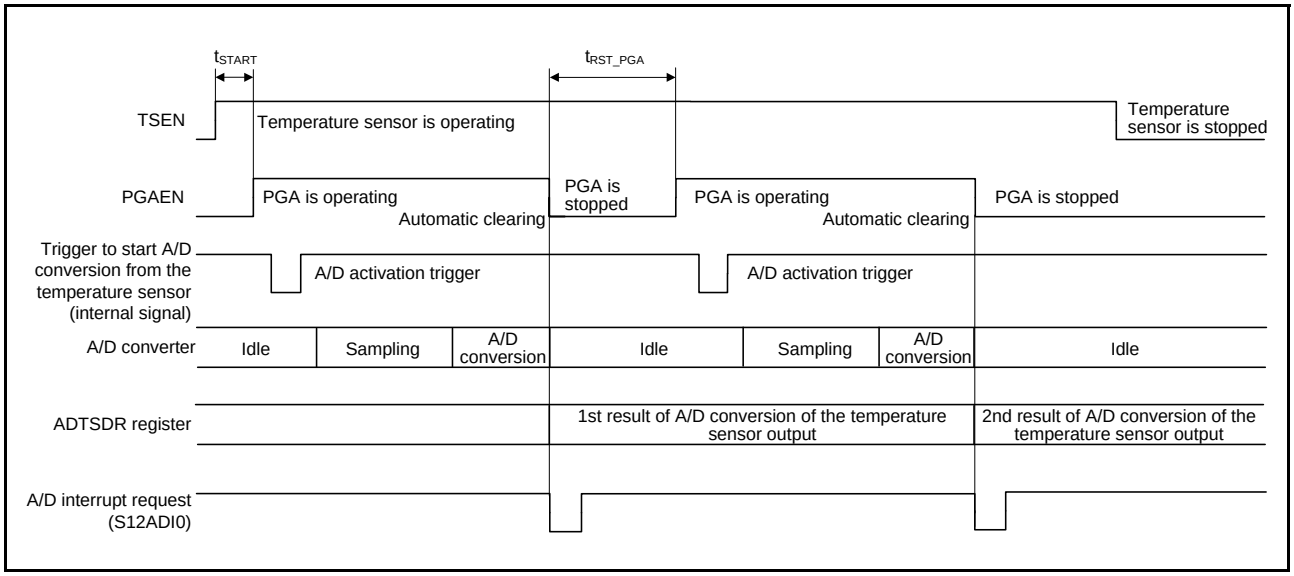

Figure 5.102 A/D Conversion Timing Example of the Temperature Sensor (Two Conversions Performed)

5.7 Comparator Characteristics

Table 5.70 Comparator Characteristics

Conditions: VCC = AVCC0 = 1.62 to 5.5 V, VSS = AVSS0 = VREFL = VREFL0 = 0 V, T_a = –40 to +105°C

Item		Symbol	Min.	Typ.	Max.	Unit	Test Conditions
Comparator A	External reference voltage input range	LVREF	1.4	—	VCC	V	
	External comparison voltage (CMPA1, CMPA2) input range	VI	–0.3	—	VCC + 0.3	V	
	Offset	—	—	±50	±150	mV	
	Comparator output delay time*1	—	—	3	—	μs	At falling edge VI = LVREF – 110 mV
			—	2	—	μs	At falling edge VI < LVREF – 1 V
			—	3	—	μs	At rising edge VI = LVREF + 160 mV
			—	1.5	—	μs	At rising edge VI > LVREF + 1 V
	Comparator operating current	ICMPA	—	0.5	—	μA	VCC = 5.0 V
Comparator B	Input reference voltage for CVREFB0, CVREFB1	VREF	0	—	VCC – 1.4	V	
	Input voltage for CMPB0, CMPB1	VI	–0.3	—	VCC + 0.3	V	
	Offset	—	—	±10	±100	mV	
	Comparator output delay time	t_d	—	—	1	μs	VI = VREF + 100 mV
	Comparator operating current	ICMPB	—	75	150	μA	VCC = 5.0 V For total two channels

Note 1. When the digital filter is disabled.

5.8 Power-on Reset Circuit and Voltage Detection Circuit Characteristics

Table 5.71 Power-on Reset Circuit and Voltage Detection Circuit Characteristics (1)

Conditions: VCC = AVCC0, VSS = AVSS0 = VREFL = VREFL0 = 0 V, T_a = –40 to +105°C

Item			Symbol	Min.	Typ.	Max.	Unit	Test Conditions
Voltage detection level	Power-on reset (POR)	Low power consumption function disabled*1	V_{POR}	1.30	1.40	1.55	V	Figure 5.103 and Figure 5.104
		Low power consumption function enabled*2		1.00	1.20	1.45		
	Voltage detection circuit (LVD0)*3		V_{det0_0}	3.65	3.80	3.95	V	Figure 5.105
			V_{det0_1}	2.70	2.80	2.90		
			V_{det0_2}	1.80	1.90	2.00		
			V_{det0_3}	1.62	1.72	1.82		
	Voltage detection circuit (LVD1)*4		V_{det1_0}	4.00	4.15	4.30	V	Figure 5.106
			V_{det1_1}	3.85	4.00	4.15		
			V_{det1_2}	3.70	3.85	4.00		At falling edge VCC
			V_{det1_3}	3.55	3.70	3.85		
			V_{det1_4}	3.40	3.55	3.70		
			V_{det1_5}	3.25	3.40	3.55		
			V_{det1_6}	3.10	3.25	3.40		
			V_{det1_7}	2.95	3.10	3.25		
			V_{det1_8}	2.85	2.95	3.05		
			V_{det1_9}	2.70	2.80	2.90		
			V_{det1_A}	2.55	2.65	2.75		
			V_{det1_B}	2.40	2.50	2.60		
			V_{det1_C}	2.25	2.35	2.45		
			V_{det1_D}	2.10	2.20	2.30		
			V_{det1_E}	1.95	2.05	2.15		
			V_{det1_F}	1.80	1.90	2.00		

Note: • These characteristics apply when noise is not superimposed on the power supply.

Note 1. When the CPU is in a mode other than software standby and deep software standby modes, when the CPU transits to software standby mode with the FHSSBYCR.SOFTCUT[2] bit set to 0, or when the CPU transits to deep software standby mode with the DPSBYCR.DEEPCUT1 bit set to 0.

Note 2. When the CPU transits to software standby mode with the FHSSBYCR.SOFTCUT[2] bit set to 1 or when the CPU transits to deep software standby mode with the DPSBYCR.DEEPCUT1 bit set to 1.

Note 3. # in the symbol Vdet0_# denotes the value of the LDSEL[1:0] bits.

Note 4. # in the symbol Vdet1_# denotes the value of the LVDLVLR.LVD1LVL[3:0] bits.

Table 5.72 Power-on Reset Circuit and Voltage Detection Circuit Characteristics (2)

Conditions: VCC = AVCC0, VSS = AVSS0 = VREFL = VREFL0 = 0 V, T_a = –40 to +105°C

Item		Symbol	Min.	Typ.	Max.	Unit	Test Conditions
Voltage detection level	Voltage detection circuit (LVD2)*1	V_{det2_0}	4.00	4.15	4.30	V	Figure 5.107 At falling edge VCC
		V_{det2_1}	3.85	4.00	4.15		
		V_{det2_2}	3.70	3.85	4.00		
		V_{det2_3}	3.55	3.70	3.85		
		V_{det2_4}	3.40	3.55	3.70		
		V_{det2_5}	3.25	3.40	3.55		
		V_{det2_6}	3.10	3.25	3.40		
		V_{det2_7}	2.95	3.10	3.25		
		V_{det2_8}	2.85	2.95	3.05		
		V_{det2_9}	2.70	2.80	2.90		
		V_{det2_A}	2.55	2.65	2.75		
		V_{det2_B}	2.40	2.50	2.60		
		V_{det2_C}	2.25	2.35	2.45		
		V_{det2_D}	2.10	2.20	2.30		
		V_{det2_E}	1.95	2.05	2.15		
		V_{det2_F}	1.80	1.90	2.00		
		V_{CMPA2}	1.18	1.33	1.48		EXVCCINP2 = 1
Internal reset time	Power-on reset time	t_{POR}	—	9	—	ms	Figure 5.104
	Voltage monitoring 0 reset time	t_{LVD0}	—	9	—		Figure 5.105
	Voltage monitoring 1 reset time	t_{LVD1}	—	1.4	—		Figure 5.106
	Voltage monitoring 2 reset time	t_{LVD2}	—	1.4	—		Figure 5.107
Minimum VCC down time*2		t_{VOFF}	200	—	—	μs	Figure 5.103
Response delay time		t_{det}	—	—	200	μs	Figure 5.104
LVD operation stabilization time (after LVD is enabled)		$Td_{(E-A)}$	—	—	15	μs	Figure 5.106 and Figure 5.107
Power-on reset enable time		$t_{W(POR)}$	1	—	—	ms	Figure 5.104 VCC = 0.9 V or lower
Hysteresis width (LVD1 and LVD2)		V_{LVH}	—	100	—	mV	When selection is from among VdetX_0 to 7.
			—	50	—		When selection is from among VdetX_8 to F.

Note: • These characteristics apply when noise is not superimposed on the power supply.

Note 1. # in the symbol Vdet2_# denotes the value of the LVDLVLR.LVD2LVL[3:0] bits.

Note 2. The minimum VCC down time indicates the time when VCC is below the minimum value of voltage detection levels V_{POR}, V_{det0}, V_{det1}, and V_{det2} for the POR/LVD.

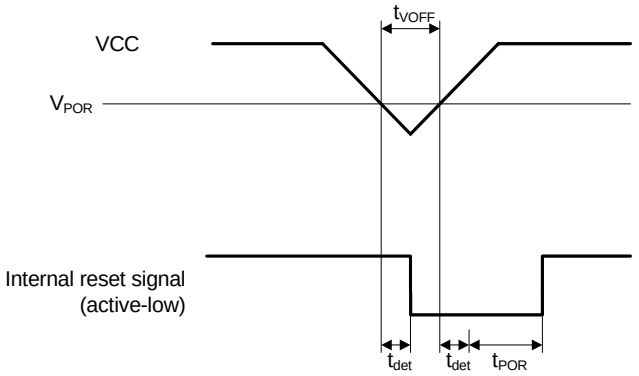

Figure 5.103 Voltage Detection Reset Timing

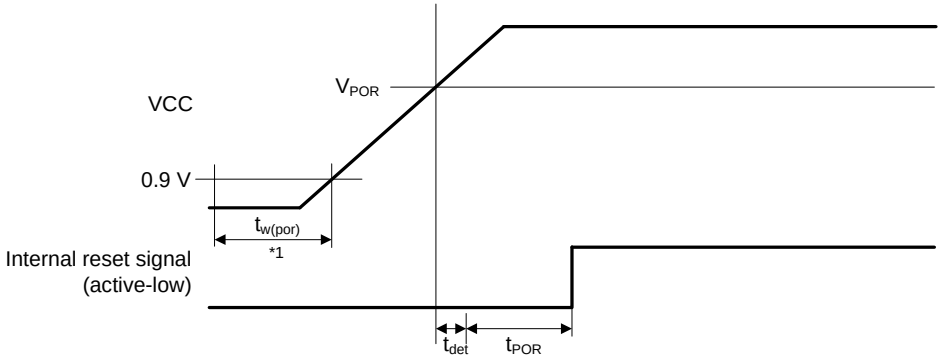

Note 1. $t_{w(por)}$ is the time required for a power-on reset to be enabled while the external power VCC is being held below the valid voltage (0.9 V).
When VCC turns on, maintain $t_{w(por)}$ for 1 ms or more.

Figure 5.104 Power-on Reset Timing

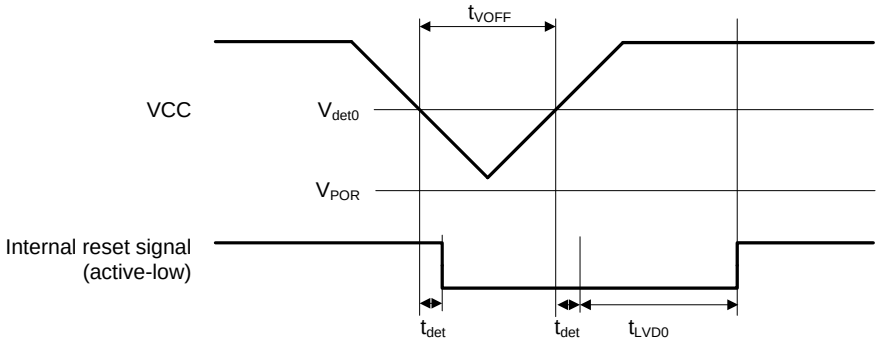

Figure 5.105 Voltage Detection Circuit Timing (V_{det0})

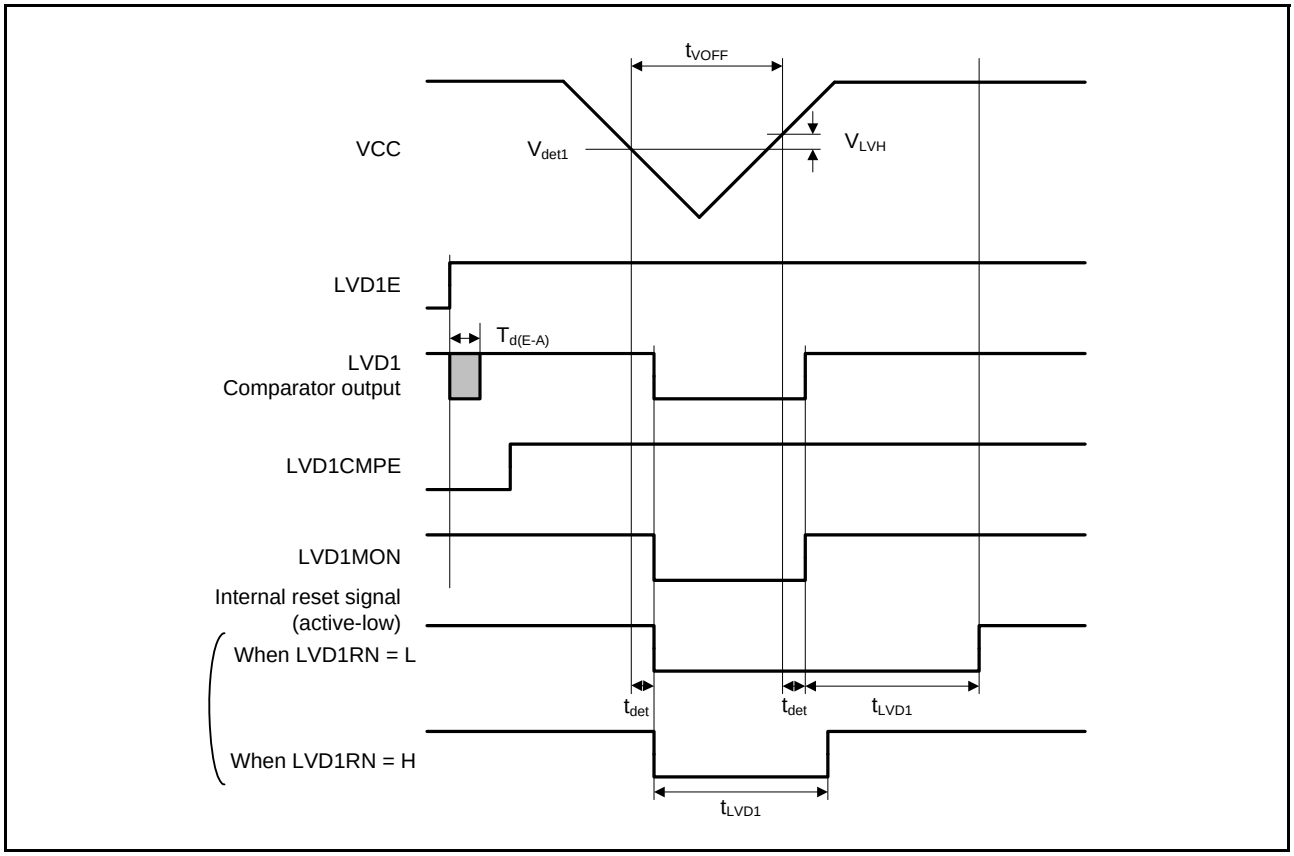

Figure 5.106 Voltage Detection Circuit Timing (V_{det1})

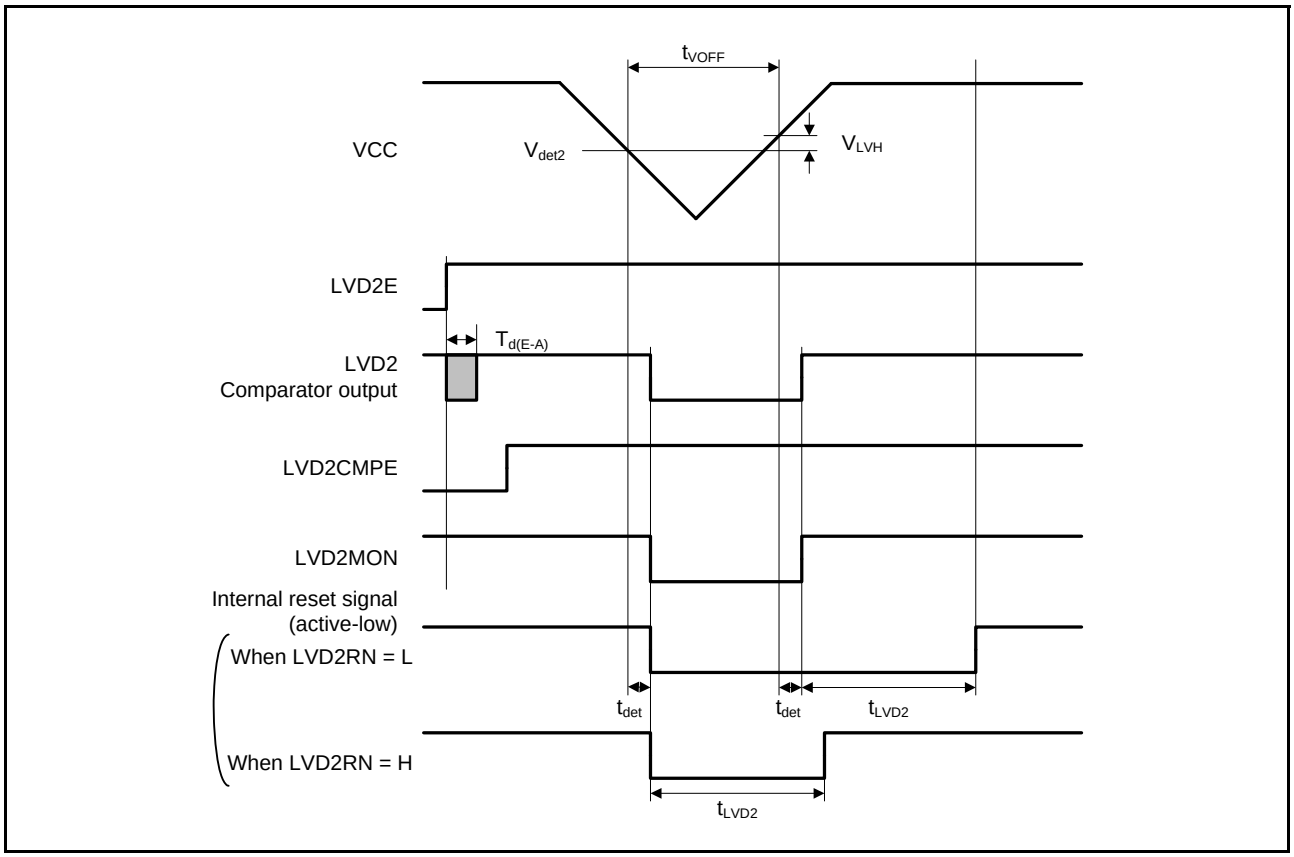

Figure 5.107 Voltage Detection Circuit Timing (V_{det2})

5.9 Oscillation Stop Detection Timing

Table 5.73 Oscillation Stop Detection Circuit Characteristics

Conditions: VCC = AVCC0 = 1.62 to 5.5 V, VSS = AVSS0 = VREFL = VREFL0 = 0 V, T_a = –40 to +105°C

Item	Symbol	Min.	Typ.	Max.	Unit	Test Conditions
Detection time	t_{dr}	—	—	1	ms	Figure 5.108

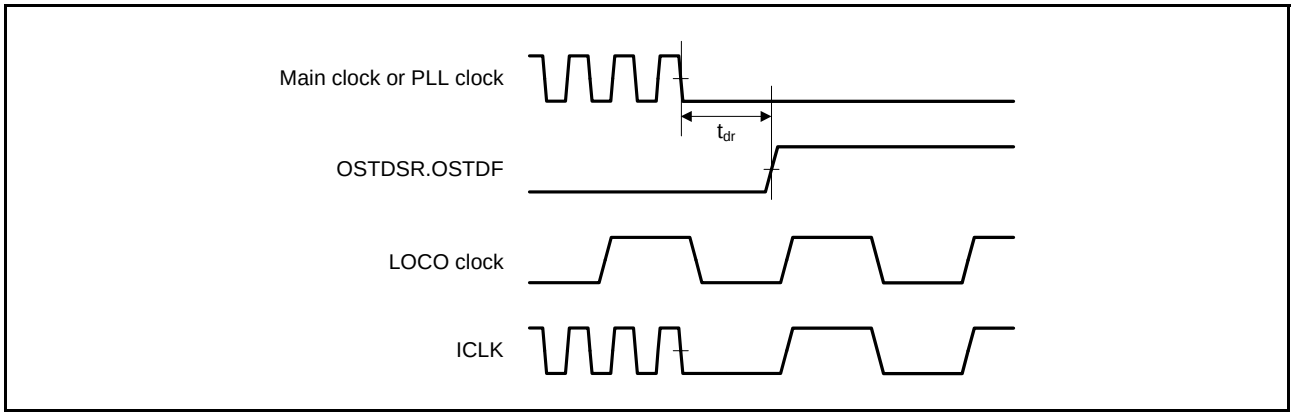

Figure 5.108 Oscillation Stop Detection Timing

5.10 ROM (Flash Memory for Code Storage) Characteristics

[Chip version A]

Table 5.74 ROM (Flash Memory for Code Storage) Characteristics (1)

Item	Symbol	Min.	Typ.	Max.	Unit	Conditions
Reprogramming/erasure cycle*1	N_{PEC}	1000	—	—	Times	
Data hold time	t_{DRP}	10*2	—	—	Year	

Note 1. Definition of reprogram/erase cycle: The reprogram/erase cycle is the number of erasing for each block. When the reprogram/erase cycle is n times (n = 1000), erasing can be performed n times for each block. For instance, when 128-byte programming is performed 16 times for different addresses in 2-Kbyte block and then the entire block is erased, the reprogram/erase cycle is counted as one. However, programming the same address for several times as one erasing is not enabled (overwriting is prohibited).

Note 2. This result is obtained from reliability testing.

[Chip versions B and C]

Table 5.75 ROM (Flash Memory for Code Storage) Characteristics (2)

Item		Symbol	Min.	Typ.	Max.	Unit	Conditions
Reprogramming/erasure cycle*1		N_{PEC}	10000	—	—	Times	
Data hold time	After 1000 times of N_{PEC}	t_{DRP}	30*2	—	—	Year	Ta = +85°C
	After 10000 times of N_{PEC}		1*2	—	—	Year	

Note 1. Definition of reprogram/erase cycle: The reprogram/erase cycle is the number of erasing for each block. When the reprogram/erase cycle is n times (n = 1000), erasing can be performed n times for each block. For instance, when 128-byte programming is performed 16 times for different addresses in 2-Kbyte block and then the entire block is erased, the reprogram/erase cycle is counted as one. However, programming the same address for several times as one erasing is not enabled (overwriting is prohibited).

Note 2. This result is obtained from reliability testing.

[Chip versions A and C]

Table 5.76 ROM (Flash Memory for Code Storage) Characteristics (3) : high-speed operating mode, middle-speed operating mode 1A

Conditions: VCC = AVCC0 = 2.7 to 5.5 V, VREFH = VREFH0 = AVCC0, VSS = AVSS0 = VREFL = VREFL0 = 0 V
Temperature range for the programming/erasure operation: T_a = –40 to +105°C

Item		Symbol	FCLK = 4 MHz			FCLK = 32 MHz			Unit
			Min.	Typ.	Max.	Min.	Typ.	Max.	
Programming time when N_{PEC} ≤ 100 times	2 bytes	t_{P2}	—	0.52	4.8	—	0.19	2.5	ms
	8 bytes	t_{P8}	—	0.52	4.9	—	0.19	2.5	
	128 bytes	t_{P128}	—	1.50	10.7	—	0.57	4.8	
Programming time when N_{PEC} > 100 times	2 bytes	t_{P2}	—	0.61	5.7	—	0.23	3.0	ms
	8 bytes	t_{P8}	—	0.61	6.2	—	0.23	3.2	
	128 bytes	t_{P128}	—	1.71	13.2	—	0.65	6.0	
Erasure time when N_{PEC} ≤ 100 times	2 Kbytes	t_{E2K}	—	17.0	92.9	—	11.0	29	ms
Erasure time when N_{PEC} > 100 times	2 Kbytes	t_{E2K}	—	20.8	195.8	—	13.5	60	ms
Suspend delay time during programming (in programming/erasure priority mode)		t_{SPD}	—	—	0.9	—	—	0.8	ms
First suspend delay time during programming (in suspend priority mode)		t_{SPSD1}	—	—	220	—	—	120	μs
Second suspend delay time during programming (in suspend priority mode)		t_{SPSD2}	—	—	0.9	—	—	0.8	ms
Suspend delay time during erasing (in programming/erasure priority mode)		t_{SED}	—	—	0.9	—	—	0.8	ms
First suspend delay time during erasing (in suspend priority mode)		t_{SESD1}	—	—	220	—	—	120	μs
Second suspend delay time during erasing (in suspend priority mode)		t_{SESD2}	—	—	0.9	—	—	0.8	ms
FCU reset time		t_{FCUR}	20 μs or longer and FCLK × 6 or greater	—	—	20 μs or longer and FCLK × 6 or greater	—	—	μs

[Chip versions A and C]

Table 5.77 ROM (Flash Memory for Code Storage) Characteristics (4) : middle-speed operating mode 1B

Conditions: VCC = AVCC0 = 1.62 to 3.6 V, VREFH = VREFH0 = AVCC0, VSS = AVSS0 = VREFL = VREFL0 = 0 V
Temperature range for the programming/erasure operation: T_a = –40 to +105°C

Item		Symbol	FCLK = 4 MHz			FCLK = 32 MHz*1			Unit
			Min.	Typ.	Max.	Min.	Typ.	Max.	
Programming time when N_{PEC} ≤ 100 times	2 bytes	t_{P2}	—	0.69	6.0	—	0.30	3.5	ms
	8 bytes	t_{P8}	—	0.69	6.0	—	0.30	3.5	
	128 bytes	t_{P128}	—	1.76	14.2	—	0.85	8.3	
Programming time when N_{PEC} > 100 times	2 bytes	t_{P2}	—	0.81	7.1	—	0.35	4.2	ms
	8 bytes	t_{P8}	—	0.81	7.6	—	0.35	4.5	
	128 bytes	t_{P128}	—	1.99	17.5	—	0.96	10	
Erasure time when N_{PEC} ≤ 100 times	2 Kbytes	t_{E2K}	—	24.5	113.7	—	19.0	46	ms
Erasure time when N_{PEC} > 100 times	2 Kbytes	t_{E2K}	—	29.8	225.8	—	23.2	90 (1000 times ≥ N_{PEC} > 100 times), 98 (10000 times ≥ N_{PEC} > 1000 times)	ms
Suspend delay time during programming (in programming/erasure priority mode)		t_{SPD}	—	—	1.7	—	—	1.6	ms
First suspend delay time during programming (in suspend priority mode)		t_{SPSD1}	—	—	220	—	—	120	μs
Second suspend delay time during programming (in suspend priority mode)		t_{SPSD2}	—	—	1.7	—	—	1.6	ms
Suspend delay time during erasing (in programming/erasure priority mode)		t_{SED}	—	—	1.7	—	—	1.6	ms
First suspend delay time during erasing (in suspend priority mode)		t_{SESD1}	—	—	220	—	—	120	μs
Second suspend delay time during erasing (in suspend priority mode)		t_{SESD2}	—	—	1.7	—	—	1.6	ms
FCU reset time		t_{FCUR}	20 μs or longer and FCLK × 6 or greater	—	—	20 μs or longer and FCLK × 6 or greater	—	—	μs

Note 1. The operating frequency is 20 MHz (max.) when the voltage is in the range from 1.62 V to less than 1.8 V.

[Chip version B]

Table 5.78 ROM (Flash Memory for Code Storage) Characteristics (5) : middle-speed operating modes 1A and 2A

Conditions: VCC = AVCC0 = 2.7 to 5.5 V, VREFH = VREFH0 = AVCC0, VSS = AVSS0 = VREFL = VREFL0 = 0 V
Temperature range for the programming/erasure operation: T_a = –40 to +105°C

Item		Symbol	FCLK = 4 MHz			FCLK = 32 MHz			Unit
			Min.	Typ.	Max.	Min.	Typ.	Max.	
Programming time when N_{PEC} ≤ 100 times	2 bytes	t_{P2}	—	0.19	4.3	—	0.12	2.0	ms
	8 bytes	t_{P8}	—	0.19	4.4	—	0.12	2.0	
	128 bytes	t_{P128}	—	0.67	10.7	—	0.41	4.8	
Programming time when N_{PEC} > 100 times	2 bytes	t_{P2}	—	0.23	5.3	—	0.15	2.5	ms
	8 bytes	t_{P8}	—	0.23	5.4	—	0.15	2.5	
	128 bytes	t_{P128}	—	0.80	13.2	—	0.48	6.0	
Erasure time when N_{PEC} ≤ 100 times	2 Kbytes	t_{E2K}	—	13.0	92.9	—	10.5	29	ms
Erasure time when N_{PEC} > 100 times	2 Kbytes	t_{E2K}	—	15.9	176.9	—	12.8	60	ms
Suspend delay time during programming (in programming/erasure priority mode)		t_{SPD}	—	—	0.9	—	—	0.8	ms
First suspend delay time during programming (in suspend priority mode)		t_{SPSD1}	—	—	220	—	—	120	μs
Second suspend delay time during programming (in suspend priority mode)		t_{SPSD2}	—	—	0.9	—	—	0.8	ms
Suspend delay time during erasing (in programming/erasure priority mode)		t_{SED}	—	—	0.9	—	—	0.8	ms
First suspend delay time during erasing (in suspend priority mode)		t_{SESD1}	—	—	220	—	—	120	μs
Second suspend delay time during erasing (in suspend priority mode)		t_{SESD2}	—	—	0.9	—	—	0.8	ms
FCU reset time		t_{FCUR}	20 μs or longer and FCLK × 6 or greater	—	—	20 μs or longer and FCLK × 6 or greater	—	—	μs

[Chip version B]

Table 5.79 ROM (Flash Memory for Code Storage) Characteristics (6) : middle-speed operating modes 1B and 2B

Conditions: VCC = AVCC0 = 1.62 to 3.6 V, VREFH = VREFH0 = AVCC0, VSS = AVSS0 = VREFL = VREFL0 = 0 V
Temperature range for the programming/erasure operation: T_a = –40 to +105°C

Item		Symbol	FCLK = 4 MHz			FCLK = 32 MHz*1			Unit
			Min.	Typ.	Max.	Min.	Typ.	Max.	
Programming time when N_{PEC} ≤ 100 times	2 bytes	t_{P2}	—	0.25	5.0	—	0.21	2.8	ms
	8 bytes	t_{P8}	—	0.25	5.3	—	0.21	3.0	
	128 bytes	t_{P128}	—	0.92	14.0	—	0.65	8.3	
Programming time when N_{PEC} > 100 times	2 bytes	t_{P2}	—	0.31	6.2	—	0.26	3.5	ms
	8 bytes	t_{P8}	—	0.31	6.6	—	0.26	3.7	
	128 bytes	t_{P128}	—	1.09	17.5	—	0.77	10.0	
Erasure time when N_{PEC} ≤ 100 times	2 Kbytes	t_{E2K}	—	21.0	113.7	—	18.5	46	ms
Erasure time when N_{PEC} > 100 times	2 Kbytes	t_{E2K}	—	25.6	220.6	—	22.5	90 (1000 times ≥ N_{PEC} > 100 times), 98 (10000 times ≥ N_{PEC} > 1000 times)	ms
Suspend delay time during programming (in programming/erasure priority mode)		t_{SPD}	—	—	1.7	—	—	1.6	ms
First suspend delay time during programming (in suspend priority mode)		t_{SPSD1}	—	—	220	—	—	120	μs
Second suspend delay time during programming (in suspend priority mode)		t_{SPSD2}	—	—	1.7	—	—	1.6	ms
Suspend delay time during erasing (in programming/erasure priority mode)		t_{SED}	—	—	1.7	—	—	1.6	ms
First suspend delay time during erasing (in suspend priority mode)		t_{SESD1}	—	—	220	—	—	120	μs
Second suspend delay time during erasing (in suspend priority mode)		t_{SESD2}	—	—	1.7	—	—	1.6	ms
FCU reset time		t_{FCUR}	20 μs or longer and FCLK × 6 or greater	—	—	20 μs or longer and FCLK × 6 or greater	—	—	μs

Note 1. The operating frequency is 20 MHz (max.) when the voltage is in the range from 1.62 V to less than 1.8 V.

5.11 E2 DataFlash Characteristics

[Chip version A]

Table 5.80 E2 DataFlash Characteristics (1)

Item	Symbol	Min.	Typ.	Max.	Unit	Conditions
Reprogramming/erasure cycle*1	N_{DPEC}	100000	—	—	Times	
Data hold time	t_{DRP}	10*2	—	—	Year	

Note 1. The reprogram/erase cycle is the number of erasing for each block. When the reprogram/erase cycle is n times (n = 100000), erasing can be performed n times for each block. For instance, when 8-byte programming is performed 16 times for different addresses in 128-byte block and then the entire block is erased, the reprogram/erase cycle is counted as one. However, programming the same address for several times as one erasing is not enabled (overwriting is prohibited).

Note 2. This result is obtained from reliability testing.

[Chip versions B and C]

Table 5.81 E2 DataFlash Characteristics (2)

Item		Symbol	Min.	Typ.	Max.	Unit	Conditions
Reprogramming/erasure cycle*1		N_{DPEC}	100000	—	—	Times	
Data hold time	After 100000 times of N_{DPEC}	t_{DRP}	30*2	—	—	Year	Ta = +85°C

Note 1. The reprogram/erase cycle is the number of erasing for each block. When the reprogram/erase cycle is n times (n = 100000), erasing can be performed n times for each block. For instance, when 8-byte programming is performed 16 times for different addresses in 128-byte block and then the entire block is erased, the reprogram/erase cycle is counted as one. However, programming the same address for several times as one erasing is not enabled (overwriting is prohibited).

Note 2. This result is obtained from reliability testing.

[Chip versions A and C]

Table 5.82 E2 DataFlash Characteristics (3)
: high-speed operating mode, middle-speed operating mode 1A

Conditions: VCC = AVCC0 = 2.7 to 5.5 V, VREFH = VREFH0 = AVCC0, VSS = AVSS0 = VREFL = VREFL0 = 0 V
Temperature range for the programming/erasure operation: T_a = –40 to +105°C

Item		Symbol	FCLK = 4 MHz			FCLK = 32 MHz			Unit
			Min.	Typ.	Max.	Min.	Typ.	Max.	
Programming time when N_{DPEC} ≤ 100 times	2 bytes	t_{DP2}	—	0.40	4.4	—	0.16	2.0	ms
	8 bytes	t_{DP8}	—	0.45	5.1	—	0.17	2.2	
Programming time when N_{DPEC} > 100 times	2 bytes	t_{DP2}	—	0.62	6.4	—	0.25	3.0	ms
	8 bytes	t_{DP8}	—	0.69	7.5	—	0.26	3.2	
Erasure time when N_{DPEC} ≤ 100 times	128 bytes	t_{DE128}	—	5.6	27.1	—	2.8	8	ms
Erasure time when N_{DPEC} > 100 times	128 bytes	t_{DE128}	—	6.8	45.1	—	3.4	12	ms
Blank check time	2 bytes	t_{DBC2}	—	—	98	—	—	35	μs
	2 Kbytes	t_{DBC2K}	—	—	16	—	—	2.5	ms
Suspend delay time during programming (in programming/erasure priority mode)		t_{DSPD}	—	—	0.9	—	—	0.8	ms
First suspend delay time during programming (in suspend priority mode)		t_{DSPSD1}	—	—	220	—	—	120	μs
Second suspend delay time during programming (in suspend priority mode)		t_{DSPSD2}	—	—	0.9	—	—	0.8	ms
Suspend delay time during erasing (in programming/erasure priority mode)		t_{DSED}	—	—	0.9	—	—	0.8	ms
First suspend delay time during erasing (in suspend priority mode)		t_{DSESD1}	—	—	220	—	—	120	μs
Second suspend delay time during erasing (in suspend priority mode)		t_{DSESD2}	—	—	0.9	—	—	0.8	ms

[Chip versions A and C]

Table 5.83 E2 DataFlash Characteristics (4)
: middle-speed operating mode 1B

Conditions: VCC = AVCC0 = 1.62 to 3.6 V, VREFH = VREFH0 = AVCC0, VSS = AVSS0 = VREFL = VREFL0 = 0 V
Temperature range for the programming/erasure operation: T_a = –40 to +105°C

Item		Symbol	FCLK = 4 MHz			FCLK = 32 MHz*1			Unit
			Min.	Typ.	Max.	Min.	Typ.	Max.	
Programming time when N_{DPEC} ≤ 100 times	2 bytes	t_{DP2}	—	0.52	5.1	—	0.24	2.8	ms
	8 bytes	t_{DP8}	—	0.57	6.0	—	0.26	3.2	
Programming time when N_{DPEC} > 100 times	2 bytes	t_{DP2}	—	0.77	7.6	—	0.36	4.2	ms
	8 bytes	t_{DP8}	—	0.84	8.8	—	0.38	4.5	
Erasure time when N_{DPEC} ≤ 100 times	128 bytes	t_{DE128}	—	6.8	32.5	—	4.4	12	ms
Erasure time when N_{DPEC} > 100 times	128 bytes	t_{DE128}	—	8.2	51.4	—	5.3	17	ms
Blank check time	2 bytes	t_{DBC2}	—	—	110	—	—	40	μs
	2 Kbytes	t_{DBC2K}	—	—	16.3	—	—	2.6	ms
Suspend delay time during programming (in programming/erasure priority mode)		t_{DSPD}	—	—	1.7	—	—	1.6	ms
First suspend delay time during programming (in suspend priority mode)		t_{DSPSD1}	—	—	220	—	—	120	μs
Second suspend delay time during programming (in suspend priority mode)		t_{DSPSD2}	—	—	1.7	—	—	1.6	ms
Suspend delay time during erasing (in programming/erasure priority mode)		t_{DSED}	—	—	1.7	—	—	1.6	ms
First suspend delay time during erasing (in suspend priority mode)		t_{DSESD1}	—	—	220	—	—	120	μs
Second suspend delay time during erasing (in suspend priority mode)		t_{DSESD2}	—	—	1.7	—	—	1.6	ms

Note 1. The operating frequency is 20 MHz (max.) when the voltage is in the range from 1.62 V to less than 1.8 V.

[Chip version B]

Table 5.84 E2 DataFlash Characteristics (5)
: high-speed operating mode, middle-speed operating modes 1A and 2A

Conditions: VCC = AVCC0 = 2.7 to 5.5 V, VREFH = VREFH0 = AVCC0, VSS = AVSS0 = VREFL = VREFL0 = 0 V
Temperature range for the programming/erasure operation: T_a = –40 to +105°C

Item		Symbol	FCLK = 4 MHz			FCLK = 32 MHz			Unit
			Min.	Typ.	Max.	Min.	Typ.	Max.	
Programming time when N_{DPEC} ≤ 100 times	2 bytes	t_{DP2}	—	0.19	4.4	—	0.13	2.0	ms
	8 bytes	t_{DP8}	—	0.24	5.1	—	0.13	2.2	
Programming time when N_{DPEC} > 100 times	2 bytes	t_{DP2}	—	0.25	6.4	—	0.17	3.0	ms
	8 bytes	t_{DP8}	—	0.32	7.5	—	0.18	3.2	
Erasure time when N_{DPEC} ≤ 100 times	128 bytes	t_{DE128}	—	3.3	27.1	—	2.5	8	ms
Erasure time when N_{DPEC} > 100 times	128 bytes	t_{DE128}	—	4.0	45.1	—	3.0	12	ms
Blank check time	2 bytes	t_{DBC2}	—	—	98	—	—	35	μs
	2 Kbytes	t_{DBC2K}	—	—	16	—	—	2.5	ms
Suspend delay time during programming (in programming/erasure priority mode)		t_{DSPD}	—	—	0.9	—	—	0.8	ms
First suspend delay time during programming (in suspend priority mode)		t_{DSPSD1}	—	—	220	—	—	120	μs
Second suspend delay time during programming (in suspend priority mode)		t_{DSPSD2}	—	—	0.9	—	—	0.8	ms
Suspend delay time during erasing (in programming/erasure priority mode)		t_{DSED}	—	—	0.9	—	—	0.8	ms
First suspend delay time during erasing (in suspend priority mode)		t_{DSESD1}	—	—	220	—	—	120	μs
Second suspend delay time during erasing (in suspend priority mode)		t_{DSESD2}	—	—	0.9	—	—	0.8	ms

[Chip version B]

Table 5.85 E2 DataFlash Characteristics (6)
: middle-speed operating modes 1B and 2B

Conditions: VCC = AVCC0 = 1.62 to 3.6 V, VREFH = VREFH0 = AVCC0, VSS = AVSS0 = VREFL = VREFL0 = 0 V
Temperature range for the programming/erasure operation: T_a = –40 to +105°C

Item		Symbol	FCLK = 4 MHz			FCLK = 32 MHz*1			Unit
			Min.	Typ.	Max.	Min.	Typ.	Max.	
Programming time when N_{DPEC} ≤ 100 times	2 bytes	t_{DP2}	—	0.28	5.1	—	0.20	2.8	ms
	8 bytes	t_{DP8}	—	0.32	6.0	—	0.22	3.2	
Programming time when N_{DPEC} > 100 times	2 bytes	t_{DP2}	—	0.36	7.6	—	0.25	4.2	ms
	8 bytes	t_{DP8}	—	0.40	8.8	—	0.28	4.5	
Erasure time when N_{DPEC} ≤ 100 times	128 bytes	t_{DE128}	—	4.8	32.4	—	4.1	12	ms
Erasure time when N_{DPEC} > 100 times	128 bytes	t_{DE128}	—	5.8	51.4	—	4.9	17	ms
Blank check time	2 bytes	t_{DBC2}	—	—	110	—	—	40	μs
	2 Kbytes	t_{DBC2K}	—	—	16.3	—	—	2.6	ms
Suspend delay time during programming (in programming/erasure priority mode)		t_{DSPD}	—	—	1.7	—	—	1.6	ms
First suspend delay time during programming (in suspend priority mode)		t_{DSPSD1}	—	—	220	—	—	120	μs
Second suspend delay time during programming (in suspend priority mode)		t_{DSPSD2}	—	—	1.7	—	—	1.6	ms
Suspend delay time during erasing (in programming/erasure priority mode)		t_{DSED}	—	—	1.7	—	—	1.6	ms
First suspend delay time during erasing (in suspend priority mode)		t_{DSESD1}	—	—	220	—	—	120	μs
Second suspend delay time during erasing (in suspend priority mode)		t_{DSESD2}	—	—	1.7	—	—	1.6	ms

Note 1. The operating frequency is 20 MHz (max.) when the voltage is in the range from 1.62 V to less than 1.8 V.

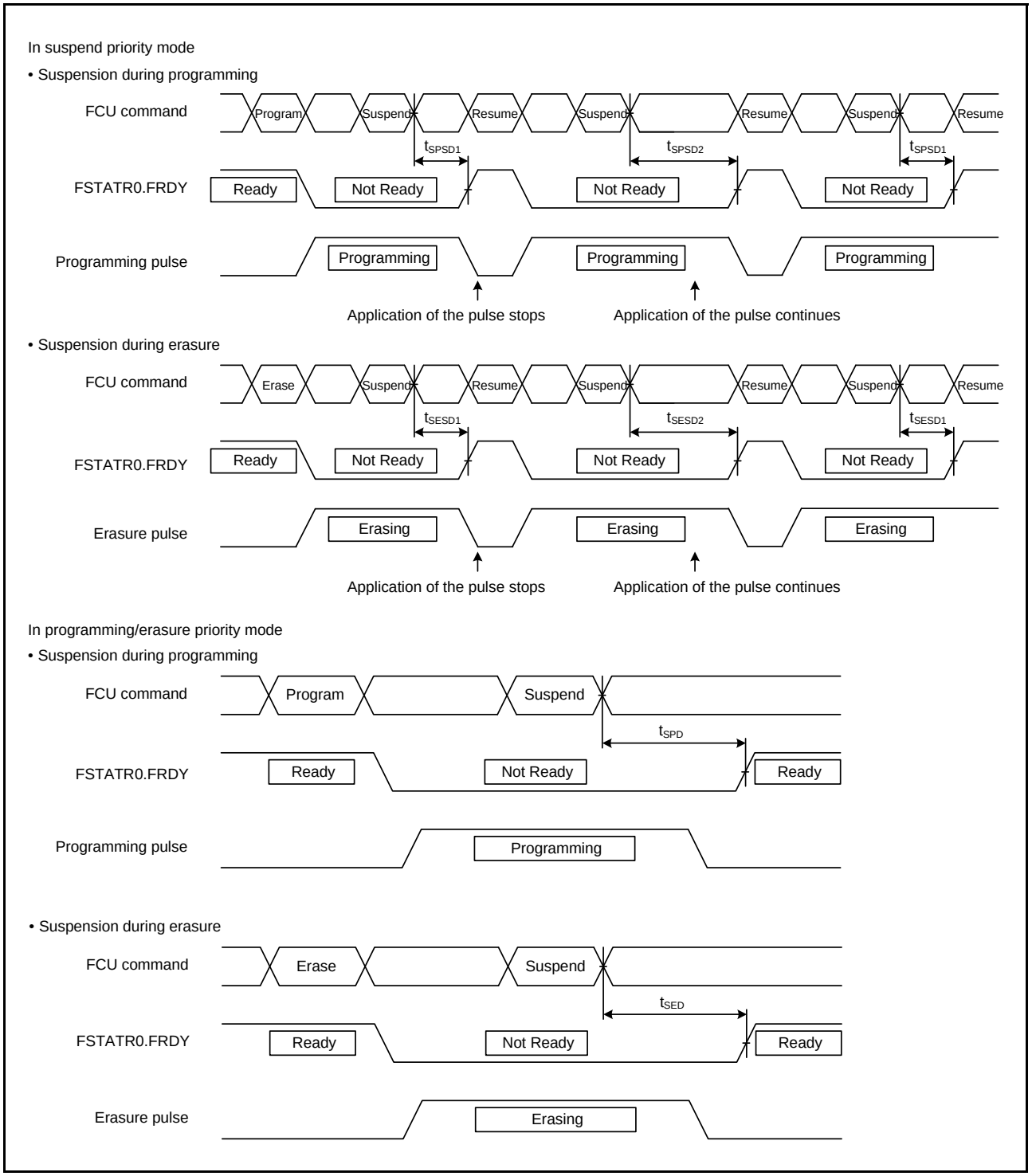

Figure 5.109 Flash Memory Program/Erase Suspend Timing

Appendix 1. Package Dimensions

Information on the latest version of the package dimensions or mountings has been displayed in “Packages” on Renesas Electronics Corporation website.

JEITA Package Code	RENESAS Code	Previous Code	MASS[Typ.]
P-TFLGA145-7x7-0.50	PTLG0145KA-A	145F0G	0.1g

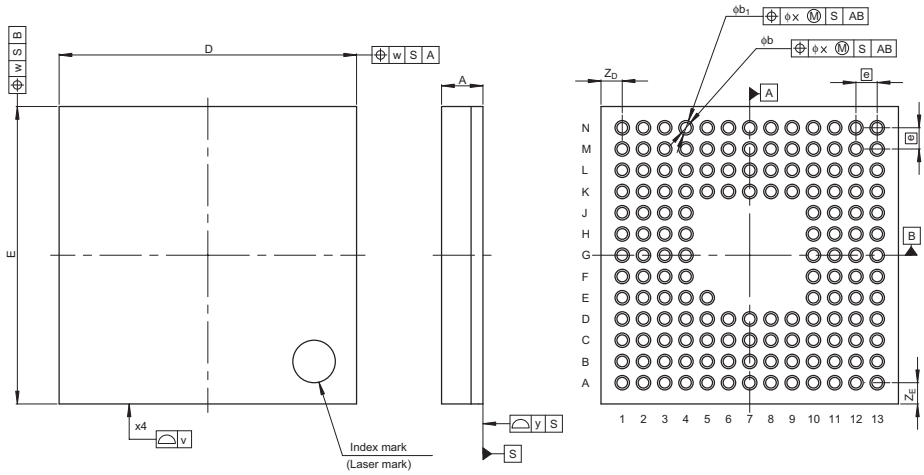

Reference Symbol	Dimension in Millimeters		
	Min	Nom	Max
D	—	7.0	—
E	—	7.0	—
v	—	—	0.15
w	—	—	0.20
A	—	—	1.05
e	—	0.5	—
b	0.21	0.25	0.29
b_1	0.29	0.34	0.39
x	—	—	0.08
y	—	—	0.08
Z_D	—	0.5	—
Z_E	—	0.5	—

Figure A 145-Pin TFLGA (PTLG0145KA-A)

JEITA Package Code	RENESAS Code	Previous Code	MASS[Typ.]
P-LFQFP144-20x20-0.50	PLQP0144KA-A	144P6Q-A / FP-144L / FP-144LV	1.2g

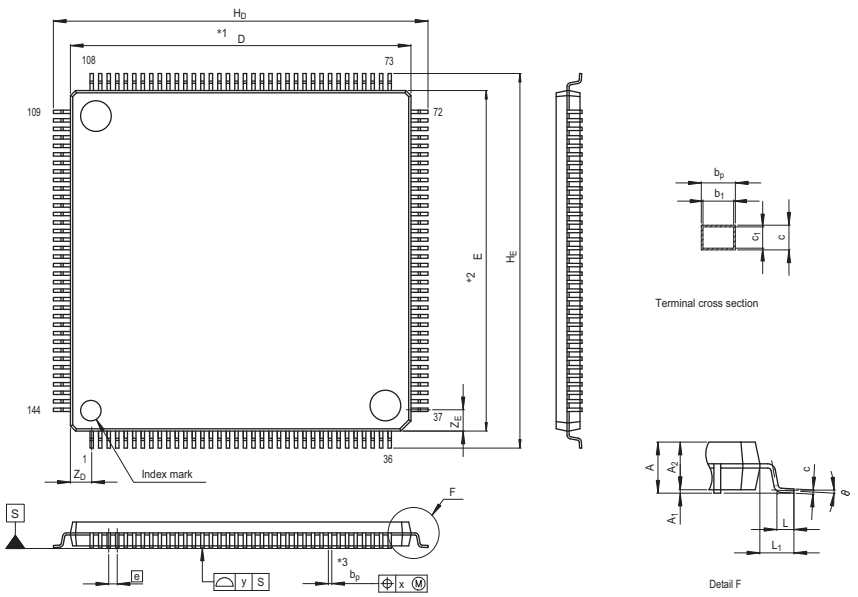

NOTE)
1. DIMENSIONS "*1" AND "*2" DO NOT INCLUDE MOLD FLASH.
2. DIMENSION "*3" DOES NOT INCLUDE TRIM OFFSET.

Reference Symbol	Dimension in Millimeters		
	Min	Nom	Max
D	19.9	20.0	20.1
E	19.9	20.0	20.1
A_2	—	1.4	—
H_D	21.8	22.0	22.2
H_E	21.8	22.0	22.2
A	—	—	1.7
A_1	0.05	0.1	0.15
b_p	0.17	0.22	0.27
b_1	—	0.20	—
c	0.09	0.145	0.20
c_1	—	0.125	—
θ	0°	—	8°
e	—	0.5	—
x	—	—	0.08
y	—	—	0.10
Z_D	—	1.25	—
Z_E	—	1.25	—
L	0.35	0.5	0.65
L_1	—	1.0	—

Figure B 144-Pin LQFP (PLQP0144KA-A)

JEITA Package Code	RENESAS Code	Previous Code	MASS[Typ.]
P-TFLGA100-7x7-0.65	PTLG0100JA-A	100F0G	0.1g

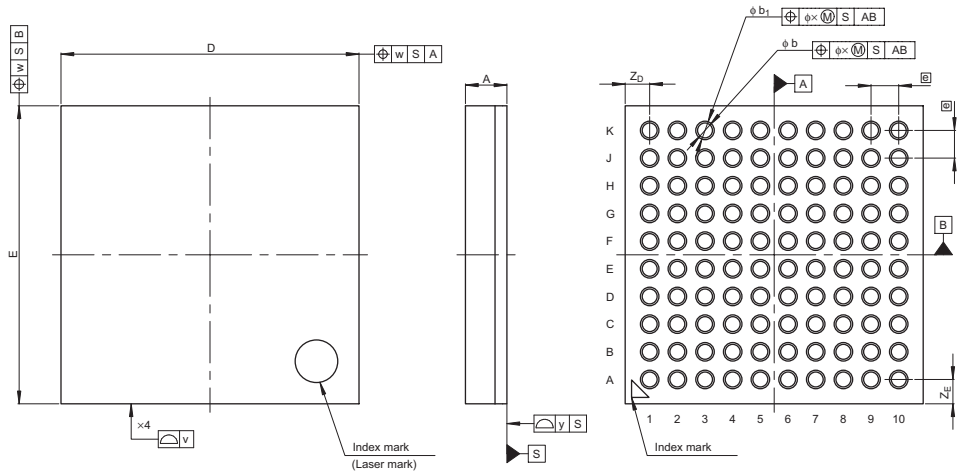

Reference Symbol	Dimension in Millimeters		
	Min	Nom	Max
D	—	7.0	—
E	—	7.0	—
v	—	—	0.15
w	—	—	0.20
A	—	—	1.05
e	—	0.65	—
b	0.31	0.35	0.39
b_1	0.385	0.435	0.485
x	—	—	0.08
y	—	—	0.10
Z_D	—	0.575	—
Z_E	—	0.575	—

Figure C 100-Pin TFLGA (PTLG0100JA-A)

JEITA Package Code	RENESAS Code	Previous Code	MASS[Typ.]
P-TFLGA100-5.5x5.5-0.50	PTLG0100KA-A	100F0M	0.1g

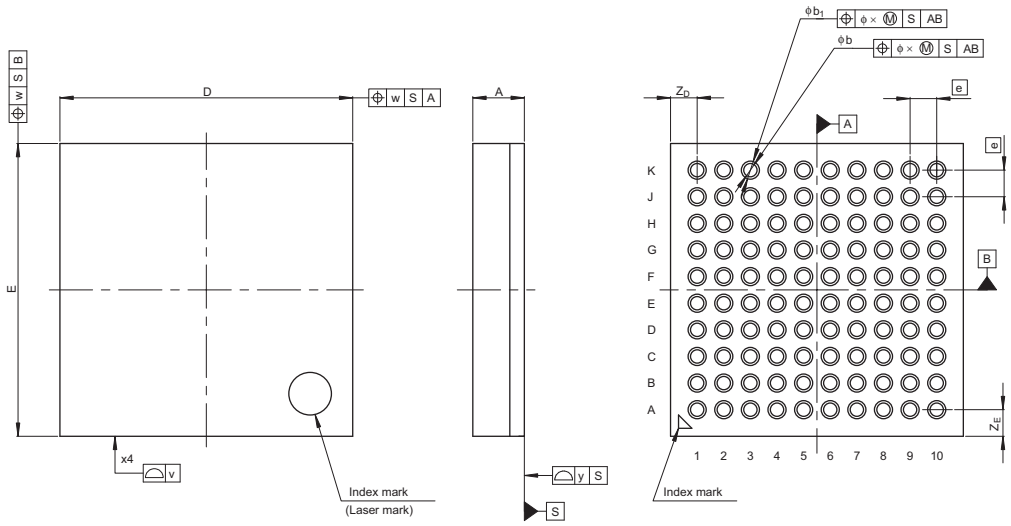

Reference Symbol	Dimension in Millimeters		
	Min	Nom	Max
D	—	5.5	—
E	—	5.5	—
v	—	—	0.15
w	—	—	0.20
A	—	—	1.05
e	—	0.5	—
b	0.21	0.25	0.29
b_1	0.29	0.34	0.39
x	—	—	0.08
y	—	—	0.08
Z_D	—	0.5	—
Z_E	—	0.5	—

Figure D 100-Pin TFLGA (PTLG0100KA-A)

JEITA Package code	RENESAS Code	Previous Code	MASS(TYP.)[g]
S-WFBGA69-3.91x4.26-0.40	SWBG0069LA-A	—	0.02

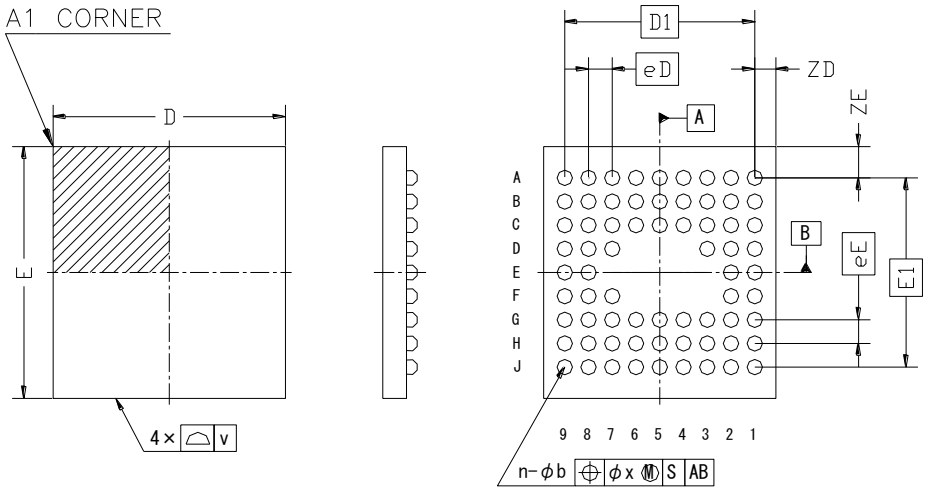

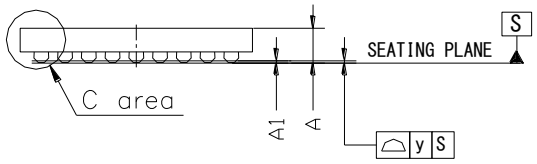

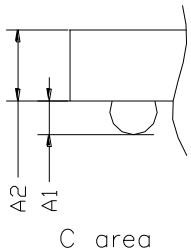

注記:
1. 端子ﾋﾟｯﾁは端子中央部の位置で規定する。
2. ﾃﾞｰﾀﾑA及びBは、ﾎﾞｰﾙｸﾞﾘｯﾄﾞｾﾝﾀを称す。

Note:
1. Ball pitch dimension is specified with the center of balls.
2. Datum A and B are axes defined by the ball grid array, not by the PKG outline.

Dimensions in millimeters

Term	Reference Symbol	Specification		
		Min	Nom	Max
Package length	D	3.86	3.91	3.96
Package width	E	4.21	4.26	4.31
Overhang dimension in length	ZD	0.305	0.355	0.405
Overhang dimension in width	ZE	0.48	0.53	0.58
Profile height	A	—	—	0.70
Stand-off height	A1	0.15	0.19	0.23
Wafer thickness	A2	0.36	0.40	0.44
	(A3)	—	—	—
Terminal diameter	b	0.22	0.27	0.32
Terminal pitch in length	eD		0.4	(BSC)
Terminal pitch in width	eE		0.4	(BSC)
Center terminal position in D-direction	SD		—	(BSC)
Center terminal position in E-direction	SE		—	(BSC)
Edge ball center to center in D-direction	D1		3.2	(BSC)
Edge ball center to center in D-direction	E1		3.2	(BSC)
Number of terminals	n		69	
Tolerance of package lateral profile	v		0.05	
Positional tolerance of terminals	x		0.05	
Coplanarity	y		0.08	

© 2013 Renesas Electronics Corporation. All rights reserved.

Figure E 69-Pin WLBGA (SWBG0069LA-A)

JEITA Package Code	RENESAS Code	Previous Code	MASS[Typ.]
P-TFLGA64-6x6-0.65	PTLG0064JA-A	64F0G	0.07g

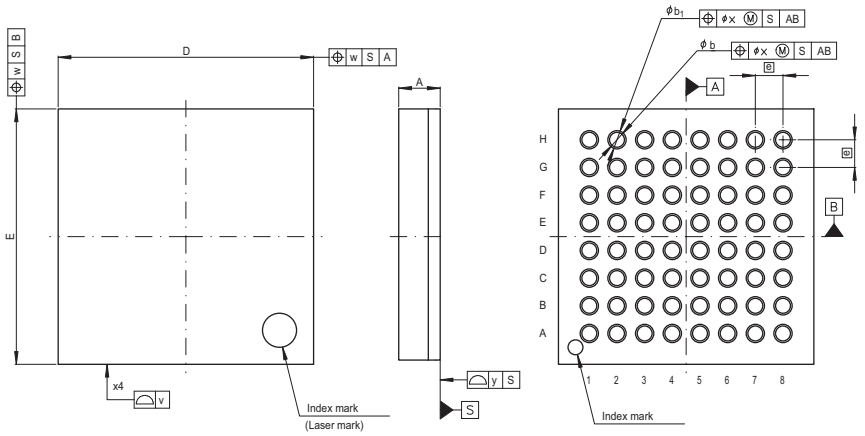

Reference Symbol	Dimension in Millimeters		
	Min	Nom	Max
D	—	6.0	—
E	—	6.0	—
v	—	—	0.15
w	—	—	0.20
A	—	—	1.05
e	—	0.65	—
b	0.31	0.35	0.39
b_1	0.39	0.43	0.47
x	—	—	0.08
y	—	—	0.10

Figure F 64-Pin TFLGA (PTLG0064JA-A)

JEITA Package Code	RENESAS Code	Previous Code	MASS[Typ.]
P-LFQFP100-14x14-0.50	PLQP0100KB-A	100P6Q-A / FP-100U / FP-100UV	0.6g

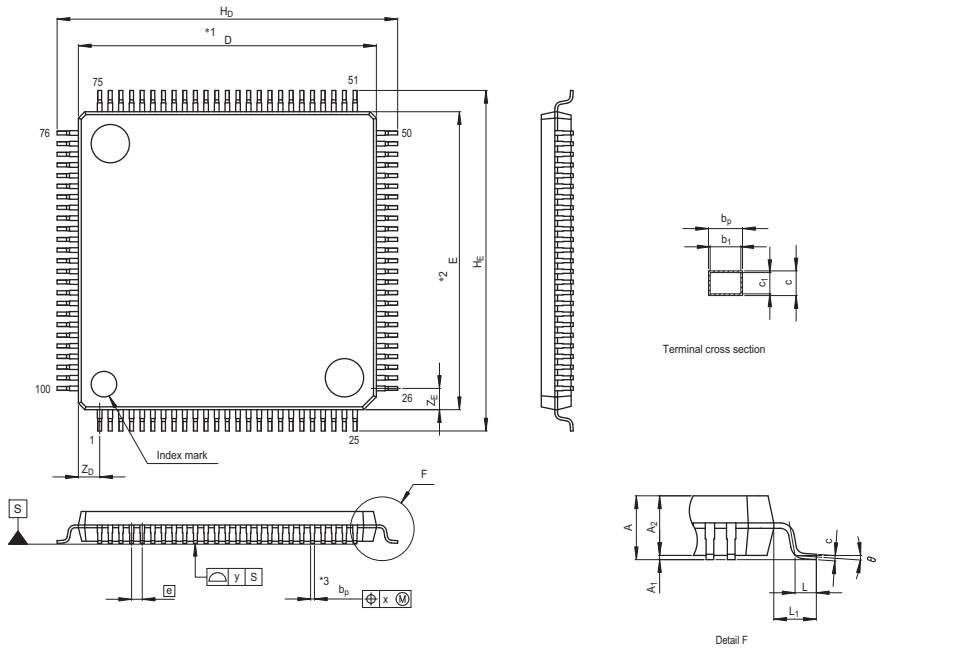

NOTE)
1. DIMENSIONS "*1" AND "*2" DO NOT INCLUDE MOLD FLASH.
2. DIMENSION "*3" DOES NOT INCLUDE TRIM OFFSET.

Reference Symbol	Dimension in Millimeters		
	Min	Nom	Max
D	13.9	14.0	14.1
E	13.9	14.0	14.1
A_2	—	1.4	—
H_D	15.8	16.0	16.2
H_E	15.8	16.0	16.2
A	—	—	1.7
A_1	0.05	0.1	0.15
b_p	0.15	0.20	0.25
b_1	—	0.18	—
c	0.09	0.145	0.20
c_1	—	0.125	—
θ	0°	—	8°
e	—	0.5	—
x	—	—	0.08
y	—	—	0.08
Z_D	—	1.0	—
Z_E	—	1.0	—
L	0.35	0.5	0.65
L_1	—	1.0	—

Figure G 100-Pin LQFP (PLQP0100KB-A)

JEITA Package Code	RENESAS Code	Previous Code	MASS[Typ.]
P-LFQFP80-12x12-0.50	PLQP0080KB-A	80P6Q-A	0.5g

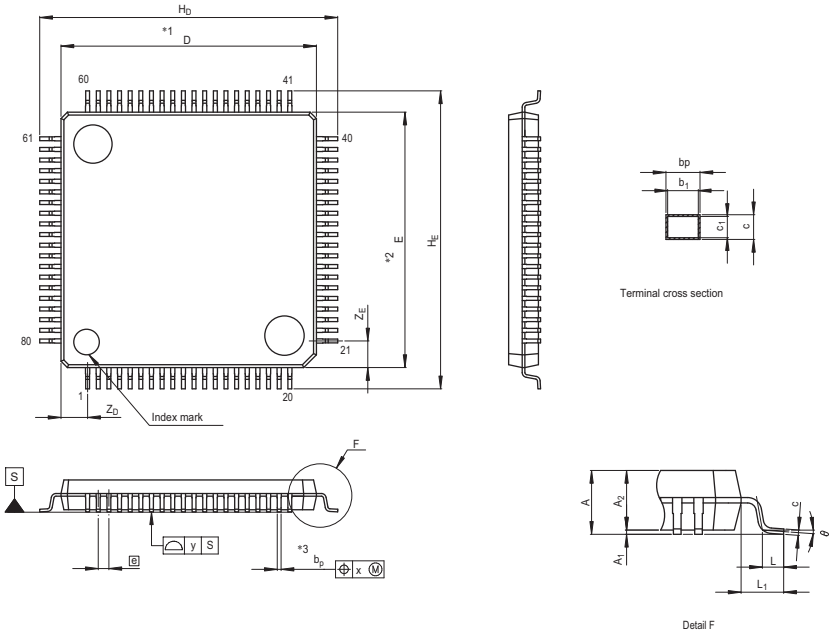

NOTE)
1. DIMENSIONS "*1" AND "*2" DO NOT INCLUDE MOLD FLASH.
2. DIMENSION "*3" DOES NOT INCLUDE TRIM OFFSET.

Reference Symbol	Dimension in Millimeters		
	Min	Nom	Max
D	11.9	12.0	12.1
E	11.9	12.0	12.1
A_2	—	1.4	—
H_D	13.8	14.0	14.2
H_E	13.8	14.0	14.2
A	—	—	1.7
A_1	0	0.1	0.2
b_p	0.15	0.20	0.25
b_1	—	0.18	—
c	0.09	0.145	0.20
c_1	—	0.125	—
θ	0°	—	10°
e	—	0.5	—
x	—	—	0.08
y	—	—	0.08
Z_D	—	1.25	—
Z_E	—	1.25	—
L	0.3	0.5	0.7
L_1	—	1.0	—

Figure H 80-Pin LQFP (PLQP0080KB-A)

JEITA Package Code	RENESAS Code	Previous Code	MASS[Typ.]
P-LQFP80-14x14-0.65	PLQP0080JA-A	FP-80W / FP-80WV	0.6g

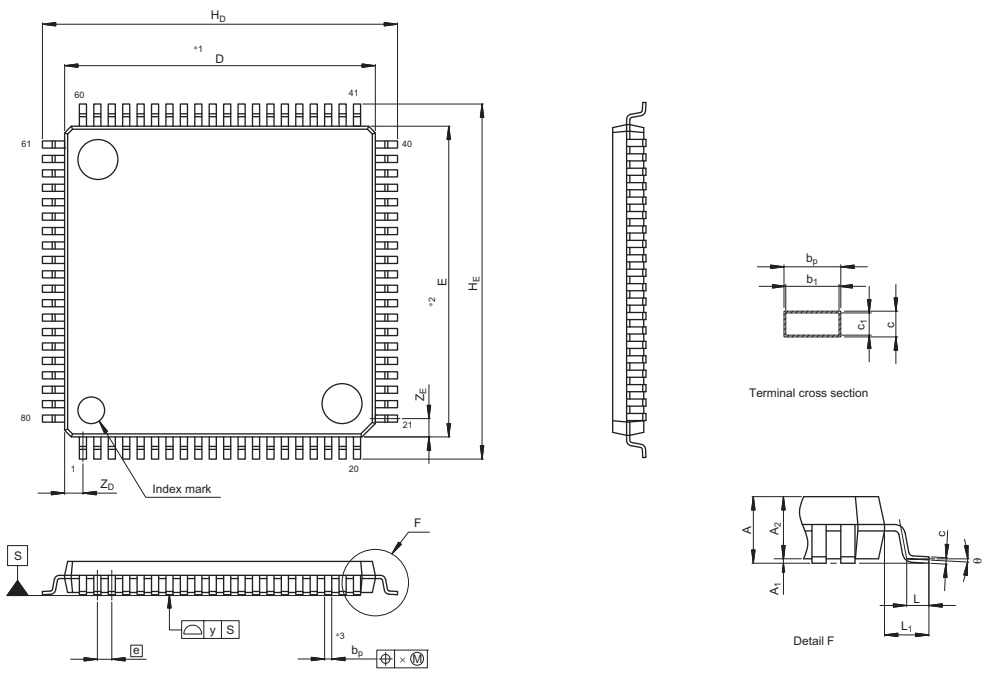

NOTE)
1. DIMENSIONS "*1" AND "*2" DO NOT INCLUDE MOLD FLASH.
2. DIMENSION "*3" DOES NOT INCLUDE TRIM OFFSET.

Reference Symbol	Dimension in Millimeters		
	Min	Nom	Max
D	13.9	14.0	14.1
E	13.9	14.0	14.1
A_2	—	1.4	—
H_D	15.8	16.0	16.2
H_E	15.8	16.0	16.2
A	—	—	1.7
A_1	0.05	0.1	0.15
b_p	0.27	0.32	0.37
b_1	—	0.30	—
c	0.09	0.145	0.20
c_1	—	0.125	—
θ	0°	—	8°
e	—	0.65	—
x	—	—	0.13
y	—	—	0.10
Z_D	—	0.825	—
Z_E	—	0.825	—
L	0.35	0.5	0.65
L_1	—	1.0	—

Figure I 80-Pin LQFP (PLQP0080JA-A)

JEITA Package Code	RENESAS Code	Previous Code	MASS[Typ.]
P-LFQFP64-10x10-0.50	PLQP0064KB-A	64P6Q-A / FP-64K / FP-64KV	0.3g

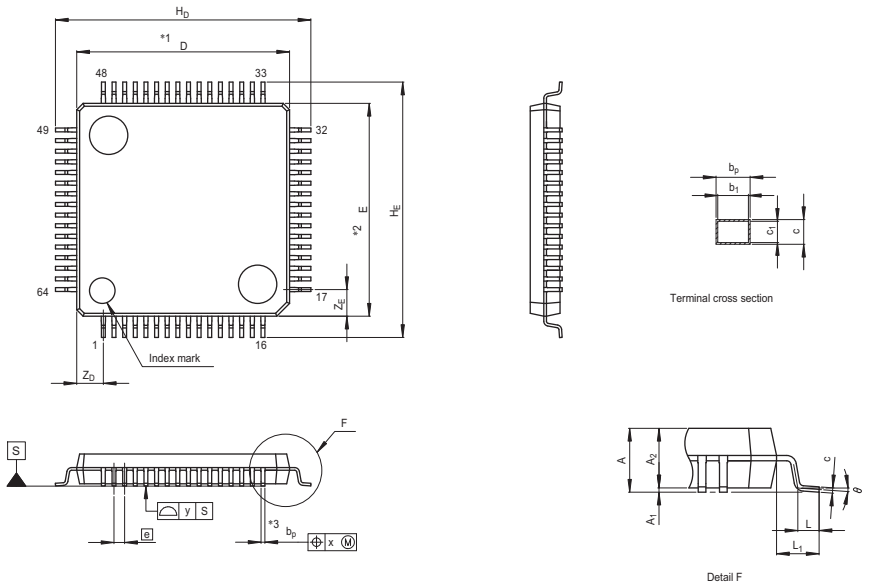

NOTE)
1. DIMENSIONS "*1" AND "*2" DO NOT INCLUDE MOLD FLASH.
2. DIMENSION "*3" DOES NOT INCLUDE TRIM OFFSET.

Reference Symbol	Dimension in Millimeters		
	Min	Nom	Max
D	9.9	10.0	10.1
E	9.9	10.0	10.1
A_2	—	1.4	—
H_D	11.8	12.0	12.2
H_E	11.8	12.0	12.2
A	—	—	1.7
A_1	0.05	0.1	0.15
b_p	0.15	0.20	0.25
b_1	—	0.18	—
c	0.09	0.145	0.20
c_1	—	0.125	—
θ	0°	—	8°
e	—	0.5	—
x	—	—	0.08
y	—	—	0.08
Z_D	—	1.25	—
Z_E	—	1.25	—
L	0.35	0.5	0.65
L_1	—	1.0	—

Figure J 64-Pin LQFP (PLQP0064KB-A)

JEITA Package Code	RENESAS Code	Previous Code	MASS[Typ.]
P-LQFP64-14x14-0.80	PLQP0064GA-A	64P6U-A/ —	0.7g

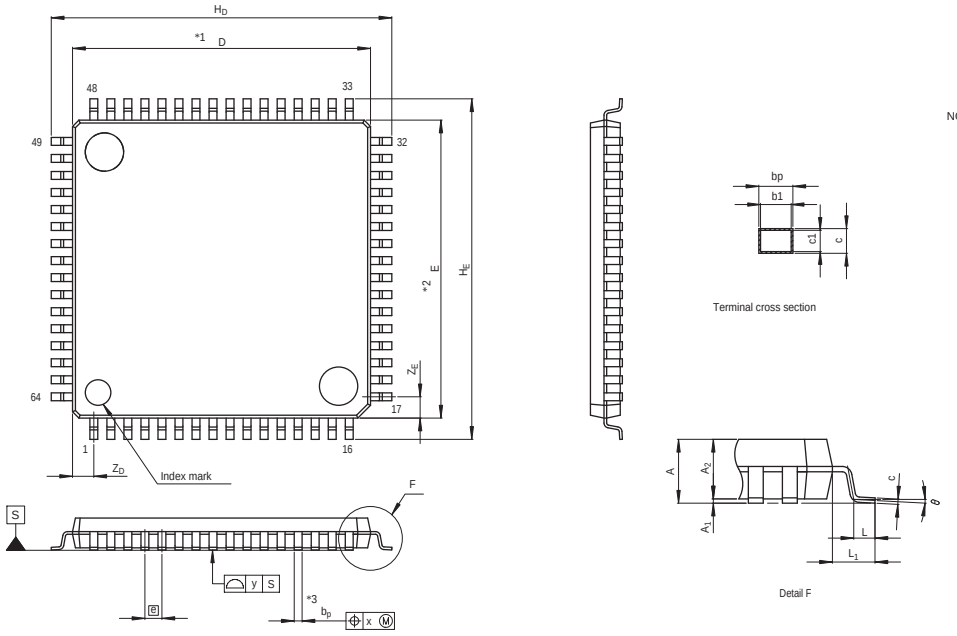

NOTE)
1. DIMENSIONS "*1" AND "*2" DO NOT INCLUDE MOLD FLASH.
2. DIMENSION "*3" DOES NOT INCLUDE TRIM OFFSET.

Reference Symbol	Dimension in Millimeters		
	Min	Nom	Max
D	13.9	14.0	14.1
E	13.9	14.0	14.1
A_2	—	1.4	—
H_D	15.8	16.0	16.2
H_E	15.8	16.0	16.2
A	—	—	1.7
A_1	0	0.1	0.2
b_p	0.32	0.37	0.42
b_1	—	0.35	—
c	0.09	0.145	0.20
c_1	—	0.125	—
θ	0°	—	8°
e	—	0.8	—
x	—	—	0.20
y	—	—	0.10
Z_D	—	1.0	—
Z_E	—	1.0	—
L	0.3	0.5	0.7
L_1	—	1.0	—

Figure K 64-Pin LQFP (PLQP0064GA-A)

JEITA Package Code	RENESAS Code	Previous Code	MASS[Typ.]
P-LFQFP48-7x7-0.50	PLQP0048KB-A	48P6Q-A	0.2g

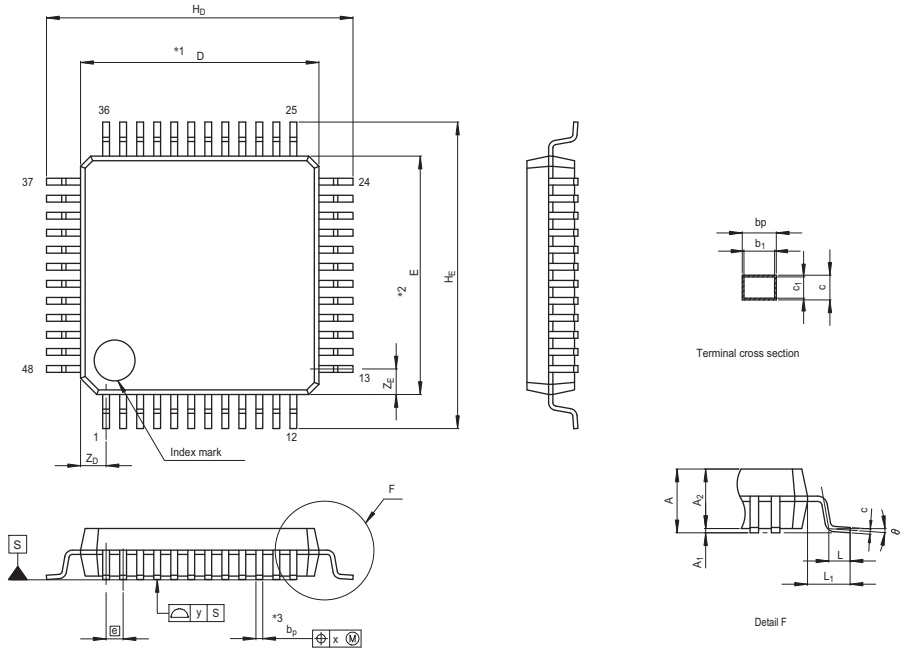

NOTE)
1. DIMENSIONS "*1" AND "*2" DO NOT INCLUDE MOLD FLASH.
2. DIMENSION "*3" DOES NOT INCLUDE TRIM OFFSET.

Reference Symbol	Dimension in Millimeters		
	Min	Nom	Max
D	6.9	7.0	7.1
E	6.9	7.0	7.1
A_2	—	1.4	—
H_D	8.8	9.0	9.2
H_E	8.8	9.0	9.2
A	—	—	1.7
A_1	0	0.1	0.2
b_p	0.17	0.22	0.27
b_1	—	0.20	—
c	0.09	0.145	0.20
c_1	—	0.125	—
θ	0°	—	8°
e	—	0.5	—
x	—	—	0.08
y	—	—	0.10
Z_D	—	0.75	—
Z_E	—	0.75	—
L	0.35	0.5	0.65
L_1	—	1.0	—

Figure L 48-Pin LQFP (PLQP0048KB-A)

REVISION HISTORY	RX210 Group Datasheet

Rev.	Date	Description	
		Page	Summary
0.50	Apr.15, 2011	—	First edition, issued
0.90	Aug.10, 2011	1. Overview	
		4	Table 1.1 Outline of Specifications: Power supply voltage/ Operating frequency, changed
		17, 21, 24, 26	Table 1.5 to Table 1.8 List of Pins and Pin Functions (Pin name: LVCMP2 → CMPA2), changed
		2. CPU	
		51	Table 2.14 Instructions that are Converted into Multiple Micro-Operations (multiplier: 32 × 32 → 64 bits), (memory source operand), added
		4. I/O Registers	
		63	Table 5.1 List of I/O Registers (Address Order), SOSCWTCR, LOCOWTCR2, HOCOWTCR2, added
		114 to 116	Table 5.1 List of I/O Registers (Address Order): Interrupt source priority register, changed
		5. Electrical Characteristics	
		85 to 137	Newly added
1.20	Nov 28, 2012	All	Information on chip versions A, B, and C, corresponding descriptions and notes, added 48-pin products added, PLQP0080JA-A 14 × 14 mm, 0.65-mm pitch, package deleted
		Features	
		1	Description changed
		1. Overview	
		2	1.1 Outline of Specifications: Description, changed
		2 to 5	Table 1.1 Outline of Specifications, changed Note 1, added
		6	Table 1.2 Comparison of Functions for Different Packages, changed
		7	Table 1.3 List of Products, changed
		8 to 10	Tables 1.4 to 1.7 List of Products, added
		11	Figure 1.1 How to Read the Product Part No., Memory Capacity, and Package Type: G item added
		12	Figure 1.2 Block Diagram, changed
		13	Table 1.8 Pin Functions: Power supply and On-chip emulator, changed
		13	Table 1.8 Pin Functions: Multiplexed bus, added
		18	Figure 1.4 Pin Assignments of the 100-Pin LQFP, changed
		21	Figure 1.7 Pin Assignments of the 48-Pin LQFP, added
		23	Table 1.9 List of Pins and Pin Functions (100-Pin TFLGA): Pin No. G4, changed
		25	Table 1.10 List of Pins and Pin Functions (100-Pin LQFP): Pin No. 21, changed
		28	Table 1.11 List of Pins and Pin Functions (80-Pin LQFP): Pin No. 19, changed
		30	Table 1.12 List of Pins and Pin Functions (64-Pin LQFP): Pin No. 15, changed
		3. Address Space	
		37	Figure 3.1 Memory Map in Each Operating Mode: Note 2, changed
		4. I/O Registers	
		41 to 63	Table 4.1 List of I/O Registers (Address Order): Number of Access, changed Voltage regulator control register, Timeout internal counter L, Timeout internal counter U, and PLL power control register, added
		63	Table 4.1 List of I/O Registers (Address Order): Notes 1 and 2, added
		—	Table 4.1 List of I/O Registers (Address Order): LOCO Wait Control Register 2 (LOCOWTCR2), deleted
		5. Electrical Characteristics	
		64 to 152	Description added
1.30	Jan 22, 2013	Features	
		1	On-chip flash memory for code, no wait states, On-chip SRAM, no wait states, Real-time clock, Up to 15 communications channels, Up to 20 extended-function timers, changed
		1.Overview	
		2 to 6	Table 1.1 Outline of Specifications, changed
		7	Table 1.2 Comparison of Functions for Different Packages, changed
		9	Table 1.4 List of Products Chip Version B: D Version (Ta = -40 to +85°C), changed
		10	Table 1.5 List of Products Chip Version B: G Version (Ta = -40 to +105°C), changed

Rev.	Date	Description	
		Page	Summary
1.30	Jan 22, 2013	11	Table 1.6 List of Products Chip Version C: D Version (Ta = -40 to +85°C), Table 1.7 List of Products Chip Version C: G Version (Ta = -40 to +105°C), changed
		12	Figure 1.1 How to Read the Product Part No., Memory Capacity, and Package Type, changed
		13	Figure 1.2 Block Diagram, changed
		14 to 17	Table 1.8 Pin Functions, changed
		18	Figure 1.3 Pin Assignments of the 145-Pin TFLGA (Upper Perspective View), added
		19	Figure 1.4 Pin Assignments of the 144-Pin LQFP, added
		25 to 28	Table 1.9 List of Pins and Pin Functions (145-Pin TFLGA), changed
		29 to 32	Table 1.10 List of Pins and Pin Functions (144-Pin LQFP), changed
		3. Address Space	
		48	Figure 3.1 Memory Map in Each Operating Mode, changed
		4. I/O Registers	
		52 to 81	Table 4.1 List of I/O Registers (Address Order, changed
		5. Electrical Characteristics	
		83	Table 5.2 DC Characteristics (1), Table 5.3 DC Characteristics (2), changed
		84 to 122	Table 5.6 DC Characteristics (5) to Table 5.20 DC Characteristics (19), changed Figure 5.1 Voltage Dependency in High-Speed .... for Chip Version A to Figure 5.34 Temperature Dependency in .... and 100 to 145 pins, changed
		158	Table 5.55 Timing of On-Chip Peripheral Modules (1), changed
		159	[512 Kbytes or less of flash memory and 48 to 100 pins] Table 5.56 Timing of On-Chip Peripheral Modules (2), added
		160, 161	[768 Kbytes/1 Mbyte of flash memory or 145/145 pins] Table 5.57 Timing of On-Chip Peripheral Modules (3), added
		162	Table 5.58 Timing of On-Chip Peripheral Modules (4), changed
		165	Figure 5.75 MTU/TPU Input/Output Timing, Figure 5.76 MTU/TPU Clock Input Timing, changed
		166	Figure 5.79 SCK Clock Input Timing, Figure 5.80 SCI Input/Output Timing: Clock Synchronous Mode, changed
		167	Figure 5.82 RSPI Clock Timing and Simple SPI Clock Timing, changed
		168	Figure 5.83 RSPI Timing (Master, CPHA = 0) .... and Simple SPI Timing (Master, CKPH = 1), Figure 5.84 RSPI Timing (Master, CPHA = 0) (Bit Rate: PCLKB Set to Divided by 2), changed
		169	Figure 5.85 RSPI Timing (Master, CPHA = 1) .... and Simple SPI Timing (Master, CKPH = 0), Figure 5.86 RSPI Timing (Master, CPHA = 1) (Bit Rate: PCLKB Set to Divided by 2), changed
		170	Figure 5.87 RSPI Timing (Slave, CPHA = 0) and Simple SPI Timing (Slave, CKPH = 1), Figure 5.88 RSPI Timing (Slave, CPHA = 1) and Simple SPI Timing (Slave, CKPH = 0), changed
		173	Table 5.64 A/D Conversion Characteristics (2), changed
		175	Figure 5.91 Illustration of A/D Converter Characteristic Terms, Absolute accuracy, changed
		184	Table 5.74 ROM (Flash Memory for Code Storage) Characteristics (1), changed
		189	Table 5.80 E2 DataFlash Characteristics (1), Table 5.81 E2 DataFlash Characteristics (2), changed
		Appendix 1. Package Dimensions	
		195	Figure A 145-Pin TFLGA (PTLG0145KA-A), added
		196	Figure B 144-Pin LQFP (PLQP0144KA-A), added
1.40	Feb 19, 2013	1. Overview	
		2 to 6	Table 1.1 Outline of Specifications, changed Note 2, added
		9	Table 1.4 List of Products Chip Version B: D Version (Ta = -40 to +85°C), changed
		10	Table 1.5 List of Products Chip Version B: G Version (Ta = -40 to +105°C), changed Note, added
		11	Table 1.6 List of Products Chip Version C: D Version (Ta = -40 to +85°C): Note 1, Table 1.7 List of Products Chip Version C: G Version (Ta = -40 to +105°C): Note 1 deleted, Note added
		12	Figure 1.1 How to Read the Product Part No., Memory Capacity, and Package Type, changed
		4. I/O Registers	
		58	Table 5.1 List of I/O Registers (Address Order), changed
		5. Electrical Characteristics	
		83	Table 5.4 DC Characteristics (3), changed
		88	Table 5.8 DC Characteristics (7), changed

Rev.	Date	Description	
		Page	Summary
1.40	Feb 19, 2013	96	Table 5.11 DC Characteristics (10), changed
		105	Table 5.14 DC Characteristics (13), changed
		114	Table 5.17 DC Characteristics (16), changed
		115	Figure 5.31 Voltage Dependency in Software Standby Mode (SOFTCUT[2:0] Bits = 110b) (Reference Data) for Chip Version B with 768 Kbytes/1 Mbyte of Flash Memory and 100 to 145 Pins, changed
		116	Figure 5.32 Temperature Dependency in Software Standby Mode (SOFTCUT[2:0] Bits = 110b) (Reference Data) for Chip Version B with 768 Kbytes/1 Mbyte of Flash Memory and 100 to 145 Pins, changed
		118	Table 5.18 DC Characteristics (17), changed
		119, 120	Table 5.19 DC Characteristics (18), changed
		121 to 123	Figure 5.35 Voltage Dependency in High-Speed Operating Mode (Reference Data) for Chip Version B with 512 Kbytes or Less of Flash Memory and 144 and 145 Pins to Figure 5.39 Voltage Dependency in Low-Speed Operating Mode 2 (Reference Data) for Chip Version B with 512 Kbytes or Less of Flash Memory and 144 and 145 Pins, added
		124	Table 5.20 DC Characteristics (19), changed
		125 to 127	Figure 5.40 Voltage Dependency in Software Standby Mode (SOFTCUT[2:0] Bits = 110b) (Reference Data) for Chip Version B with 512 Kbytes or Less of Flash Memory and 144 and 145 Pins to Figure 5.43 Temperature Dependency in Deep Software Standby Mode (DEEPCUT1 Bit = 1) (Reference Data) for Chip Version B with 512 Kbytes or Less of Flash Memory and 144 and 145 Pins, added
		128	Table 5.22 DC Characteristics (21), changed, Note 2 added
		144	Table 5.44 Clock Timing: Note 5, changed
		154	Table 5.49 Bus Timing (1), Table 5.50 Bus Timing (2), changed
		155	Table 5.51 Bus Timing (3), changed
		160	Table 5.52 Bus Timing (Multiplexed Bus) (1), Table 5.53 Bus Timing (Multiplexed Bus) (2), changed
		161	Table 5.54 Bus Timing (Multiplexed Bus) (3), changed
		164	Table 5.56 Timing of On-Chip Peripheral Modules (2), changed
		166	Table 5.57 Timing of On-Chip Peripheral Modules (3), changed
		177	Table 5.61 A/D Conversion Characteristics (1), Note 3, deleted Figure 5.99 AVCC to AVREFH Voltage Range, added
		179	Table 5.64 A/D Conversion Characteristics (2), Note 3, Table 5.65 A/D Conversion Characteristics (3), Note 3, deleted
		186	Table 5.72 Power-on Reset Circuit and Voltage Detection Circuit Characteristics (2), changed
1.50	Oct 18, 2013	All	69-Pin WLBGA package products, added
		Features	
		1	SWBG0069LA-A 3.91 × 4.26mm, 0.40-mm pitch, ■ Applications, added
		1. Overview	
		2	1.1 Outline of Specifications, changed
		2 to 6	Table 1.1 Outline of Specifications, Note 2, changed
		7	Table 1.2 Comparison of Functions for Different Packages, changed
		8	Table 1.3 List of Products Chip Version A: D Version (Ta = -40 to +85°C), changed, Note, added
		9	Table 1.4 List of Products Chip Version B: D Version (Ta = -40 to +85°C), Note 1, changed, Note added
		10	Table 1.5 List of Products Chip Version B: G Version (Ta = -40 to +105°C), Note, changed, Note 1, deleted
		11	Table 1.6 List of Products Chip Version C: D Version (Ta = -40 to +85°C), Table 1.7 List of Products Chip Version C: G Version (Ta = -40 to +105°C), Note, changed
		12	Figure 1.1 How to Read the Product Part No., Memory Capacity, and Package Type, changed
		23	Figure 1.8 Pin Assignments of the 69-Pin WLBGA, added
		43, 44	Table 1.14 List of Pins and Pin Functions (69-Pin WLBGA), added
		5. Electrical Characteristics	
		134	Table 5.21 DC Characteristics (20) Note, added
		149, 150	Table 5.44 Clock Timing Note 6, Note 7, added
		183	Table 5.61 A/D Conversion Characteristics (1) Note, changed, Note 4, deleted
		184	Table 5.62 Channel Classification for A/D Converter, changed
		185	Table 5.64 A/D Conversion Characteristics (2) Note, changed
		Appendix 1. Package Dimensions	
		211	Figure E 69-Pin WLBGA (SWBG0069LA-A), added

General Precautions in the Handling of MPU/MCU Products

The following usage notes are applicable to all MPU/MCU products from Renesas. For detailed usage notes on the products covered by this document, refer to the relevant sections of the document as well as any technical updates that have been issued for the products.

1. Handling of Unused Pins

   Handle unused pins in accord with the directions given under Handling of Unused Pins in the manual.

   — The input pins of CMOS products are generally in the high-impedance state. In operation with an unused pin in the open-circuit state, extra electromagnetic noise is induced in the vicinity of LSI, an associated shoot-through current flows internally, and malfunctions occur due to the false recognition of the pin state as an input signal become possible. Unused pins should be handled as described under Handling of Unused Pins in the manual.

2. Processing at Power-on

   The state of the product is undefined at the moment when power is supplied.

   — The states of internal circuits in the LSI are indeterminate and the states of register settings and pins are undefined at the moment when power is supplied.
   In a finished product where the reset signal is applied to the external reset pin, the states of pins are not guaranteed from the moment when power is supplied until the reset process is completed.
   In a similar way, the states of pins in a product that is reset by an on-chip power-on reset function are not guaranteed from the moment when power is supplied until the power reaches the level at which resetting has been specified.

3. Prohibition of Access to Reserved Addresses

   Access to reserved addresses is prohibited.

   — The reserved addresses are provided for the possible future expansion of functions. Do not access these addresses; the correct operation of LSI is not guaranteed if they are accessed.

4. Clock Signals

   After applying a reset, only release the reset line after the operating clock signal has become stable. When switching the clock signal during program execution, wait until the target clock signal has stabilized.

   — When the clock signal is generated with an external resonator (or from an external oscillator) during a reset, ensure that the reset line is only released after full stabilization of the clock signal. Moreover, when switching to a clock signal produced with an external resonator (or by an external oscillator) while program execution is in progress, wait until the target clock signal is stable.

5. Differences between Products

   Before changing from one product to another, i.e. to a product with a different part number, confirm that the change will not lead to problems.

   — The characteristics of an MPU or MCU in the same group but having a different part number may differ in terms of the internal memory capacity, layout pattern, and other factors, which can affect the ranges of electrical characteristics, such as characteristic values, operating margins, immunity to noise, and amount of radiated noise. When changing to a product with a different part number, implement a system-evaluation test for the given product.

Notice

1. Descriptions of circuits, software and other related information in this document are provided only to illustrate the operation of semiconductor products and application examples. You are fully responsible for the incorporation of these circuits, software, and information in the design of your equipment. Renesas Electronics assumes no responsibility for any losses incurred by you or third parties arising from the use of these circuits, software, or information.
2. Renesas Electronics has used reasonable care in preparing the information included in this document, but Renesas Electronics does not warrant that such information is error free. Renesas Electronics assumes no liability whatsoever for any damages incurred by you resulting from errors in or omissions from the information included herein.
3. Renesas Electronics does not assume any liability for infringement of patents, copyrights, or other intellectual property rights of third parties by or arising from the use of Renesas Electronics products or technical information described in this document. No license, express, implied or otherwise, is granted hereby under any patents, copyrights or other intellectual property rights of Renesas Electronics or others.
4. You should not alter, modify, copy, or otherwise misappropriate any Renesas Electronics product, whether in whole or in part. Renesas Electronics assumes no responsibility for any losses incurred by you or third parties arising from such alteration, modification, copy or otherwise misappropriation of Renesas Electronics product.
5. Renesas Electronics products are classified according to the following two quality grades: "Standard" and "High Quality". The recommended applications for each Renesas Electronics product depends on the product's quality grade, as indicated below.
   "Standard": Computers; office equipment; communications equipment; test and measurement equipment; audio and visual equipment; home electronic appliances; machine tools; personal electronic equipment; and industrial robots etc.
   "High Quality": Transportation equipment (automobiles, trains, ships, etc.); traffic control systems; anti-disaster systems; anti-crime systems; and safety equipment etc.
   Renesas Electronics products are neither intended nor authorized for use in products or systems that may pose a direct threat to human life or bodily injury (artificial life support devices or systems, surgical implantations etc.), or may cause serious property damages (nuclear reactor control systems, military equipment etc.). You must check the quality grade of each Renesas Electronics product before using it in a particular application. You may not use any Renesas Electronics product for any application for which it is not intended. Renesas Electronics shall not be in any way liable for any damages or losses incurred by you or third parties arising from the use of any Renesas Electronics product for which the product is not intended by Renesas Electronics.
6. You should use the Renesas Electronics products described in this document within the range specified by Renesas Electronics, especially with respect to the maximum rating, operating supply voltage range, movement power voltage range, heat radiation characteristics, installation and other product characteristics. Renesas Electronics shall have no liability for malfunctions or damages arising out of the use of Renesas Electronics products beyond such specified ranges.
7. Although Renesas Electronics endeavors to improve the quality and reliability of its products, semiconductor products have specific characteristics such as the occurrence of failure at a certain rate and malfunctions under certain use conditions. Further, Renesas Electronics products are not subject to radiation resistance design. Please be sure to implement safety measures to guard them against the possibility of physical injury, and injury or damage caused by fire in the event of the failure of a Renesas Electronics product, such as safety design for hardware and software including but not limited to redundancy, fire control and malfunction prevention, appropriate treatment for aging degradation or any other appropriate measures. Because the evaluation of microcomputer software alone is very difficult, please evaluate the safety of the final products or systems manufactured by you.
8. Please contact a Renesas Electronics sales office for details as to environmental matters such as the environmental compatibility of each Renesas Electronics product. Please use Renesas Electronics products in compliance with all applicable laws and regulations that regulate the inclusion or use of controlled substances, including without limitation, the EU RoHS Directive. Renesas Electronics assumes no liability for damages or losses occurring as a result of your noncompliance with applicable laws and regulations.
9. Renesas Electronics products and technology may not be used for or incorporated into any products or systems whose manufacture, use, or sale is prohibited under any applicable domestic or foreign laws or regulations. You should not use Renesas Electronics products or technology described in this document for any purpose relating to military applications or use by the military, including but not limited to the development of weapons of mass destruction. When exporting the Renesas Electronics products or technology described in this document, you should comply with the applicable export control laws and regulations and follow the procedures required by such laws and regulations.
10. It is the responsibility of the buyer or distributor of Renesas Electronics products, who distributes, disposes of, or otherwise places the product with a third party, to notify such third party in advance of the contents and conditions set forth in this document, Renesas Electronics assumes no responsibility for any losses incurred by you or third parties as a result of unauthorized use of Renesas Electronics products.
11. This document may not be reproduced or duplicated in any form, in whole or in part, without prior written consent of Renesas Electronics.
12. Please contact a Renesas Electronics sales office if you have any questions regarding the information contained in this document or Renesas Electronics products, or if you have any other inquiries.

(Note 1) "Renesas Electronics" as used in this document means Renesas Electronics Corporation and also includes its majority-owned subsidiaries.

(Note 2) "Renesas Electronics product(s)" means any product developed or manufactured by or for Renesas Electronics.

SALES OFFICES Renesas Electronics Corporation http://www.renesas.com

Refer to "http://www.renesas.com/" for the latest and detailed information.

Renesas Electronics America Inc.
2880 Scott Boulevard Santa Clara, CA 95050-2554, U.S.A.
Tel: +1-408-588-6000, Fax: +1-408-588-6130

Renesas Electronics Canada Limited
1101 Nicholson Road, Newmarket, Ontario L3Y 9C3, Canada
Tel: +1-905-898-5441, Fax: +1-905-898-3220

Renesas Electronics Europe Limited
Dukes Meadow, Millboard Road, Bourne End, Buckinghamshire, SL8 5FH, U.K
Tel: +44-1628-651-700, Fax: +44-1628-651-804

Renesas Electronics Europe GmbH
Arcadiastrasse 10, 40472 Düsseldorf, Germany
Tel: +49-211-65030, Fax: +49-211-6503-1327

Renesas Electronics (China) Co., Ltd.
7th Floor, Quantum Plaza, No.27 ZhiChunLu Haidian District, Beijing 100083, P.R.China
Tel: +86-10-8235-1155, Fax: +86-10-8235-7679

Renesas Electronics (Shanghai) Co., Ltd.
Unit 204, 205, AZIA Center, No.1233 Lujiazui Ring Rd., Pudong District, Shanghai 200120, China
Tel: +86-21-5877-1818, Fax: +86-21-6887-7858 / -7898

Renesas Electronics Hong Kong Limited
Unit 1601-1613, 16/F., Tower 2, Grand Century Place, 193 Prince Edward Road West, Mongkok, Kowloon, Hong Kong
Tel: +852-2886-9318, Fax: +852 2886-9022/9044

Renesas Electronics Taiwan Co., Ltd.
13F, No. 363, Fu Shing North Road, Taipei, Taiwan
Tel: +886-2-8175-9600, Fax: +886 2-8175-9670

Renesas Electronics Singapore Pte. Ltd.
80 Bendemeer Road, Unit #06-02 Hyflux Innovation Centre Singapore 339949
Tel: +65-6213-0200, Fax: +65-6213-0300

Renesas Electronics Malaysia Sdn.Bhd.
Unit 906, Block B, Menara Amcorp, Amcorp Trade Centre, No. 18, Jln Persiaran Barat, 46050 Petaling Jaya, Selangor Darul Ehsan, Malaysia
Tel: +60-3-7955-9390, Fax: +60-3-7955-9510

Renesas Electronics Korea Co., Ltd.
11F., Samik Lavied' or Bldg., 720-2 Yeoksam-Dong, Kangnam-Ku, Seoul 135-080, Korea
Tel: +82-2-558-3737, Fax: +82-2-558-5141

© 2013 Renesas Electronics Corporation. All rights reserved.
Colophon 2.2