PART NUMBER	ENGINEERING NO.	LENGTH
848569113	84856-9113	3.28" +2.19" - 0 [1.0M +55.6mm - 0]
848569114	84856-9114	16.40' +6.50" - 0 [5.0M +165.1mm - 0]
848569115	84856-9115	32.80' +12.50" - 0 [10.0M +317.5mm - 0]

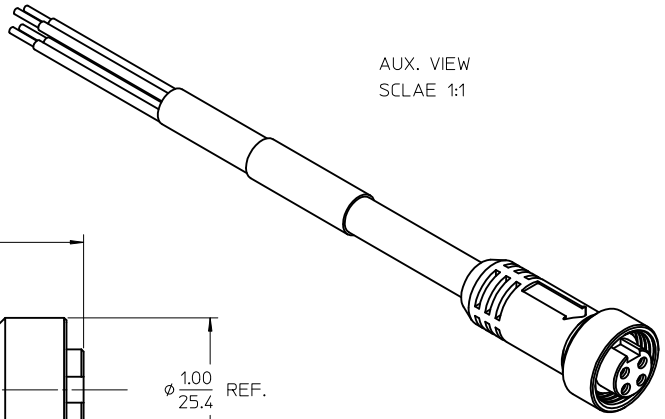

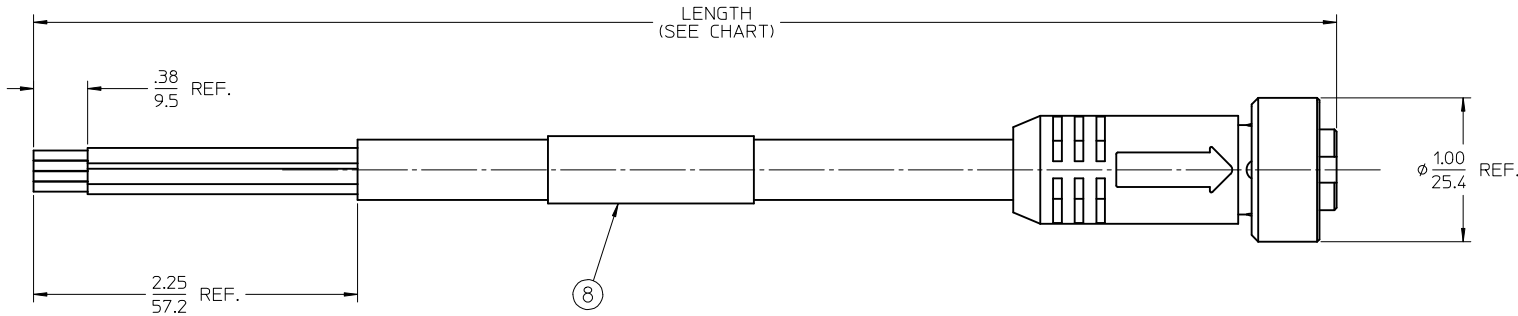

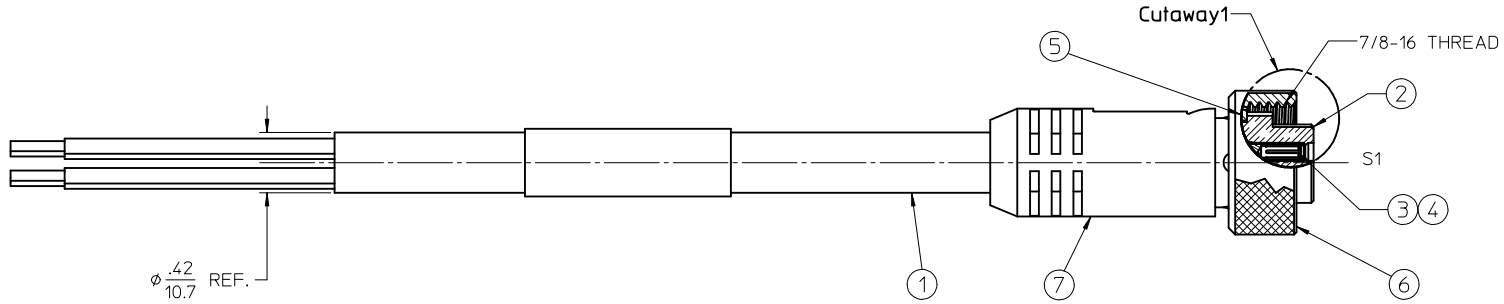

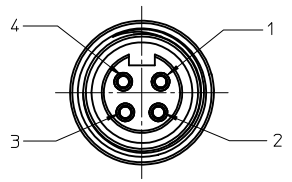

NOTES:
1. MATERIAL: SEE TABLE
2. FINISHES: SEE TABLE
3. CABLE ASSEMBLIES ARE BAGGED SEPERATELY
   IN POLY BAGS WITH BARCODE LABEL ATTACHED
   TO OUTSIDE OF BAG
4. WRAP LABEL IS MARKED WITH P/N, DATE CODE
   VOLTAGE & AMPERAGE
5. MATES WITH: MINI CHANGE, A-SIZE 4 POLE RECEPTACLE
6. ELECTRICAL SPECIFICATIONS:
   VOLTAGE RATING: 600V
   CURRENT RATING: 10 AMPS
7. ASSEMBLY IS RoHS COMPLIANT

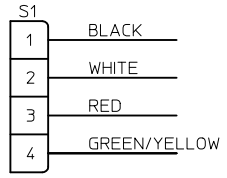

WIRING DIAGRAM

ITEM	QTY.	DESCRIPTION	MATERIAL	FINISH
8	1	LABEL	PLASTIC FILM	BLACK/YELLOW
7	1	OVERMOLD	PVC	YELLOW
6	1	COUPLING NUT	BRASS	NICKEL PLATED
5	1	FRICTION RING	NYLON	WHITE
4	4	SOCKET SLEEVE	ST. STEEL	
3	4	CONTACT SOCKET	BRASS	GOLD PLATED
2	1	INSERT, FEMALE, 4 POLE	PVC	YELLOW
1	1	CABLE, 16/4	PVC JACKET	YELLOW

RELEASED
EC NO: WNA2010-0686 2010/05/13
DRWN:BWOODMAN 2010/05/14
CHKD:YOU
APPR: JFMURPHY 2010/05/19
DESCRIPTION
B
REV

QUALITY SYMBOLS
▼=0
▽=0

GENERAL TOLERANCES (UNLESS SPECIFIED)

	mm	INCH
4 PLACES	± ---	± ---
3 PLACES	± ---	± ---
2 PLACES	± ---	± .01
1 PLACE	± 0.3	± ---
ANGULAR ±1/2°		

DRAFT WHERE APPLICABLE MUST REMAIN WITHIN DIMENSIONS

DIMENSION STYLE: IN/MM
SCALE: 1.5:1
DESIGN UNITS: INCH
THIRD ANGLE PROJECTION

DRAWN BY	R.STONE
DATE	2010/01/06
CHECKED BY	B.WOODMAN
DATE	2010/01/15
APPROVED BY	JFMURPHY
DATE	2010/01/22
MATERIAL NO.	SEE CHART
SIZE	C

TITLE: MINI-CHANGE 4 POLE FEMALE, STRAIGHT

MOLEX INCORPORATED

DOCUMENT NO. SD-84856-008
SHEET NO. 1 OF 1

THIS DRAWING CONTAINS INFORMATION THAT IS PROPRIETARY TO MOLEX INCORPORATED AND SHOULD NOT BE USED WITHOUT WRITTEN PERMISSION