| CATALOG NUMBER | MATERIAL NUMBER | CONDUIT SIZE | N.P.T. FITTING SIZE | LENGTH "M" | DIAMETER "A" *REF.* | LENGTH "B" *REF.* | LENGTH "C" *REF.* | PRODUCT SELECTION NUMBER | UL LISTED | CSA APRVD |
|---|---|---|---|---|---|---|---|---|---|---|
| 36440 | 1300960056 | 3/8" | 1/2" | 3.875±0.500 / 98.43±12.70 | 1.0 / 25 | 1.13 / 28.7 | 0.63 / 16.0 | STB038P | YES | YES |
| 36370 | 1300960034 | 1/2" | 1/2" | 4.625±0.500 / 117.48±12.70 | 1.2 / 30 | 1.25 / 31.8 | 0.63 / 16.0 | STB050P | | |
| 36371 | 1300960036 | 3/4" | 3/4" | 5.750±0.500 / 146.05±12.70 | 1.4 / 36 | 1.50 / 38.1 | 0.63 / 16.0 | STB075P | | |
| 36372 | 1300960037 | 1" | 1" | 7.000±0.500 / 177.80±12.70 | 1.7 / 43 | 1.81 / 45.9 | 0.75 / 19.1 | STB100P | | |
| 36373 | 1300960038 | 1-1/4" | 1-1/4" | 8.125±1.000 / 206.38±25.40 | 2.0 / 51 | 2.31 / 58.7 | 0.63 / 16.0 | STB125P | | |
| 36374 | 1300960039 | 1-1/2" | 1-1/2" | 9.250±1.000 / 234.95±25.40 | 2.5 / 64 | 2.63 / 66.8 | 0.63 / 16.0 | STB150P | | |
| 36375 | 1300960040 | 2" | 2" | 11.500±1.000 / 292.10±25.40 | 3.0 / 76 | 3.19 / 81.0 | 0.69 / 17.5 | STB200P | | |
| 37030 | 1300960065 | 2-1/2" | 2-1/2" | 11.250±1.000 / 285.75±25.40 | 3.6 / 91 | 3.94 / 100.1 | 1.06 / 26.9 | STB250P | | |
| 37031 | 1300960066 | 3" | 3" | 14.750±1.500 / 374.65±38.10 | 4.3 / 109 | 4.38 / 111.3 | 1.19 / 30.2 | STB300P | | |
| 37032 | 1300960067 | 4" | 4" | 16.250±1.500 / 412.75±38.10 | 5.4 / 137 | 5.50 / 139.7 | 1.25 / 31.8 | STB400P | | |

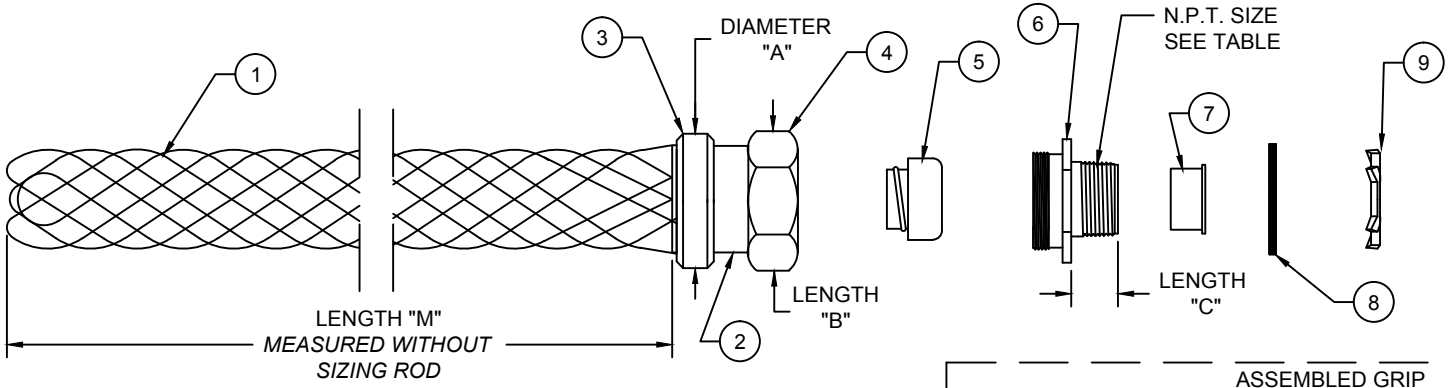


ASSEMBLED GRIP

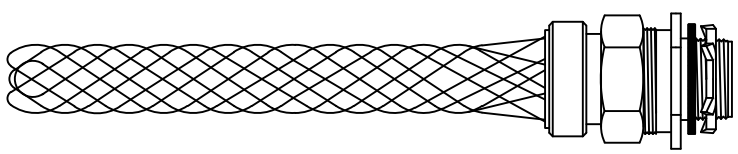

INSTRUCTIONS INCLUDED WITH GRIP

| ITEM | DESCRIPTION | MATERIAL |
|---|---|---|
| 1 | WIRE MESH | STAINLESS STEEL |
| 2 | INNER RING | ZINC PLATED STEEL |
| 3 | OUTER RING | ALUMINUM |
| 4 | COMPRESSION NUT | ZINC PLATED STEEL OR MALLEABLE IRON |
| 5 | FERRULE | ZINC PLATED STEEL OR ALUMINUM |
| 6 | THREADED BODY | ZINC PLATED STEEL OR MALLEABLE IRON |
| 7 | THROAT INSULATION | PLASTIC |
| 8 | GASKET | NEOPRENE |
| 9 | LOCK NUT | ZINC PLATED STEEL |

RELEASE SALES DRAWING
EC NO: IPG2015-0536 2014/09/22
DRWN: HRUIZ01 2014/09/22
CHKD: HKNEELAN 2014/09/22
APPR: JFMURPHY 2015/04/27
DESCRIPTION
A
REV

QUALITY SYMBOLS
▼=0
(C)=0

GENERAL TOLERANCES (UNLESS SPECIFIED)

| | mm | INCH |
|---|---|---|
| 4 PLACES | ±--- | ±--- |
| 3 PLACES | ±--- | ±.005 |
| 2 PLACES | ±.13 | ±.010 |
| 1 PLACE | ±.25 | ±.020 |

ANGULAR ±1/2°

DRAFT WHERE APPLICABLE MUST REMAIN WITHIN DIMENSIONS

DIMENSION STYLE: INCH/MM
SCALE: NTS
DESIGN UNITS: INCH
THIRD ANGLE PROJECTION

DRAWN BY: HRUIZ01 DATE: 2014/09/22
CHECKED BY: HKNEELAN DATE: 2014/09/22
APPROVED BY: JFMURPHY DATE: 2015/04/27

TITLE: STRAIN RELIEF LIQUID TIGHT CONDUIT STRAIGHT-MALE

molex MOLEX INCORPORATED

MATERIAL NO.: SEE TABLE
DOCUMENT NO.: SD-130096-100
SHEET NO.: 1 OF 1
SIZE: A

THIS DRAWING CONTAINS INFORMATION THAT IS PROPRIETARY TO MOLEX INCORPORATED AND SHOULD NOT BE USED WITHOUT WRITTEN PERMISSION