ISL88031

Quintuple Voltage Monitor

FN8227
Rev 2.00
June 9, 2009

The ISL88031 is a quintuple voltage-monitoring supervisor combining competitive reset threshold accuracy and low power consumption. This device combines popular functions such as Power-On Reset, Undervoltage Supply Supervision, reset signaling and Manual Reset. Monitoring up to five different voltages in a small 8 Ld MSOP package, the ISL88031 devices can help to lower system cost, reduce board space requirements, and increase the reliability of multi-voltage systems.

Low V_{DD} detection circuitry protects the user's system from low voltage conditions, resetting the system when V_{DD} or any of the other monitored power supply voltages fall below their respective minimum voltage thresholds. The reset signal remains asserted until all of these voltages return to proper operating levels and stabilize.

With two of the five voltage monitors being preset for common supplies, users can adjust the threshold voltages of the third, fourth, and fifth voltage monitors in order to meet specific system level requirements.

Pinout

ISL88031
(8 LD MSOP)
TOP VIEW

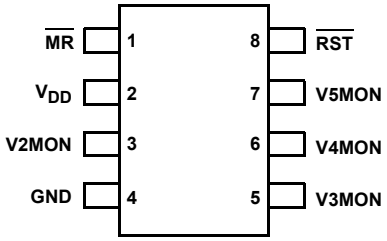

Features

- Quintuple Voltage Monitoring
- Fixed-Voltage Options Allow Precise Monitoring of +5.0V, +3.3V, +3.0V, +2.5V and +1.8V Power Supplies
- Adjustable Voltage Inputs Monitor Voltages > 0.6V
- 120ms Nominal Reset Pulse Width
- Manual Reset Capability
- Reset Signals Valid Down to V_{DD} = 1V
- Accurate ±1.8% Voltage Threshold
- Immune to Power-Supply Transients
- Low 19µA Maximum Supply Current at 5V
- Pb-Free (RoHS Compliant)

Applications

- Telecom and Datacom Systems
- Routers and Servers
- Access Concentrators
- Cable/Satellite Applications
- Desktop and Notebook Computer Systems
- Data Storage Equipment
- Set-Top Boxes
- Industrial Equipment
- Multi-Voltage Systems

Ordering Information

PART NUMBER (Notes 1, 2)	PART MARKING	V_{TH1}	V_{TH2}	TEMP RANGE (°C)	PACKAGE (Pb-free)	PKG. DWG. #
ISL88031IU8HFZ	AMA	4.634V	3.078V	-40 to +85	8 Ld MSOP	M8.118
ISL88031IU8HEZ	ANZ	4.634V	2.955V	-40 to +85	8 Ld MSOP	M8.118
ISL88031IU8HCZ	APR	4.634V	2.333V	-40 to +85	8 Ld MSOP	M8.118
ISL88031IU8HAZ	APS	4.634V	1.683V	-40 to +85	8 Ld MSOP	M8.118
ISL88031IU8ECZ	APT	2.866V	2.333V	-40 to +85	8 Ld MSOP	M8.118
ISL88031IU8EAZ	APZ	2.866V	1.683V	-40 to +85	8 Ld MSOP	M8.118

NOTES:

1. Add "-TK" suffix for tape and reel. Please refer to TB347 for details on reel specifications.
2. These Intersil Pb-free plastic packaged products employ special Pb-free material sets, molding compounds/die attach materials, and 100% matte tin plate plus anneal (e3 termination finish, which is RoHS compliant and compatible with both SnPb and Pb-free soldering operations). Intersil Pb-free products are MSL classified at Pb-free peak reflow temperatures that meet or exceed the Pb-free requirements of IPC/JEDEC J STD-020.

Pin Descriptions

PIN NUMBER	PIN NAME	FUNCTION
1	$\overline{MR}$	Active-Low Open Drain Manual Reset Input with internal pull-up resistor
2	V_{DD}	Chip Bias Input and integrated preset undervoltage monitor
3	V2MON	Second Preset Undervoltage Monitor Input
4	GND	Ground
5	V3MON	Adjustable Third Undervoltage Monitor Input
6	V4MON	Adjustable Fourth Undervoltage Monitor Input
7	V5MON	Adjustable Fifth Undervoltage Monitor Input
8	$\overline{RST}$	Active-Low Open Drain Reset Output

Functional Block Diagram

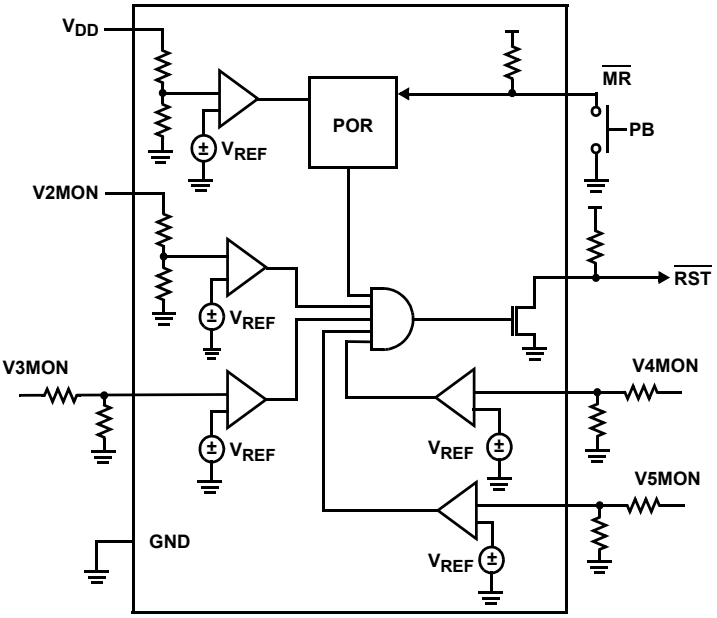

Absolute Maximum Ratings

Temperature Under Bias . . . . . .-40°C to +125°C
Voltage on any Pin With Respect to Gnd. . . . . .-1.0V to +7V
DC Output Current. 5mA

Recommended Operating Conditions

Operating Temperature Range (Industrial) . . . . . .-40°C to +85°C
Storage Temperature Range . . . . . .-65°C to +150°C

Thermal Information

Thermal Resistance (Typical, Note 3) θ_{JA} (°C/W)
8 Ld MSOP Package 175
Pb-free Reflow Profile . . . . . .see link below
http://www.intersil.com/pbfree/Pb-FreeReflow.asp

CAUTION: Do not operate at or near the maximum ratings listed for extended periods of time. Exposure to such conditions may adversely impact product reliability and result in failures not covered by warranty.

NOTE:

3. θ_{JA} is measured with the component mounted on a high effective thermal conductivity test board in free air. See Tech Brief TB379 for details.

Electrical Specifications

Over the recommended operating conditions, unless otherwise specified. Parameters with MIN and/or MAX limits are 100% tested at +25°C, unless otherwise specified. Temperature limits established by characterization and are not production tested.

SYMBOL	PARAMETER	TEST CONDITIONS	MIN	TYP	MAX	UNITS
V_{DD}	Supply Voltage Range		2.0		5.5	V
I_{DD1}	V_{DD} Supply Current	V_{DD} = 5.0V		14	19	µA
I_{DD2}	V2MON Input Current	V2MON = 3.3V		5.5	7	µA
I_{DDA}	V3MON, V4MON, V5MON Input Current	V3MON, V4MON, V5MON = 1.0V		19	100	nA
VOLTAGE THRESHOLDS						
V_{TH1}	ISL88031IU8HxZ Fixed Voltage Trip Point for V_{DD}	+25°C	4.550	4.634	4.717	V
		0°C to +70°C	4.461	4.634	4.807	V
		-40°C to +85°C	4.453	4.634	4.815	V
	ISL88031IU8ExZ Fixed Voltage Trip Point for V_{DD}	+25°C	2.814	2.866	2.917	V
		0°C to +70°C	2.759	2.866	2.973	V
		40°C to +85°C	2.754	2.866	2.978	V
$V_{TH1HYST}$	Hysteresis of V_{TH1}	V_{TH1} = 4.64V		46		mV
		V_{TH1} = 2.90V		29		mV
V_{TH2}	ISL88031IU8xFZ Fixed Voltage Trip Point for V2MON	+25°C	3.022	3.078	3.133	V
		0°C to +70°C	2.963	3.078	3.193	V
		-40°C to +85°C	2.958	3.078	3.198	V
	ISL88031IU8xEZ Fixed Voltage Trip Point for V2MON	+25°C	2.901	2.955	3.008	V
		0°C to +70°C	2.845	2.955	3.065	V
		-40°C to +85°C	2.840	2.955	3.070	V
	ISL88031IU8xCZ Fixed Voltage Trip Point for V2MON	+25°C	2.291	2.333	2.375	V
		0°C to +70°C	2.246	2.333	2.420	V
		-40°C to +85°C	2.242	2.333	2.424	V
	ISL88031IU8xAZ Fixed Voltage Trip Point for V2MON	+25°C	1.652	1.683	1.713	V
		0°C to +70°C	1.620	1.683	1.746	V
		-40°C to +85°C	1.617	1.683	1.749	V

Electrical Specifications Over the recommended operating conditions, unless otherwise specified. Parameters with MIN and/or MAX limits are 100% tested at +25°C, unless otherwise specified. Temperature limits established by characterization and are not production tested. **(Continued)**

SYMBOL	PARAMETER	TEST CONDITIONS	MIN	TYP	MAX	UNITS
$V_{TH2HYST}$	Hysteresis of V_{TH2}	V_{TH2} = 3.09V		37		mV
		V_{TH2} = 2.92V		29		mV
		V_{TH2} = 2.32V		23		mV
		V_{TH2} = 1.69V		17		mV
V_{REF}	V_{TH} for V3MON, V4MON, V5MON Adj. Reset Threshold Voltage	+25°C	0.589	0.600	0.611	V
		0°C to +70°C	0.578	0.600	0.622	V
		-40°C to +85°C	0.577	0.600	0.623	V
$V_{REFHYST}$	Hysteresis Voltage			3		mV
RESET						
V_{OL}	Reset Output Voltage Low	$V_{DD} \geq$ 3.3V, Sinking 2.5mA		0.05	0.40	V
		V_{DD} < 3.3V, Sinking 1.5mA		0.05	0.40	V
t_{RPD}	V_{TH} to Reset Asserted Delay			6		µs
t_{POR}	POR Timeout Delay		80	120	180	ms
C_{LOAD}	Load Capacitance on Reset Pins			5		pF
MANUAL RESET						
V_{MRL}	$\overline{MR}$ Input Voltage Low				0.8	V
V_{MRH}	$\overline{MR}$ Input Voltage High		V_{DD} - 0.6			V
t_{MR}	$\overline{MR}$ Minimum Pulse Width		550			ns
R_{PU}	Internal Pull-Up Resistor			10		kΩ

Pin Descriptions

$\overline{RST}$

The $\overline{RST}$ output is an open drain output, which is asserted low whenever:

1. the device is initially powered up to 1V or,
2. V_{DD}, V2MON, V3MON, V4MON, or V5MON fall below their minimum voltage sense level.

$\overline{MR}$

The $\overline{MR}$ input is an active low debounced input to which a user can connect a push-button to add manual reset capability or use a signal to pull low. $\overline{MR}$ has an internal pull-up resistor.

V_{DD}

The V_{DD} pin is the IC power supply terminal. The voltage at this pin is compared against an internal factory-programmed voltage trip point, V_{TH1}. $\overline{RST}$ is first asserted low when the device is initially powered and V_{DD} < 1V and then at any time thereafter when V_{DD} falls below V_{TH1}. The device is designed with hysteresis to help prevent chattering due to noise and is immune to brief power-supply transients.

V2MON

The V2MON input is the second preset monitored voltage that causes the $\overline{RST}$ output to go low when the voltage on V2MON falls below V_{TH2}.

V3MON, V4MON, and V5MON

The VxMON inputs provide monitoring and UV compliance of three additional voltages through resistor dividers. A reset is issued on the ISL88031 if the voltage on any VxMON falls below the internal V_{REF} of 0.6V.

Principles of Operation

The ISL88031 device provides those functions needed for monitoring critical voltages, such as power-supply and battery functions in microprocessor systems. It provides such features as Power-On Reset control, Supply Voltage Supervision, and Manual Reset Assertion. The integration of all these features along with competitive reset threshold accuracy and low power consumption, makes the ISL88031 device suitable for a wide

variety of applications needing multi-voltage monitoring. See Figure 1 for the typical application diagram..

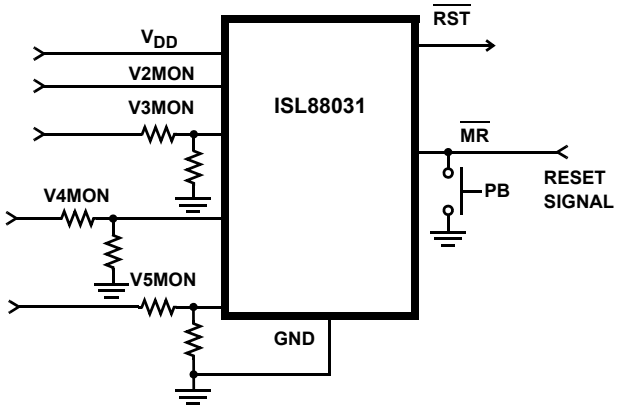

FIGURE 1. TYPICAL APPLICATION DIAGRAM

Low Voltage Monitoring

During normal operation, the ISL88031 monitors the voltage levels of V_{DD}, V2MON, V3MON, V4MON, and V5MON. If the voltage on any of these five inputs falls below their respective voltage trip points, a reset is asserted ($\overline{RST}$ = low) to prevent the microprocessor from operating during a power failure or brownout condition. This reset signal remains low until the voltages exceeds the voltage threshold settings for the reset time delay period t_{POR}.

The ISL88031 allows users to customize the minimum voltage sense level for three of the five monitored voltages. For example, the user can adjust the voltage input trip point (V_{TRIP}) for V3MON, V4MON and V5MON inputs. To do this, connect an external resistor divider network to the VxMON pin in order to set the trip point to some other voltage above 600mV according to Equation 1:

$$V_{TRIP} = 0.6V \times R_1 + R_2/R_2 \quad \text{(EQ. 1)}$$

Power-On Reset (POR)

Applying power to the ISL88031 activates a POR circuit, which makes the reset pin(s) active (i.e. RST goes high while $\overline{RST}$ goes low). These signals provide several benefits:

- It prevents the system microprocessor from starting to operate with insufficient voltage.
- It prevents the processor from operating prior to stabilization of the oscillator.
- It ensures that the monitored device is held out of operation until internal registers are properly loaded.
- It allows time for an FPGA to download its configuration prior to initialization of the circuit.

The reset signal remains active until V_{DD} rises above the minimum voltage sense level for time period t_{POR}. This ensures that the supply voltage has stabilized to sufficient operating levels.

Manual Reset

The manual-reset input ($\overline{MR}$) allows the user to trigger a reset by using a push-button switch or by signaling the input low. The $\overline{MR}$ input is an active low debounced input. Reset is asserted if the $\overline{MR}$ pin is pulled low to less than 100mV for the minimum $\overline{MR}$ pulse width or longer while the push-button is closed. After $\overline{MR}$ is released, the reset output remains asserted low for t_{POR} (200ms) and then is released.

Figures 2 and 3 illustrate the ISL88031's operation. Figure 4 shows the ISL88031EVAL1, the evaluation platform for this family of voltage monitors. Figures 5 and 6 illustrate the $\overline{RST}$ output response times.

The ISL88031EVAL1 and Applications

The ISL88031EVAL1 supports all variants of the ISL88031 devices, enabling evaluation of basic functional operation and common application implementations. Figure 4 illustrates the ISL88031EVAL1 in schematic and photographic forms. The ISL88031EVAL1 has two isolated circuits; the left circuit is populated with the ISL88031IU8HFZ (V_{DD} V_{TH1} = 4.64V, V2MON V_{TH2} = 3.08V). The right circuit is unpopulated for the user to customize to provide a specific voltage monitoring solution with the accompanying loose packed variants.

With adequate bias on the two preset and the three adjustable monitor inputs, the $\overline{RST}$ output will release to pull high indicating that all supplies are compliant for a minimum of t_{POR}. For the ISL88031EVAL1 as shipped, the V_{DD} and V2MON nominal thresholds are as previously noted with the voltage thresholds being monitored by V3MON, V4MON and V5MON being nominally 1.990V, 1.44V and 0.95V respectively.

Special Application Considerations

Using good decoupling practices on bias and other monitoring inputs will prevent transients (i.e. due to switching noises and short duration droops in the supply voltage) from causing unwanted resets.

In unusually noisy environments or situations where unwanted signals may be injected into adjustable VMONx pins, lowering the node impedance and/or positioning a small valued filter capacitor as close to the pin as possible can increase noise immunity.

Although the internal ISL88031 threshold references are guaranteed over the full temp range, accuracy errors due to external component tolerances and distribution losses will occur. High tolerance resistors and layout for extreme accuracy and critical performance must be considered.

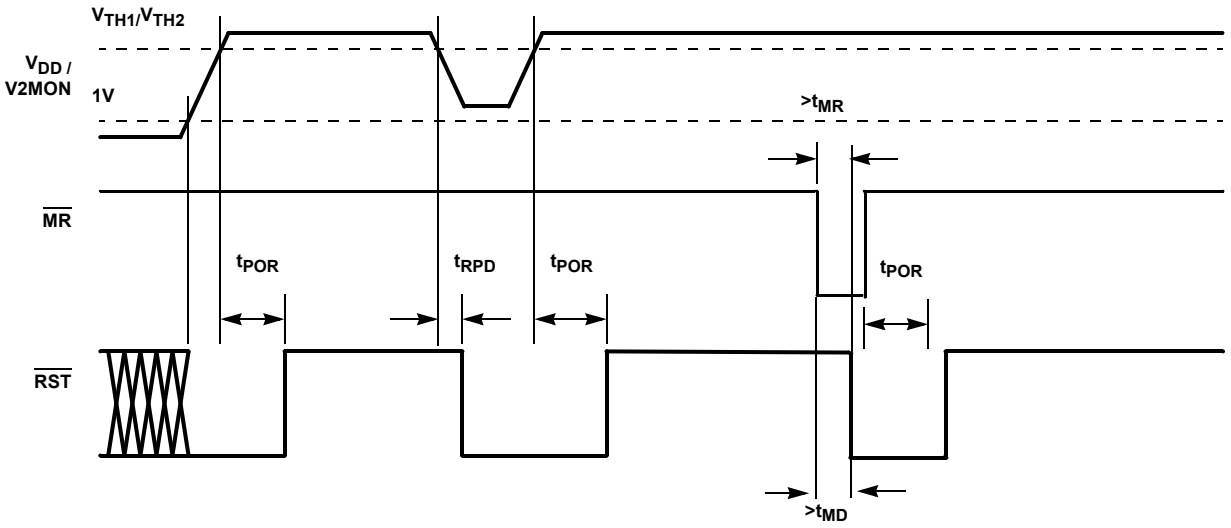

FIGURE 2. POWER SUPPLY MONITORING DIAGRAM

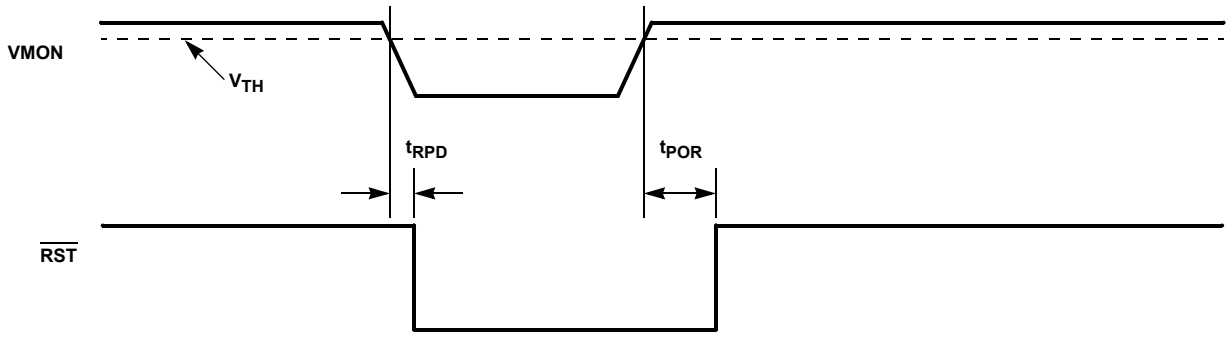

FIGURE 3. VOLTAGE MONITORING DIAGRAM

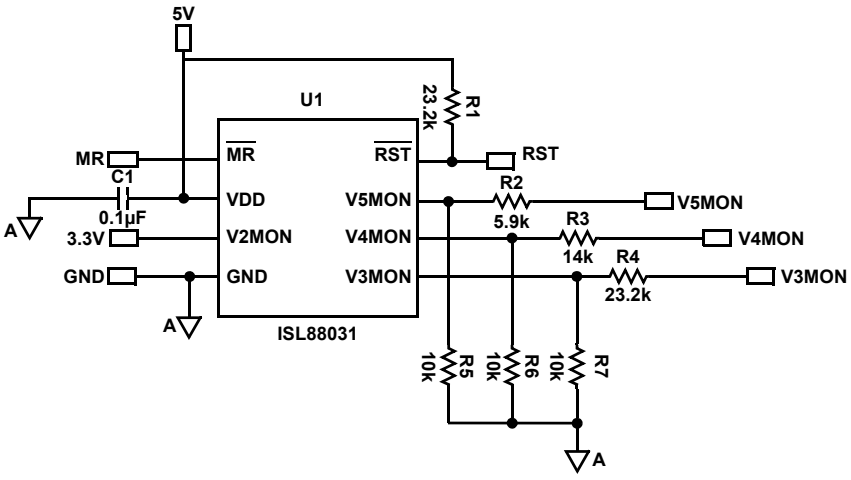

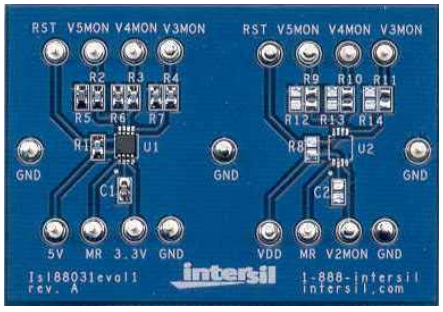

FIGURE 4. ISL88031EVAL1 SCHEMATIC AND PHOTOGRAPH

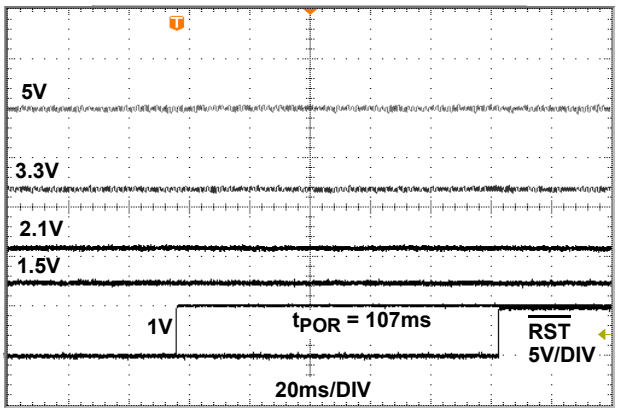

FIGURE 5. ISL88031 t_{POR}

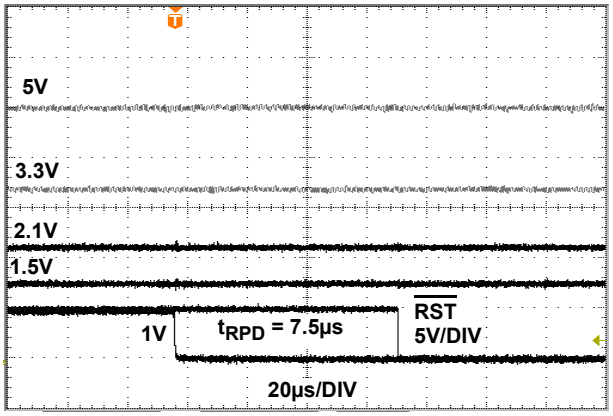

FIGURE 6. ISL88031 t_{RPD}

© Copyright Intersil Americas LLC 2006-2009. All Rights Reserved.
All trademarks and registered trademarks are the property of their respective owners.

For additional products, see www.intersil.com/en/products.html

Intersil products are manufactured, assembled and tested utilizing ISO9001 quality systems as noted in the quality certifications found at www.intersil.com/en/support/qualandreliability.html

Intersil products are sold by description only. Intersil may modify the circuit design and/or specifications of products at any time without notice, provided that such modification does not, in Intersil's sole judgment, affect the form, fit or function of the product. Accordingly, the reader is cautioned to verify that datasheets are current before placing orders. Information furnished by Intersil is believed to be accurate and reliable. However, no responsibility is assumed by Intersil or its subsidiaries for its use; nor for any infringements of patents or other rights of third parties which may result from its use. No license is granted by implication or otherwise under any patent or patent rights of Intersil or its subsidiaries.

For information regarding Intersil Corporation and its products, see www.intersil.com

Mini Small Outline Plastic Packages (MSOP)

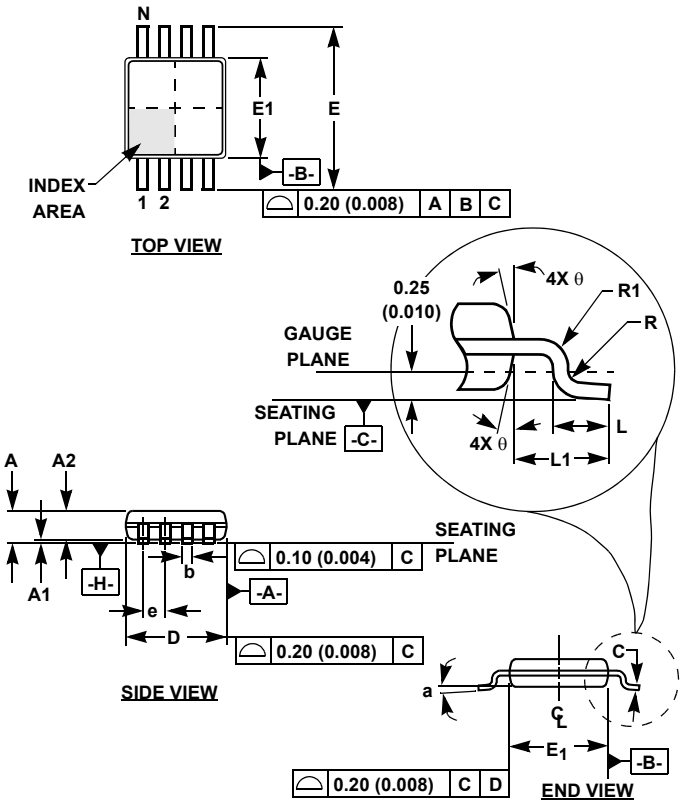

M8.118 (JEDEC MO-187AA)

8 LEAD MINI SMALL OUTLINE PLASTIC PACKAGE

SYMBOL	INCHES		MILLIMETERS		NOTES
	MIN	MAX	MIN	MAX	
A	0.037	0.043	0.94	1.10	-
A1	0.002	0.006	0.05	0.15	-
A2	0.030	0.037	0.75	0.95	-
b	0.010	0.014	0.25	0.36	9
c	0.004	0.008	0.09	0.20	-
D	0.116	0.120	2.95	3.05	3
E1	0.116	0.120	2.95	3.05	4
e	0.026 BSC		0.65 BSC		-
E	0.187	0.199	4.75	5.05	-
L	0.016	0.028	0.40	0.70	6
L1	0.037 REF		0.95 REF		-
N	8		8		7
R	0.003	-	0.07	-	-
R1	0.003	-	0.07	-	-
0	5°	15°	5°	15°	-
α	0°	6°	0°	6°	-

Rev. 2 01/03

NOTES:

1. These package dimensions are within allowable dimensions of JEDEC MO-187BA.
2. Dimensioning and tolerancing per ANSI Y14.5M-1994.
3. Dimension “D” does not include mold flash, protrusions or gate burrs and are measured at Datum Plane. Mold flash, protrusion and gate burrs shall not exceed 0.15mm (0.006 inch) per side.
4. Dimension “E1” does not include interlead flash or protrusions and are measured at Datum Plane. [- H -] Interlead flash and protrusions shall not exceed 0.15mm (0.006 inch) per side.
5. Formed leads shall be planar with respect to one another within 0.10mm (0.004) at seating Plane.
6. “L” is the length of terminal for soldering to a substrate.
7. “N” is the number of terminal positions.
8. Terminal numbers are shown for reference only.
9. Dimension “b” does not include dambar protrusion. Allowable dambar protrusion shall be 0.08mm (0.003 inch) total in excess of “b” dimension at maximum material condition. Minimum space between protrusion and adjacent lead is 0.07mm (0.0027 inch).
10. Datums [-A -] and [- B -] to be determined at Datum plane [- H -].
11. Controlling dimension: MILLIMETER. Converted inch dimensions are for reference only.