Rev	AWO #	Description	Date	Appr
-		RELEASED	11/16/18	
A		ADDED RECOMMENDED MOUNTING HOLES	09/15/20	TW

APPROVED: _____

DATE: _____ TITLE: _____

CUSTOM CABLE ASSEMBLIES ARE NON-CANCELLABLE / NON-RETURNABLE

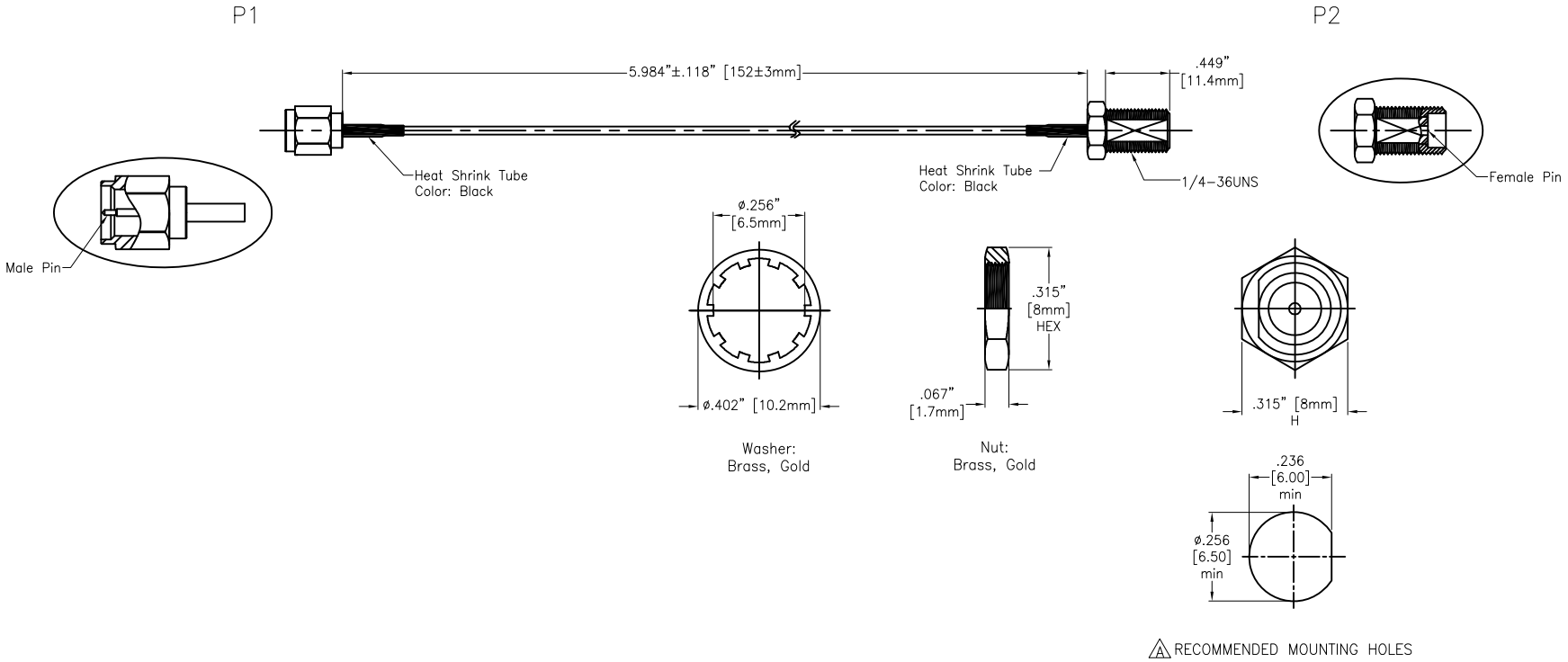

Washer: Brass, Gold

Nut: Brass, Gold

⚠A RECOMMENDED MOUNTING HOLES

SPECIFICATIONS:

Connector:
P1= SMA Straight Plug Connector, Male Pin, Gold plated
P2= SMA Straight Jack Connector, Female Pin, Gold plated

Cable:
RG316

Electrical:
Impedance: 50 ohms
Frequency range: DC-6 GHz

Electrical Test:
All Assemblies must be 100% Tested for Shorts, Open, Continuity, and Physical Appearance.

Environmental:
Lead free, RoHS compliant

RoHS COMPLIANT

UNLESS OTHERWISE SPECIFIED
ALL DIMENSIONS ARE INCHES [MM]
TOLERANCES: EXCEPT AS NOTED

INCHES		HOLES	
.X	± .10	Ø.X	±.10
.XX	± .020	Ø.XX	±.015
.XXX	± .015	Ø.XXX	±.010

APPROVALS		DATE
DRAWN	AY	11/16/18
CHECKED	AC	11/16/18
APPROVED		

ADAM TECH INTERCONNECTS
909 Rahway Avenue,
Union, NJ 07083
Phone: 908-687-5000
Fax: 908-687-5710

TITLE: CUSTOM ASSEMBLY, SMA ST PLUG TO SMA ST JACK, RG316 CABLE

SIZE	PART NO.	REV.
X	CA#DKCA1-152L5-APAJ	A

REF: S00291T | SCALE: NTS | SHEET 1 OF 1