APPROVED: _____

DATE: _____ TITLE: _____

Rev	AWO #	Description	Date	Appr
-		RELEASED	3/24/11	
A		REVISED SOLDERIND TEMP	2/16/12	

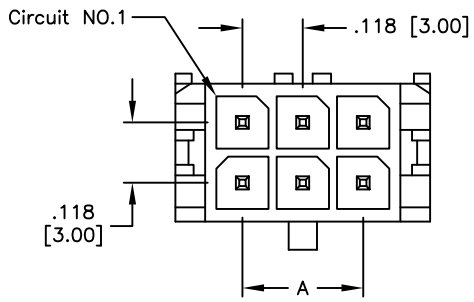

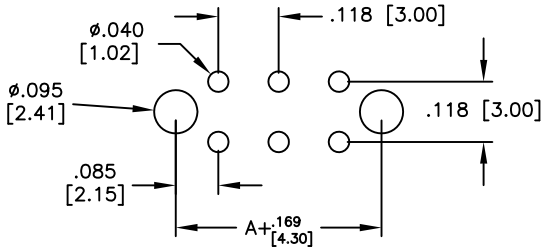

PCB LAYOUT: COMPONENT SIDE
RECOMMENDED PCB THICKNESS: .062"[1.57]

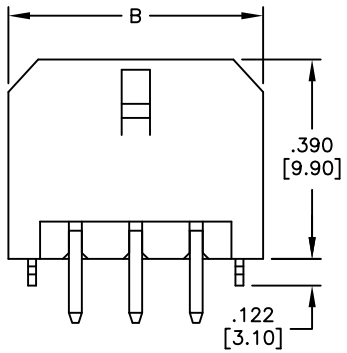

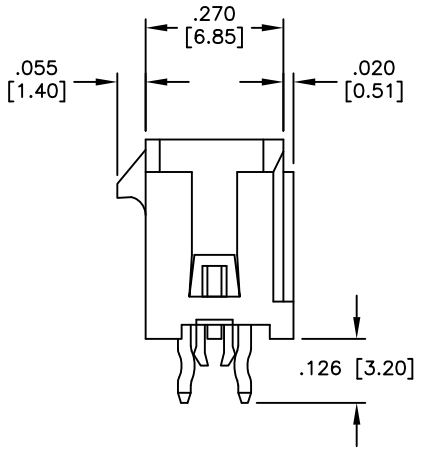

POSITIONS	Dimension	
	A	B
2	NA	.262 [6.65]
4	.118 [3.00]	.380 [9.65]
6	.236 [6.00]	.498 [12.65]
8	.354 [9.00]	.616 [15.65]
10	.472 [12.00]	.734 [18.65]
12	.591 [15.00]	.852 [21.65]
14	.709 [18.00]	.970 [24.65]
16	.827 [21.00]	1.088 [27.65]
18	.945 [24.00]	1.206 [30.65]
20	1.063 [27.00]	1.325 [33.65]
22	1.181 [30.00]	1.443 [36.65]
24	1.299 [33.00]	1.561 [39.65]

SPECIFICATIONS:
Material:
Insulator: Hi-temp thermoplastic, rated UL 94V-0
Insulator color: Black
Contacts: Brass
Plating:
Tin Plate over Nickel underplate overall
Electrical:
Operating voltage: 250 VAC max
Current rating: 20 & 22 Awg: 5 Amps max
24 Awg: 4 Amps max
26 Awg: 3 Amps max
28 Awg: 2 Amps max
30 Awg: 1 Amp max
Contact resistance: 10 mohms max
Dielectric strength: 1500 VAC for 1 minute
Temperature rise: 30°C max.
Environmental:
Lead free, RoHS compliant.

RoHS COMPLIANT

UNLESS OTHERWISE SPECIFIED
ALL DIMENSIONS ARE INCHES [MM]
TOLERANCES: EXCEPT AS NOTED

INCHES		HOLES	
.X	± .10	Ø.X	±.10
.XX	± .020	Ø.XX	±.015
.XXX	± .015	Ø.XXX	±.010

APPROVALS		DATE
DRAWN	DY	3/24/11
CHECKED		
APPROVED		

ADAM TECH
909 Rahway Avenue, Union, NJ 07083
Phone: 908-687-5000 Fax: 908-687-5710

TITLE: .118" [3.00mm] MICRO FIT HEADER DUAL ROW VERTICAL

SIZE	PART NO.	REV.
X	DML-XX-A-V-T-A-BL	A

REF: S00123T | SCALE: NTS | SHEET 1 OF 1