Murata Power Solutions

HPQ-12/25-D48 Series

Isolated 300-Watt Quarter Brick DC-DC Converters

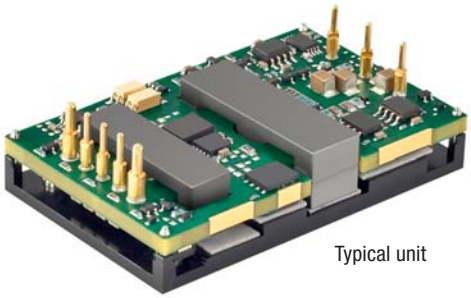

Typical unit

Output (V)	Current (A)	Nominal Input (V)
12	25	48

FEATURES

- 12 Volts DC fixed output up to 25 Amps
- Industry standard quarter brick 2.3″ x 1.45″ x 0.49″ open frame package
- Wide range 36 to 75 Vdc input voltages with 2250 Volt Basic isolation
- Double lead-free assembly and attachment for RoHS standards
- Up to 300 Watts total output power
- High efficiency (94.5%) synchronous rectifier topology
- Stable no-load operation with no required external components
- Operating temperature range -40 to +85° C. with no heat sink required
- Certified to UL/EN 60950-1, CSA-C22.2 No. 60950-1, 2nd edition safety approvals
- Extensive self-protection, current limiting and shut down features
- "X" optional version omits trim and sense pins

PRODUCT OVERVIEW

The HPQ-12/25-D48 series offers high output current (up to 25 Amps) in an industry standard "quarter brick" package requiring no heat sink for most applications. The HPQ-12/25-D48 series delivers fixed 12 Vdc output at 300 Watts for printed circuit board mounting. Wide range inputs on the 2.3″ x 1.45″ x 0.49″ converter are 36 to 75 Volts DC (48 Volts nominal), ideal for datacom and telecom systems. The fixed output voltage is regulated to within ±0.25%.

Advanced automated surface mount assembly and planar magnetics deliver galvanic isolation rated at 2250 Vdc for basic insulation. To power digital systems, the outputs offer fast settling to current steps and tolerance of higher capacitive loads. Excellent ripple and noise specifications assure compatibility to CPU's, ASIC's, programmable logic and FPGA's. No minimum load is required. For systems needing controlled startup/shutdown, an external remote On/Off control may use either positive or negative logic. Remote Sense inputs compensate for resistive line drops at high currents.

A wealth of self-protection features avoid problems with both the converter and external circuits. These include input undervoltage lockout and overtemperature shutdown using an on-board temperature sensor. Overcurrent protection using the "hiccup" autorestart technique provides indefinite short-circuit protection. Additional safety features include output overvoltage protection and reverse conduction elimination. The synchronous rectifier topology offers high efficiency for minimal heat buildup and "no heat sink" operation. The HPQ-12/25-D48 series is certified to full safety standards UL/EN/IEC/CSA 60950-1, 2nd edition and RFI/EMI conducted/radiated emission compliance to EN55022, CISPR22 with external filter.

APPLICATIONS

- Embedded systems, datacom and telecom installations
- Disk farms, data centers and cellular repeater sites
- Remote sensor systems, dedicated controllers
- Instrumentation systems, R&D platforms, automated test fixtures
- Data concentrators, voice forwarding and speech processing systems

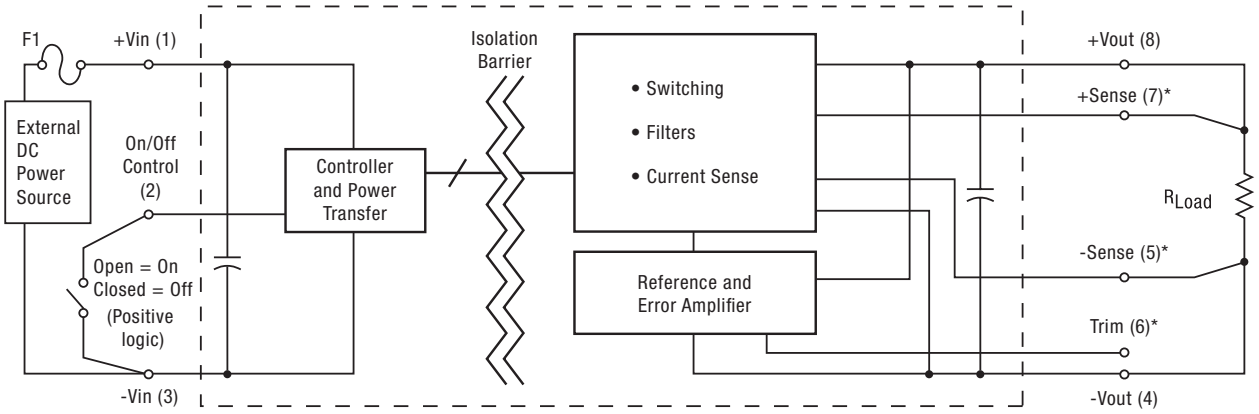

Figure 1. Connection Diagram

Typical topology is shown. Murata Power Solutions recommends an external fuse.

*** "X" option omits trim and sense pins.**

RoHS COMPLIANT

For full details go to www.murata-ps.com/rohs

c UL us

PEFORMANCE SPECIFICATION SUMMARY AND ORDERING GUIDE ①

Root Model ①	Output							Input				Efficiency		Package (C59)	
	VOUT (Volts)	IOUT (Amps, max.)	Power (Watts)	R/N (mV pk-pk) Typ.	R/N (mV pk-pk) Max.	Regulation (Max.) ② Line	Regulation (Max.) ② Load	VIN Nom. (Volts)	Range (Volts)	IIN no load (mA)	IIN full load (Amps)	Min. ③	Typ.	Dimensions (inches)	Dimensions (mm)
HPQ-12/25-D48	12	25	300	80	120	±0.125%	±0.25%	48	36-75	150	6.61	94%	95%	2.3x1.45x0.49 max.	58.4x36.8x12.45

① Please refer to the part number structure for additional ordering information and options.
② All specifications are at nominal line voltage and full load, +25 deg.C. unless otherwise noted. See detailed specifications. Output capacitors are 1 µF ceramic in parallel with 10 µF electrolytic with no input caps.These caps are necessary for our test equipment and may not be needed for your application.
③ Ta=25C, Vin=48V, Full load condition.

To Be Discontinued *

NOTE: The following products are **To Be Discontinued**.

HPQ-12/25-D48PB-C HPQ-12/25-D48PBX-C HPQ-12/25-D48PH-C
HPQ-12/25-D48PBH-C HPQ-12/25-D48P-C HPQ-12/25-D48PX-C

PART NUMBER STRUCTURE

HPQ - 12 / 25 - D48 N B H X Lx - C

Family Series:
High Power
Quarter Brick

Nominal Output Voltage

Maximum Rated Output
Current in Amps

Input Voltage Range:
D48 = 36-75 Volts (48V nominal)

On/Off Control Logic
N = Negative logic, standard
P = Positive logic, optional

To Be Discontinued *

Baseplate (optional)
Blank = No baseplate, standard
B = Baseplate installed, optional

Conformal coating (optional)
Blank = no coating, standard
H = Coating added, optional

Trim & Sense Pins Option
Blank = Trim and Sense installed, standard
X = Trim and Sense removed
Z = Sense removed (Trim included)

Pin length option
Blank = standard pin length 0.180 in. (4.6 mm)
L1 = 0.110 in. (2.79 mm)*
L2 = 0.145 in. (3.68 mm)*

RoHS Hazardous Materials compliance
C = RoHS-6 (does not claim EU RoHS exemption 7b–lead in solder), standard
Y = RoHS-5 (with lead), optional, special quantity order

***Special quantity order is required; samples available with standard pin length only.**

Note:
Some model number combinations may not be available. See website or contact your local Murata sales representative.

Complete Model Number Example: **HPQ-12/25-D48NBHXL1-C**

Negative On/Off logic, baseplate installed, conformally coated, trim and sense pins removed, 0.110˝ pin length, RoHS-6 compliance

*** Last Time Buy date is 3/31/2019. Please click here to view the Discontinuance Notification.**

FUNCTIONAL SPECIFICATIONS

ABSOLUTE MAXIMUM RATINGS	Conditions ①	Minimum	Typical/Nominal	Maximum	Units
Input Voltage, Continuous	Full power operation	36		80	Vdc
Input Voltage, Transient	Operating or non-operating, 100 mS max. duration			100	Vdc
Isolation Voltage	Input to output tested 100 mS			2250	Vdc
Input Reverse Polarity	None, install external fuse		None		Vdc
On/Off Remote Control	Power on or off, referred to -Vin	0		13.5	Vdc
Output Power		0		300	W
Output Current	Current-limited, no damage, short-circuit protected	0		25	A
Storage Temperature Range	Vin = Zero (no power)	-55		125	°C
Absolute maximums are stress ratings. Exposure of devices to greater than any of these conditions may adversely affect long-term reliability. Proper operation under conditions other than those listed in the Performance/Functional Specifications Table is not implied or recommended.					
INPUT	**Conditions ① ③**				
Operating voltage range		36	48	75	Vdc
Recommended External Fuse	Fast blow		20		A
Start-up threshold	Rising input voltage	33	34	35	Vdc
Undervoltage shutdown	Falling input voltage	31	32	34	Vdc
Overvoltage protection	Rising input voltage		None		Vdc
Reverse Polarity Protection	None, install external fuse		None		Vdc
Internal Filter Type			Pi-type		
Input current					
Full Load Conditions	Vin = nominal		6.61	6.82	A
Low Line	Vin = minimum		8.82	9.1	A
Inrush Transient	Vin = 48V.		0.3		A2-Sec.
Output in Short Circuit			50	100	mA
No Load	Iout = minimum, unit=ON		150	250	mA
Standby Mode (Off, UV, OT)			5	10	mA
Reflected (back) ripple current ②	Measured at input with specified filter		50	70	mA, RMS
GENERAL and SAFETY					
Efficiency	Vin=48V, full load	94	95		%
Isolation					
Isolation Voltage, input to output	No baseplate	2250			Vdc
Isolation Voltage, input to output	With baseplate	2250			Vdc
Isolation Voltage, input to baseplate	With baseplate	1500			Vdc
Isolation Voltage, output to baseplate	With baseplate	1500			Vdc
Insulation Safety Rating			basic		
Isolation Resistance		10			MΩ
Isolation Capacitance			1000		pF
Safety	Certified to UL-60950-1, CSA-C22.2 No.60950-1, IEC/EN60950-1, 2nd edition		Yes		
Calculated MTBF	Per MIL-HDBK-217F, ground benign, Tambient=+TBD°C		TBD		Hours x 10^3
Calculated MTBF	Per Telcordia SR-332, issue 1, class 3, ground fixed, Tcase=+25°C		1500		Hours x 10^3
DYNAMIC CHARACTERISTICS					
Fixed Switching Frequency			260		KHz
Startup Time ⑨	Power On, to Vout regulation band, 100% resistive load			25	mS
Startup Time	Remote ON to Vout Regulated			25	mS
Dynamic Load Response	50-75-50% load step to 1% error band		550	825	µSec
Dynamic Load di/dt				0.1	A / µSec
Dynamic Load Peak Deviation	same as above		±500	±750	mV
FEATURES and OPTIONS					
Remote On/Off Control ④					
"N" suffix:					
Negative Logic, ON state	ON = pin grounded or external voltage	-0.1		0.8	Vdc
Negative Logic, OFF state	OFF = pin open or external voltage	3.5		13.5	Vdc
Control Current	open collector/drain			2	mA

FUNCTIONAL SPECIFICATIONS (CONT.)

FEATURES and OPTIONS (cont.)	Conditions ①	Minimum	Typical/Nominal	Maximum	Units
Remote On/Off Control (cont.) ④					
"P" suffix:					
Positive Logic, ON state	ON = pin open or external voltage	3.5		13.5	V
Positive Logic, OFF state	OFF = ground pin or external voltage	0		0.8	V
Control Current	open collector/drain			2	mA
Remote Sense Compliance ⑦	Vsense=Vout - Vload, Sense pins connected externally to respective Vout's			0.5	V
Base Plate	"B" suffix		optional		
OUTPUT					
Total Output Power		0.0	300	306	W
Voltage					
Setting Accuracy	At 50% load, no trim	11.76	12	12.24	Vdc
Output Voltage Range ⑦	User-adjustable	-10		+10	% of Vnom.
Overvoltage Protection	Via magnetic feedback		14.4	18	V
Current					
Output Current Range		0.0		25.0	A
Minimum Load			No minimum load		
Current Limit Inception	98% of Vnom., after warmup	28.5	32	42	A
Short Circuit					
Short Circuit Current	Hiccup technique, autorecovery within 1.25% of Vout		0.8	1.0	A
Short Circuit Duration (remove short for recovery)	Output shorted to ground, no damage		Continuous		
Short circuit protection method	Hiccup current limiting		Non-latching		
Regulation ⑤					
Line Regulation	Vin=min. to max., Vout=nom., full load			±0.125	% of Vout
Load Regulation	Iout=min. to max., Vin=nom.			±0.25	% of Vout
Ripple and Noise ⑥	Vin=48V, full load, 5 Hz- 20 MHz BW, Cout=1µF MLCC paralleled with 10µF		80	100	mV pk-pk
Temperature Coefficient	At all outputs		0.02		% of Vout./°C
Maximum Capacitive Loading	Full resistive load, low ESR	0		4,700	µF
MECHANICAL (Through Hole Models)					
Outline Dimensions (no baseplate)	C59 case		2.3x1.45x0.49 max.		Inches
(Please refer to outline drawing)	LxWxH		58.4x36.8x12.45		mm
Outline Dimensions (with baseplate)			2.3x1.45x0.5		Inches
			58.4x36.8x12.7		mm
Weight	No baseplate		1.51		Ounces
	No baseplate		47		Grams
	With baseplate		2.4		Ounces
	With baseplate		68		Grams
Through Hole Pin Diameter			0.04 & 0.062		Inches
			1.016 & 1.575		mm
Through Hole Pin Material			Copper alloy		
TH Pin Plating Metal and Thickness	Nickel subplate		100-299		µ-inches
	Gold overplate		3.9-19.6		µ-inches
Baseplate Material			Aluminum		
ENVIRONMENTAL					
Operating Ambient Temperature Range	See derating curves	-40		85	°C
Operating Case Temperature	No derating required	-40		110	°C
Storage Temperature	Vin = Zero (no power)	-55		125	°C
Thermal Protection/Shutdown	Measured at hotspot	105	110	125	°C
Electromagnetic Interference	External filter is required				
Conducted, EN55022/CISPR22			B		Class
Radiated, EN55022/CISPR22			B		Class
Relative humidity, non-condensing	To +85°C	10		90	%RH
Altitude	must derate -1%/1000 feet	-500		10,000	feet
		-152		3048	meters
Acceleration		50			g
Shock	Halfsine wave, 3 axes	1			g
Sinusoidal Vibration	GR-63-Core, Section 5.4.2				
RoHS rating			RoHS-6		

Notes

① Unless otherwise noted, all specifications apply over the input voltage range, full temperature range, nominal output voltage and full output load. General conditions are near sea level altitude, no base plate installed and natural convection airflow unless otherwise specified. All models are tested and specified with external parallel 1 µF and 10 µF multi-layer ceramic output capacitors. No external input capacitor is used (see Application Notes). All capacitors are low-ESR types wired close to the converter. These capacitors are necessary for our test equipment and may not be needed in the user's application.

② Input (back) ripple current is tested and specified over 5 Hz to 20 MHz bandwidth. Input filtering is Cin = 33 µF, Cbus = 220µF and Lbus = 4.7 µH.

③ All models are stable and regulate to specification under no load.

④ The Remote On/Off Control is referred to -Vin.

⑤ Regulation specifications describe the output voltage changes as the line voltage or load current is varied from its nominal or midpoint value to either extreme. The load step is ±25% of full load current.

⑥ Output Ripple and Noise is measured with Cout = 1µF MLCC paralleled with 10µF tantalum, 20 MHz oscilloscope bandwidth and full resistive load.

⑦ The Sense and Trim pins are removed for the "X" model option.

⑧ NOTICE—Please use only this customer data sheet as product documentation when laying out your printed circuit boards and applying this product into your application. Do NOT use other materials as official documentation such as advertisements, product announcements, or website graphics.
We strive to have all technical data in this customer data sheet highly accurate and complete. This customer data sheet is revision-controlled and dated. The latest customer data sheet revision is normally on our website (www.murata-ps.com) for products which are fully released to Manufacturing. Please be especially careful using any data sheets labeled "Preliminary" since data may change without notice. The pinout (Pxx) and case (Cxx) designations (typically P65 or C59) refer to a generic family of closely related information. It may not be a single pinout or unique case outline. Please be aware of small details (such as Sense pins, Power Good pins, etc.) or slightly different dimensions (baseplates, heat sinks, etc.) which may affect your application and PC board layouts. Study the Mechanical Outline drawings, Input/Output Connection table and all footnotes very carefully. Please contact Murata Power Solutions if you have any questions.

⑨ HPQ restart delay (see technical notes, page 12).

TYPICAL PERFORMANCE DATA

Efficiency vs. Output Current @ +25°C

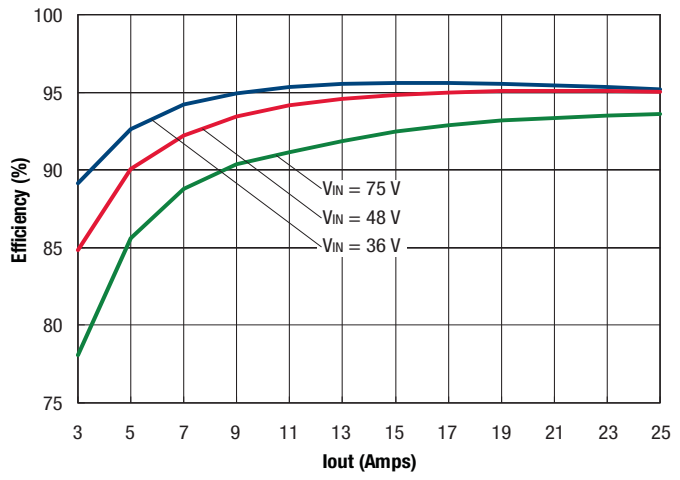

Efficiency vs. Output Current @ -40°C

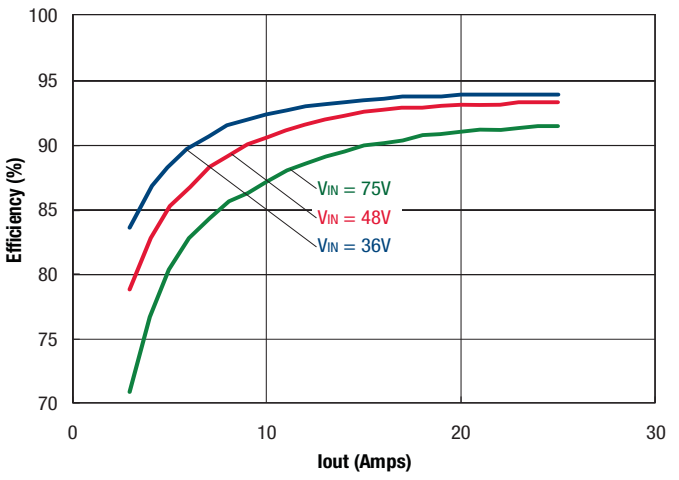

Efficiency vs. Output Current @ +60°C

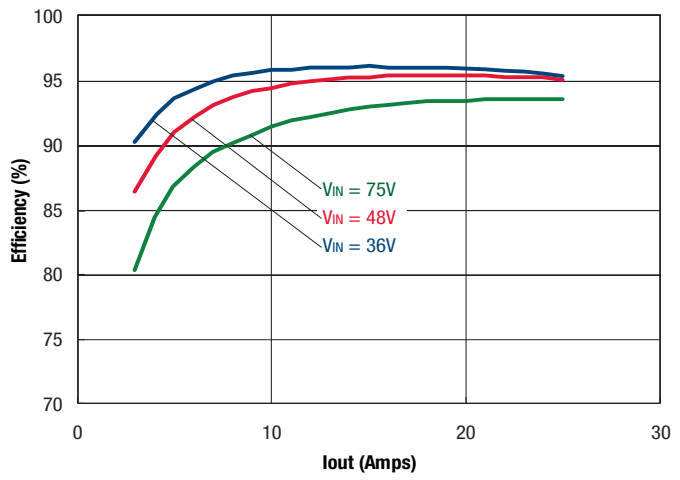

Output Voltage vs Load Current at -40°C.

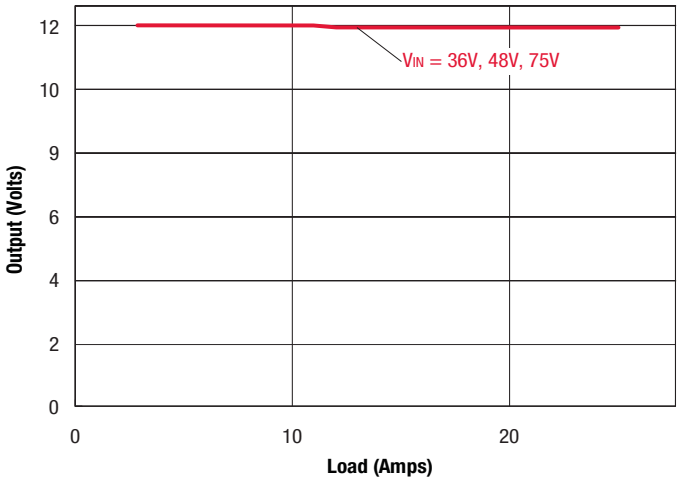

TYPICAL PERFORMANCE DATA

Output Voltage vs Load Current at +25°C.

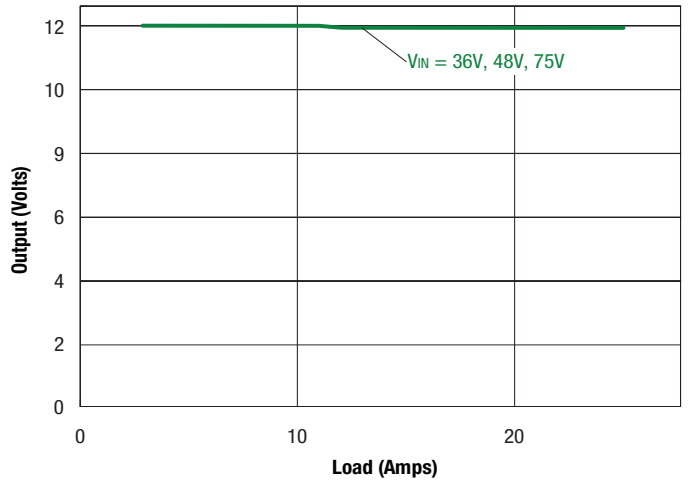

Output Voltage vs Load Current at +60°C.

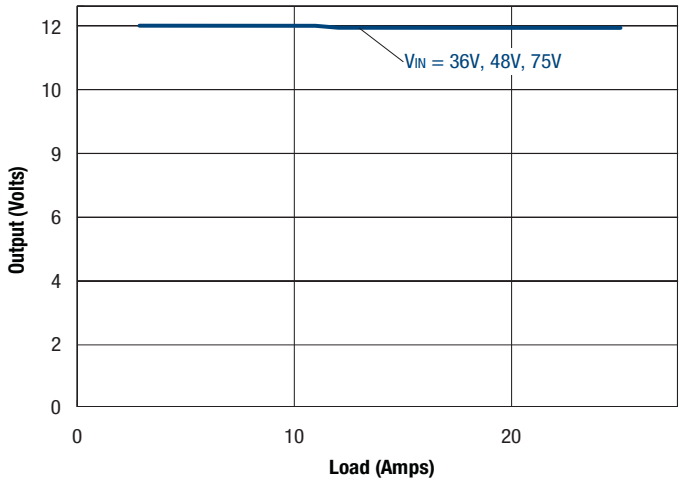

Maximum Current Temperature Derating vs. Airflow (Vin=Vnom., airflow direction is from Vin to Vout, no baseplate, at sea level)

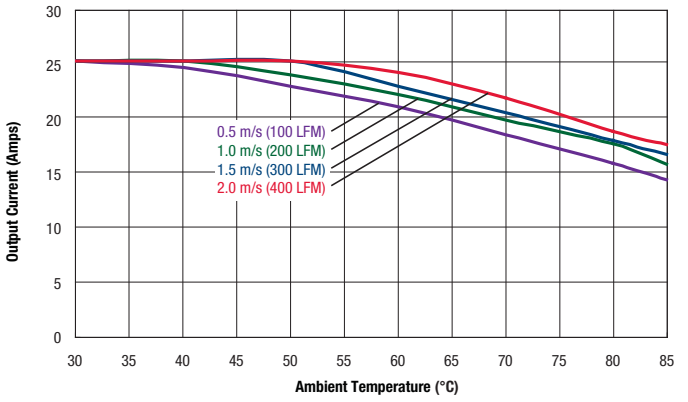

Maximum Current Temperature Derating vs. Airflow (Vin=Vnom., airflow direction is from -Vin to +Vin, with baseplate, at sea level)

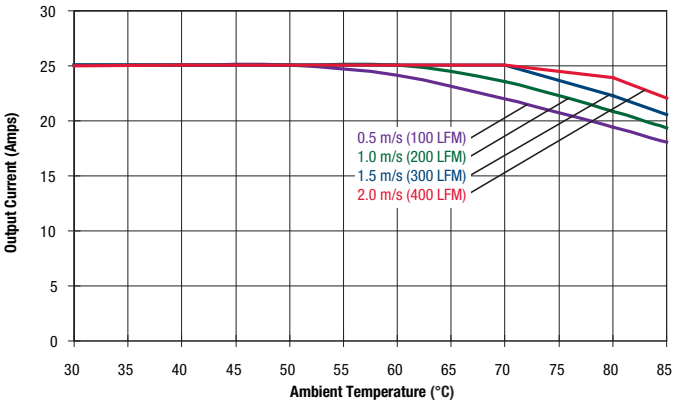

TYPICAL PERFORMANCE DATA

Power On Startup Delay Output
(Vin = 0 to 48V, Iout = 25A, Cload = 0, Ta = +25°C)

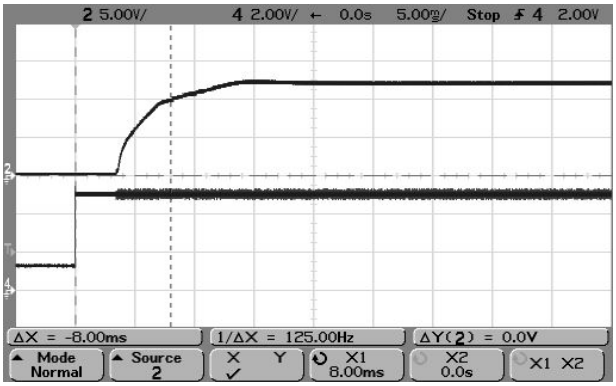

Power On Startup Delay Output
(Vin = 0 to 48V, Iout = 0A, Cload = 0, Ta = +25°C)

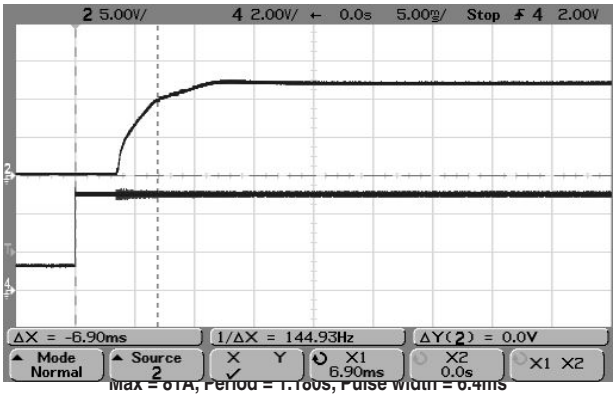

Max = 81A, Period = 1.180s, Pulse Width = 0.4ms

Output Short Circuit Hiccup
(Vin = Nom., Iout = Imax, Cload = 0, Ta = +25°C)

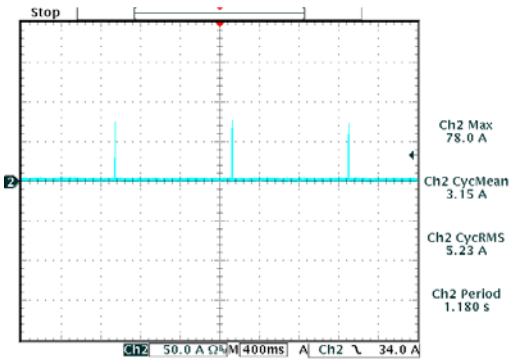

Step Load Transient Response (Vin = 48V, Cload = 1µF ceramic and 10µF tantalum, Iout = 50-75-50% Imax, Slew = 0.1A/µSec., Ta = +25°C)

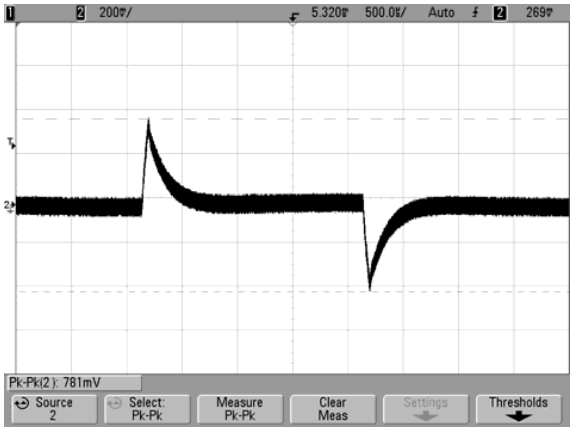

TYPICAL PERFORMANCE DATA

Output Ripple and Noise (Vin=36V, Iout=0A, Cload=0, Ta=+25˚C., ScopeBW=20MHz)

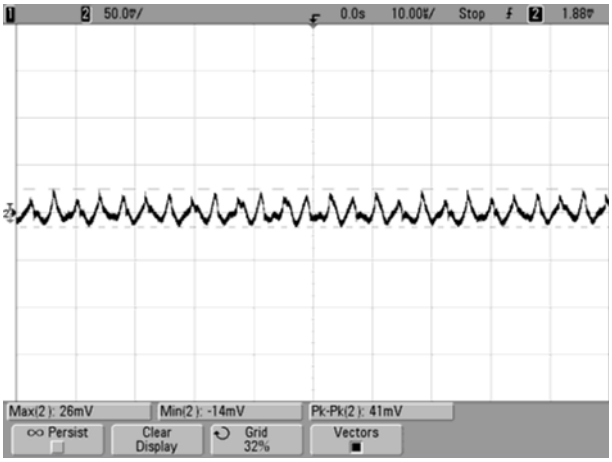

Output Ripple and Noise (Vin=36V, Iout=25A, Cload=0, Ta=+25˚C., ScopeBW=20MHz)

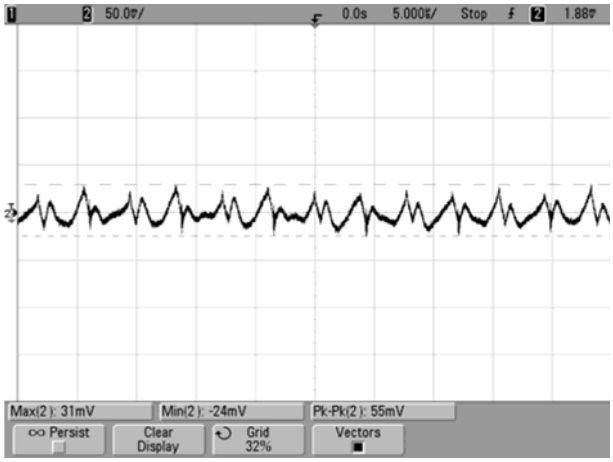

Output Ripple and Noise (Vin=48V, Iout=0A, Cload=0, Ta=+25˚C., ScopeBW=20MHz)

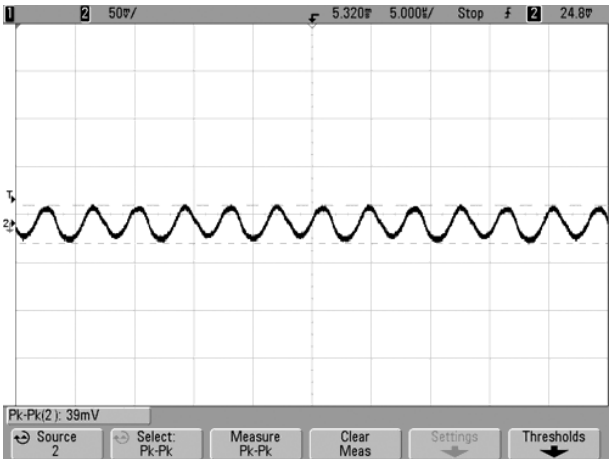

Output Ripple and Noise (Vin=48V, Iout=25A, Cload=0, Ta=+25˚C., ScopeBW=20MHz)

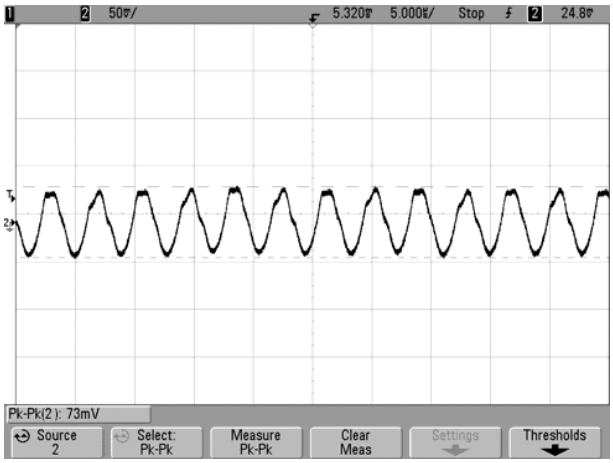

Output Ripple and Noise (Vin=75V, Iout=0A, Cload=0, Ta=+25˚C., ScopeBW=20MHz)

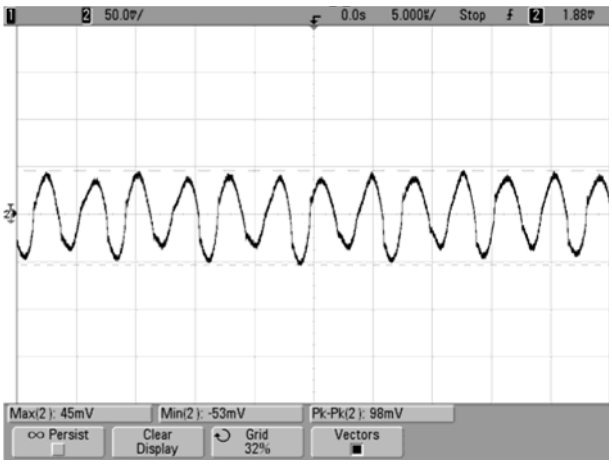

Output Ripple and Noise (Vin=75V, Iout=25A, Cload=0, Ta=+25˚C., ScopeBW=20MHz)

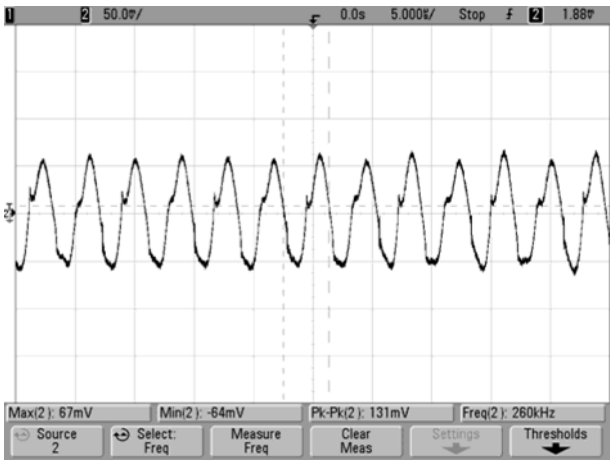

TYPICAL PERFORMANCE DATA

HPQ Restart Delay (See Specification Note 9)

When the HPQ undergoes shutdown through loss or cycling of the input power, a 555 timer enable block circuit is triggered to provide a restart delay to assure systematic restart of the converter. The delay time is a function both of the recovery time of the input voltage and the 555 reset time.

Thus, there are two distinct scenarios for the restart delay, which are detailed below.

Scenario I: Vin recovers quickly.

When the input voltage recovers quickly, the Vcc for the 555 timer remains active to lockout the output for the programmed delay time. The delay time in this scenario is then equal to the 555 hiccup recovery time. This is internally set to a nominal value of 3s. This is illustrated in the scope shot below:

Vin (20V per division), Vout (5V per division) at 500ms (1/2 S per division).

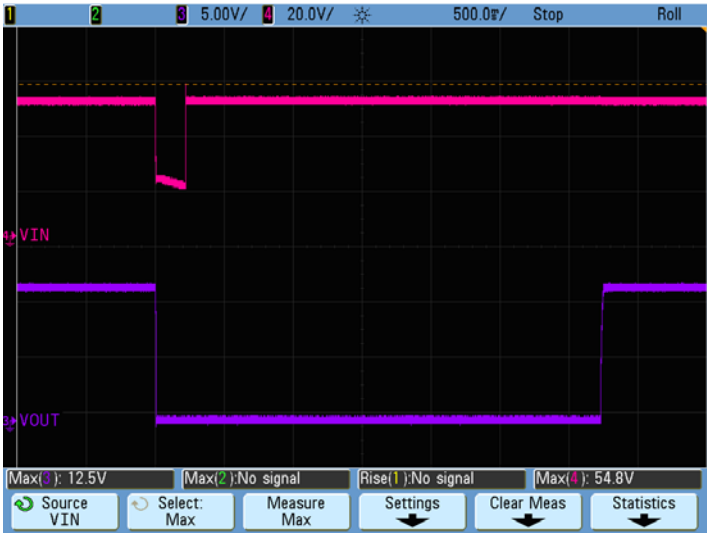

Scenario II: Vin recovers after more than 2.5s (restart delay time less than 15ms)

When the input voltage is absent greater than 2.5s, the energy for the Vcc to the 555 timer enable block will be exhausted. Since this is a sufficient period to guarantee systematic restart of the converter, the output will start after just a 15ms delay from the application of input power. This scenario is illustrated in the scope shot below.

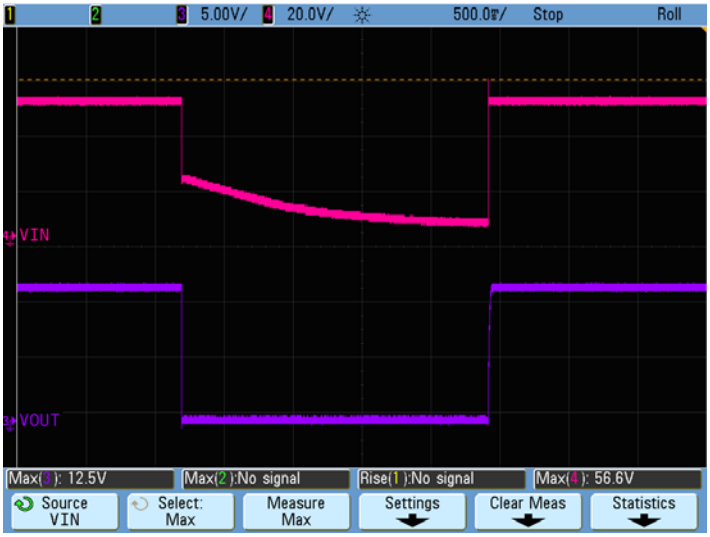

MECHANICAL SPECIFICATIONS (THROUGH-HOLE MOUNT)—DOSA COMPLIANT

NO BASEPLATE

TOP VIEW

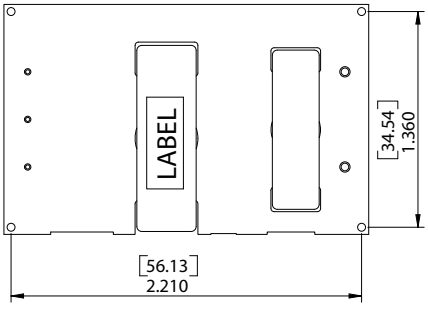

WITH BASEPLATE

TOP VIEW

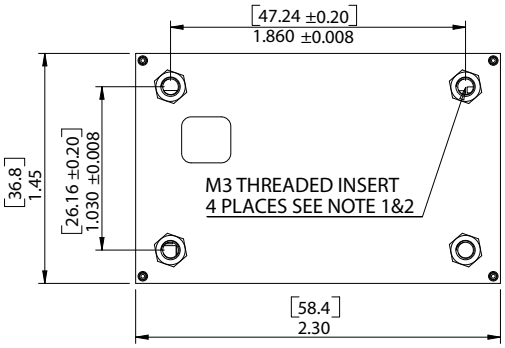

Case C59

SIDE VIEW

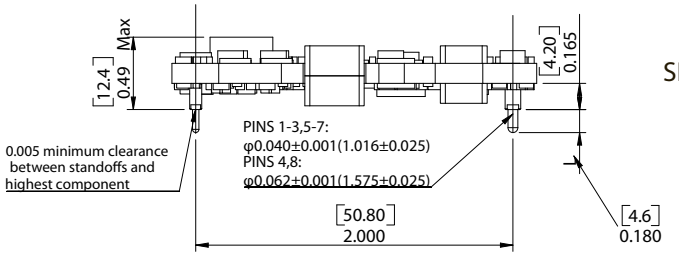

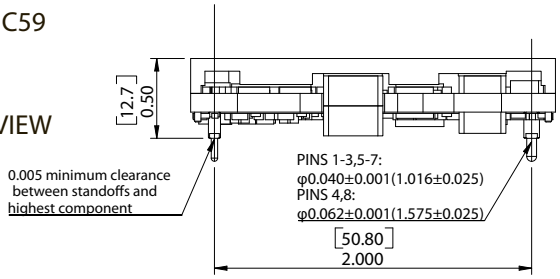

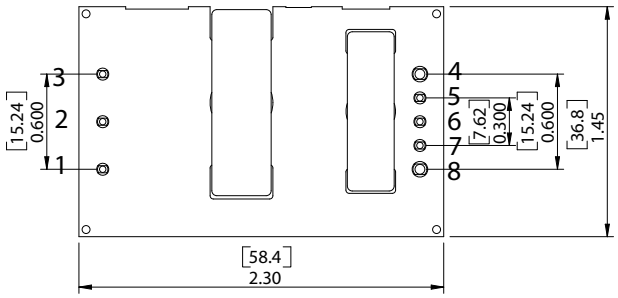

BOTTOM PIN SIDE VIEW

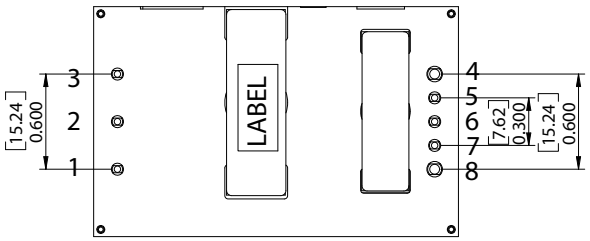

BOTTOM PIN SIDE VIEW

① M3 bolts must not exceed 0.118″ (3mm) depth below the baseplate surface.
② Applied screw torque must not exceed 5.3 in-lb. (0.6 N-m).

The standard 0.180″ pin length is shown. Please refer to the part number structure for alternate pin lengths.

Dimensions are in inches (mm shown for ref. only).

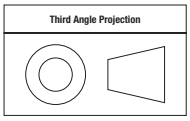

Tolerances (unless otherwise specified):
.XX ± 0.02 (0.5)
.XXX ± 0.010 (0.25)
Angles ± 2°

Components are shown for reference only.

DOSA-Compatible I/O Connections (pin side view)

Pin	Function P32	Pin	Function P32
1	Pos. Vin	5	Neg. Sense*
2	Remote On/Off Control	6	Trim*
3	Neg. Vin	7	Pos. Sense*
4	Neg. Output	8	Pos. Output

* The Sense and Trim pins are removed for the "X" model option.

STANDARD PACKAGING

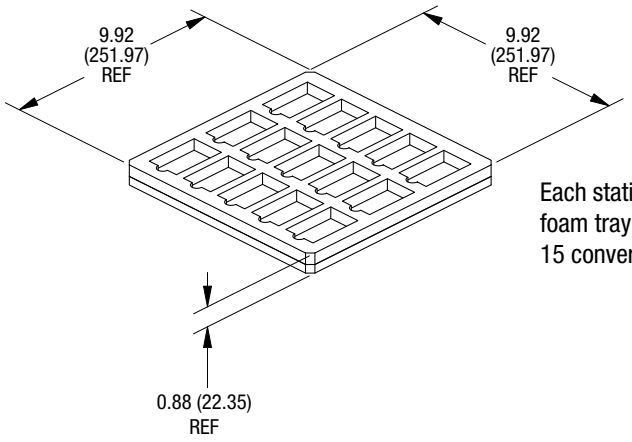

Each static dissipative polyethylene foam tray accommodates 15 converters in a 3 x 5 array.

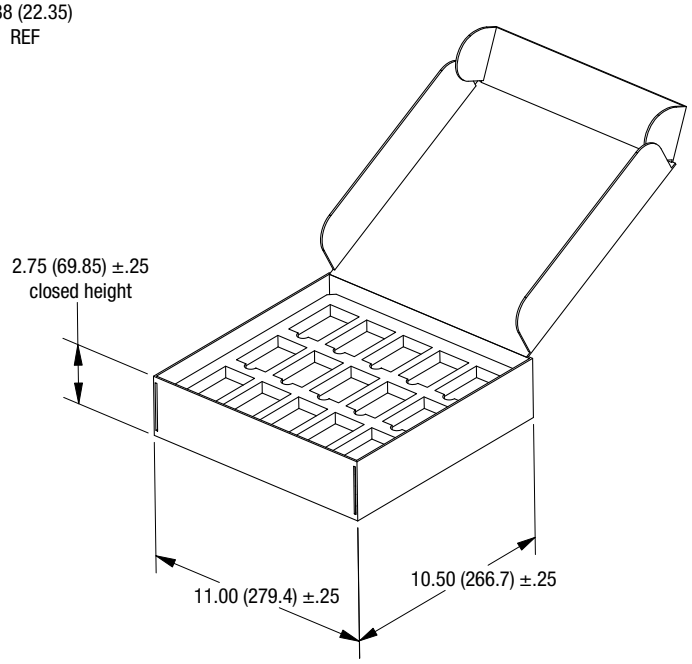

Carton accommodates two (2) trays yielding 30 converters per carton

Dimensions are in inches (mm) shown for ref. only.

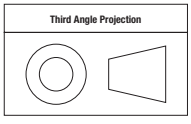

Tolerances (unless otherwise specified):
.XX ± 0.02 (0.5)
.XXX ± 0.010 (0.25)
Angles ± 2˚

TECHNICAL NOTES

Input Fusing

Certain applications and/or safety agencies may require fuses at the inputs of power conversion components. Fuses should also be used when there is the possibility of sustained input voltage reversal which is not current-limited. For greatest safety, we recommend a fast blow fuse installed in the ungrounded input supply line.

The installer must observe all relevant safety standards and regulations. For safety agency approvals, install the converter in compliance with the end-user safety standard.

Input Reverse-Polarity Protection

If the input voltage polarity is reversed, body diodes of mosfets will become forward biased and likely draw excessive current from the power source. If this source is not current-limited or the circuit appropriately fused, it could cause permanent damage to the converter.

Input Under-Voltage Shutdown and Start-Up Threshold

Under normal start-up conditions, converters will not begin to regulate properly until the rising input voltage exceeds and remains at the Start-Up Threshold Voltage (see Specifications). Once operating, converters will not turn off until the input voltage drops below the Under-Voltage Shutdown Limit. Subsequent restart will not occur until the input voltage rises again above the Start-Up Threshold. This built-in hysteresis prevents any unstable on/off operation at a single input voltage.

Users should be aware however of input sources near the Under-Voltage Shutdown whose voltage decays as input current is consumed (such as capacitor inputs), the converter shuts off and then restarts as the external capacitor recharges. Such situations could oscillate. To prevent this, make sure the operating input voltage is well above the UV Shutdown voltage AT ALL TIMES.

Start-Up Delay

Assuming that the output current is set at the rated maximum, the Vin to Vout Start-Up Delay (see Specifications) is the time interval between the point when the rising input voltage crosses the Start-Up Threshold and the fully loaded regulated output voltage enters and remains within its specified regulation band. Actual measured times will vary with input source impedance, external input capacitance, input voltage slew rate and final value of the input voltage as it appears at the converter.

These converters include a soft start circuit to moderate the duty cycle of the PWM controller at power up, thereby limiting the input inrush current.

The On/Off Remote Control interval from inception to V_{OUT} regulated assumes that the converter already has its input voltage stabilized above the Start-Up Threshold before the On command. The interval is measured from the On command until the output enters 90% of its specified regulation band. The specification assumes that the output is fully loaded at maximum rated current.

Input Source Impedance

These converters will operate to specifications without external components, assuming that the source voltage has very low impedance and reasonable input voltage regulation. Since real-world voltage sources have finite impedance, performance is improved by adding external filter components. Sometimes only a small ceramic capacitor is sufficient. Since it is difficult to totally characterize all applications, some experimentation may be needed. Note that external input capacitors must accept high speed switching currents.

Because of the switching nature of DC/DC converters, the input of these converters must be driven from a source with both low AC impedance and adequate DC input regulation. Performance will degrade with increasing input inductance. Excessive input inductance may inhibit operation. The DC input regulation specifies that the input voltage, once operating, must never degrade below the Shut-Down Threshold under all load conditions. Be sure to use adequate trace sizes and mount components close to the converter.

I/O Filtering, Input Ripple Current and Output Noise

All models in this converter series are tested and specified for input reflected ripple current and output noise using designated external input/output components, circuits and layout as shown in the figures below. External input capacitors (C_{IN} in the figure) serve primarily as energy storage elements, minimizing line voltage variations caused by transient IR drops in the input conductors. Users should select input capacitors for bulk capacitance (at appropriate frequencies), low ESR and high RMS ripple current ratings. In the figure below, the C_{BUS} and L_{BUS} components simulate a typical DC voltage bus. Your specific system configuration may require additional considerations. Please note that the values of C_{IN}, L_{BUS} and C_{BUS} may vary according to the specific converter model.

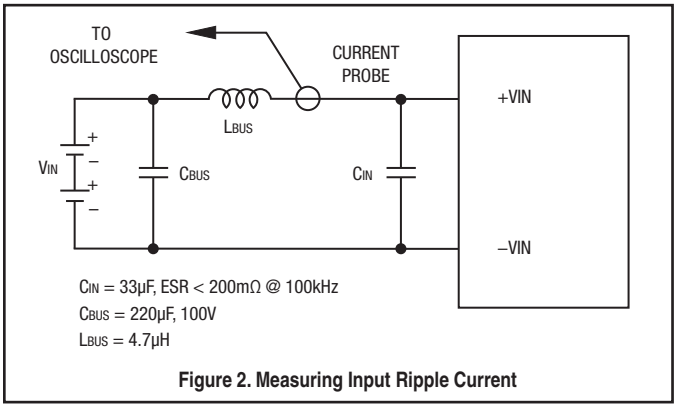

Figure 2. Measuring Input Ripple Current

In critical applications, output ripple and noise (also referred to as periodic and random deviations or PARD) may be reduced by adding filter elements such as multiple external capacitors. Be sure to calculate component temperature rise from reflected AC current dissipated inside capacitor ESR.

Floating Outputs

Since these are isolated DC/DC converters, their outputs are "floating" with respect to their input. The essential feature of such isolation is ideal ZERO CURRENT FLOW between input and output. Real-world converters however do exhibit tiny leakage currents between input and output (see Specifications). These leakages consist of both an AC stray capacitance coupling component and a DC leakage resistance. When using the isolation feature, do not allow the isolation voltage to exceed specifications. Otherwise the converter may be damaged. Designers will normally use the negative output (-Output) as the ground return of the load circuit. You can however use the positive output (+Output) as the ground return to effectively reverse the output polarity.

Minimum Output Loading Requirements

These converters employ a synchronous rectifier design topology. All models regulate within specification and are stable under no load to full load conditions.

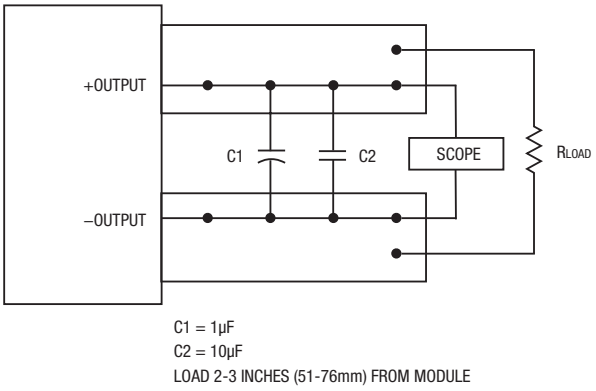

Figure 3. Measuring Output Ripple and Noise (PARD)

Thermal Shutdown

To protect against thermal over-stress, these converters include thermal shutdown circuitry. If environmental conditions cause the temperature of the DC/DC's to rise above the Operating Temperature Range up to the shutdown temperature, an on-board electronic temperature sensor will power down the unit. When the temperature decreases below the turn-on threshold, the converter will automatically restart. There is a small amount of hysteresis to prevent rapid on/off cycling. CAUTION: If you operate too close to the thermal limits, the converter may shut down suddenly without warning. Be sure to thoroughly test your application to avoid unplanned thermal shutdown.

Temperature Derating Curves

The graphs in this data sheet illustrate typical operation under a variety of conditions. The Derating curves show the maximum continuous ambient air temperature and decreasing maximum output current which is acceptable under increasing forced airflow measured in Linear Feet per Minute ("LFM"). Note that these are AVERAGE measurements. The converter will accept brief increases in temperature and/or current or reduced airflow as long as the average is not exceeded.

Note that the temperatures are of the ambient airflow, not the converter itself which is obviously running at higher temperature than the outside air. Also note that "natural convection" is defined as very low flow rates which are not using fan-forced airflow. Depending on the application, "natural convection" is usually about 30-65 LFM but is not equal to still air (0 LFM).

Murata Power Solutions makes Characterization measurements in a closed cycle wind tunnel with calibrated airflow. We use both thermocouples and an infrared camera system to observe thermal performance. As a practical matter, it is quite difficult to insert an anemometer to precisely measure airflow in most applications. Sometimes it is possible to estimate the effective airflow if you thoroughly understand the enclosure geometry, entry/exit orifice areas and the fan flowrate specifications.

CAUTION: If you exceed these Derating guidelines, the converter may have an unplanned Over Temperature shut down. Also, these graphs are all collected near Sea Level altitude. Be sure to reduce the derating for higher altitude.

Output Overvoltage Protection (OVP)

This converter monitors its output voltage for an over-voltage condition using an on-board electronic comparator. The signal is optically coupled to the primary side PWM controller. If the output exceeds OVP limits, the sensing circuit will power down the unit, and the output voltage will decrease. After a time-out period, the PWM will automatically attempt to restart, causing the output voltage to ramp up to its rated value. It is not necessary to power down and reset the converter for this automatic OVP-recovery restart.

If the fault condition persists and the output voltage climbs to excessive levels, the OVP circuitry will initiate another shutdown cycle. This on/off cycling is referred to as "hiccup" mode.

Output Fusing

The converter is extensively protected against current, voltage and temperature extremes. However, your application circuit may need additional protection. In the extremely unlikely event of output circuit failure, excessive voltage could be applied to your circuit. Consider using an appropriate external protection.

Output Current Limiting

As soon as the output current increases to approximately its overcurrent limit, the DC/DC converter will enter a current-limiting mode. The output voltage will decrease proportionally with increases in output current.

Current limiting inception is defined as the point at which full power falls below the rated tolerance. See the Performance/Functional Specifications. Note particularly that the output current may briefly rise above its rated value. This enhances reliability and continued operation of your application. If the output current is too high, the converter will enter the short circuit condition.

Output Short Circuit Condition

When a converter is in current-limit mode, the output voltage will drop as the output current demand increases. If the output voltage drops too low, the magnetically coupled voltage used to develop PWM bias voltage will also drop, thereby shutting down the PWM controller. Following a time-out period, the PWM will restart, causing the output voltage to begin rising to its appropriate value. If the short-circuit condition persists, another shutdown cycle will initiate. This on/off cycling is called "hiccup mode." The hiccup cycling reduces the average output current, thereby preventing excessive internal temperatures.

Trimming the Output Voltage (See Specification Note 7)

The Trim input to the converter allows the user to adjust the output voltage over the rated trim range (please refer to the Specifications). In the trim equations and circuit diagrams that follow, trim adjustments use a single fixed resistor connected between the Trim input and either Vout pin. Trimming resistors should have a low temperature coefficient (±100 ppm/deg.C or less) and be mounted close to the converter. Keep leads short. If the trim function is not used, leave the trim unconnected. With no trim, the converter will exhibit its specified output voltage accuracy.

There are two CAUTIONs to observe for the Trim input:

CAUTION: To avoid unplanned power down cycles, do not exceed EITHER the maximum output voltage OR the maximum output power when setting the trim. If the output voltage is excessive, the OVP circuit may inadvertantly shut down the converter. If the maximum power is exceeded, the converter may enter current limiting. If the power is exceeded for an extended period, the converter may overheat and encounter overtemperature shut down.

CAUTION: Be careful of external electrical noise. The Trim input is a senstive input to the converter's feedback control loop. Excessive electrical noise may cause instability or oscillation. Keep external connections short to the Trim input. Use shielding if needed.

Trim Equations

$$R_{adj_up}\,(\text{in k}\Omega) = 5.11 \times \left[\frac{12V \times (1+\Delta)}{1.225 \times \Delta} - \frac{1}{\Delta} - 2\right]$$

$$\text{where } \Delta = \frac{V_{out} - 12V}{12V}$$

$$R_{adj_down}\,(\text{in k}\Omega) = 5.11 \times \left[\frac{1}{\Delta} - 2\right]$$

$$\text{where } \Delta = \frac{12V - V_{out}}{12V}$$

Where Vout = Desired output voltage. Adjustment accuracy is subject to resistor tolerances and factory-adjusted output accuracy. Mount trim resistor close to converter. Use short leads. Note that "Δ" is given as a small fraction, not a percentage.

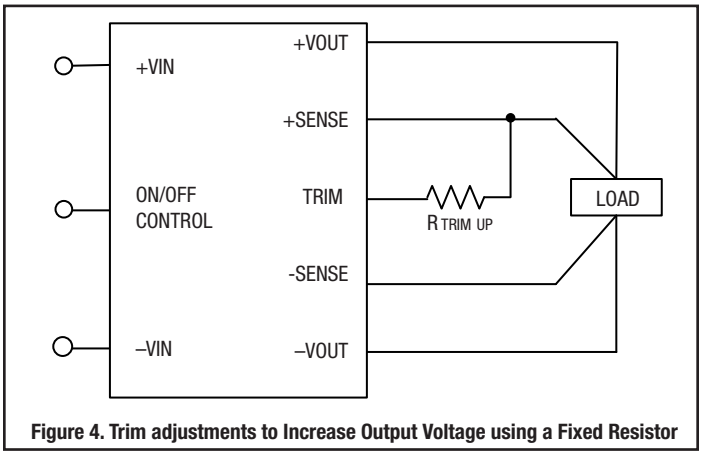

Figure 4. Trim adjustments to Increase Output Voltage using a Fixed Resistor

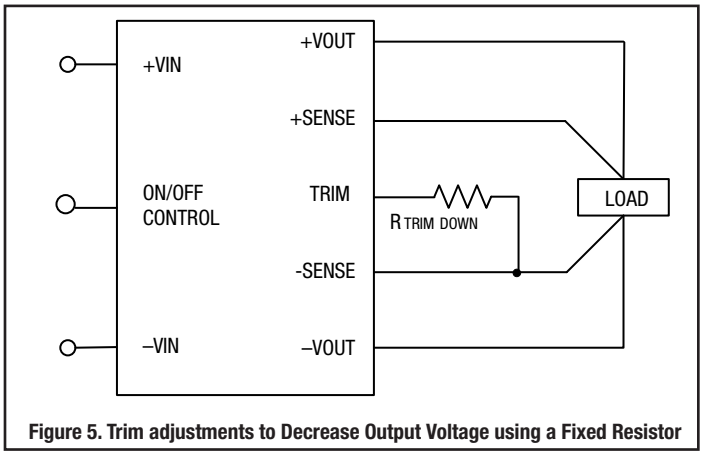

Figure 5. Trim adjustments to Decrease Output Voltage using a Fixed Resistor

Remote On/Off Control

On the input side, a remote On/Off Control can be specified with either positive or negative logic as follows:

Positive: Models equipped with Positive Logic are enabled when the On/Off pin is left open or is pulled high to +13.5VDC with respect to –VIN. An internal bias current causes the open pin to rise to +VIN. Positive-logic devices are disabled when the On/Off is grounded or brought to within a low voltage (see Specifications) with respect to –VIN.

On positive-logic models, to reduce noise coupling on the external on/off control, use the circuit shown in figure 6.

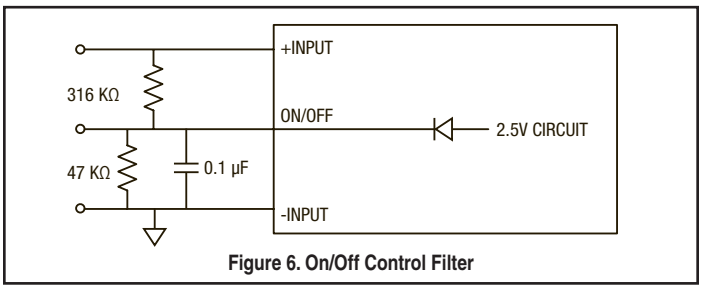

Figure 6. On/Off Control Filter

Negative: Models with negative logic are on (enabled) when the On/Off is grounded or brought to within a low voltage (see Specifications) with respect to –VIN. The device is off (disabled) when the On/Off is left open or is pulled high to +13.5VDC Max. with respect to –VIN.

Dynamic control of the On/Off function should be able to sink the specified signal current when brought low and withstand specified voltage when brought high. Be aware too that there is a finite time in milliseconds (see Specifications) between the time of On/Off Control activation and stable, regulated output. This time will vary slightly with output load type and current and input conditions.

There are two CAUTIONs for the On/Off Control:

CAUTION: While it is possible to control the On/Off with external logic if you carefully observe the voltage levels, the preferred circuit is either an open drain/open collector transistor or a relay (which can thereupon be controlled by logic). The On/Off prefers to be set at approx. +13.5V (open pin) for the ON state, assuming positive logic.

CAUTION: Do not apply voltages to the On/Off pin when there is no input power voltage. Otherwise the converter may be permanently damaged.

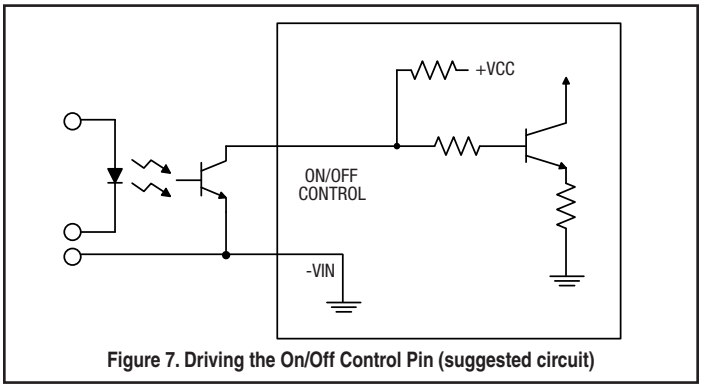

Figure 7. Driving the On/Off Control Pin (suggested circuit)

Remote Sense Input (See Specification Note 7)

Sense inputs compensate for output voltage inaccuracy delivered at the load. This is done by correcting voltage drops along the output wiring such as moderate IR drops and the current carrying capacity of PC board etch. Sense inputs also improve the stability of the converter and load system by optimizing the control loop phase margin.

Note: The Sense input and power Vout lines are internally connected through low value resistors to their respective polarities so that the converter can operate without external connection to the Sense. Nevertheless, if the Sense function is not used for remote regulation, the user should connect +Sense to +Vout and –Sense to –Vout at the converter pins.

The remote Sense lines carry very little current. They are also capacitively coupled to the output lines and therefore are in the feedback control loop to regulate and stabilize the output. As such, they are not low impedance inputs and must be treated with care in PC board layouts. Sense lines on the PCB should run adjacent to DC signals, preferably Ground. In cables and discrete wiring, use twisted pair, shielded tubing or similar techniques

Please observe Sense inputs tolerance to avoid improper operation:

[Vout(+) –Vout(-)] – [Sense(+) – Sense(-)] ≤ 10% of Vout

Output overvoltage protection is monitored at the output voltage pin, not the Sense pin. Therefore excessive voltage differences between Vout and Sense together with trim adjustment of the output can cause the overvoltage protection circuit to activate and shut down the output.

Power derating of the converter is based on the combination of maximum output current and the highest output voltage. Therefore the designer must ensure:

(Vout at pins) x (Iout) ≤ (Max. rated output power)

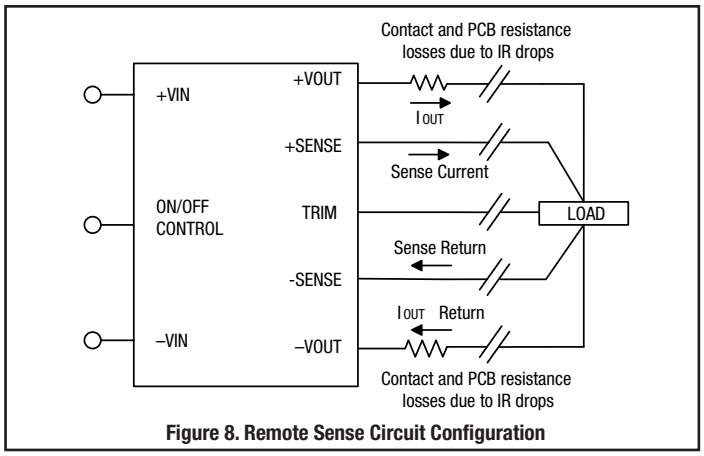

Figure 8. Remote Sense Circuit Configuration

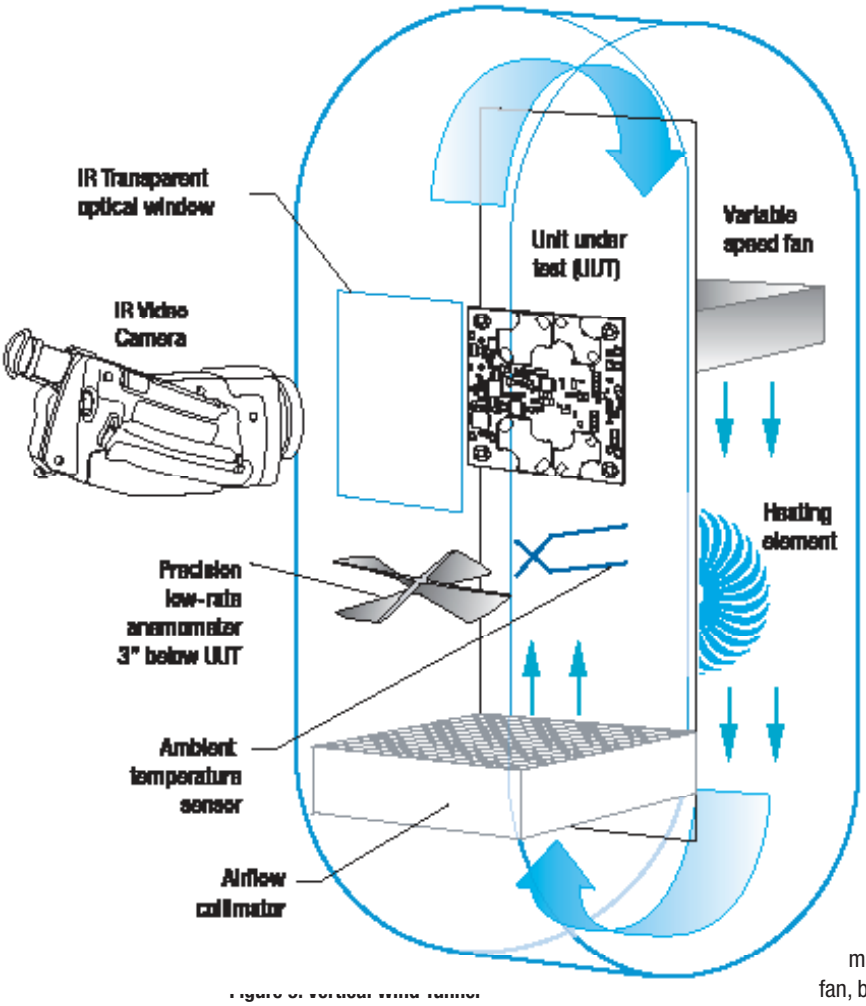

Vertical Wind Tunnel

Murata Power Solutions employs a computer controlled custom-designed closed loop vertical wind tunnel, infrared video camera system, and test instrumentation for accurate airflow and heat dissipation analysis of power products. The system includes a precision low flow-rate anemometer, variable speed fan, power supply input and load controls, temperature gauges, and adjustable heating element.

The IR camera monitors the thermal performance of the Unit Under Test (UUT) under static steady-state conditions. A special optical port is used which is transparent to infrared wavelengths.

Both through-hole and surface mount converters are soldered down to a 10˝X10˝ host carrier board for realistic heat absorption and spreading. Both longitudinal and transverse airflow studies are possible by rotation of this carrier board since there are often significant differences in the heat dissipation in the two airflow directions. The combination of adjustable airflow, adjustable ambient heat, and adjustable Input/Output currents and voltages mean that a very wide range of measurement conditions can be studied.

The collimator reduces the amount of turbulence adjacent to the UUT by minimizing airflow turbulence. Such turbulence influences the effective heat transfer characteristics and gives false readings. Excess turbulence removes more heat from some surfaces and less heat from others, possibly causing uneven overheating.

Both sides of the UUT are studied since there are different thermal gradients on each side. The adjustable heating element and fan, built-in temperature gauges, and no-contact IR camera mean that power supplies are tested in real-world conditions.

Soldering Guidelines

Murata Power Solutions recommends the specifications below when installing these converters. These specifications vary depending on the solder type. Exceeding these specifications may cause damage to the product. Your production environment may differ; therefore please thoroughly review these guidelines with your process engineers.

Wave Solder Operations for through-hole mounted products (THMT)			
For Sn/Ag/Cu based solders:		For Sn/Pb based solders:	
Maximum Preheat Temperature	115° C.	Maximum Preheat Temperature	105° C.
Maximum Pot Temperature	270° C.	Maximum Pot Temperature	250° C.
Maximum Solder Dwell Time	7 seconds	Maximum Solder Dwell Time	6 seconds

Murata Power Solutions, Inc. makes no representation that the use of its products in the circuits described herein, or the use of other technical information contained herein, will not infringe upon existing or future patent rights. The descriptions contained herein do not imply the granting of licenses to make, use, or sell equipment constructed in accordance therewith. Specifi cations are subject to change without notice.
© 2018 Murata Power Solutions, Inc.