TPS54302 4.5-V to 28-V Input, 3-A Output, EMI-Friendly Synchronous Step-Down Converter

1 Features

- 4.5-V to 28-V wide input voltage range
- Integrated 85-mΩ and 40-mΩ MOSFETs for 3-A, continuous output current
- Low 2-µA shutdown, 45-µA quiescent current
- Internal 5-ms soft start
- Fixed 400-kHz switching frequency
- Frequency spread spectrum to reduce EMI
- Advanced Eco-mode™ pulse skip
- Peak current-mode control
- Internal loop compensation
- Overcurrent protection for both MOSFETs with hiccup mode protection
- Overvoltage protection
- Thermal shutdown
- SOT-23 (6) package

2 Applications

- 12-V, 24-V distributed power-bus supply
- Industry application
  - White goods
- Consumer application
  - Audio
  - STB, DTV
  - Printer

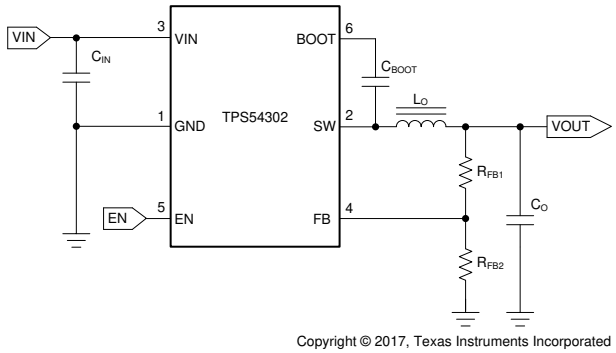

Simplified Schematic

3 Description

The TPS54302 device is a 4.5-V to 28-V input voltage range, 3-A synchronous buck converter. The device includes two integrated switching FETs, internal loop compensation, and 5-ms internal soft start to reduce component count.

By integrating the MOSFETs and employing the SOT-23 package, the TPS54302 device achieves the high power density and offers a small footprint on the PCB.

Advanced Eco-mode implementation maximizes the light load efficiency and reduces the power loss.

In the TPS54302 device, the frequency spread spectrum operation is introduced for EMI reduction.

Cycle-by-cycle current limit in both high-side MOSFET protects the converter in an overload condition and is enhanced by a low-side MOSFET freewheeling current limit which prevents current runaway. Hiccup mode protection is triggered if the overcurrent condition has persisted for longer than the present time.

Device Information

PART NUMBER	PACKAGE(1)	BODY SIZE (NOM)
TPS54302	SOT-23-THIN (6)	1.60 mm × 2.90 mm

(1) For all available packages, see the orderable addendum at the end of the data sheet.

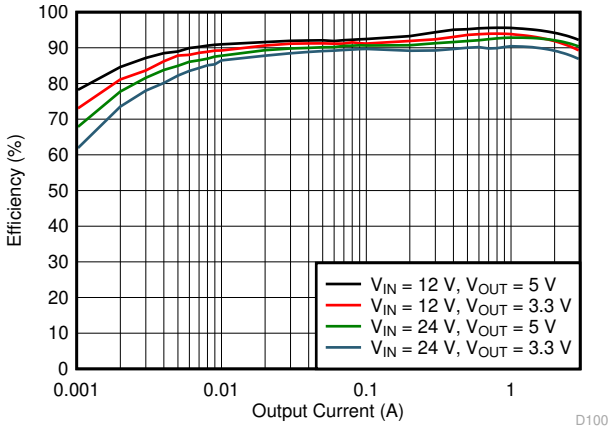

Efficiency vs Output Current

An IMPORTANT NOTICE at the end of this data sheet addresses availability, warranty, changes, use in safety-critical applications, intellectual property matters and other important disclaimers. PRODUCTION DATA.

Table of Contents

1 Features....1
2 Applications....1
3 Description....1
4 Revision History....2
5 Pin Configuration and Functions....3
6 Specifications....4
6.1 Absolute Maximum Ratings....4
6.2 ESD Ratings....4
6.3 Recommended Operating Conditions....4
6.4 Thermal Information....4
6.5 Electrical Characteristics....5
6.6 Timing Requirements....5
6.7 Typical Characteristics....6
7 Detailed Description....8
7.1 Overview....8
7.2 Functional Block Diagram....9
7.3 Feature Description....9
7.4 Device Functional Modes....13
8 Application and Implementation....14
8.1 Application Information....14
8.2 Typical Application....14
9 Power Supply Recommendations....21
10 Layout....22
10.1 Layout Guidelines....22
10.2 Layout Example....22
11 Device and Documentation Support....23
11.1 Device Support....23
11.2 Receiving Notification of Documentation Updates....23
11.3 Support Resources....23
11.4 Trademarks....23
11.5 Electrostatic Discharge Caution....23
11.6 Glossary....23
12 Mechanical, Packaging, and Orderable Information....23

4 Revision History

NOTE: Page numbers for previous revisions may differ from page numbers in the current version.

Changes from Revision A (May 2016) to Revision B (April 2021)	Page
• Updated the numbering format for tables, figures, and cross-references throughout the document.	1

Changes from Revision * (May 2016) to Revision A (May 2016)	Page
• Changed from Product Preview to Production Data	1

Copyright © 2021 Texas Instruments Incorporated

5 Pin Configuration and Functions

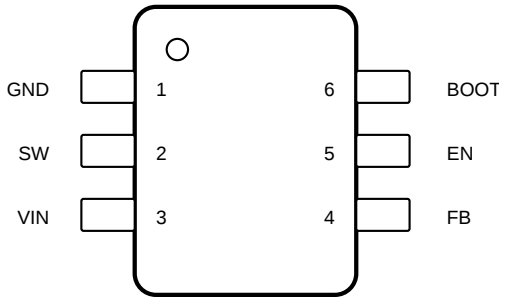

Figure 5-1. DDC Package 6-Pin SOT-23-THIN Top View

Table 5-1. Pin Functions

PIN		TYPE(1)	DESCRIPTION
NAME	NO.		
BOOT	6	O	Supply input for the high-side NFET gate drive circuit. Connect a 0.1-µF capacitor between BOOT and SW pins.
EN	5	I	This pin is the enable pin. Float the EN pin to enable.
FB	4	I	Converter feedback input. Connect to output voltage with feedback resistor divider.
GND	1	—	Ground pin Source terminal of low-side power NFET as well as the ground terminal for controller circuit. Connect sensitive V_{FB} to this GND at a single point.
SW	2	O	Switch node connection between high-side NFET and low-side NFET.
VIN	3	—	Input voltage supply pin. The drain terminal of high-side power NFET.

(1) O = output; I = input

6 Specifications

6.1 Absolute Maximum Ratings

over operating free-air temperature range (unless otherwise noted)[1]

		MIN	MAX	UNIT
Input voltage, V_I	VIN	–0.3	30	V
	EN	–0.3	7	V
	FB	–0.3	7	V
Output voltage, V_O	BOOT-SW	–0.3	7	V
	SW	–0.3	30	V
	SW (20 ns transient)	–5	30	V
Operating junction temperature, T_J		–40	150	°C
Storage temperature, T_{stg}		–65	150	°C

(1) Stresses beyond those listed under *Absolute Maximum Ratings* may cause permanent damage to the device. These are stress ratings only, which do not imply functional operation of the device at these or any other conditions beyond those indicated under *Recommended Operating Conditions*. Exposure to absolute-maximum-rated conditions for extended periods may affect device reliability.

6.2 ESD Ratings

			VALUE	UNIT
$V_{(ESD)}$	Electrostatic discharge	Human-body model (HBM), per ANSI/ESDA/JEDEC JS-001[1]	±4000	V
		Charged-device model (CDM), per JEDEC specification JESD22-C101[2]	±1500	

(1) JEDEC document JEP155 states that 500-V HBM allows safe manufacturing with a standard ESD control process.
(2) JEDEC document JEP157 states that 250-V CDM allows safe manufacturing with a standard ESD control process.

6.3 Recommended Operating Conditions

over operating free-air temperature range (unless otherwise noted)

			MIN	MAX	UNIT
V_I	Input voltage	VIN	4.5	28	V
		EN	–0.1	7	V
		FB	–0.1	7	V
V_O	Output voltage	BOOT-SW	–0.1	7	V
		SW	–0.1	28	V
T_J	Operating junction temperature		–40	125	°C

6.4 Thermal Information

THERMAL METRIC[1]		TPS54302 DDC (SOT-23) 6 PINS	UNIT
$R_{\theta JA}$	Junction-to-ambient thermal resistance	87.1	°C/W
$R_{\theta JC(top)}$	Junction-to-case (top) thermal resistance	35.5	°C/W
$R_{\theta JB}$	Junction-to-board thermal resistance	14.4	°C/W
ψ_{JT}	Junction-to-top characterization parameter	0.9	°C/W
ψ_{JB}	Junction-to-board characterization parameter	14.2	°C/W

(1) For more information about traditional and new thermal metrics, see the *Semiconductor and IC Package Thermal Metrics* application report.

Copyright © 2021 Texas Instruments Incorporated

6.5 Electrical Characteristics

The electrical ratings specified in this section apply to all specifications in this document, unless otherwise noted. These specifications are interpreted as conditions that do not degrade the device parametric or functional specifications for the life of the product containing it. T_J = –40°C to +125°C, V_{IN} = 4.5 V to 28 V, (unless otherwise noted).

PARAMETER		TEST CONDITIONS	MIN	TYP	MAX	UNIT
INPUT SUPPLY						
V_{IN}	Input voltage range		4.5		28	V
I_Q	Non switching quiescent current	EN = 5 V, V_{FB} = 1 V		45		µA
I_{OFF}	Shut down current	EN = GND		2		µA
$V_{IN(UVLO)}$	VIN under voltage lockout	Rising V_{IN}	3.8	4.1	4.4	V
		Falling V_{IN}	3.3	3.6	3.9	V
	Hysteresis		400	480	560	mV
ENABLE (EN PIN)						
$V_{ENrising}$	Enable threshold	Rising		1.21	1.28	V
$V_{ENfalling}$		Falling	1.1	1.19		V
$I_{(EN_INPUT)}$	Input current	V_{EN} = 1 V		0.7		µA
$I_{(EN_HYS)}$	Hysteresis current	V_{EN} = 1.5 V		1.55		µA
FEEDBACK AND ERROR AMPLIFIER						
V_{FB}	Feedback Voltage	V_{IN} = 12 V	0.581	0.596	0.611	V
PULSE SKIP MODE						
$I_{(SKIP)}$ (1)	Pulse skip mode peak inductor current threshold	V_{IN} = 12 V, V_{OUT} = 5 V, L = 10 µH		500		mA
POWER STAGE						
$R_{(HSD)}$	High-side FET on resistance	T_A = 25°C, V_{BST} – SW = 6 V		85		mΩ
$R_{(LSD)}$	Low-side FET on resistance	T_A = 25°C, V_{IN} = 12		40		mΩ
CURRENT LIMIT						
$I_{(LIM_HS)}$	High-side current limit	Maximum inductor peak current	4	5	5.9	A
$I_{(LIM_LS)}$	Low-side source current limit	Maximum inductor valley current	3.1	4	5.5	A
OSCILLATOR						
f_{SW}	Centre switching frequency		290	400	510	kHz
OVERTEMPERATURE PROTECTION						
Thermal Shutdown(1)	Rising temperature			165		°C
	Hysteresis			10		°C
	Hiccup time			32768		Cycles

(1) Not production tested

6.6 Timing Requirements

		MIN	NOM	MAX	UNIT
OVERCURRENT PROTECTION					
t_{HIC_WAIT}	Hiccup wait time		512		Cycles
$t_{HIC_RESTART}$	Hiccup time before restart		16384		Cycles
t_{SS}	Soft-start time		5		ms
ON TIME CONTROL					
t_{MIN_ON} (1)	Minimum on time, measured at 90% to 90% and 1-A loading		110		ns

(1) Not production tested

6.7 Typical Characteristics

V_{IN} = 12, unless otherwise specified

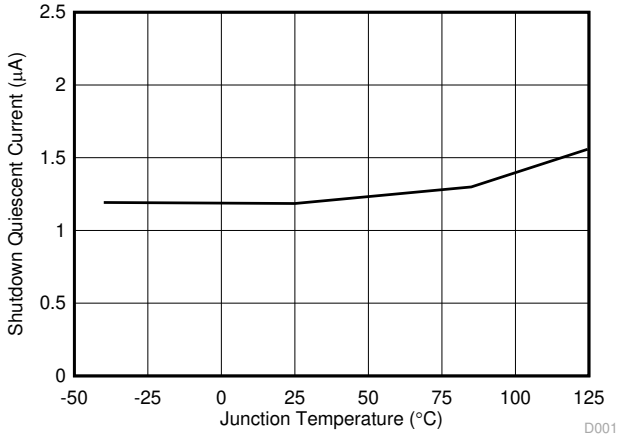

Figure 6-1. Shutdown Quiescent Current vs Junction Temperature

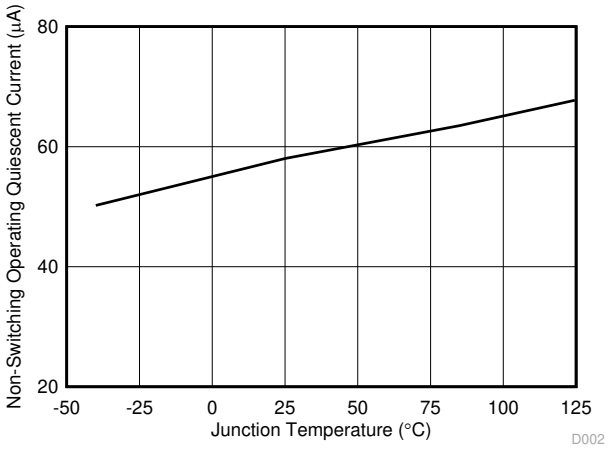

Figure 6-2. Non-Switching Operating Quiescent Current vs Junction Temperature

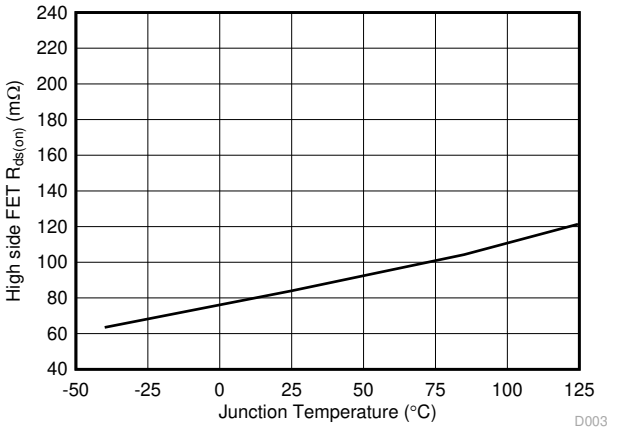

Figure 6-3. High-Side Resistance vs Junction Temperature

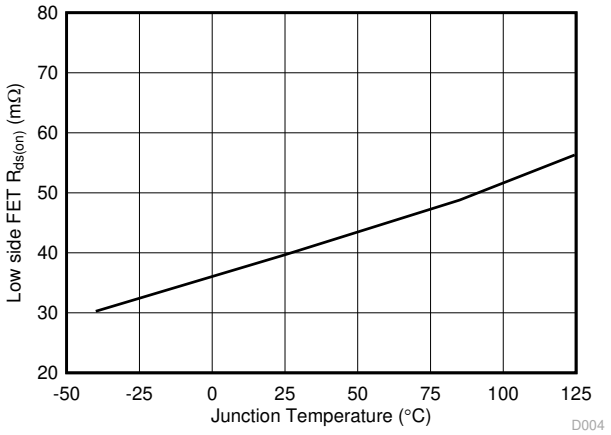

Figure 6-4. Low-Side FET On Resistance vs Junction Temperature

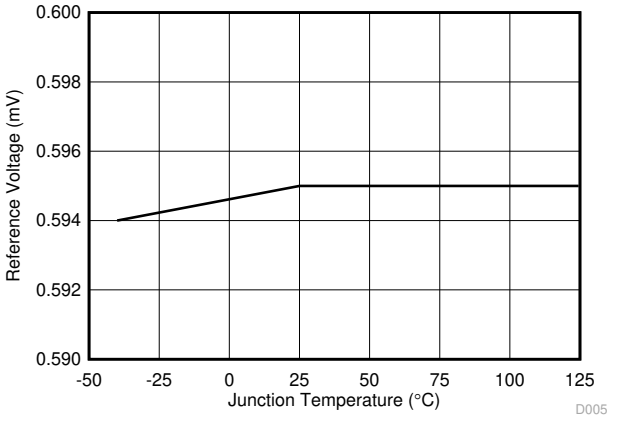

Figure 6-5. Reference Voltage vs Junction Temperature

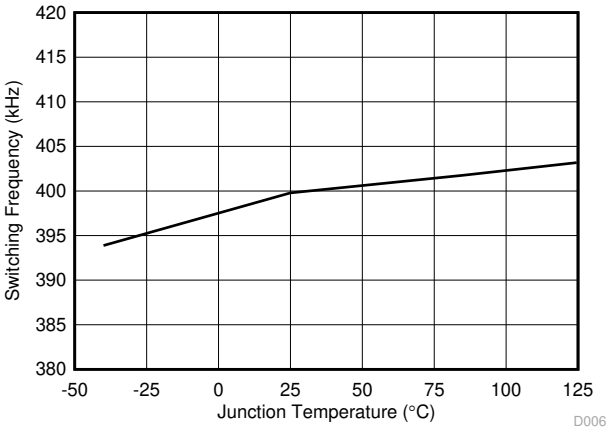

Figure 6-6. Centre Switching Frequency vs Junction Temperature

Copyright © 2021 Texas Instruments Incorporated

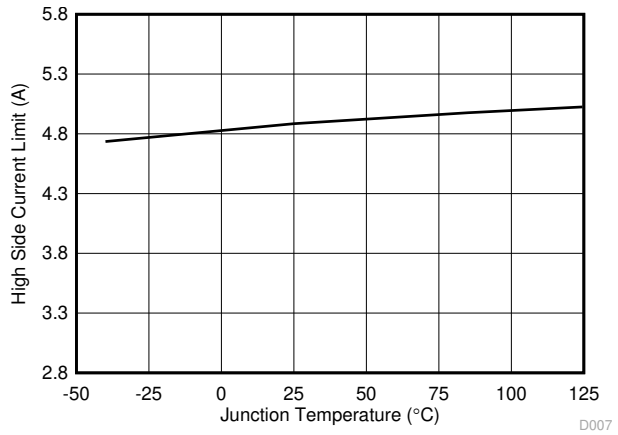

Figure 6-7. High-Side Current Limit Threshold vs Junction Temperature

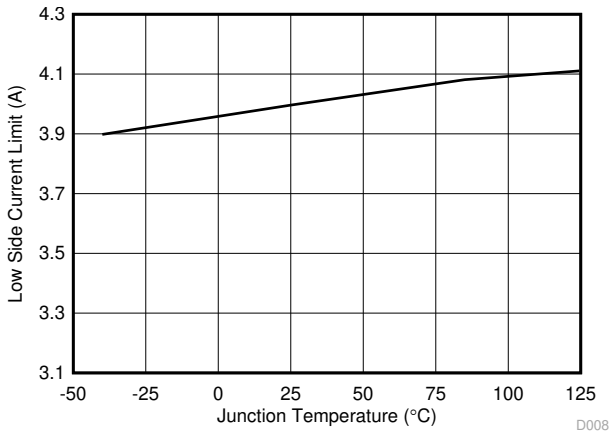

Figure 6-8. Low-Side Current Limit Threshold vs Junction Temperature

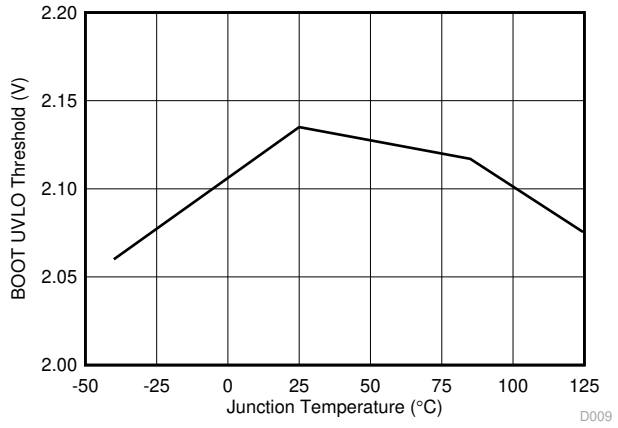

Figure 6-9. BOOT-SW UVLO Threshold vs Junction Temperature

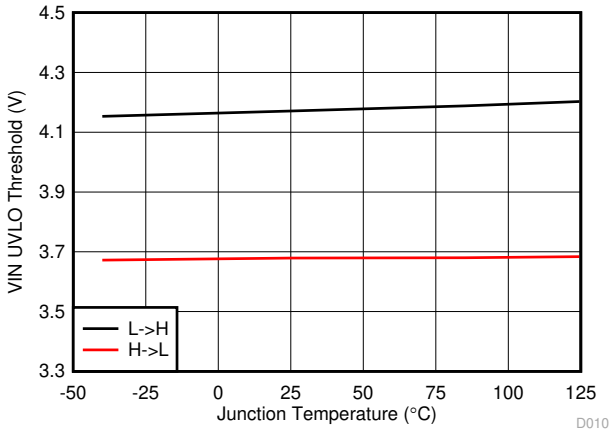

Figure 6-10. VIN UVLO Threshold vs Junction Temperature

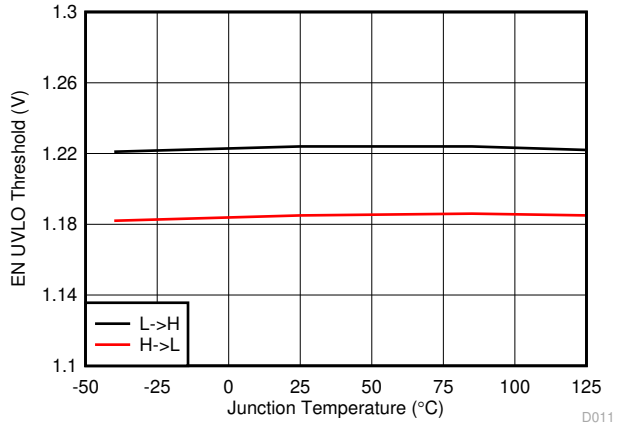

Figure 6-11. EN Threshold vs Junction Temperature

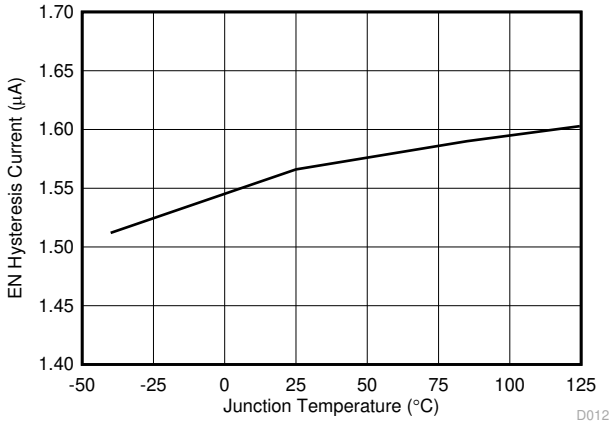

Figure 6-12. EN Hysteresis Current vs Junction Temperature

7 Detailed Description

7.1 Overview

The TPS54302 device is a 28-V, 3-A, synchronous step-down (buck) converter with two integrated n-channel MOSFETs. To improve performance during line and load transients the device implements a constant-frequency, peak current-mode control which reduces output capacitance. The optimized internal compensation network minimizes the external component counts and simplifies the control loop design.

The switching frequency of the device is fixed to 400 kHz.

The TPS54302 device starts switching when VIN is 4.5 V. The operating current is 45 µA (typical) when not switching and under no load. When the device is disabled, the supply current is 2 µA (typical).

The integrated 85-mΩ high-side MOSFET and 40-mΩ low-side MOSFET allow for high-efficiency power-supply designs with continuous output currents up to 3 A.

The TPS54302 device reduces the external component count by integrating the boot recharge diode. The bias voltage for the integrated high-side MOSFET is supplied by an external capacitor on the BOOT to PH pins. The boot capacitor voltage is monitored by an UVLO circuit and turns off the high-side MOSFET when the voltage falls below a preset threshold of 2.1 V (typical).

The device minimizes excessive output overvoltage transients by taking advantage of the overvoltage comparator. When the regulated output voltage is greater than 108% of the nominal voltage, the overvoltage comparator is activated, and the high-side MOSFET is turned off and masked from turning on until the output voltage is lower than 104%.

The TPS54302 device has internal 5-ms soft-start time to minimize inrush currents.

Copyright © 2021 Texas Instruments Incorporated

7.2 Functional Block Diagram

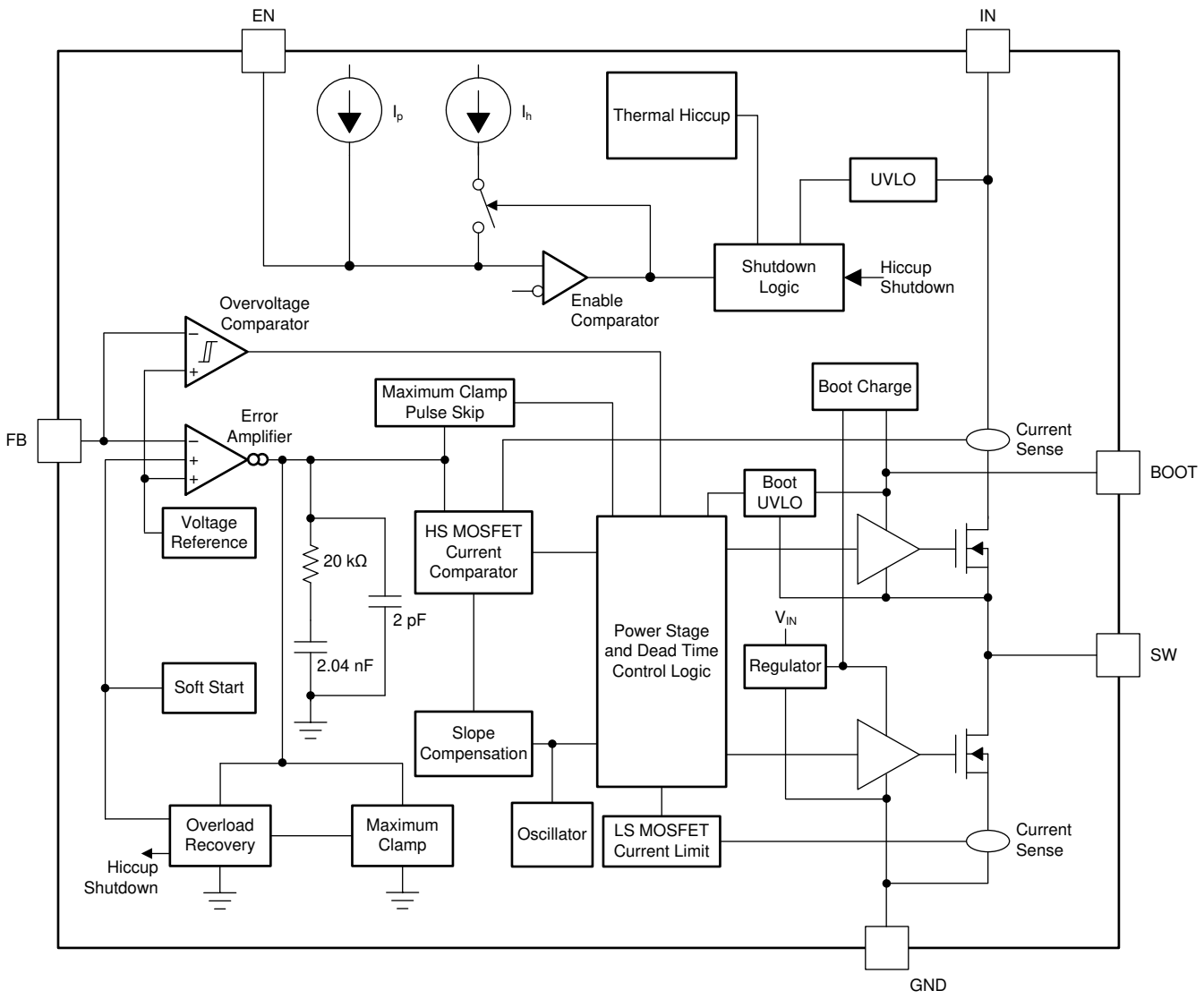

Copyright © 2017, Texas Instruments Incorporated

7.3 Feature Description

7.3.1 Fixed-Frequency PWM Control

The device uses a fixed-frequency, peak current-mode control. The output voltage is compared through external resistors on the FB pin to an internal voltage reference by an error amplifier. An internal oscillator initiates the turnon of the high-side power switch. The error amplifier output is compared to the current of the high-side power switch. When the power-switch current reaches the error amplifier output voltage level, the high-side power switch is turned off and the low-side power switch is turned on. The error amplifier output voltage increases and decreases as the output current increases and decreases. The device implements a current-limit by clamping the error amplifier voltage to a maximum level and also implements a minimum clamp for improved transient-response performance.

7.3.2 Pulse Skip Mode

The TPS54302 device is designed to operate in pulse-skipping mode at light-load currents to boost light-load efficiency. When the peak inductor current is lower than 500 mA (typical), the device enters pulse-skipping mode. When the device is in pulse-skipping mode, the error amplifier output voltage is clamped which prevents the high-side integrated MOSFET from switching. The peak inductor current must rise above 500 mA and exit

pulse skip mode. Because the integrated current comparator catches the peak inductor current only, the average load current entering pulse-skipping mode varies with the applications and external output filters.

7.3.3 Error Amplifier

The device has a transconductance amplifier as the error amplifier. The error amplifier compares the FB voltage to the lower of the internal soft-start voltage or the internal 0.596-V voltage reference. The transconductance of the error amplifier is 240 µA/V (typical). The frequency compensation components are placed internal between the output of the error amplifier and ground.

7.3.4 Slope Compensation and Output Current

The device adds a compensating ramp to the signal of the switch current. This slope compensation prevents sub-harmonic oscillations as the duty cycle increases. The available peak inductor current remains constant over the full duty-cycle range.

7.3.5 Enable and Adjusting Undervoltage Lockout

The EN pin provides electrical on and off control of the device. When the EN pin voltage exceeds the threshold voltage, the device begins operation. If the EN pin voltage is pulled below the threshold voltage, the regulator stops switching and enters the low-quiescent (IQ) state.

The EN pin has an internal pullup-current source which allows the user to float the EN pin to enable the device. If an application requires control of the EN pin, use open-drain or open-collector output logic to interface with the pin.

The device implements internal undervoltage-lockout (UVLO) circuitry on the VIN pin. The device is disabled when the VIN pin voltage falls below the internal VIN UVLO threshold. The internal VIN UVLO threshold has a hysteresis of 480 mV.

If an application requires a higher UVLO threshold on the VIN pin, then the EN pin can be configured as shown in Figure 7-1. When using the external UVLO function, setting the hysteresis at a value greater than 500 mV is recommended.

The EN pin has a small pullup current, I_p, which sets the default state of the pin to enable when no external components are connected. The pullup current is also used to control the voltage hysteresis for the UVLO function because it increases by I_h when the EN pin crosses the enable threshold. Use Equation 1 and Equation 2 to calculate the values of R4 and R5 for a specified UVLO threshold.

Copyright © 2021 Texas Instruments Incorporated

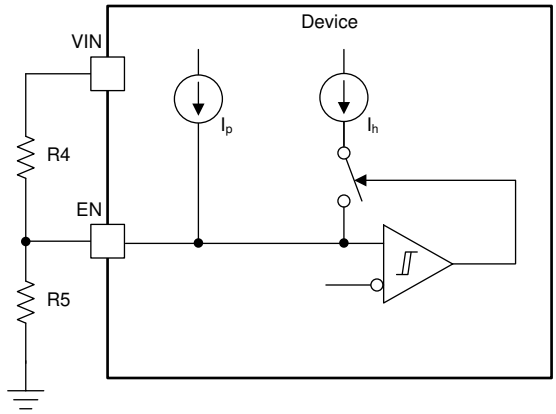

Figure 7-1. Adjustable VIN Undervoltage Lockout

$$R4 = \frac{V_{START}\left(\frac{V_{ENfalling}}{V_{ENrising}}\right) - V_{STOP}}{I_p\left(1 - \frac{V_{ENfalling}}{V_{ENrising}}\right) + I_h} \quad (1)$$

where

- I_p = 0.7 µA
- I_h = 1.55 µA
- $V_{ENfalling}$ = 1.19 V
- $V_{ENrising}$ = 1.22 V

$$R5 = \frac{R4 \times V_{ENfalling}}{V_{STOP} - V_{ENfalling} + R4\left(I_p + I_h\right)} \quad (2)$$

7.3.6 Safe Startup into Pre-Biased Outputs

The device has been designed to prevent the low-side MOSFET from discharging a prebiased output. During monotonic prebiased startup, both high-side and low-side MOSFETs are not allowed to be turned on until the internal soft-start voltage is higher than FB pin voltage.

7.3.7 Voltage Reference

The voltage reference system produces a precise ±2.5% voltage-reference over temperature by scaling the output of a temperature stable band-gap circuit. The typical voltage reference is designed at 0.596 V.

7.3.8 Adjusting Output Voltage

The output voltage is set with a resistor divider from the output node to the FB pin. TI recommends using divider resistors with 1% tolerance or better. Start with 100 kΩ for the upper resistor divider, use Equation 3 to calculate the output voltage. To improve efficiency at light loads consider using larger value resistors. If the values are too high the regulator is more susceptible to noise and voltage errors from the FB input current are noticeable.

$$V_{OUT} = V_{ref} \times \left[\frac{R2}{R3} + 1\right] \quad (3)$$

7.3.9 Internal Soft-Start

The TPS54302 device uses the internal soft-start function. The internal soft start time is set to 5 ms (typical).

7.3.10 Bootstrap Voltage (BOOT)

The TPS54302 device has an integrated boot regulator and requires a 0.1-µF ceramic capacitor between the BOOT and SW pins to provide the gate-drive voltage for the high-side MOSFET. A ceramic capacitor with an X7R or X5R grade dielectric is recommended because of the stable characteristics over temperature and voltage. To improve drop out, the TPS54302 device is designed to operate at 100% duty cycle as long as the BOOT to SW pin voltage is greater than 2.1 V (typical).

7.3.11 Overcurrent Protection

The device is protected from overcurrent conditions by cycle-by-cycle current limiting on both the high-side MOSFET and the low-side MOSFET.

7.3.11.1 High-Side MOSFET Overcurrent Protection

The device implements current-mode control which uses the internal COMP voltage to control the turnoff of the high-side MOSFET and the turnon of the low-side MOSFET on a cycle-by-cycle basis. During each cycle, the switch current and the current reference generated by the internal COMP voltage are compared. When the peak switch current intersects the current reference the high-side switch turns off.

7.3.11.2 Low-Side MOSFET Overcurrent Protection

While the low-side MOSFET is turned on, the conduction current is monitored by the internal circuitry. During normal operation the low-side MOSFET sources current to the load. At the end of every clock cycle, the low-side MOSFET sourcing current is compared to the internally set low-side sourcing current-limit. The inductor valley current is exceeded the low-side source current limit, the high-side MOSFET does not turn on and the low-side MOSFET stays on for the next cycle. The high-side MOSFET turns on again when the inductor valley current is below the low-side sourcing current-limit at the start of a cycle as shown in Figure 7-2.

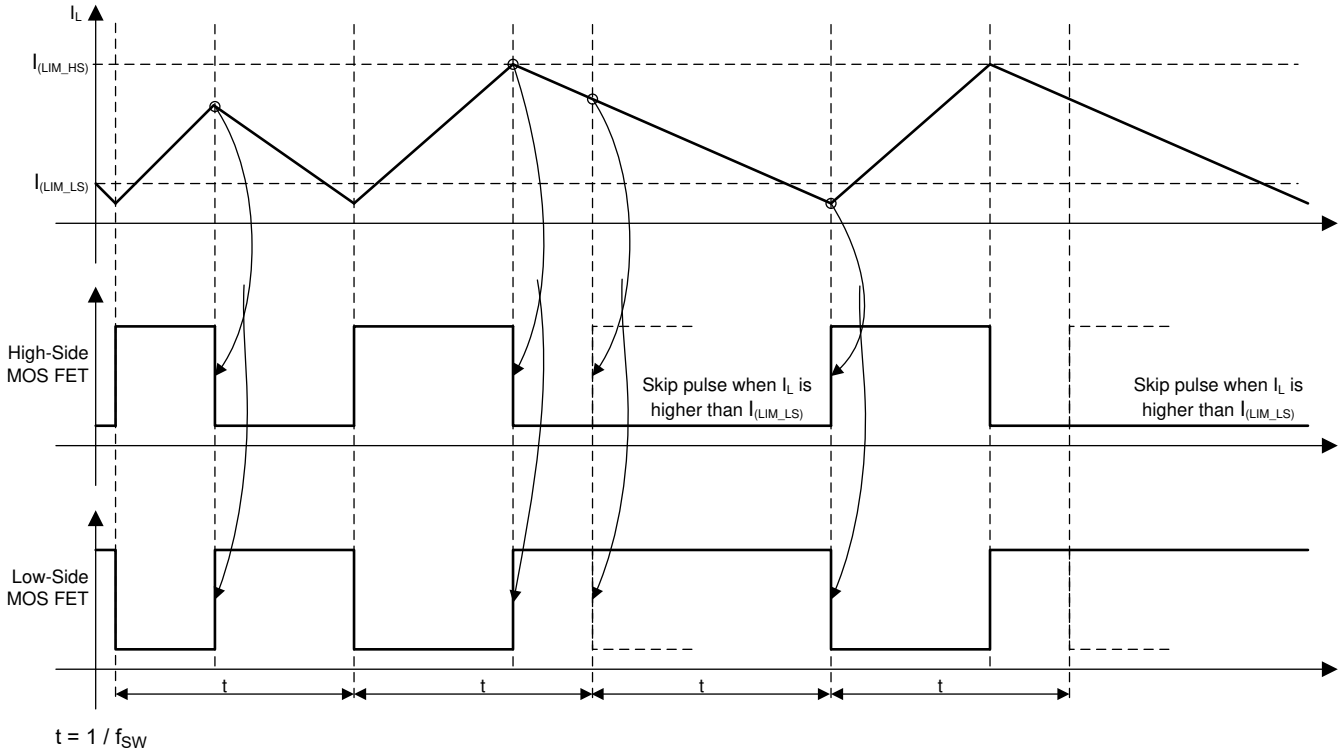

Figure 7-2. Overcurrent Protection for Both MOSFETs

Copyright © 2021 Texas Instruments Incorporated

Furthermore, if an output overload condition occurs for more than the hiccup wait time, which is programmed for 512 switching cycles, the device shuts down and restarts after the hiccup time of 16384 cycles. The hiccup mode helps to reduce the device power dissipation under severe overcurrent conditions.

7.3.12 Spread Spectrum

To reduce EMI, the TPS54302 device introduces frequency spread spectrum. The jittering span is ±6% of the switching frequency with 1/512 swing frequency.

7.3.13 Output Overvoltage Protection (OVP)

The TPS54302 incorporates an overvoltage transient protection (OVTP) circuit to minimize output voltage overshoot when recovering from output fault conditions or strong unload transients. The OVTP circuit includes an overvoltage comparator to compare the FB pin voltage and internal thresholds. When the FB pin voltage goes above 108% × V_{ref}, the high-side MOSFET is forced off. When the FB pin voltage falls below 104% × V_{ref}, the high-side MOSFET is enabled again.

7.3.14 Thermal Shutdown

The internal thermal-shutdown circuitry forces the device to stop switching if the junction temperature exceeds 165°C (typical). When the junction temperature drops below 155°C (typical), the internal thermal-hiccup timer begins to count. The device reinitiates the power-up sequence after the built-in thermal-shutdown hiccup time (32768 cycles) is over.

7.4 Device Functional Modes

7.4.1 Normal Operation

When the input voltage is above the UVLO threshold, the TPS54302 device can operate in normal switching modes. Normal continuous conduction mode (CCM) occurs when inductor peak current is above 0 A. In CCM, the TPS54302 device operates at a fixed frequency.

7.4.2 Eco-mode™ Operation

The device is designed to operate in high-efficiency pulse-skipping mode under light-load conditions. Pulse skipping initiates when the switch current falls to 500 mA (typical). During pulse skipping, the low-side FET turns off when the switch current falls to 0 A. The switching node (the SW pin) waveform takes on the characteristics of discontinuous conduction mode (DCM) operation and the apparent switching frequency decreases. As the output current decreases, the perceived time between switching pulses increases.

Copyright © 2021 Texas Instruments Incorporated

8 Application and Implementation

Note

Information in the following applications sections is not part of the TI component specification, and TI does not warrant its accuracy or completeness. TI's customers are responsible for determining suitability of components for their purposes, as well as validating and testing their design implementation to confirm system functionality.

8.1 Application Information

The TPS54302 device is typically used as a step-down converter, which converts an input voltage from 8 V to 28 V to a fixed output voltage of 5 V.

8.2 Typical Application

8.2.1 TPS54302 8-V to 28-V Input, 5-V Output Converter

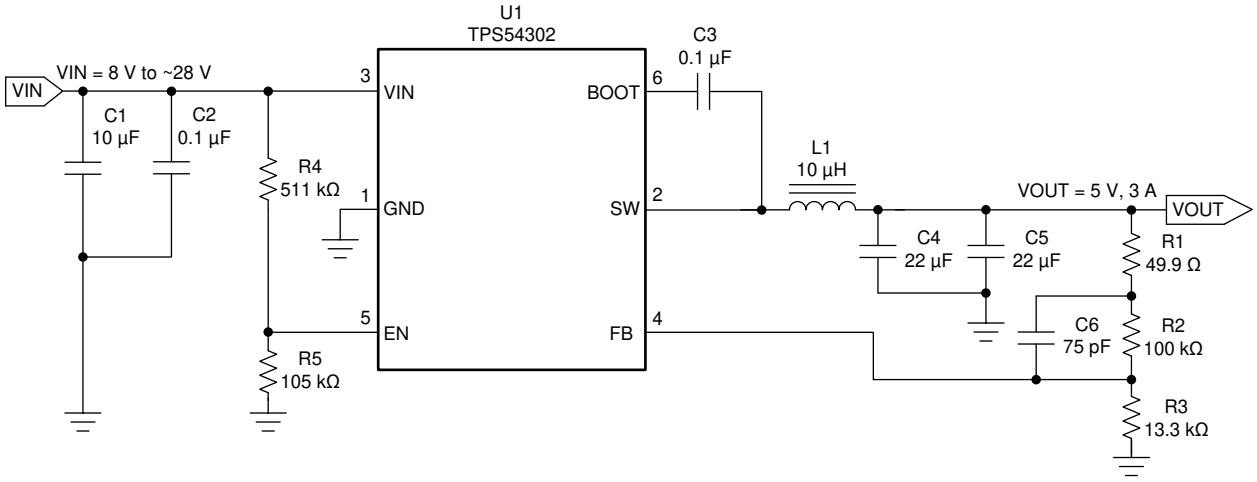

Copyright © 2017, Texas Instruments Incorporated

Figure 8-1. 5-V, 3-A Reference Design

8.2.2 Design Requirements

For this design example, use the parameters in Table 8-1.

Table 8-1. Design Parameters

PARAMETER	VALUE
Input voltage range	8 V to 28 V
Output voltage	5 V
Output current	3 A
Transient response, 1.5-A load step	ΔV_{OUT} = ±5 %
Input ripple voltage	400 mV
Output voltage ripple	30 mV_{PP}
Switching frequency	400 kHz

Copyright © 2021 Texas Instruments Incorporated

8.2.3 Detailed Design Procedure

8.2.3.1 Input Capacitor Selection

The device requires an input decoupling capacitor and a bulk capacitor is needed depending on the application. A ceramic capacitor over 10 µF is recommended for the decoupling capacitor. An additional 0.1-µF capacitor (C2) from the VIN pin to GND is optional to provide additional high frequency filtering. The capacitor voltage rating must be greater than the maximum input voltage.

Use Equation 4 to calculate the input ripple voltage (ΔV_{IN}).

$$\Delta V_{IN} = \frac{I_{OUT(MAX)} \times 0.25}{C_{BULK} \times f_{sw}} + \left(I_{OUT(MAX)} \times ESR_{MAX}\right) \tag{4}$$

where

- C_{BULK} is the bulk capacitor value.
- f_{SW} is the switching frequency.
- $I_{OUT(MAX)}$ is the maximum loading current.
- ESR_{MAX} is maximum series resistance of the bulk capacitor.

The maximum RMS (root mean square) ripple current must also be checked. For worst case conditions, use Equation 5 to calculate $I_{CIN(RMS)}$.

$$I_{CIN(RMS)} = \frac{I_{OUT(MAX)}}{2} \tag{5}$$

The actual input-voltage ripple is greatly affected by parasitic associated with the layout and the output impedance of the voltage source. The *Section 8.2.2* show the actual input voltage ripple for this circuit which is larger than the calculated value. This measured value is still below the specified input limit of 400 mV. The maximum voltage across the input capacitors is V_{IN}max + ΔV_{IN} / 2. The selected bypass capacitor is rated for 35 V and the ripple current capacity is greater than 2 A. Both values provide ample margin. The maximum ratings for voltage and current must not be exceeded under any circumstance.

8.2.3.2 Bootstrap Capacitor Selection

A 0.1-µF ceramic capacitor must be connected between the BOOT to SW pin for proper operation. TI recommends using a ceramic capacitor.

8.2.3.3 Output Voltage Set Point

The output voltage of the TPS54302 device is externally adjustable using a resistor divider network. In the application circuit of Figure 8-1, this divider network comprises R2 and R3. Use Equation 6 and Equation 7 to calculate the relationship of the output voltage to the resistor divider.

$$R3 = \frac{R2 \times V_{ref}}{V_{OUT} - V_{ref}} \tag{6}$$

$$V_{OUT} = V_{ref} \times \left[\frac{R2}{R3} + 1\right] \tag{7}$$

Select a value of R2 to be approximately 100 kΩ. Slightly increasing or decreasing the value of R3 can result in closer output voltage matching when using standard value resistors. In this design, R2 = 100 kΩ and R3 = 13.3 kΩ which results in a 5-V output voltage. The 49.9-Ω resistor, R1, is provided as a convenient location to break the control loop for stability testing.

8.2.3.4 Undervoltage Lockout Set Point

The undervoltage lockout (UVLO) set point can be adjusted using the external-voltage divider network of R4 and R5. The R4 resistor is connected between the VIN and EN pins of the TPS54302 device. The R5 resistor is connected between the EN and GND pins. The UVLO has two thresholds, one for power up when the input voltage is rising and one for power down or brownouts when the input voltage is falling. For the example design, the minimum input voltage is 8 V, so the start voltage threshold is set to 6.74 V and the stop voltage threshold is set to 5.83 V. Use Equation 1 and Equation 2 to calculate the values for the upper and lower resistor values of R4 and R5.

8.2.3.5 Output Filter Components

Two components must be selected for the output filter: the output inductor (L_O) and C_O.

8.2.3.5.1 Inductor Selection

Use Equation 8 to calculate the minimum value of the output inductor (L_{MIN}).

$$L_{MIN} = \frac{V_{OUT} \times \left(V_{IN(MAX)} - V_{OUT}\right)}{V_{IN(MAX)} \times K_{IND} \times I_{OUT} \times f_{sw}} \tag{8}$$

where

- K_{IND} is a coefficient that represents the amount of inductor ripple current relative to the maximum output current.

In general, the value of K_{IND} is at the discretion of the designer; however, the following guidelines may be used. For designs using low-ESR output capacitors, such as ceramics, a higher K_{IND} can be used. When using higher ESR output capacitors, K_{IND} = 0.2 yields better results.

For this design example, use K_{IND} = 0.35. The minimum inductor value is calculated as 9.78 µH. For this design, a close standard value of 10 µH was selected for L_{MIN}.

For the output filter inductor, the RMS current and saturation current ratings must not be exceeded. Use Equation 9 to calculate the RMS inductor current ($I_{L(RMS)}$).

$$I_{L(MAX)} = \sqrt{I_{OUT(MAX)}^2 + \frac{1}{12} \times \left(\frac{V_{OUT} \times \left(V_{IN(MAX)} - V_{OUT}\right)}{V_{IN(MAX)} \times L_O \times f_{SW} \times 0.8}\right)^2} \tag{9}$$

Use Equation 10 to calculate the peak inductor current ($I_{L(PK)}$).

$$I_{L(PK)} = I_{OUT(MAX)} + \frac{V_{OUT} \times \left(V_{IN(MAX)} - V_{OUT}\right)}{1.6 \times V_{IN(MAX)} \times L_O \times f_{SW}} \tag{10}$$

Smaller or larger inductor values can be used depending on the amount of ripple current the designer wants to allow so long as the other design requirements are met. Larger value inductors have lower AC current and result in lower output voltage ripple. Smaller inductor values increase AC current and output voltage ripple.

8.2.3.5.2 Output Capacitor Selection

Consider three primary factors when selecting the value of the output capacitor. The output capacitor determines the modulator pole, the output voltage ripple, and how the regulator responds to a large change in load current. The output capacitance must be selected based on the more stringent of these three criteria.

The desired response to a large change in the load current is the first criterion. The output capacitor must supply the load with current when the regulator cannot. This situation occurs if the desired hold-up times are present for

Copyright © 2021 Texas Instruments Incorporated

the regulator. In this case, the output capacitor must hold the output voltage above a certain level for a specified amount of time after the input power is removed. The regulator is also temporarily unable to supply sufficient output current if a large, fast increase occurs affecting the current requirements of the load, such as a transition from no load to full load. The regulator usually requires two or more clock cycles for the control loop to notice the change in load current and output voltage and to adjust the duty cycle to react to the change. The output capacitor must be sized to supply the extra current to the load until the control loop responds to the load change. The output capacitance must be large enough to supply the difference in current for 2 clock cycles while only allowing a tolerable amount of drop in the output voltage. Use Equation 11 to calculate the minimum required output capacitance.

$$C_O > \frac{2 \times \Delta I_{OUT}}{f_{sw} \times \Delta V_{OUT}} \tag{11}$$

where

- ΔI_{OUT} is the change in output current.
- f_{SW} is the switching frequency of the regulator.
- ΔV_{OUT}b is the allowable change in the output voltage.

For this example, the transient load response is specified as a 5% change in the output voltage, V_{OUT}, for a load step of 1.5 A. For this example, ΔI_{OUT} = 1.5 A and ΔV_{OUT} = 0.05 × 5 = 0.25 V. Using these values results in a minimum capacitance of 30 µF. This value does not consider the ESR of the output capacitor in the output voltage change. For ceramic capacitors, the ESR is usually small enough to ignore in this calculation.

Use Equation 12 to calculate the minimum output capacitance required to meet the output voltage ripple specification. In this case, the maximum output voltage ripple is 30 mV. Under this requirement, Equation 12 yields 10.7 µF.

$$C_O > \frac{1}{8 \times f_{SW}} \times \frac{1}{\frac{V_{OUTripple}}{I_{ripple}}} \tag{12}$$

where

- f_{SW} is the switching frequency.
- $V_{OUTripple}$ is the maximum allowable output voltage ripple.
- I_{ripple} is the inductor ripple current

Use Equation 13 to calculate the maximum ESR an output capacitor can have to meet the output-voltage ripple specification. Equation 13 indicates the ESR should be less than 29.2 mΩ. In this case, the ESR of the ceramic capacitor is much smaller than 29.2 mΩ.

$$R_{ESR} < \frac{V_{OUTripple}}{I_{ripple}} \tag{13}$$

The output capacitor can affect the crossover frequency f_o. Considering the loop stability and effect of the internal parasitic parameters, choose the crossover frequency less than 40 kHz without considering the feed forward capacitor. A simple estimation for the crossover frequency without feed forward capacitor C6 is shown in Equation 14, assuming C_O has small ESR.

$$f_o = \frac{5.1}{V_{OUT} \times C_O} \tag{14}$$

Additional capacitance deratings for aging, temperature, and DC bias should be considered which increases this minimum value. For this example, two 22-uF 25-V, X7R ceramic capacitors are used. Capacitors generally have limits to the amount of ripple current they can handle without failing or producing excess heat. An output

capacitor that can support the inductor ripple current must be specified. Some capacitor data sheets specify the RMS value of the maximum ripple current. Use Equation 15 to calculate the RMS ripple current that the output capacitor must support. For this application, Equation 15 yields 296 mA for each capacitor.

$$I_{COUT(RMS)} = \frac{1}{\sqrt{12}} \times \left(\frac{V_{OUT} \times \left(V_{IN(MAX)} - V_{OUT} \right)}{V_{IN(MAX)} \times L_O \times f_{SW} \times N_C} \right) \tag{15}$$

8.2.3.5.3 Feedforward Capacitor

The TPS54302 device is internally compensated and the internal compensation network is composed of two capacitors and one resister shown on the *Section 7.2*. Depending on the V_{OUT}, if the output capacitor C_{OUT} is dominated by low ESR (ceramic types) capacitors, it could result in low phase margin. To improve the phase boost an external feedforward capacitor C6 can be added in parallel with R2. The C6 capacitor is chosen such that phase margin is boosted at the crossover frequency.

Equation 16 for C6 was tested.

$$C6 = \frac{1}{2\pi f_o} \times \frac{1}{R2} \tag{16}$$

For this design, C6 = 75 pF. The C6 capacitor is not needed when C_{OUT} has high ESR, and C6 calculated from Equation 16 should be reduced with medium ESR. Table 8-2 can be used as a starting point.

Table 8-2 lists some recommended component values.

Table 8-2. Recommended Component Values

V_{OUT} (V)	L (µH)	C_{OUT} (µF)	R2 (kΩ)	R3 (kΩ)	C8 (pF)
1.8	4.7	66	100	49.9	33
2.5	5.6	66	100	31.6	47
3.3	6.8	44	100	22.1	47
5	10	44	100	13.3	75
12	15	44	100	5.23	100

Copyright © 2021 Texas Instruments Incorporated

8.2.4 Application Curves

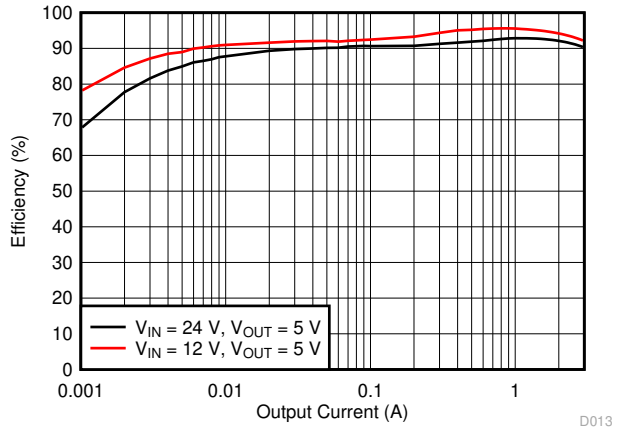

Figure 8-2. Efficiency

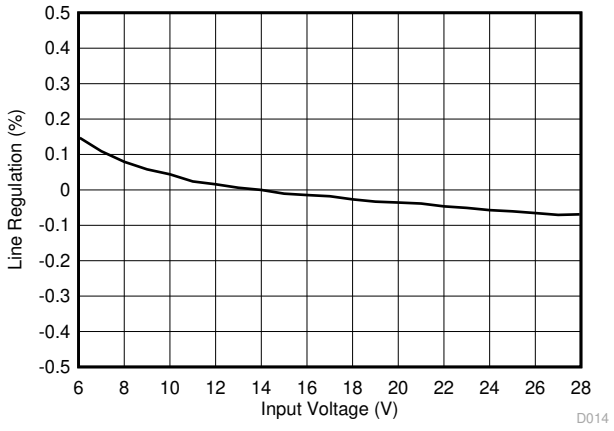

Figure 8-3. Line Regulation

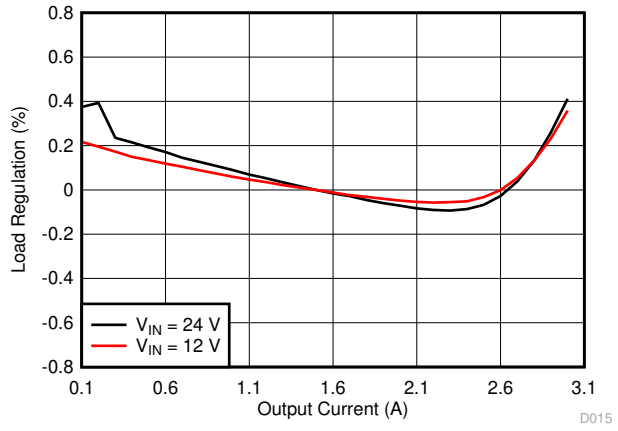

Figure 8-4. Load Regulation

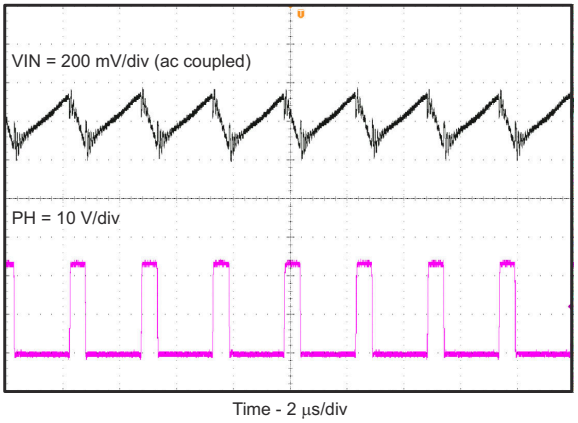

Figure 8-5. Input Voltage Ripple

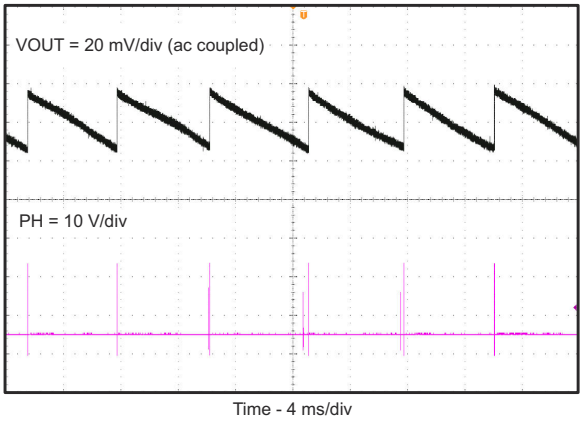

I_{OUT} = 0 A

Figure 8-6. Output Voltage Ripple

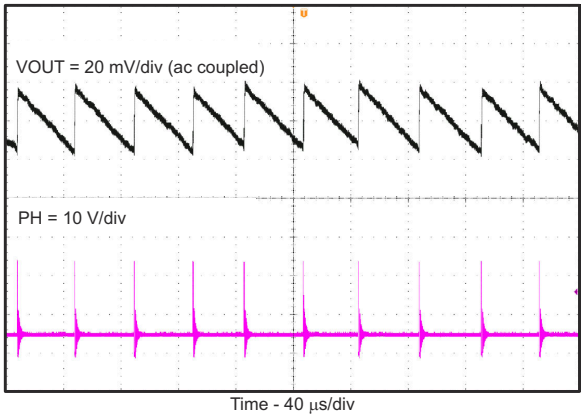

I_{OUT} = 10 mA

Figure 8-7. Output Voltage Ripple

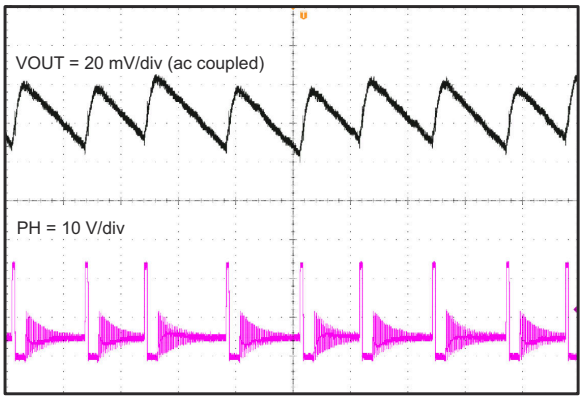

I_{OUT} = 100 mA

Figure 8-8. Output Voltage Ripple

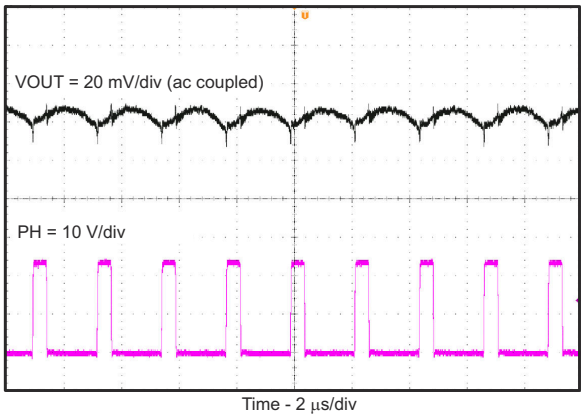

I_{OUT} = 1.5 A

Figure 8-9. Output Voltage Ripple

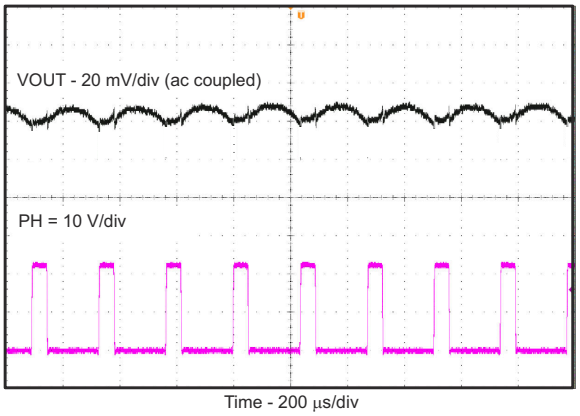

I_{OUT} = 3 A

Figure 8-10. Transient Response

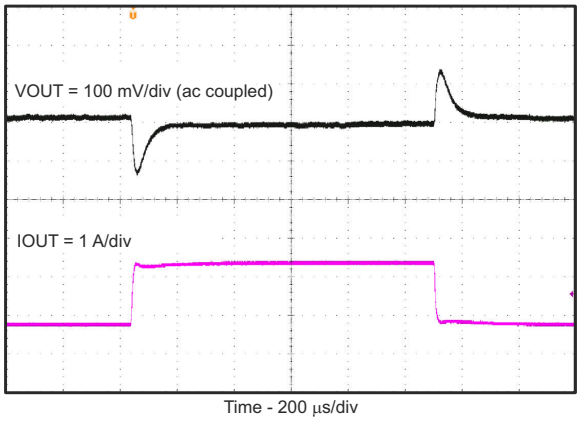

0.75 to 2.25-A load step

Slew rate = 250 mA/µs

Figure 8-11. Transient Response

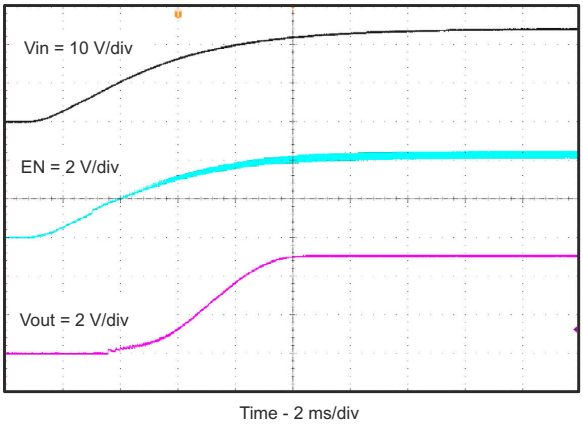

Figure 8-12. Start-Up Relative to VIN

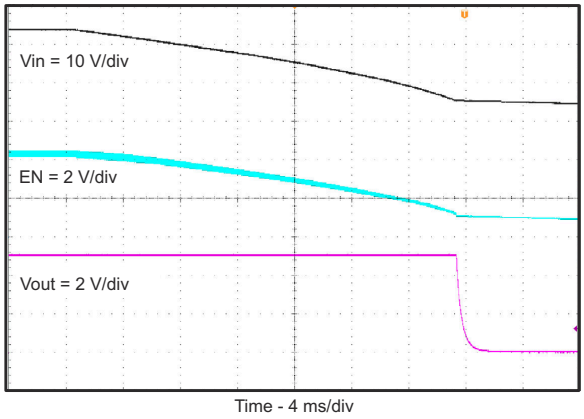

Figure 8-13. Shutdown Relative to VIN

Copyright © 2021 Texas Instruments Incorporated

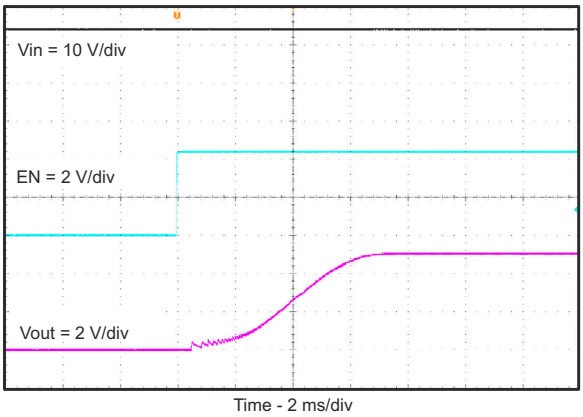

Figure 8-14. Start-Up Relative to EN

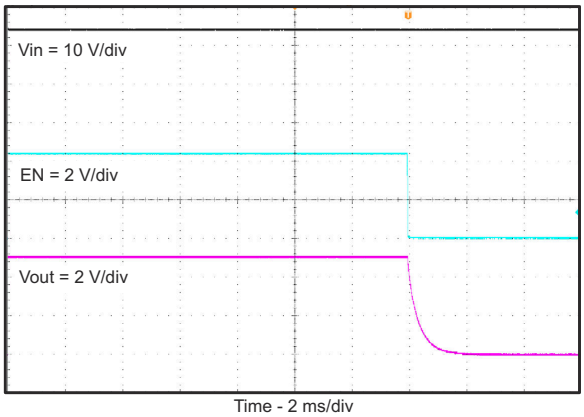

Figure 8-15. Shutdown Relative to EN

9 Power Supply Recommendations

The device is designed to operate from an input voltage supply range from 4.5 V to 28 V. This input supply must be well regulated. If the input supply is located more than a few inches from the device or converter, additional bulk capacitance may be required in addition to the ceramic bypass capacitors. An electrolytic capacitor with a value of 47 µF is a typical choice.

10 Layout

10.1 Layout Guidelines

Follow these layout guidelines:

- The VIN and GND traces should be as wide as possible to reduce trace impedance. The wide areas are also of advantage from the view point of heat dissipation.
- The input capacitor and output capacitor should be placed as close to the device as possible to minimize trace impedance.
- Provide sufficient vias for the input capacitor and output capacitor.
- Keep the SW trace as physically short and wide as practical to minimize radiated emissions.
- Do not allow switching current to flow under the device.
- A separate VOUT path should be connected to the upper feedback resistor.
- Make a Kelvin connection to the GND pin for the feedback path.
- The voltage feedback loop should be placed away from the high-voltage switching trace, and preferably has ground shield.
- The trace of the VFB node should be as small as possible to avoid noise coupling.
- The GND trace between the output capacitor and the GND pin should be as wide as possible to minimize its trace impedance.

10.2 Layout Example

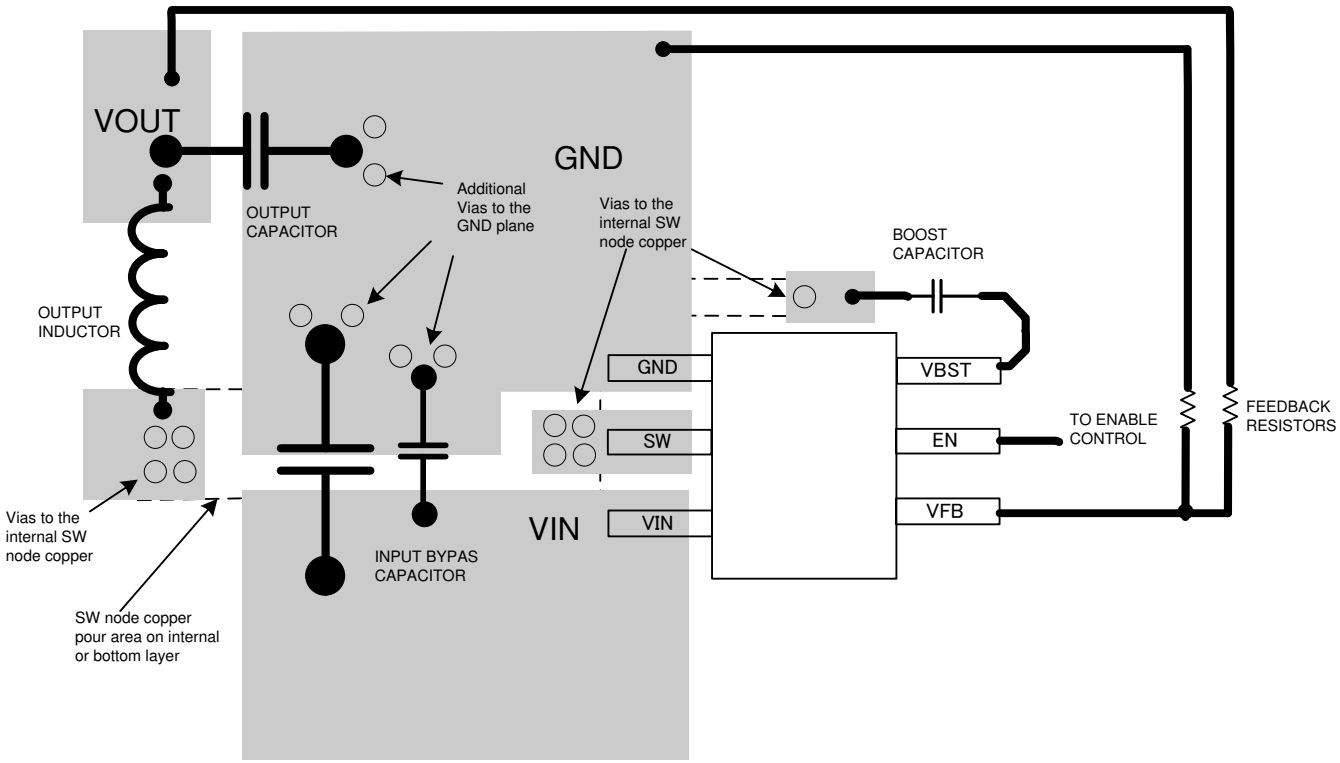

Figure 10-1. Board Layout

Copyright © 2021 Texas Instruments Incorporated

11 Device and Documentation Support

11.1 Device Support

11.1.1 Third-Party Products Disclaimer

TI'S PUBLICATION OF INFORMATION REGARDING THIRD-PARTY PRODUCTS OR SERVICES DOES NOT CONSTITUTE AN ENDORSEMENT REGARDING THE SUITABILITY OF SUCH PRODUCTS OR SERVICES OR A WARRANTY, REPRESENTATION OR ENDORSEMENT OF SUCH PRODUCTS OR SERVICES, EITHER ALONE OR IN COMBINATION WITH ANY TI PRODUCT OR SERVICE.

11.2 Receiving Notification of Documentation Updates

To receive notification of documentation updates, navigate to the device product folder on ti.com. Click on *Subscribe to updates* to register and receive a weekly digest of any product information that has changed. For change details, review the revision history included in any revised document.

11.3 Support Resources

TI E2E™ support forums are an engineer's go-to source for fast, verified answers and design help — straight from the experts. Search existing answers or ask your own question to get the quick design help you need.

Linked content is provided "AS IS" by the respective contributors. They do not constitute TI specifications and do not necessarily reflect TI's views; see TI's Terms of Use.

11.4 Trademarks

Eco-mode™ and TI E2E™ are trademarks of Texas Instruments.
All trademarks are the property of their respective owners.

11.5 Electrostatic Discharge Caution

This integrated circuit can be damaged by ESD. Texas Instruments recommends that all integrated circuits be handled with appropriate precautions. Failure to observe proper handling and installation procedures can cause damage.

ESD damage can range from subtle performance degradation to complete device failure. Precision integrated circuits may be more susceptible to damage because very small parametric changes could cause the device not to meet its published specifications.

11.6 Glossary

TI Glossary	This glossary lists and explains terms, acronyms, and definitions.

12 Mechanical, Packaging, and Orderable Information

The following pages include mechanical, packaging, and orderable information. This information is the most current data available for the designated devices. This data is subject to change without notice and revision of this document. For browser-based versions of this data sheet, refer to the left-hand navigation.

PACKAGING INFORMATION

Orderable Device	Status (1)	Package Type	Package Drawing	Pins	Package Qty	Eco Plan (2)	Lead finish/ Ball material (6)	MSL Peak Temp (3)	Op Temp (°C)	Device Marking (4/5)	Samples
TPS54302DDCR	ACTIVE	SOT-23-THIN	DDC	6	3000	RoHS & Green	SN	Level-1-260C-UNLIM	-40 to 125	4302	Samples
TPS54302DDCT	ACTIVE	SOT-23-THIN	DDC	6	250	RoHS & Green	SN	Level-1-260C-UNLIM	-40 to 125	4302	Samples

(1) The marketing status values are defined as follows:
ACTIVE: Product device recommended for new designs.
LIFEBUY: TI has announced that the device will be discontinued, and a lifetime-buy period is in effect.
NRND: Not recommended for new designs. Device is in production to support existing customers, but TI does not recommend using this part in a new design.
PREVIEW: Device has been announced but is not in production. Samples may or may not be available.
OBSOLETE: TI has discontinued the production of the device.

(2) **RoHS:** TI defines "RoHS" to mean semiconductor products that are compliant with the current EU RoHS requirements for all 10 RoHS substances, including the requirement that RoHS substance do not exceed 0.1% by weight in homogeneous materials. Where designed to be soldered at high temperatures, "RoHS" products are suitable for use in specified lead-free processes. TI may reference these types of products as "Pb-Free".
RoHS Exempt: TI defines "RoHS Exempt" to mean products that contain lead but are compliant with EU RoHS pursuant to a specific EU RoHS exemption.
Green: TI defines "Green" to mean the content of Chlorine (Cl) and Bromine (Br) based flame retardants meet JS709B low halogen requirements of <=1000ppm threshold. Antimony trioxide based flame retardants must also meet the <=1000ppm threshold requirement.

(3) MSL, Peak Temp. - The Moisture Sensitivity Level rating according to the JEDEC industry standard classifications, and peak solder temperature.

(4) There may be additional marking, which relates to the logo, the lot trace code information, or the environmental category on the device.

(5) Multiple Device Markings will be inside parentheses. Only one Device Marking contained in parentheses and separated by a "~" will appear on a device. If a line is indented then it is a continuation of the previous line and the two combined represent the entire Device Marking for that device.

(6) Lead finish/Ball material - Orderable Devices may have multiple material finish options. Finish options are separated by a vertical ruled line. Lead finish/Ball material values may wrap to two lines if the finish value exceeds the maximum column width.

Important Information and Disclaimer: The information provided on this page represents TI's knowledge and belief as of the date that it is provided. TI bases its knowledge and belief on information provided by third parties, and makes no representation or warranty as to the accuracy of such information. Efforts are underway to better integrate information from third parties. TI has taken and continues to take reasonable steps to provide representative and accurate information but may not have conducted destructive testing or chemical analysis on incoming materials and chemicals. TI and TI suppliers consider certain information to be proprietary, and thus CAS numbers and other limited information may not be available for release.

In no event shall TI's liability arising out of such information exceed the total purchase price of the TI part(s) at issue in this document sold by TI to Customer on an annual basis.

TAPE AND REEL INFORMATION

REEL DIMENSIONS

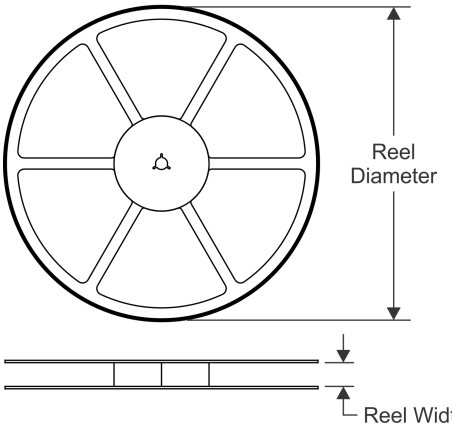

TAPE DIMENSIONS

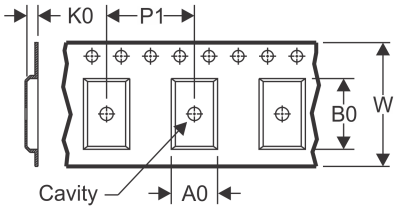

A0	Dimension designed to accommodate the component width
B0	Dimension designed to accommodate the component length
K0	Dimension designed to accommodate the component thickness
W	Overall width of the carrier tape
P1	Pitch between successive cavity centers

QUADRANT ASSIGNMENTS FOR PIN 1 ORIENTATION IN TAPE

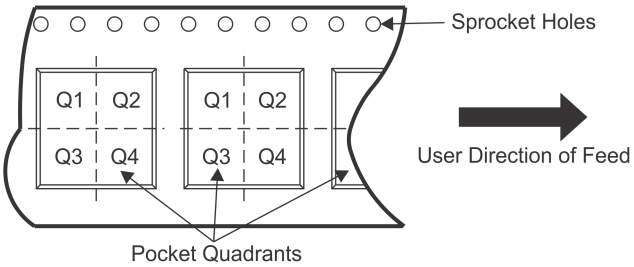

*All dimensions are nominal

Device	Package Type	Package Drawing	Pins	SPQ	Reel Diameter (mm)	Reel Width W1 (mm)	A0 (mm)	B0 (mm)	K0 (mm)	P1 (mm)	W (mm)	Pin1 Quadrant
TPS54302DDCR	SOT-23-THIN	DDC	6	3000	180.0	9.5	3.17	3.1	1.1	4.0	8.0	Q3
TPS54302DDCR	SOT-23-THIN	DDC	6	3000	180.0	9.5	3.17	3.1	1.1	4.0	8.0	Q3
TPS54302DDCT	SOT-23-THIN	DDC	6	250	180.0	9.5	3.17	3.1	1.1	4.0	8.0	Q3
TPS54302DDCT	SOT-23-THIN	DDC	6	250	180.0	9.5	3.17	3.1	1.1	4.0	8.0	Q3

TAPE AND REEL BOX DIMENSIONS

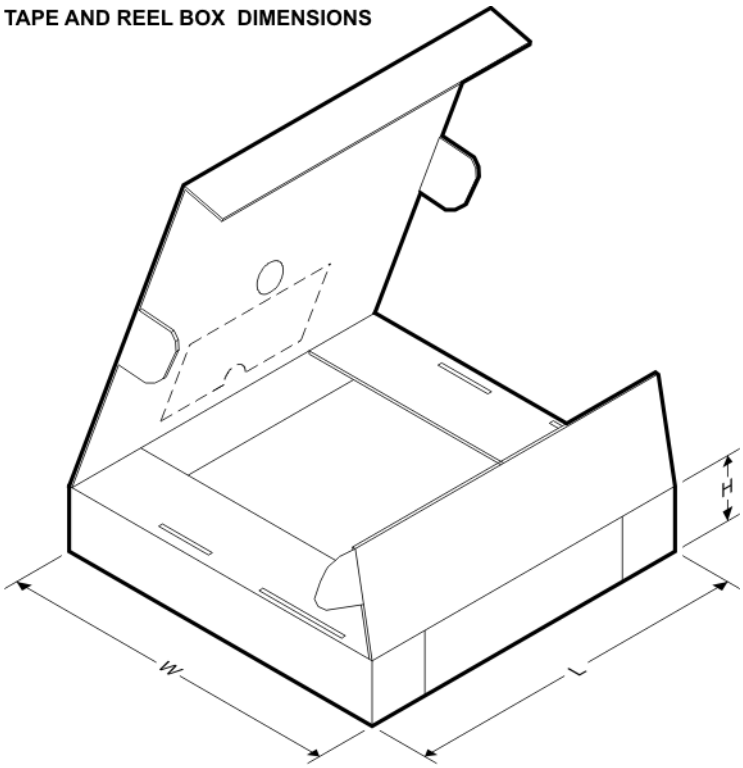

*All dimensions are nominal

Device	Package Type	Package Drawing	Pins	SPQ	Length (mm)	Width (mm)	Height (mm)
TPS54302DDCR	SOT-23-THIN	DDC	6	3000	184.0	184.0	19.0
TPS54302DDCR	SOT-23-THIN	DDC	6	3000	184.0	184.0	19.0
TPS54302DDCT	SOT-23-THIN	DDC	6	250	184.0	184.0	19.0
TPS54302DDCT	SOT-23-THIN	DDC	6	250	184.0	184.0	19.0

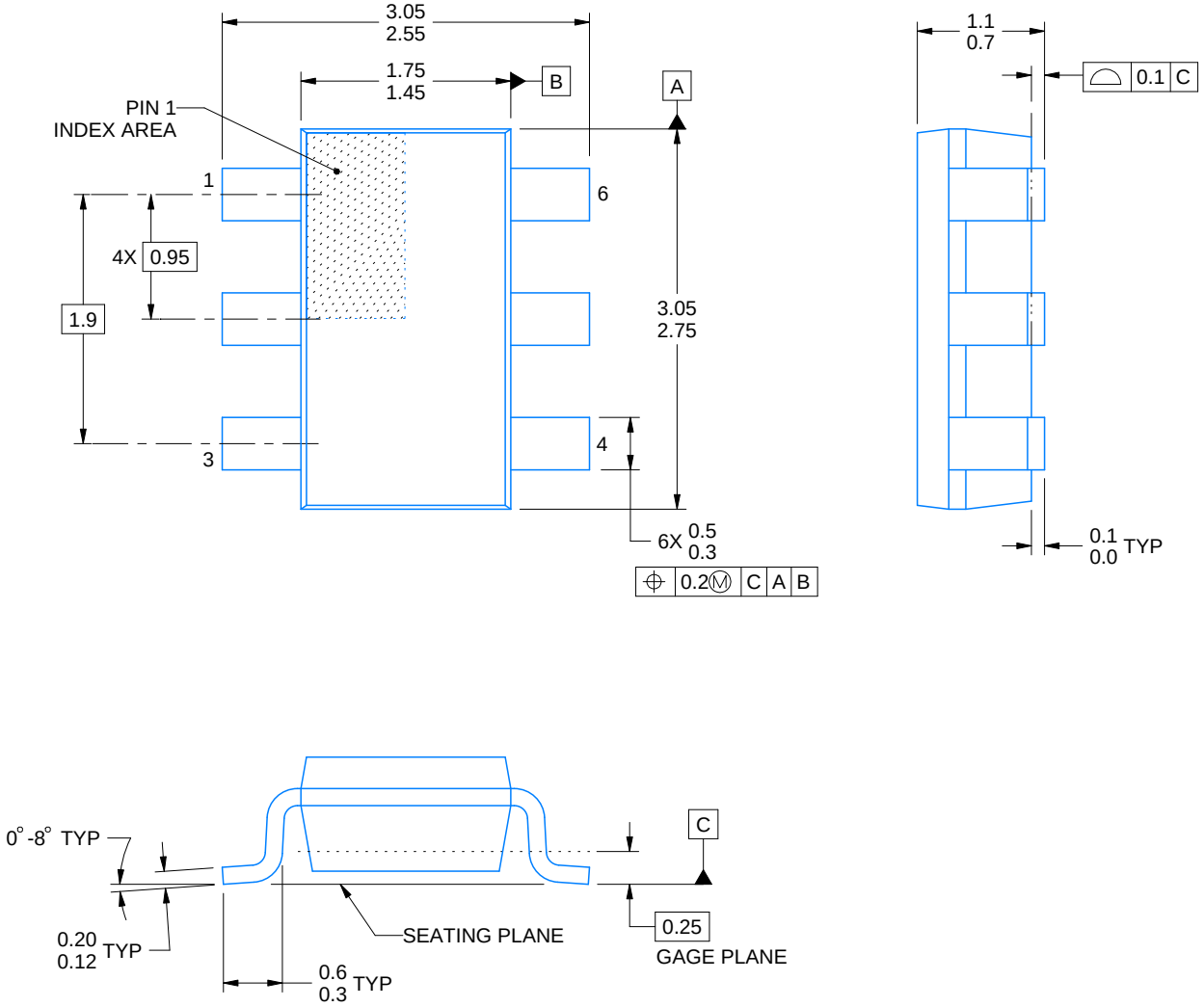

4214841/C 04/2022

NOTES:

1. All linear dimensions are in millimeters. Any dimensions in parenthesis are for reference only. Dimensioning and tolerancing per ASME Y14.5M.
2. This drawing is subject to change without notice.
3. Reference JEDEC MO-193.

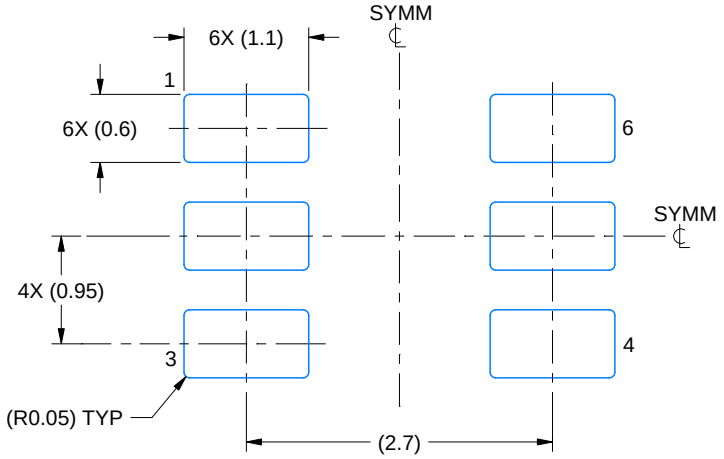

LAND PATTERN EXAMPLE
EXPLOSED METAL SHOWN
SCALE:15X

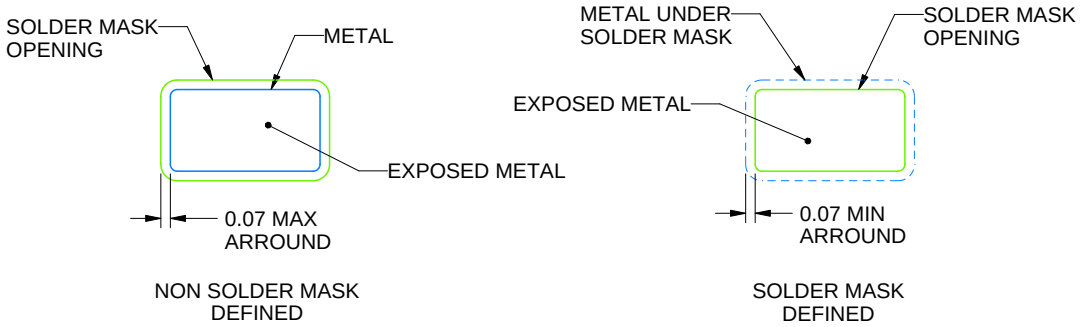

SOLDERMASK DETAILS

4214841/C 04/2022

NOTES: (continued)

4. Publication IPC-7351 may have alternate designs.
5. Solder mask tolerances between and around signal pads can vary based on board fabrication site.

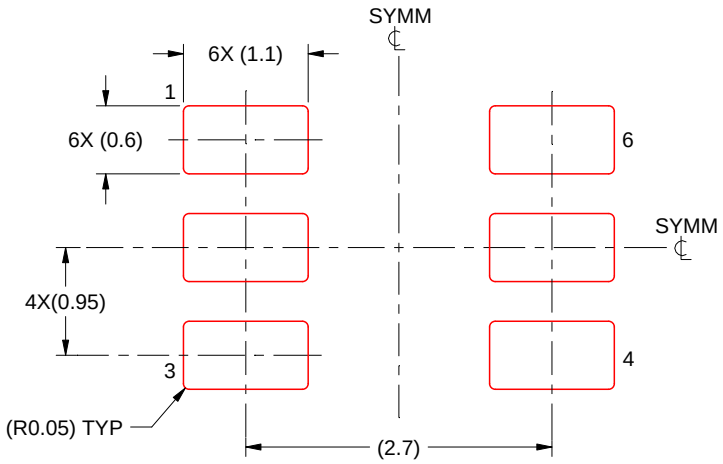

SOLDER PASTE EXAMPLE
BASED ON 0.125 THICK STENCIL
SCALE:15X

4214841/C 04/2022

NOTES: (continued)

6. Laser cutting apertures with trapezoidal walls and rounded corners may offer better paste release. IPC-7525 may have alternate design recommendations.
7. Board assembly site may have different recommendations for stencil design.

IMPORTANT NOTICE AND DISCLAIMER

TI PROVIDES TECHNICAL AND RELIABILITY DATA (INCLUDING DATA SHEETS), DESIGN RESOURCES (INCLUDING REFERENCE DESIGNS), APPLICATION OR OTHER DESIGN ADVICE, WEB TOOLS, SAFETY INFORMATION, AND OTHER RESOURCES “AS IS” AND WITH ALL FAULTS, AND DISCLAIMS ALL WARRANTIES, EXPRESS AND IMPLIED, INCLUDING WITHOUT LIMITATION ANY IMPLIED WARRANTIES OF MERCHANTABILITY, FITNESS FOR A PARTICULAR PURPOSE OR NON-INFRINGEMENT OF THIRD PARTY INTELLECTUAL PROPERTY RIGHTS.

These resources are intended for skilled developers designing with TI products. You are solely responsible for (1) selecting the appropriate TI products for your application, (2) designing, validating and testing your application, and (3) ensuring your application meets applicable standards, and any other safety, security, regulatory or other requirements.

These resources are subject to change without notice. TI grants you permission to use these resources only for development of an application that uses the TI products described in the resource. Other reproduction and display of these resources is prohibited. No license is granted to any other TI intellectual property right or to any third party intellectual property right. TI disclaims responsibility for, and you will fully indemnify TI and its representatives against, any claims, damages, costs, losses, and liabilities arising out of your use of these resources.

TI’s products are provided subject to TI’s Terms of Sale or other applicable terms available either on ti.com or provided in conjunction with such TI products. TI’s provision of these resources does not expand or otherwise alter TI’s applicable warranties or warranty disclaimers for TI products.

TI objects to and rejects any additional or different terms you may have proposed.

Mailing Address: Texas Instruments, Post Office Box 655303, Dallas, Texas 75265
Copyright © 2022, Texas Instruments Incorporated