A 22 V, 13.1 mΩ, 5 A Load Switch with V_{IN} Lockout Select and MOSFET Current Monitor Output

General Description

The SLG59H1128V is a high-performance, self-powered 13.1 mΩ NMOS load switch designed for all 4.5 V to 22 V power rails up to 5 A. Using a proprietary MOSFET design, the SLG59H1128V achieves a stable 13.1 mΩ RDS_{ON} across a wide input voltage range. In combining novel FET design and copper pillar interconnects, the SLG59H1128V package also exhibits a low thermal resistance for high-current operation.

Designed to operate over a -40 °C to 85 °C range, the SLG59H1128V is available in a low thermal resistance, RoHS-compliant, 1.6 x 3.0 mm STQFN package.

Features

- Wide Operating Input Voltage: 4.5 V to 22 V
- Maximum Continuous Current: 5 A
- Automatic nFET SOA Protection
  - 10 W SOA Protection Threshold
- High-performance MOSFET Switch
  - Low RDS_{ON}: 13.1 mΩ at V_{IN} = 22 V
  - Low $\Delta RDS_{ON}/\Delta V_{IN}$: < 0.05 mΩ/V
  - Low $\Delta RDS_{ON}/\Delta T$: < 0.06 mΩ/°C
- 4-Level, Pin-selectable V_{IN} Overvoltage Lockout
- Capacitor-adjustable Inrush Current Control
- Two stage Current Limit Protection:
  - Resistor-adjustable Active Current Limit
  - Internal Short-circuit Current limit
- Open Drain $\overline{FAULT}$ Signaling
- Analog MOSFET Current Monitor Output : 10 µA/A
- Fast 4 kΩ Output Discharge
  - Pb-Free / Halogen-Free / RoHS Compliant Packaging

Pin Configuration

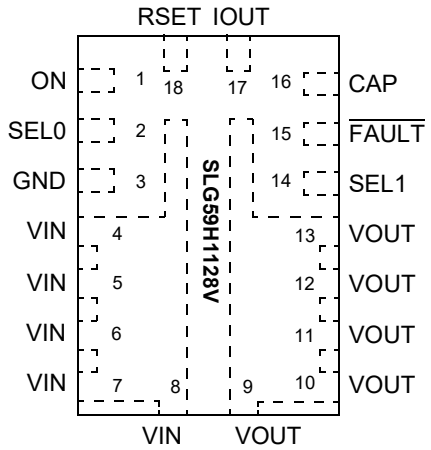

18-pin STQFN
1.6 x 3.0 mm, 0.40mm pitch
(Top View)

Applications

- Power-Rail Switching
- Multifunction Printers
- Large-format Copiers
- Telecommunications Equipment
- High-performance Computing
  - 5 V, 9 V, 12 V, and 20 V Point-of-Load Power Distribution
- Motor Drives

Block Diagram and a 20 V / 3 A Typical Application Circuit

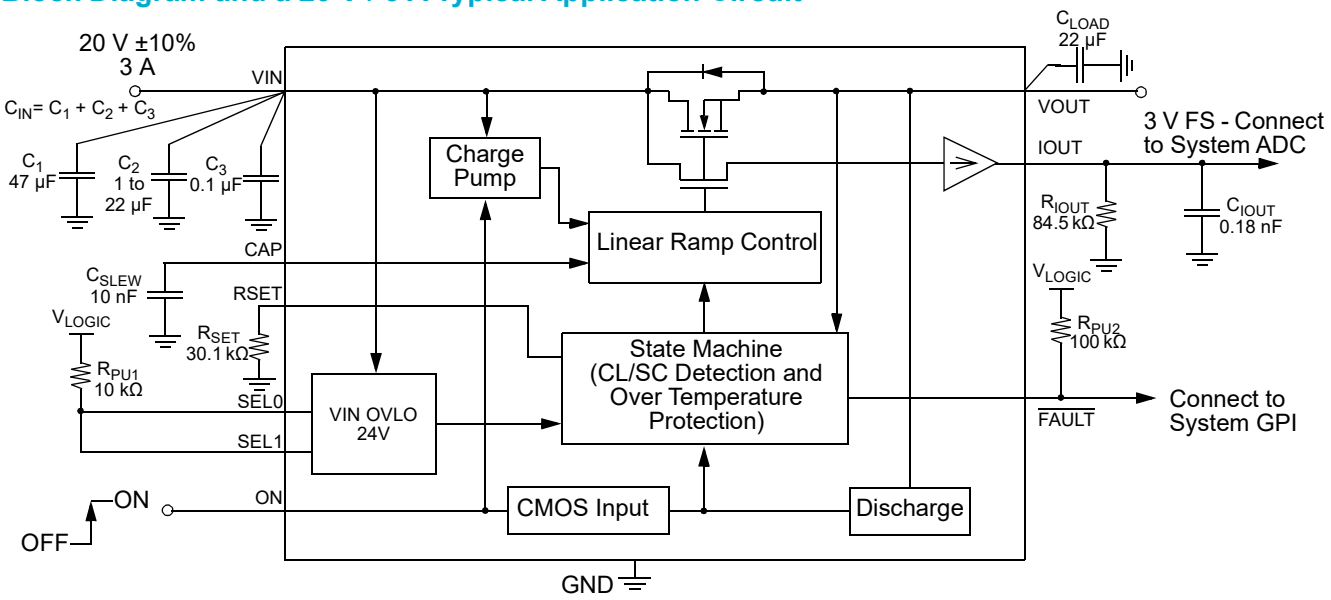

©2022 Renesas Electronics Corporation

Pin Description

Pin #	Pin Name	Type	Pin Description
1	ON	Input	A low-to-high transition on this pin initiates the operation of the SLG59H1128V's state machine. ON is an asserted HIGH, level-sensitive CMOS input with ON_V_{IL} < 0.3 V and ON_V_{IH} > 0.9 V. As the ON pin input circuit does not have an internal pull-down resistor, connect this pin to a general-purpose output (GPO) of a microcontroller, an application processor, or a system controller, do not allow this pin to be open-circuited.
2	SEL0	Input	As level-sensitive, CMOS inputs with V_{IL} < 0.3 V and V_{IH} > 1.65 V, the SEL0 (LSB) and the SEL1 (MSB) pins select one of four V_{IN} overvoltage lockout thresholds. Please see the Applications Section for additional information and the Electrical Characteristics table for the V_{IN} overvoltage thresholds. A logic LOW on either pin is achieved by connecting the pin of interest to GND; a logic HIGH on either pin is achieved by connecting a 10 kΩ external resistor from the pin in question to the system's local logic supply.
3	GND	GND	Pin 3 is the main ground connection for the SLG59H1128V's internal charge pump, its gate driver and current-limit circuits as well as its internal state machine. Therefore, use a short, stout connection from Pin 3 to the system's analog or power plane.
4-8	VIN	MOSFET	VIN supplies the power for the operation of the SLG59H1128V, its internal control circuitry, and the drain terminal of the nFET load switch. With 5 pins fused together at VIN, connect a 47 µF (or larger) low-ESR capacitor from this pin to ground. Capacitors used at VIN should be rated at 50 V or higher.
9-13	VOUT	MOSFET	Source terminal of n-channel MOSFET (5 pins fused for VOUT). Connect a 22 µF (or larger) low-ESR capacitor from this pin to ground. Capacitors used at VOUT should be rated at 50 V or higher.
14	SEL1	Input	Please see SEL0 Pin Description above
15	$\overline{FAULT}$	Output	An open drain output, $\overline{FAULT}$ is asserted within $T\overline{FAULT}_{LOW}$ when a V_{IN} overvoltage, a current-limit, or an over-temperature condition is detected. $\overline{FAULT}$ is deasserted within $T\overline{FAULT}_{HIGH}$ when the fault condition is removed. Connect an 100 kΩ external resistor from the $\overline{FAULT}$ pin to local system logic supply.
16	CAP	Output	A low-ESR, stable dielectric, ceramic surface-mount capacitor connected from CAP pin to GND sets the V_{OUT} slew rate and overall turn-on time of the SLG59H1128V. For best performance, the range for C_{SLEW} values are 10 nF ≤ C_{SLEW} ≤ 20 nF – please see typical characteristics for additional information. Capacitors used at the CAP pin should be rated at 10 V or higher. Please consult Applications Section on how to select C_{SLEW} based on V_{OUT} slew rate and loading conditions.
17	IOUT	Output	IOUT is the SLG59H1128V's power MOSFET load current monitor output. As an analog current output, this signal when applied to a ground-reference resistor generates a voltage proportional to the current through the n-channel MOSFET. The I_{OUT} transfer characteristic is typically 10 µA/A with a voltage compliance range of 0.5 V ≤ V_{IOUT} ≤ 4 V. Optimal I_{OUT} linearity is exhibited for 0.5 A ≤ I_{DS} ≤ 5 A. In addition, it is recommended to bypass the IOUT pin to GND with a 0.18 nF capacitor.
18	RSET	Input	A 1%-tolerance, metal-film resistor between 18 kΩ and 91 kΩ sets the SLG59H1128V's active current limit. A 91 kΩ resistor sets the SLG59H1128V's active current limit to 1 A and a 18 kΩ resistor sets the active current limit to 5 A.

Ordering Information

Part Number	Type	Production Flow
SLG59H1128V	STQFN 18L FC	Industrial, -40 °C to 85 °C
SLG59H1128VTR	STQFN 18L FC (Tape and Reel)	Industrial, -40 °C to 85 °C

©2022 Renesas Electronics Corporation

Absolute Maximum Ratings

Parameter	Description	Conditions	Min.	Typ.	Max.	Unit
V_{IN} to GND	Load Switch Input Voltage to GND	Continuous	-0.3	--	30	V
		Maximum pulsed V_{IN}, pulse width < 0.1 s	--	--	32	V
V_{OUT} to GND	Load Switch Output Voltage to GND		-0.3	--	V_{IN}	V
ON, SEL[1,0], CAP, RSET, IOUT, and $\overline{FAULT}$ to GND	ON, SEL[1,0], CAP, RSET, IOUT, and $\overline{FAULT}$ Pin Voltages to GND		-0.3	--	7	V
T_S	Storage Temperature		-65	--	150	°C
ESD_{HBM}	ESD Protection	Human Body Model	2000	--	--	V
ESD_{CDM}	ESD Protection	Charged Device Model	500	--	--	V
MSL	Moisture Sensitivity Level			1		
θ_{JA}	Package Thermal Resistance, Junction-to-Ambient	1.6 x 3.0 mm 18L STQFN; Determined with the device mounted onto a 1 in^2, 1 oz. copper pad of FR-4 material	--	40	--	°C/W
MOSFET IDS_{CONT}	Continuous Current from VIN to VOUT	T_J < 150 °C	--	--	5	A
MOSFET IDS_{PEAK}	Peak Current from VIN to VOUT	Maximum pulsed switch current, pulse width < 1 ms	--	--	6	A

Note: Stresses greater than those listed under "Absolute Maximum Ratings" may cause permanent damage to the device. This is a stress rating only and functional operation of the device at these or any other conditions above those indicated in the operational sections of this specification is not implied. Exposure to absolute maximum rating conditions for extended periods may affect reliability.

Electrical Characteristics

4.5 V ≤ V_{IN} ≤ 22 V; C_{IN} = 47 µF, T_A = -40 °C to 85 °C, unless otherwise noted. Typical values are at T_A = 25 °C

Parameter	Description	Conditions	Min.	Typ.	Max.	Unit
V_{IN}	Operating Input Voltage		4.5	--	22	V
$V_{IN(OVLO)}$	V_{IN} Overvoltage Lockout Threshold	V_{IN} ↑; SEL[1,0] = [0,0]	5.6	6	6.3	V
		V_{IN} ↑; SEL[1,0] = [0,1]	10	10.8	11.4	V
		V_{IN} ↑; SEL[1,0] = [1,0]	13.5	14.4	15.2	V
		V_{IN} ↑; SEL[1,0] = [1,1]	22.6	24	25.2	V
$V_{IN(OVLOHYST)}$	V_{IN} Overvoltage Lockout Hysteresis		--	2	--	%
$V_{IN(UVLO)}$	V_{IN} Undervoltage Lockout Threshold	V_{IN} ↓	--	3	--	V
I_Q	Quiescent Supply Current	ON = HIGH; I_{DS} = 0 A	--	0.5	0.6	mA
I_{SHDN}	OFF Mode Supply Current	ON = LOW; I_{DS} = 0 A	--	1	3	µA
RDS_{ON}	ON Resistance	T_A = 25 °C; I_{DS} = 0.1 A	--	13.1	14	mΩ
		T_A = 85 °C; I_{DS} = 0.1 A	--	16.8	19	mΩ
MOSFET IDS	Current from VIN to VOUT	Continuous	--	--	5	A
I_{LIMIT}	Active Current Limit, I_{ACL}	V_{OUT} > 0.5 V; R_{SET} = 30.1 kΩ	2.8	3.2	3.6	A
	Short-circuit Current Limit, I_{SCL}	V_{OUT} < 0.5 V	--	0.5	--	A
T_{ACL}	Active Current Limit Response Time		--	120	--	µs

©2022 Renesas Electronics Corporation

Electrical Characteristics (continued)

4.5 V ≤ V_{IN} ≤ 22 V; C_{IN} = 47 µF, T_A = -40 °C to 85 °C, unless otherwise noted. Typical values are at T_A = 25 °C

Parameter	Description	Conditions	Min.	Typ.	Max.	Unit
$R_{DISCHRG}$	Output Discharge Resistance		3.5	4.4	5.3	kΩ
I_{OUT}	MOSFET Current Analog Monitor Output	I_{DS} = 1 A	9.3	10	11	µA
		I_{DS} = 3 A	28.5	30	31.5	µA
T_{IOUT}	I_{OUT} Response Time to Change in Main MOSFET Current	C_{IOUT} = 180 pF; Step load 0 to 2.4 A; 0% to 90% I_{OUT}	--	45	--	µs
C_{LOAD}	Output Load Capacitance	C_{LOAD} connected from VOUT to GND	--	22	--	µF
T_{ON_Delay}	ON Delay Time	50% ON to 10% V_{OUT} ↑; V_{IN} = 4.5 V; C_{SLEW} = 10 nF; R_{LOAD} = 100 Ω, C_{LOAD} = 10 µF	--	0.3	0.5	ms
		50% ON to 10% V_{OUT} ↑; V_{IN} = 22 V; C_{SLEW} = 10 nF; R_{LOAD} = 100 Ω, C_{LOAD} = 10µF	--	0.7	1.2	ms
T_{Total_ON}	Total Turn On Time	50% ON to 90% V_{OUT} ↑	Set by External C_{SLEW}[1]			ms
		50% ON to 90% V_{OUT} ↑; V_{IN} = 4.5 V; C_{SLEW} = 10 nF; R_{LOAD} = 100 Ω, C_{LOAD} = 10 µF	--	1.4	2.1	ms
		50% ON to 90% V_{OUT} ↑; V_{IN} = 22 V; C_{SLEW} = 10 nF; R_{LOAD} = 100 Ω, C_{LOAD} = 10 µF	--	5	8	ms
$V_{OUT(SR)}$	V_{OUT} Slew Rate	10% V_{OUT} to 90% V_{OUT} ↑	Set by External C_{SLEW}[1]			V/ms
		10% V_{OUT} to 90% V_{OUT} ↑; V_{IN} = 4.5 V to 22 V; C_{SLEW} = 10 nF; R_{LOAD} = 100 Ω, C_{LOAD} = 10 µF	2.7	3.2	3.9	V/ms
T_{OFF_Delay}	OFF Delay Time	50% ON to V_{OUT} Fall Start ↓; V_{IN} = 4.5 V to 22 V R_{LOAD} = 100 Ω, No C_{LOAD}	--	18	--	µs
T_{FALL}	V_{OUT} Fall Time	90% V_{OUT} to 10% V_{OUT}; ON = HIGH-to-LOW; V_{IN} = 4.5 V to 22 V; R_{LOAD} = 100 Ω, No C_{LOAD}	10.4	14	21	µs
$T\overline{FAULT}_{LOW}$	$\overline{FAULT}$ Assertion Time	Abnormal Step Load Current event to $\overline{FAULT}$↓; I_{ACL} = 1 A; V_{IN} = 22 V; R_{SET} = 91 kΩ; switch in 20 Ω load	--	80	--	µs
$T\overline{FAULT}_{HIGH}$	$\overline{FAULT}$ De-assertion Time	Delay to $\overline{FAULT}$↑ after fault condition is removed; I_{ACL} = 1 A; V_{IN} = 22 V; R_{SET} = 91 kΩ; switch out 20 Ω load	--	180	--	µs
$\overline{FAULT}_{VOL}$	$\overline{FAULT}$ Output Low Voltage	$I_{\overline{FAULT}}$ = 1 mA	--	0.2	--	V
ON_V_{IH}	ON Pin Input High Voltage		0.9	--	5	V
ON_V_{IL}	ON Pin Input Low Voltage		-0.3	0	0.3	V
$SEL[1,0]_V_{IH}$	SEL[1,0] pins Input High Voltage		1.65	--	4.5	V
$SEL[1,0]_V_{IL}$	SEL[1,0] pins Input Low Voltage		-0.3	--	0.3	V
$I_{ON(Leakage)}$	ON Pin Leakage Current	1 V ≤ ON ≤ 5 V or ON = GND	--	--	1	µA
$THERM_{ON}$	Thermal Protection Shutdown Threshold		--	145	--	°C
$THERM_{OFF}$	Thermal Protection Restart Threshold		--	120	--	°C

Notes:
1. Refer to typical Timing Parameter vs. C_{SLEW} performance charts for additional information when available.

©2022 Renesas Electronics Corporation

T_{Total_ON}, T_{ON_Delay} and Slew Rate Measurement

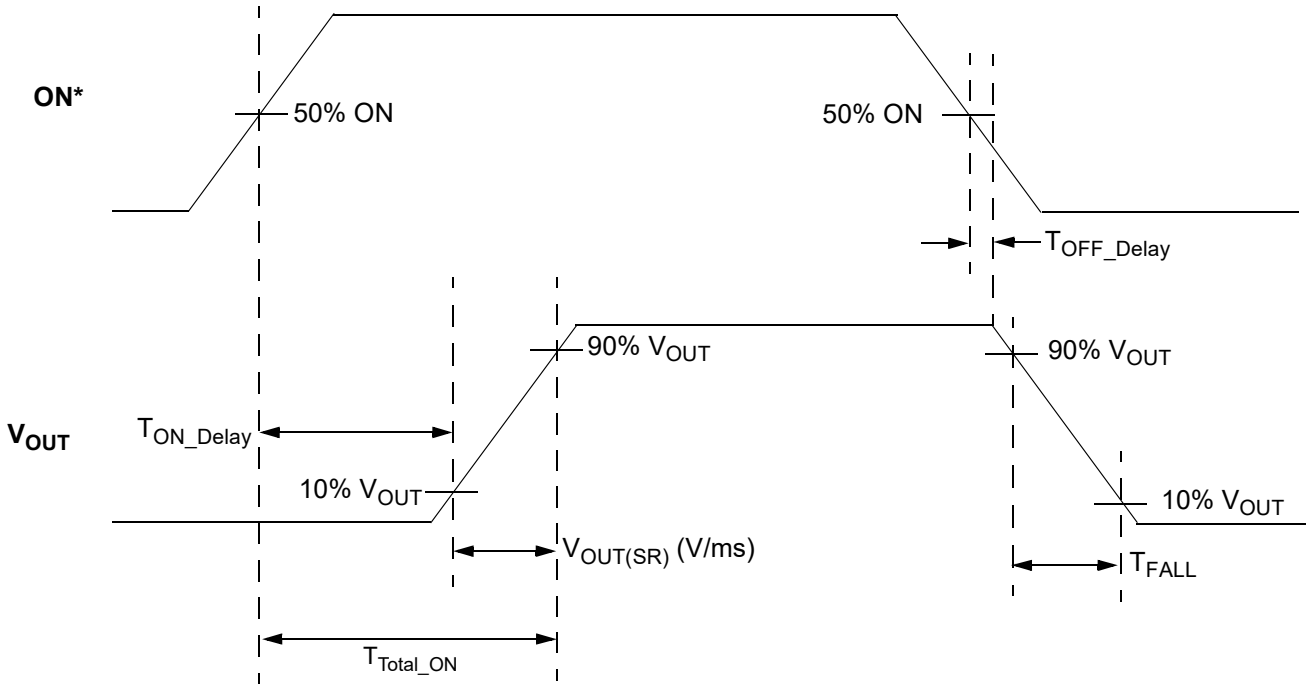

*Rise and Fall Times of the ON Signal are 100 ns

©2022 Renesas Electronics Corporation

Typical Performance Characteristics

RDS_{ON} vs. Temperature and V_{IN}

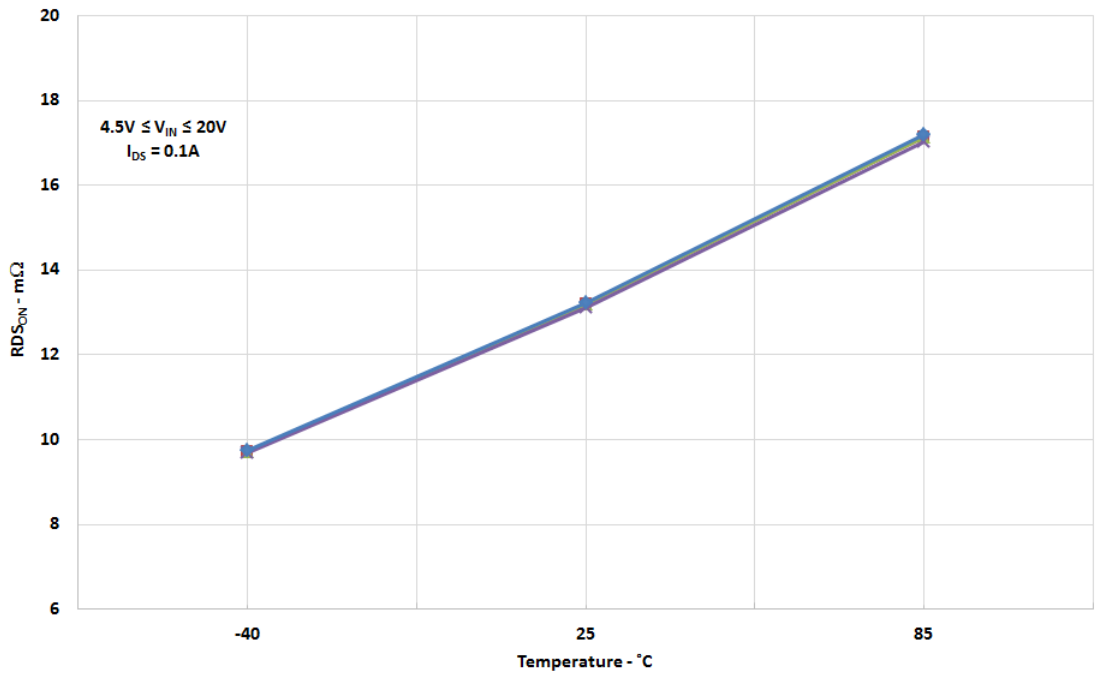

I_{ACL} vs. Temperature, R_{SET}, and V_{IN}

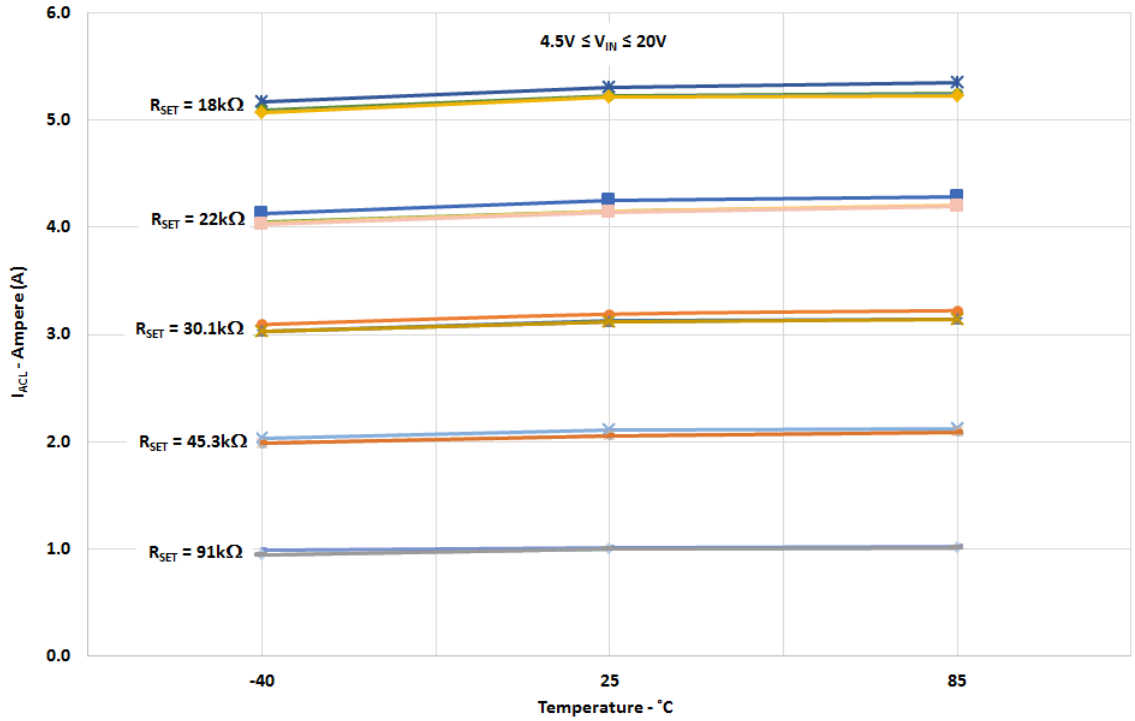

©2022 Renesas Electronics Corporation

I_{ACL} vs. R_{SET}, and V_{IN}

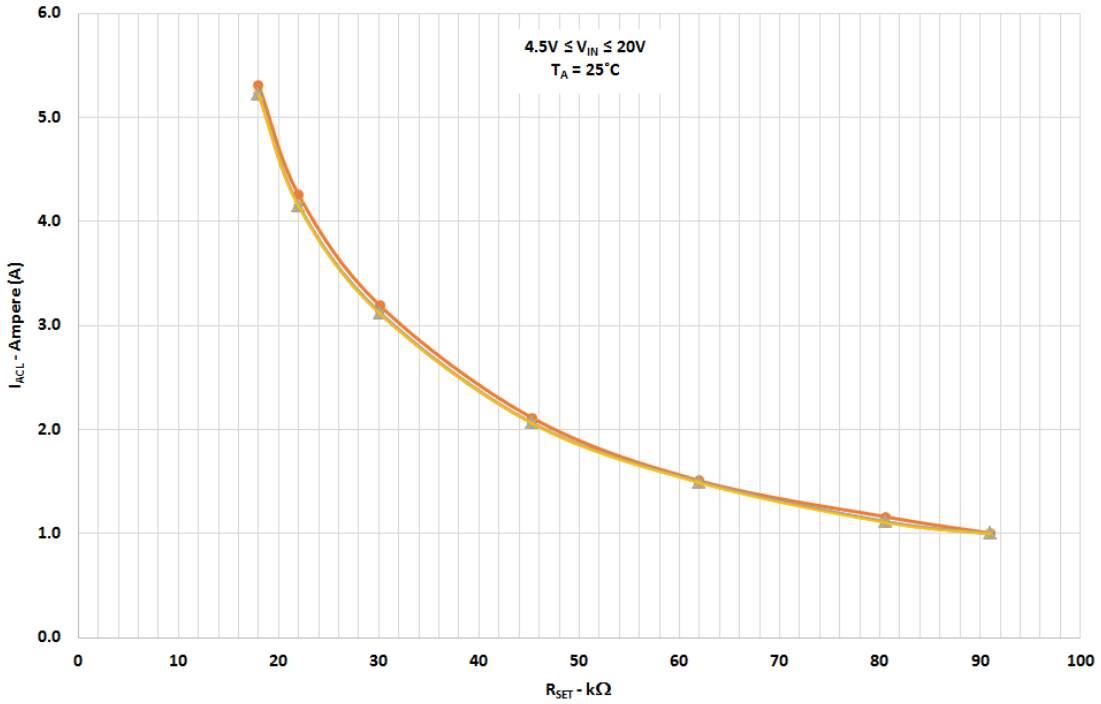

I_{OUT} vs. MOSFET IDS and V_{IN}

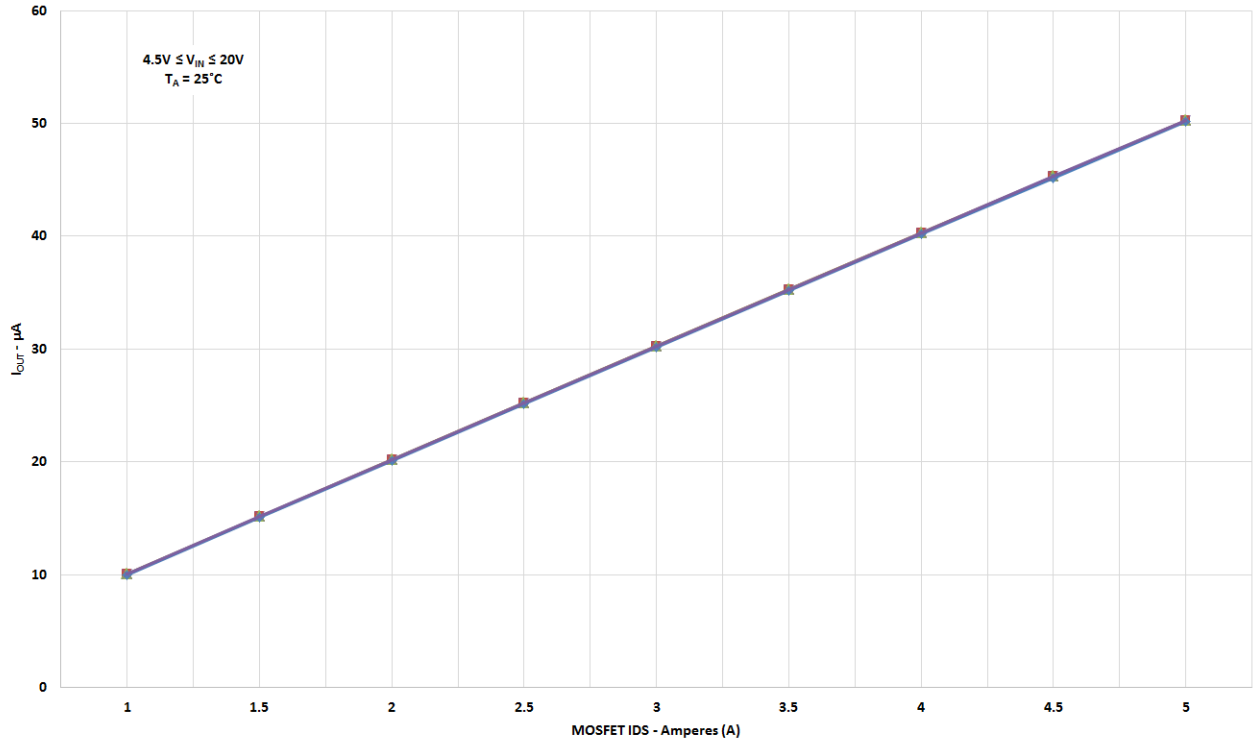

©2022 Renesas Electronics Corporation

I_{OUT} vs. Temperature, MOSFET IDS and V_{IN}

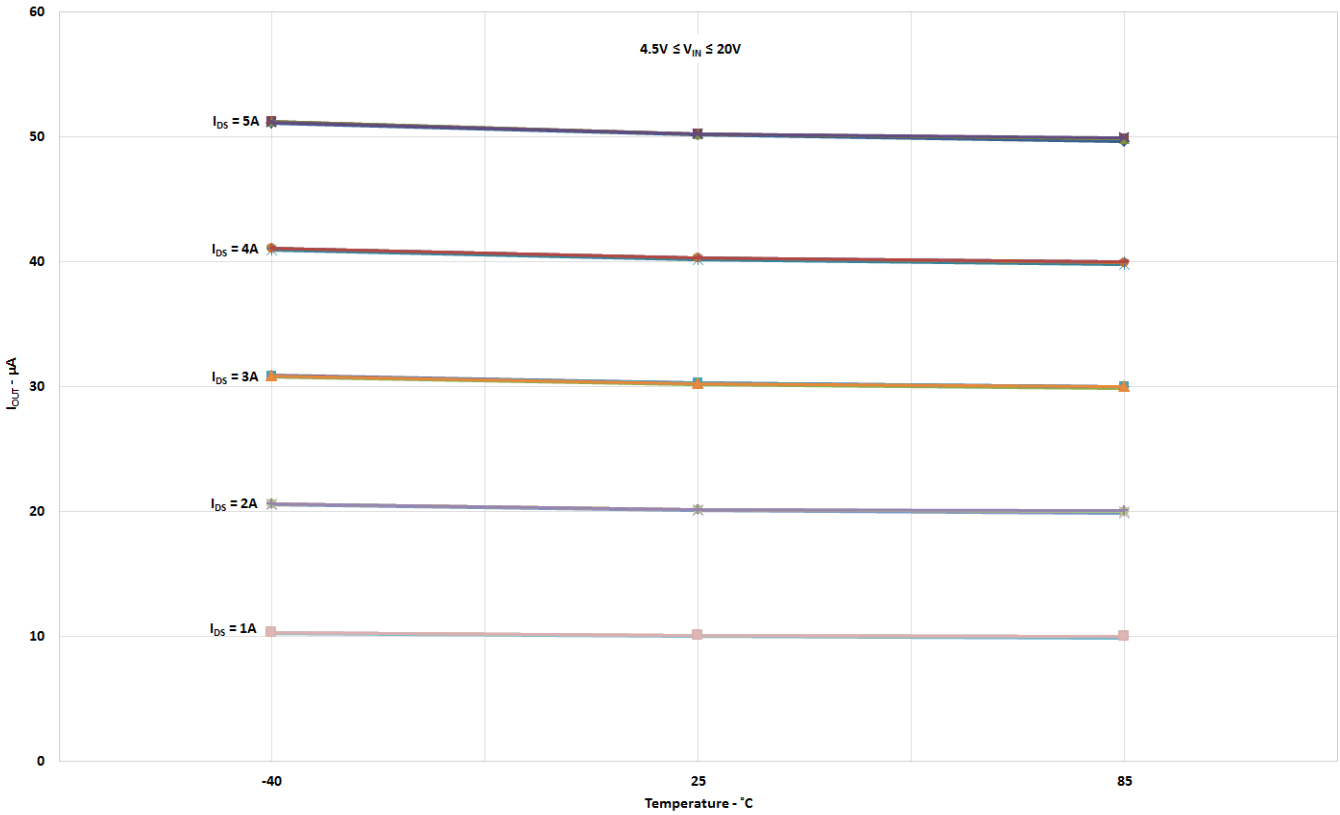

V_{OUT} Slew Rate vs. Temperature, V_{IN}, and C_{SLEW}

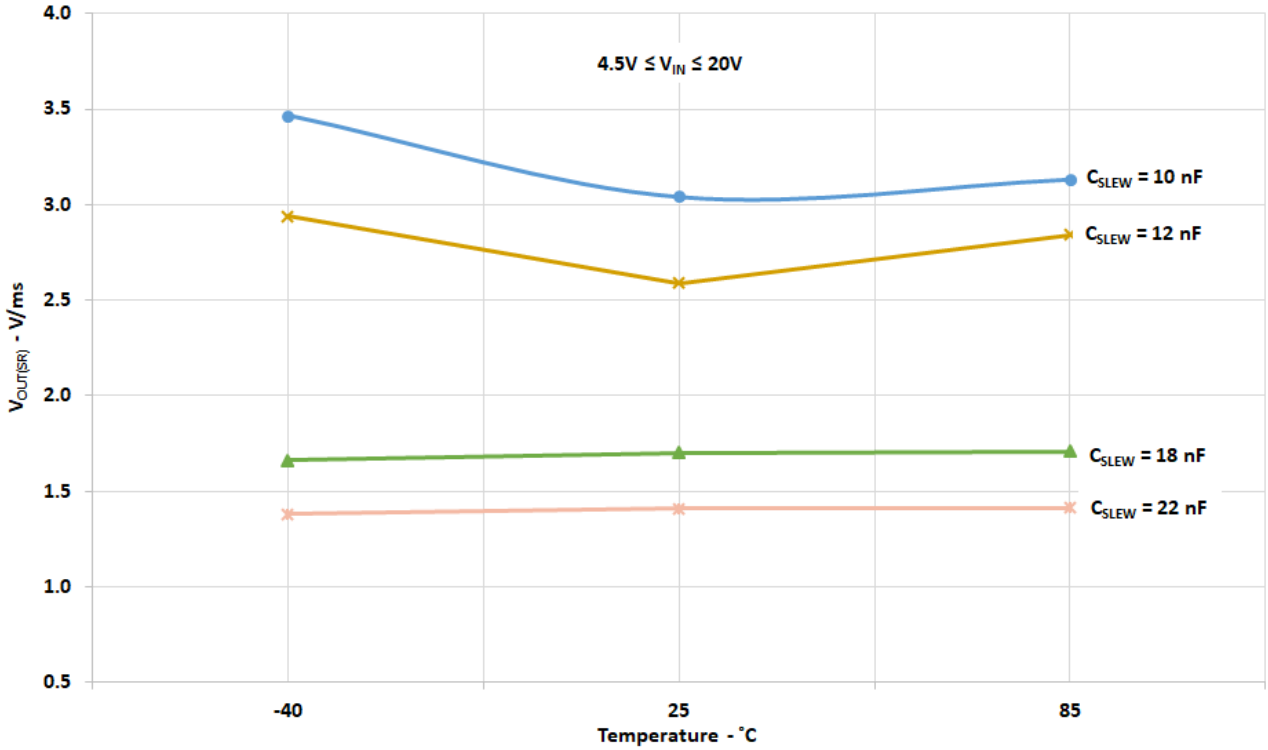

©2022 Renesas Electronics Corporation

T_{Total_ON} vs. C_{SLEW}, V_{IN}, and Temperature

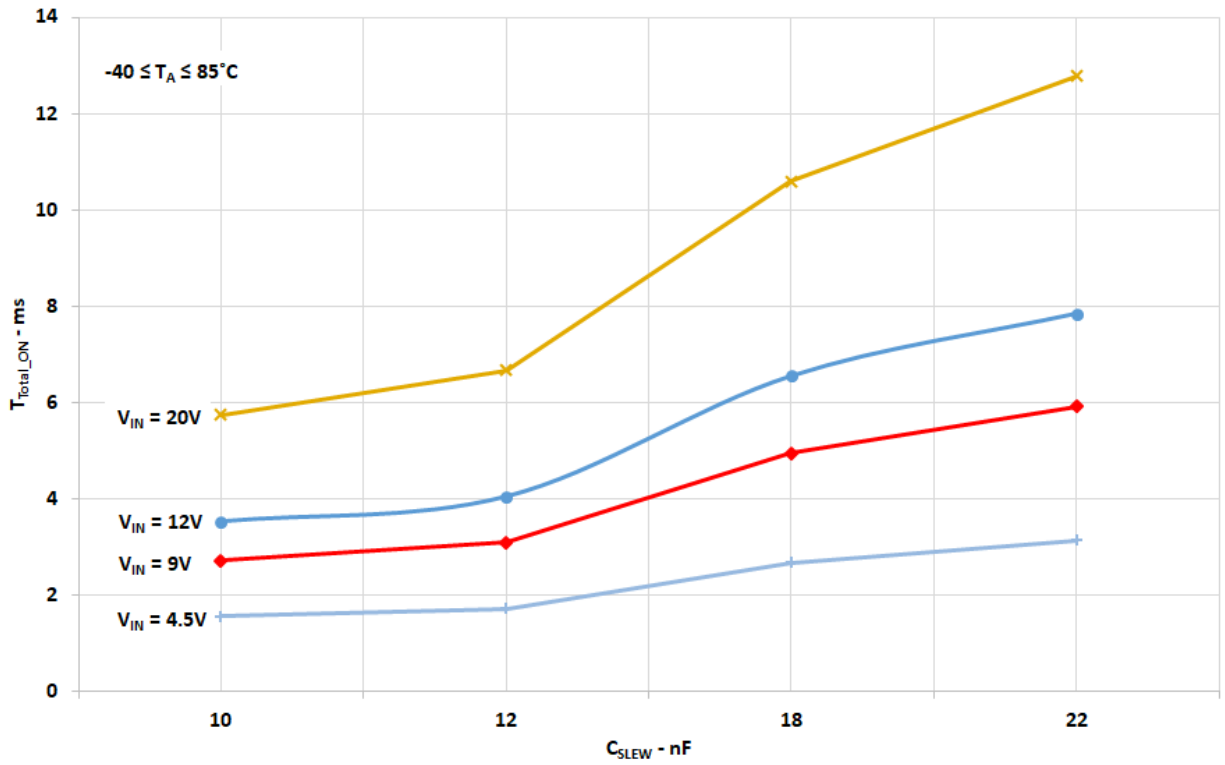

©2022 Renesas Electronics Corporation

Timing Diagram - Basic Operation including Active Current Limit Protection

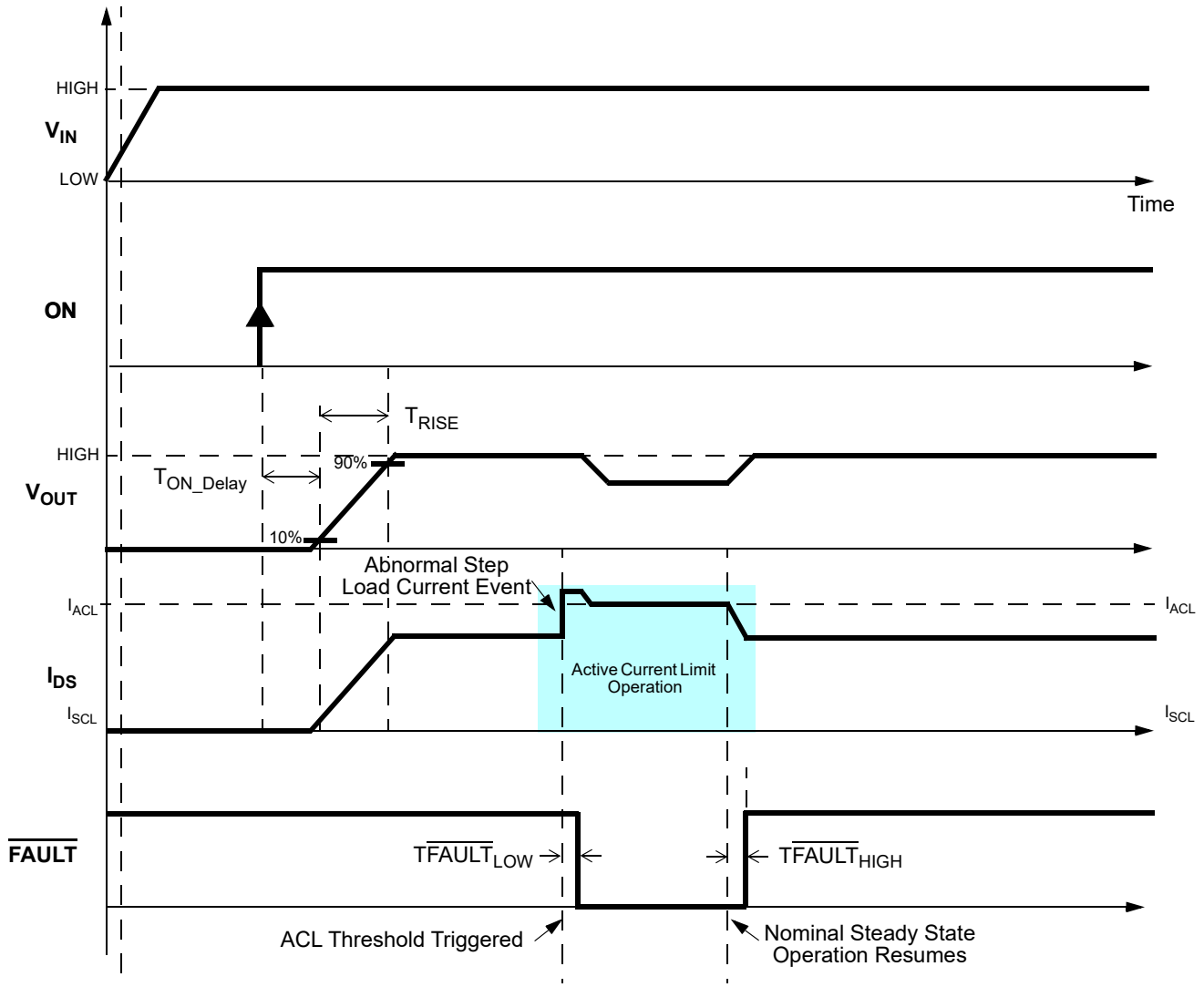

©2022 Renesas Electronics Corporation

Timing Diagram - Active Current Limit & Thermal Protection Operation

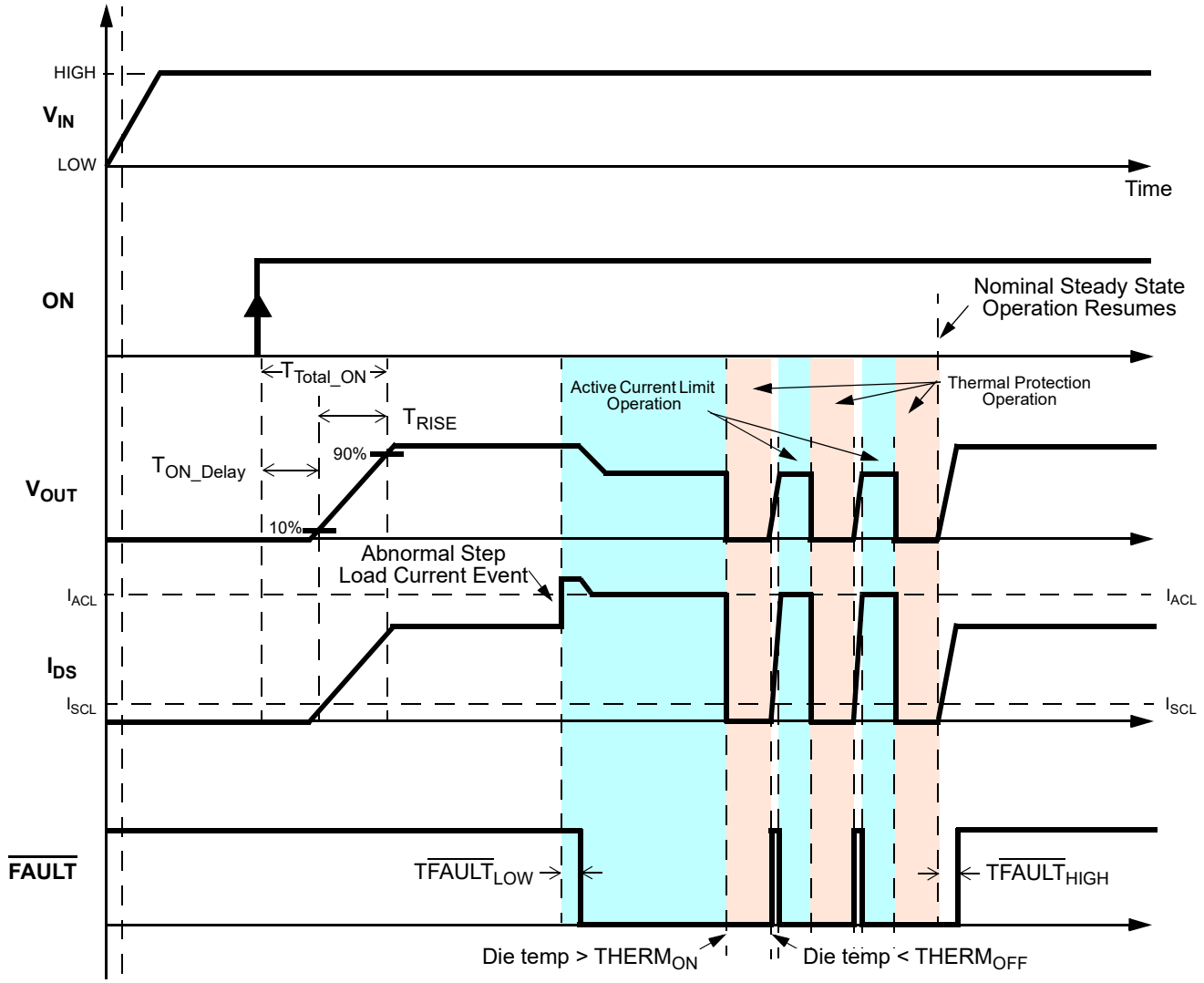

©2022 Renesas Electronics Corporation

Timing Diagram - Basic Operation including Active Current + Internal FET SOA Protection

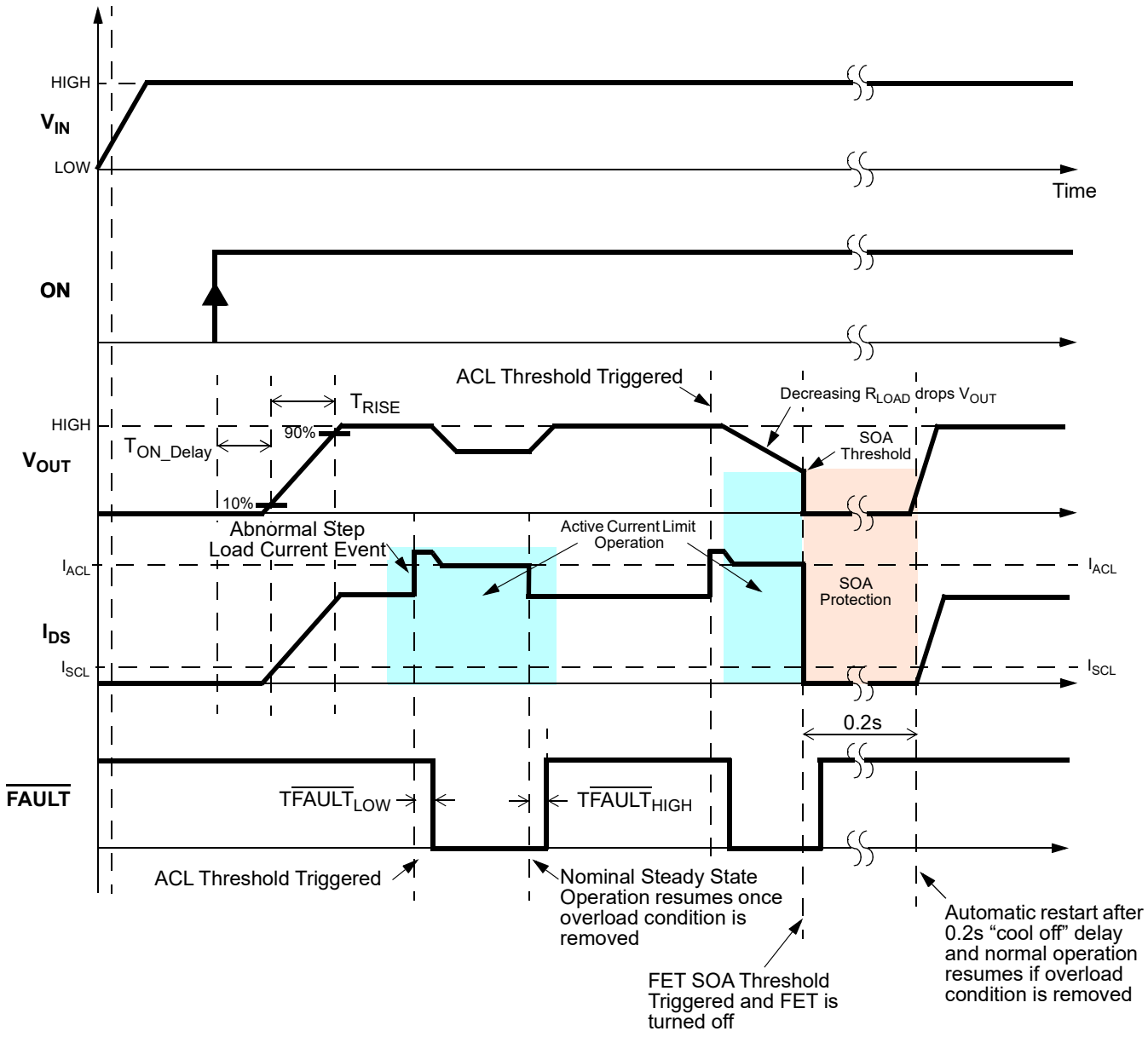

©2022 Renesas Electronics Corporation

SLG59H1128V Application Diagram

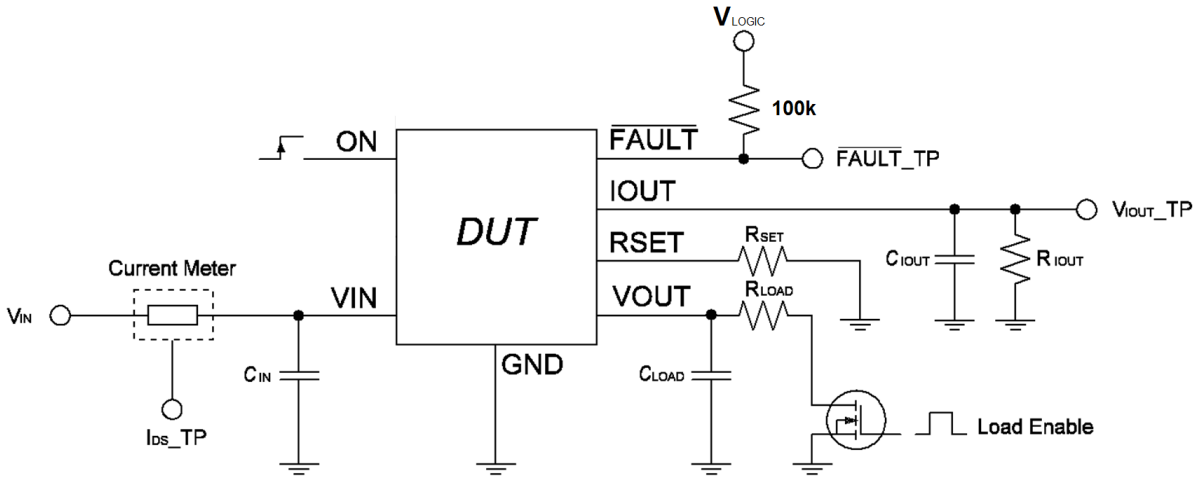

Figure 1. Test setup Application Diagram

Typical Turn-on Waveforms

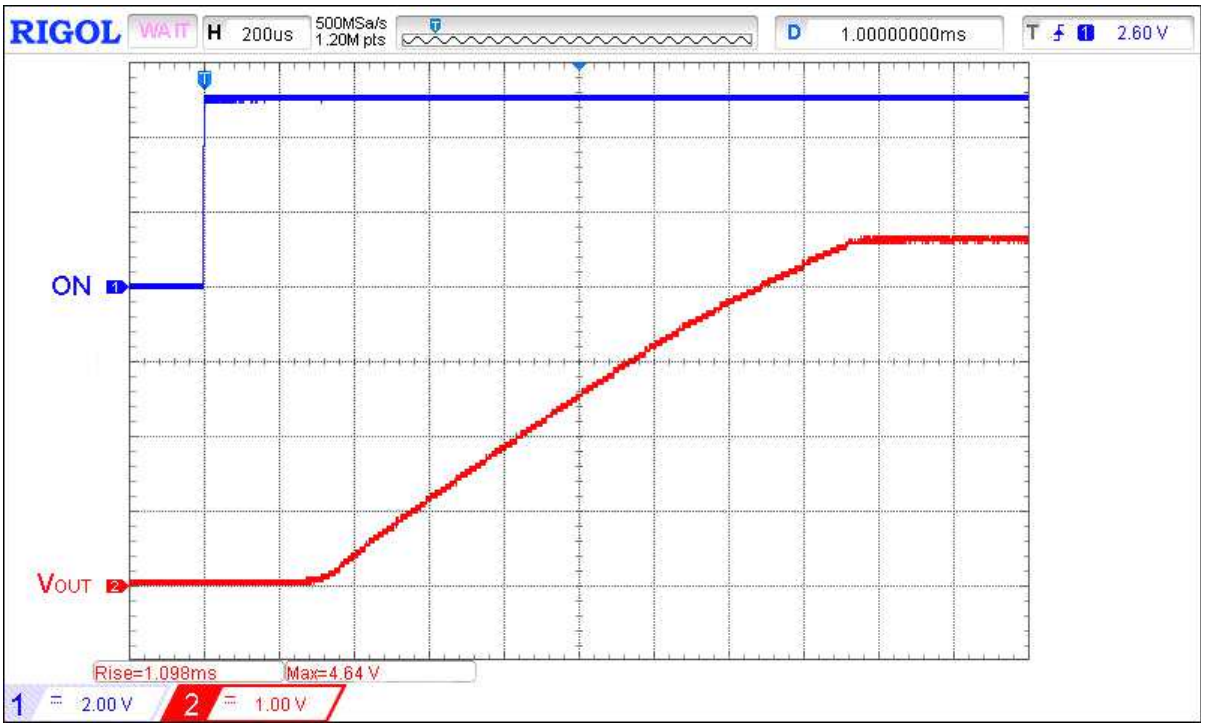

Figure 2. Typical Turn ON operation waveform for V_{IN} = 4.5 V, C_{SLEW} = 10 nF, C_{LOAD} = 10 µF, R_{LOAD} = 100 Ω

©2022 Renesas Electronics Corporation

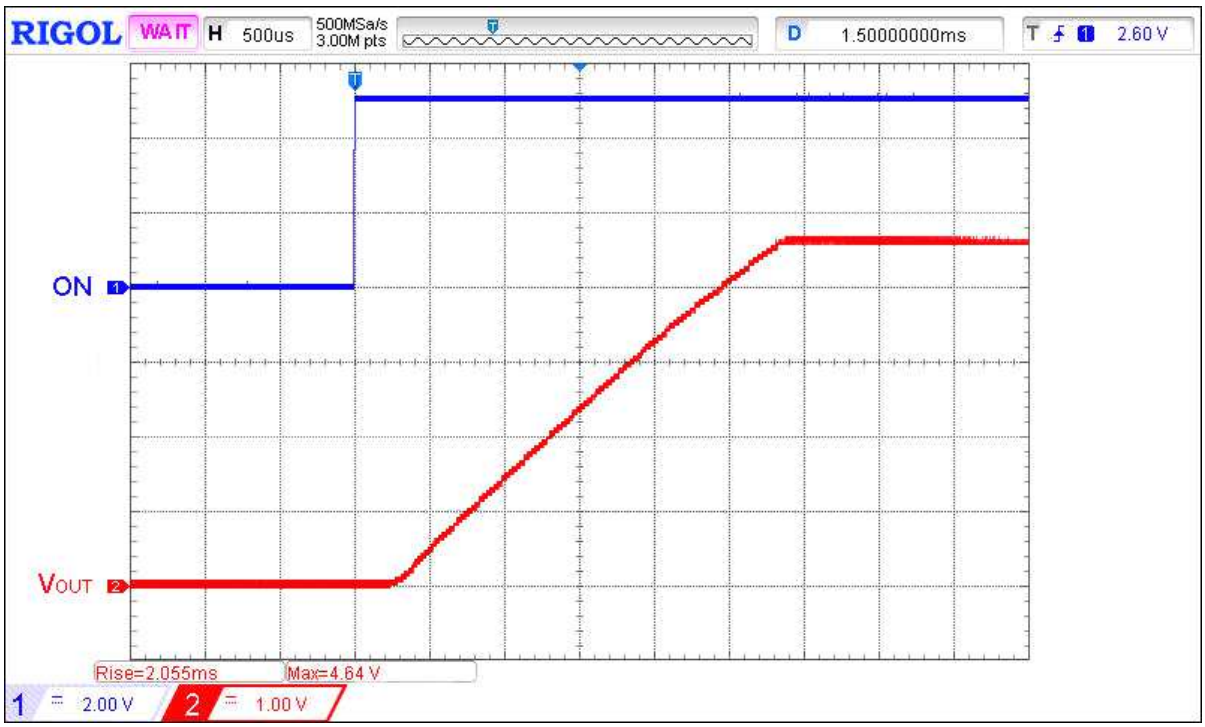

Figure 3. Typical Turn ON operation waveform for V_{IN} = 4.5 V, C_{SLEW} = 18 nF, C_{LOAD} = 10 µF, R_{LOAD} = 100 Ω

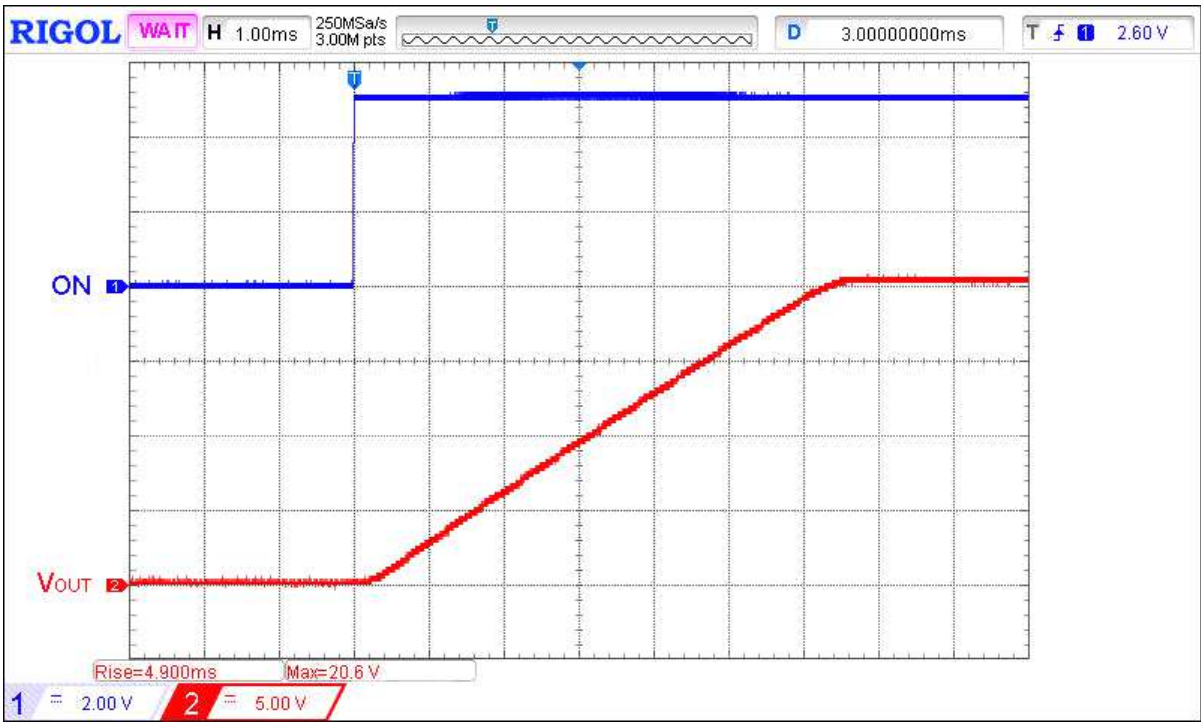

Figure 4. Typical Turn ON operation waveform for V_{IN} = 20 V, C_{SLEW} = 10 nF, C_{LOAD} = 10 µF, R_{LOAD} = 100 Ω

©2022 Renesas Electronics Corporation

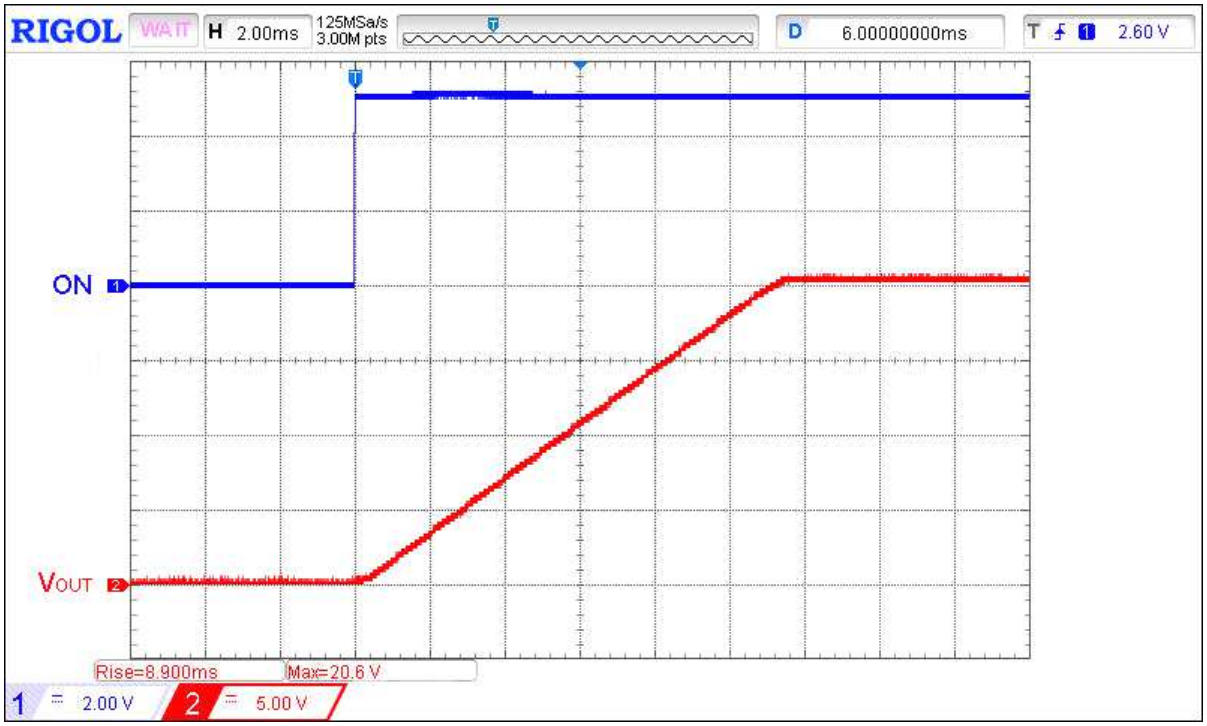

Figure 5. Typical Turn ON operation waveform for V_{IN} = 20 V, C_{SLEW} = 18 nF, C_{LOAD} = 10 µF, R_{LOAD} = 100 Ω

Typical Turn-off Waveforms

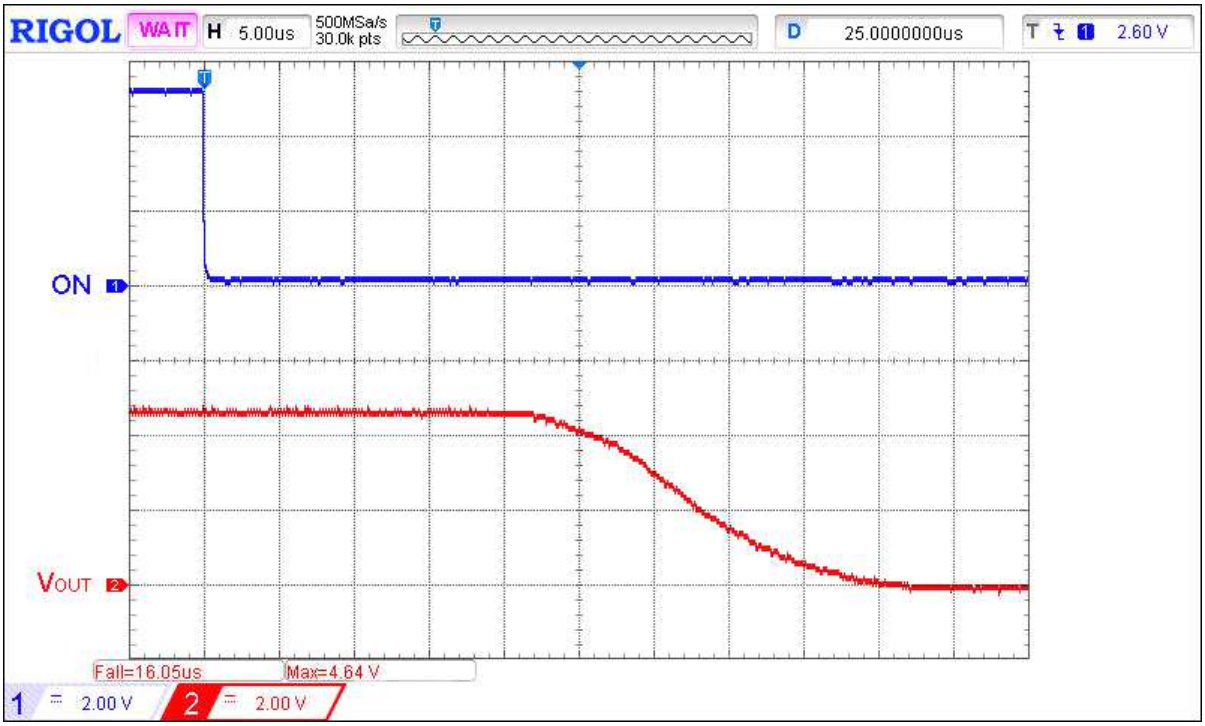

Figure 6. Typical Turn OFF operation waveform for V_{IN} = 4.5 V, C_{SLEW} = 10 nF, no C_{LOAD} , R_{LOAD} = 100 Ω

©2022 Renesas Electronics Corporation

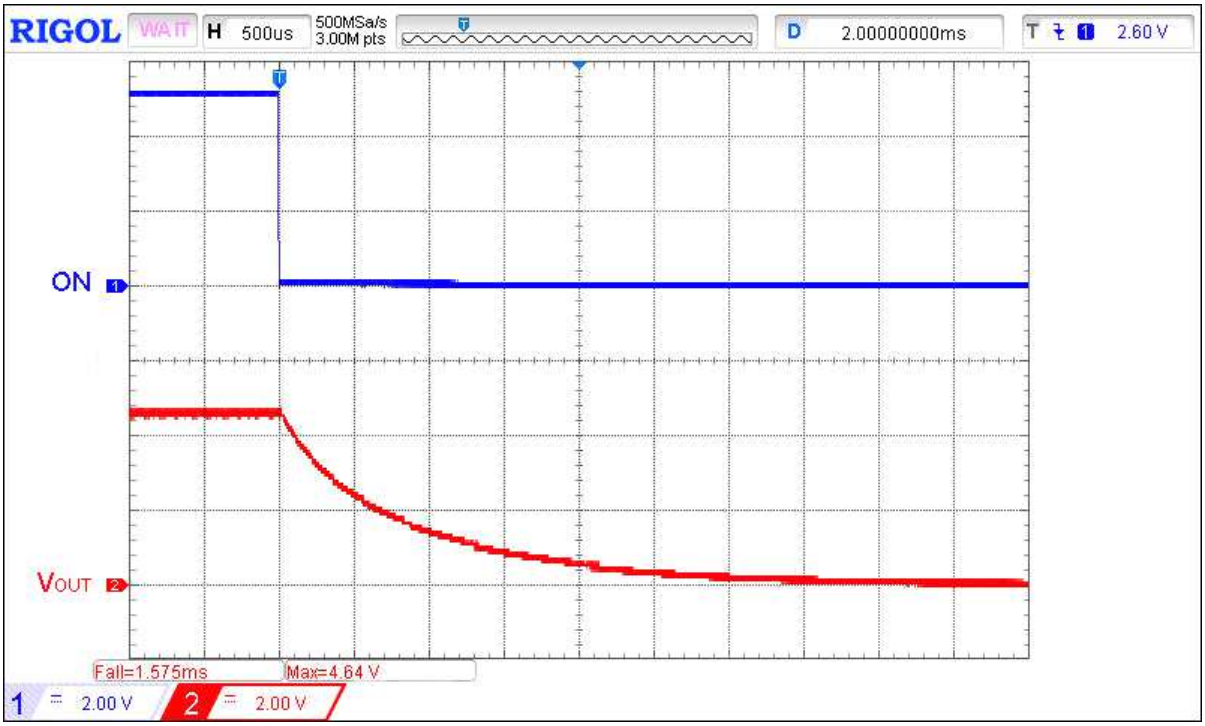

Figure 7. Typical Turn OFF operation waveform for V_{IN} = 4.5 V, C_{SLEW} = 10 nF, C_{LOAD} = 10 µF, R_{LOAD} = 100 Ω

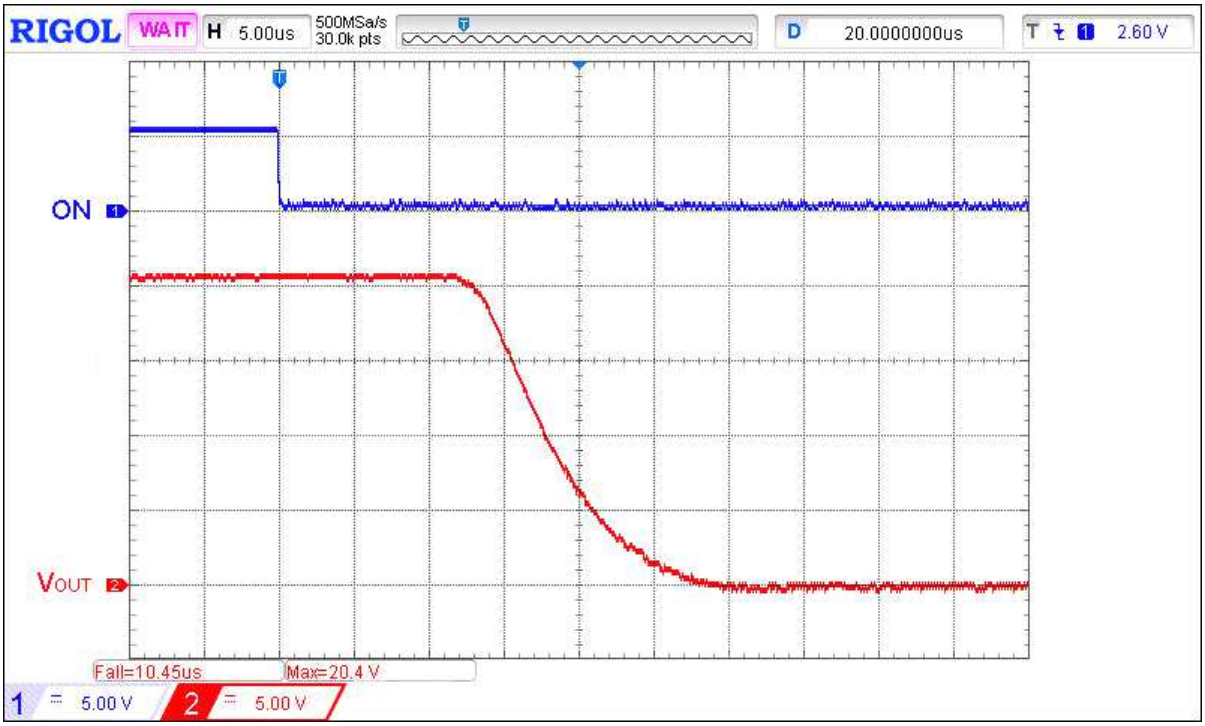

Figure 8. Typical Turn OFF operation waveform for V_{IN} = 20 V, C_{SLEW} = 10 nF, no C_{LOAD} , R_{LOAD} = 100 Ω

©2022 Renesas Electronics Corporation

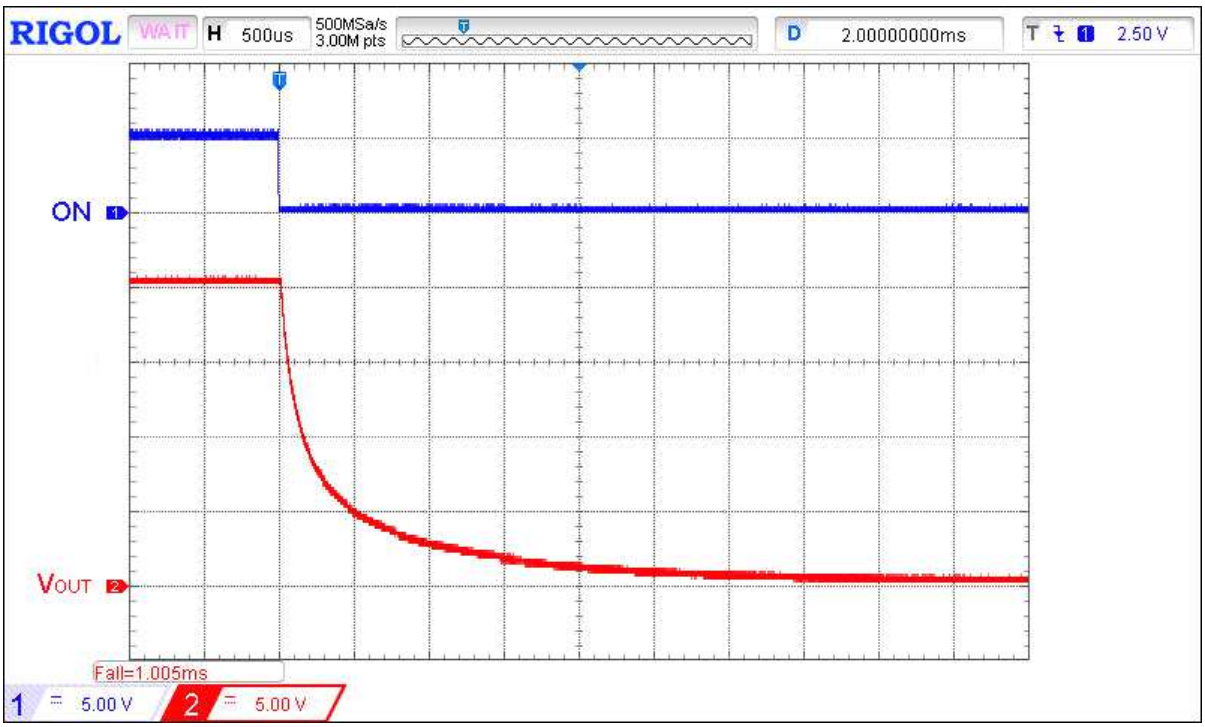

Figure 9. Typical Turn OFF operation waveform for V_{IN} = 20 V, C_{SLEW} = 10 nF, C_{LOAD} = 10 µF, R_{LOAD} = 100 Ω

Typical ACL Operation Waveforms

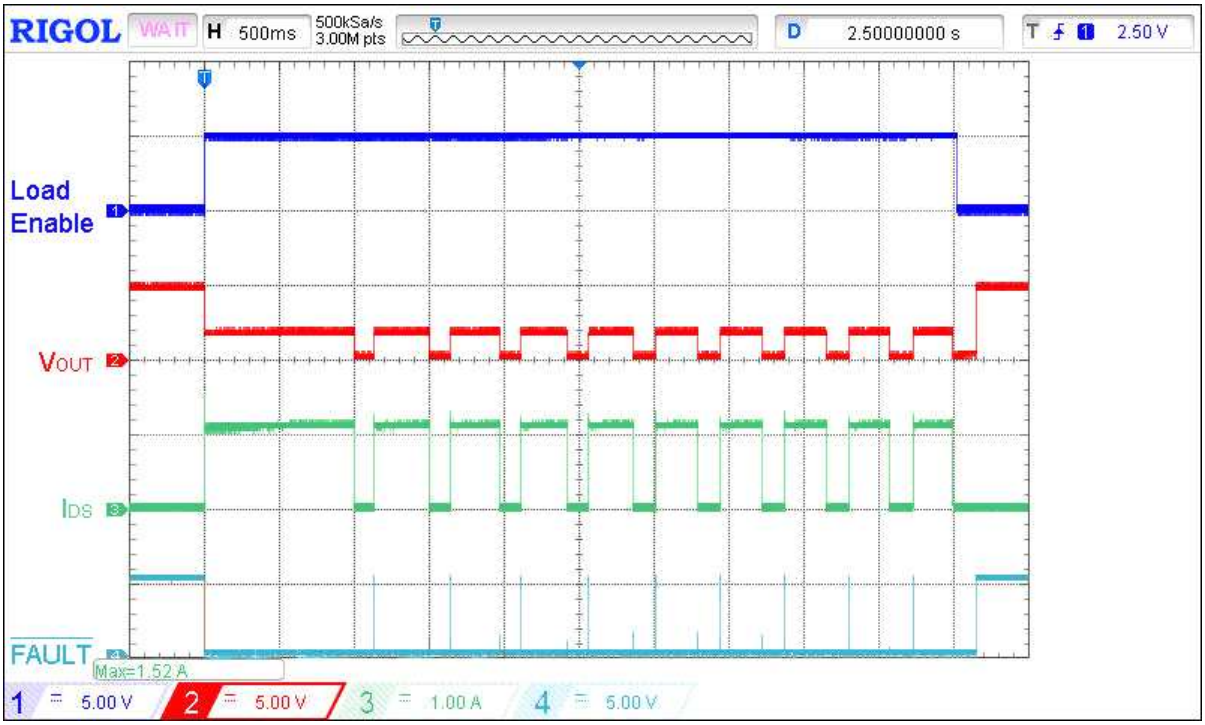

Figure 10. Typical ACL operation waveform for V_{IN} = 4.5 V, C_{LOAD} = 10 µF, I_{ACL} = 1 A, R_{SET} = 91 kΩ

©2022 Renesas Electronics Corporation

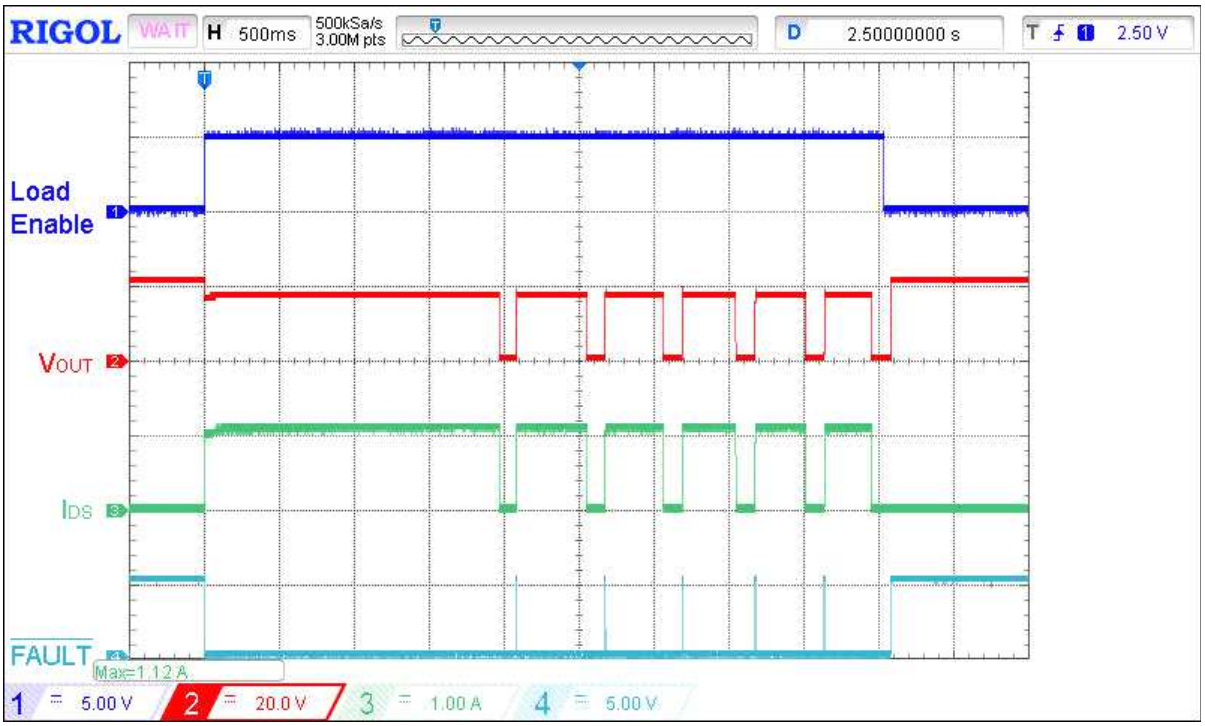

Figure 11. Typical ACL operation waveform for V_{IN} = 20 V, C_{LOAD} = 10 µF, I_{ACL} = 1 A, R_{SET} = 91 kΩ

Typical SOA Waveforms

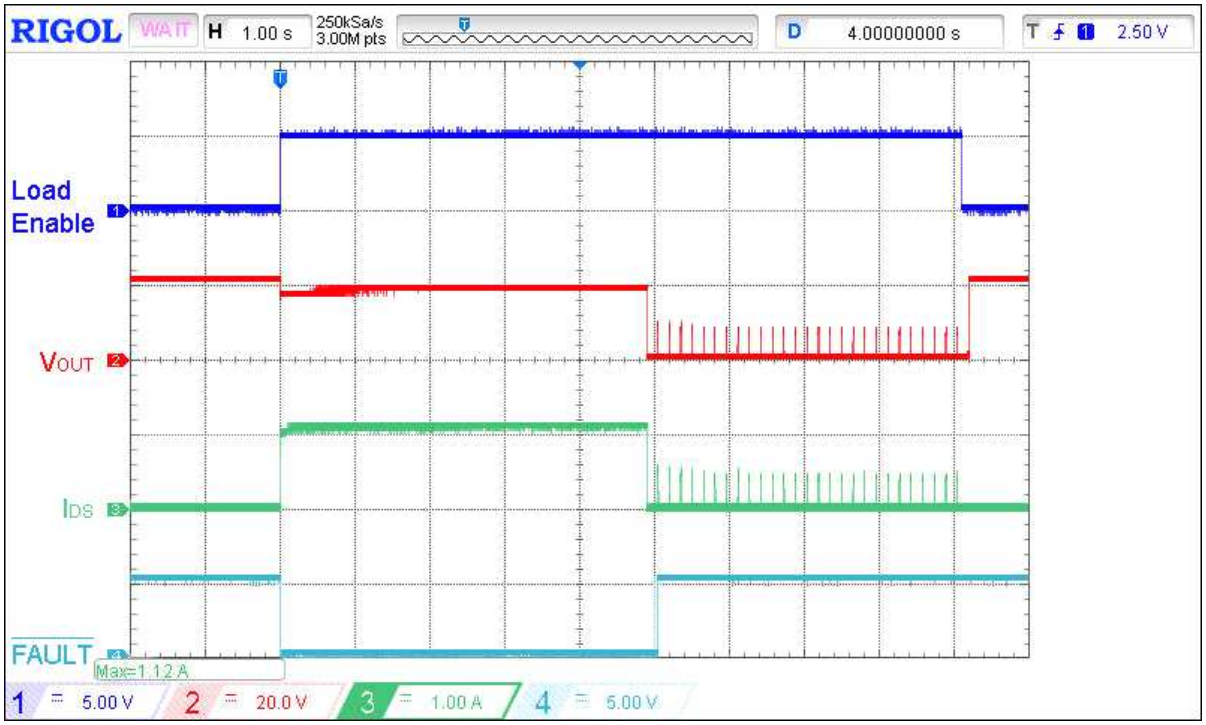

Figure 12. Typical SOA waveform for V_{IN} = 20 V, C_{LOAD} = 10 µF, I_{ACL} = 1 A, R_{SET} = 91 kΩ

©2022 Renesas Electronics Corporation

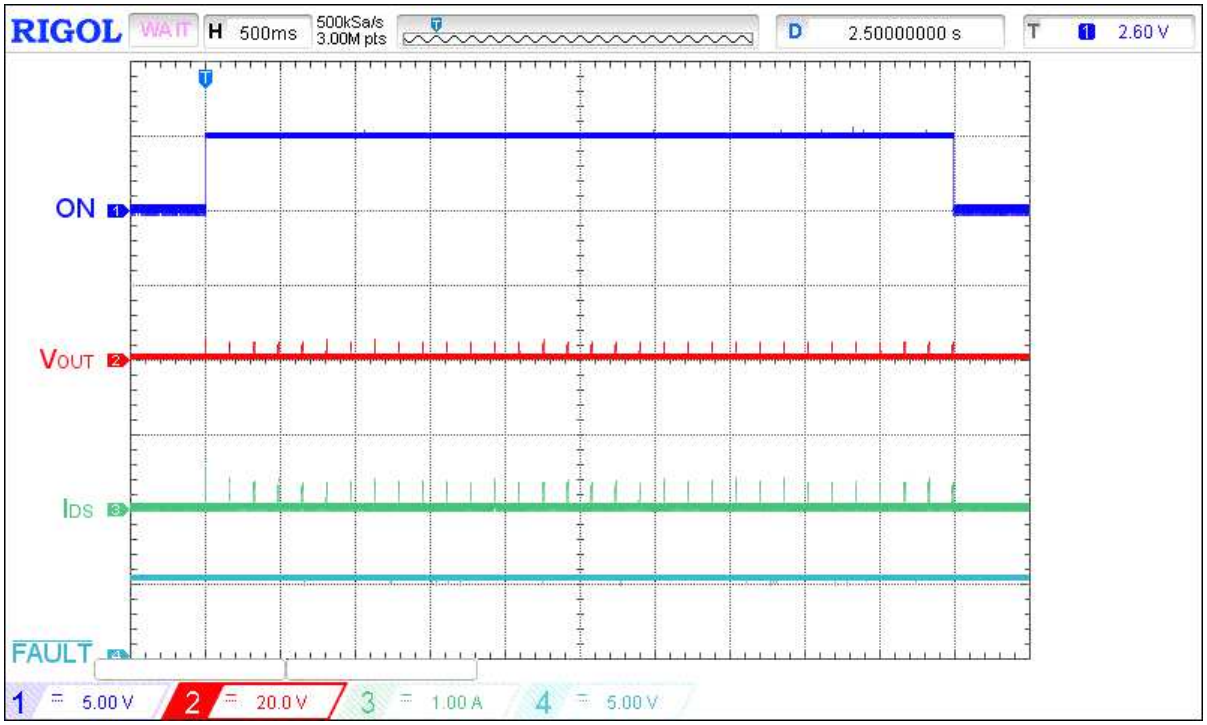

Figure 13. Typical SOA waveform during power up under heavy load for V_{IN} = 20 V, C_{LOAD} = 10 µF, R_{SET} = 30.1 kΩ, R_{LOAD} = 10 Ω

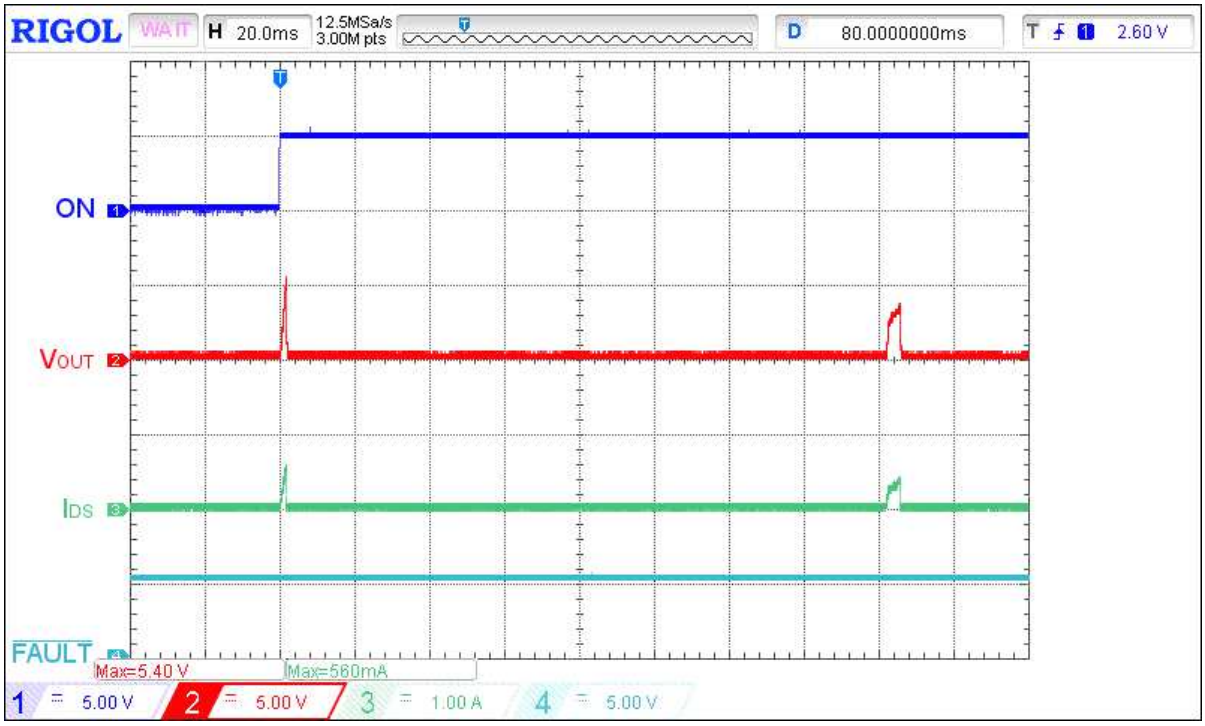

Figure 14. Extended typical SOA waveform during power up under heavy load for V_{IN} = 20 V, C_{LOAD} = 10 µF, R_{SET} = 30.1 kΩ, R_{LOAD} = 10 Ω

©2022 Renesas Electronics Corporation

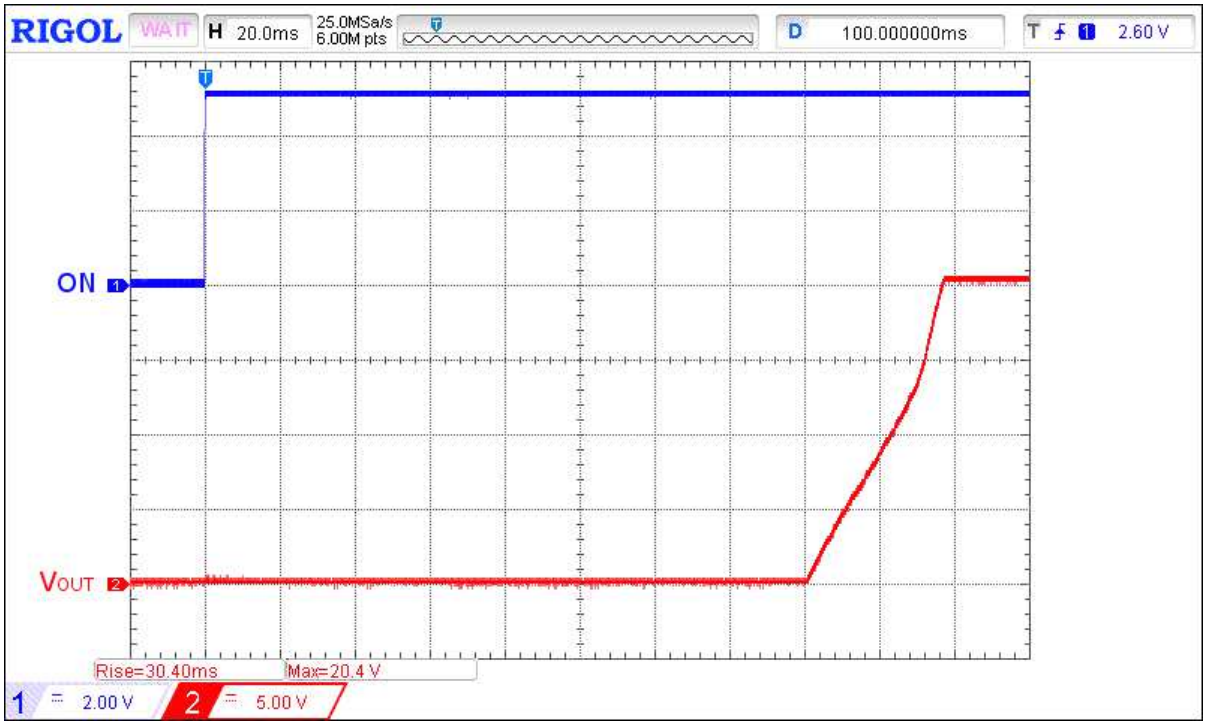

Figure 15. Typical non-monotonic V_{OUT} ramping waveform during power up on heavy load for V_{IN} = 20 V, C_{LOAD} = 470 µF, C_{SLEW} = 10 nF, R_{SET} = 91 kΩ, R_{LOAD} = 42 Ω

Typical $\overline{\text{FAULT}}$ Operation Waveforms

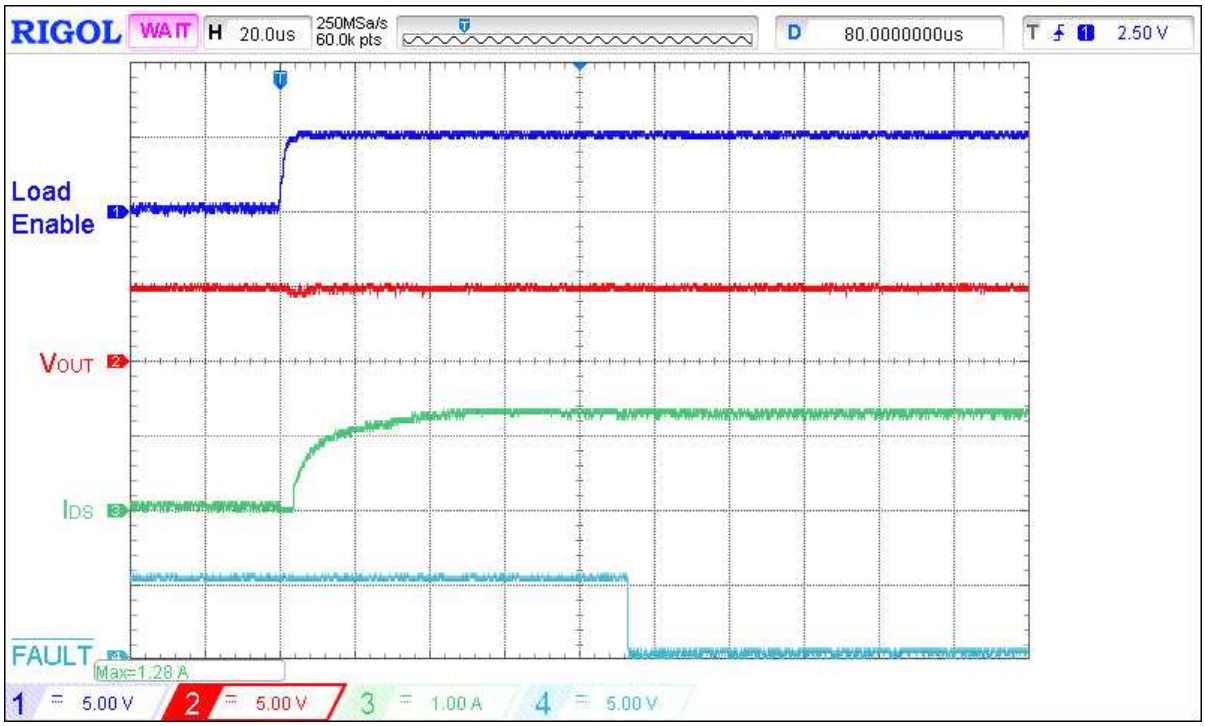

Figure 16. Typical $\overline{\text{FAULT}}$ assertion waveform for V_{IN} = 4.5 V, C_{LOAD} = 10 µF, I_{ACL} = 1 A, R_{SET} = 91 kΩ, switch on 3.9 Ω load

©2022 Renesas Electronics Corporation

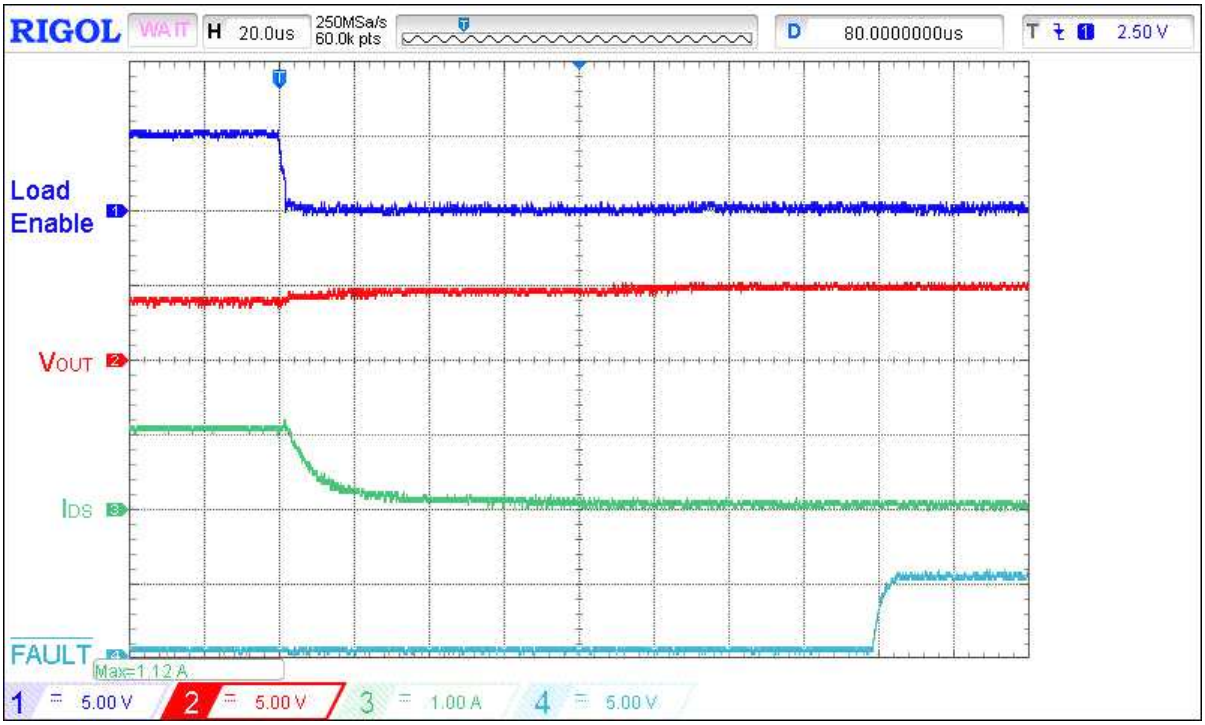

Figure 17. Typical $\overline{\text{FAULT}}$ de-assertion waveform for V_{IN} = 4.5 V, C_{LOAD} = 10 µF, I_{ACL} = 1 A, R_{SET} = 91 kΩ, switch out 3.9 Ω load

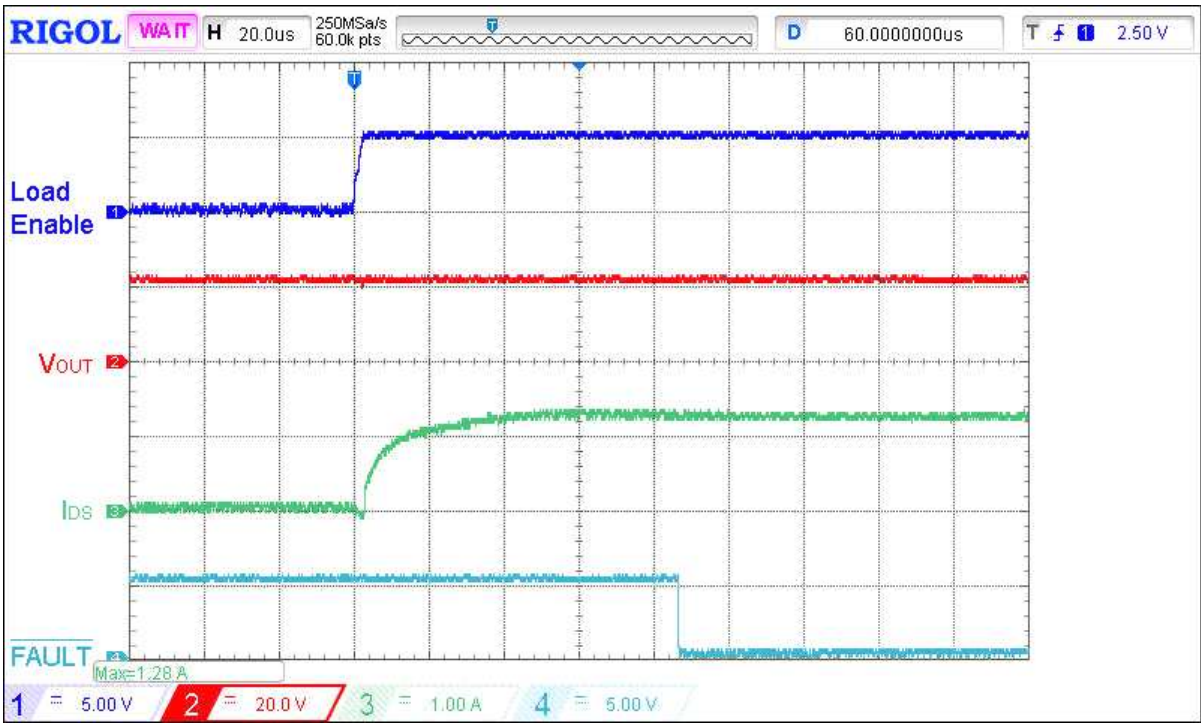

Figure 18. Typical $\overline{\text{FAULT}}$ assertion waveform for V_{IN} = 20 V, C_{LOAD} = 10 µF, I_{ACL} = 1 A, R_{SET} = 91 kΩ, switch on 15.6 Ω load

©2022 Renesas Electronics Corporation

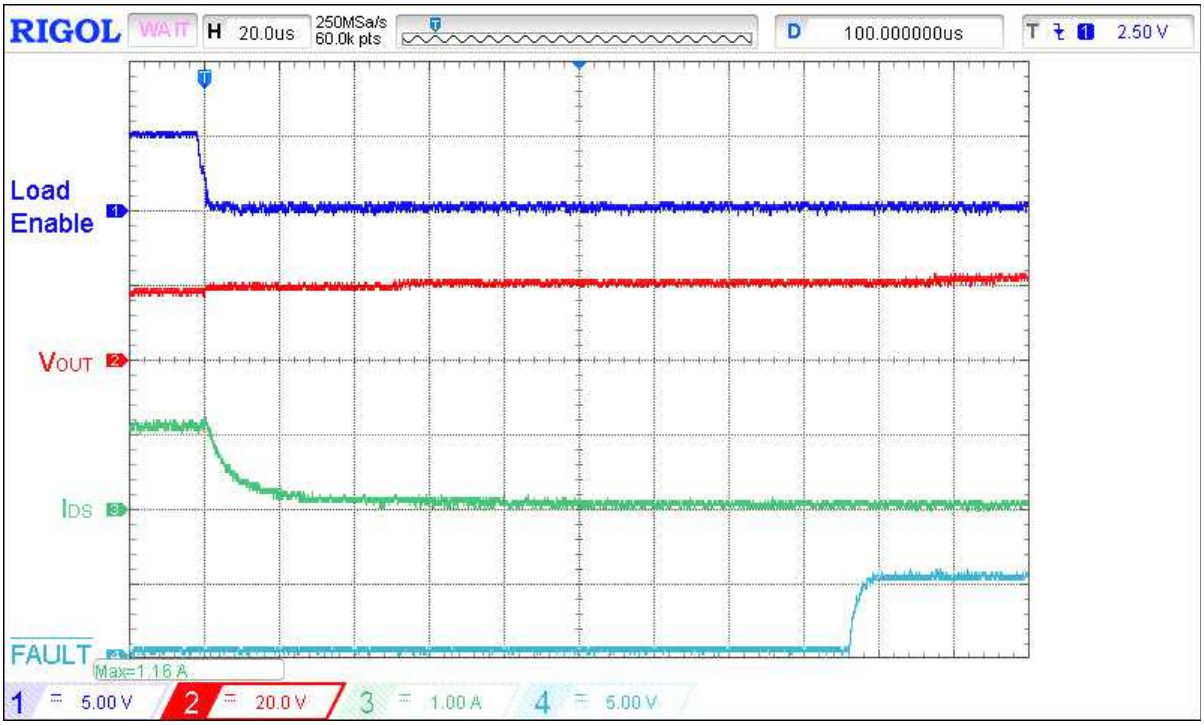

Figure 19. Typical $\overline{\text{FAULT}}$ de-assertion waveform for V_{IN} = 20 V, C_{LOAD} = 10 µF, I_{ACL} = 1 A, R_{SET} = 91 kΩ, switch out 15.6 Ω load

©2022 Renesas Electronics Corporation

Typical I_{OUT} Response Time Waveforms

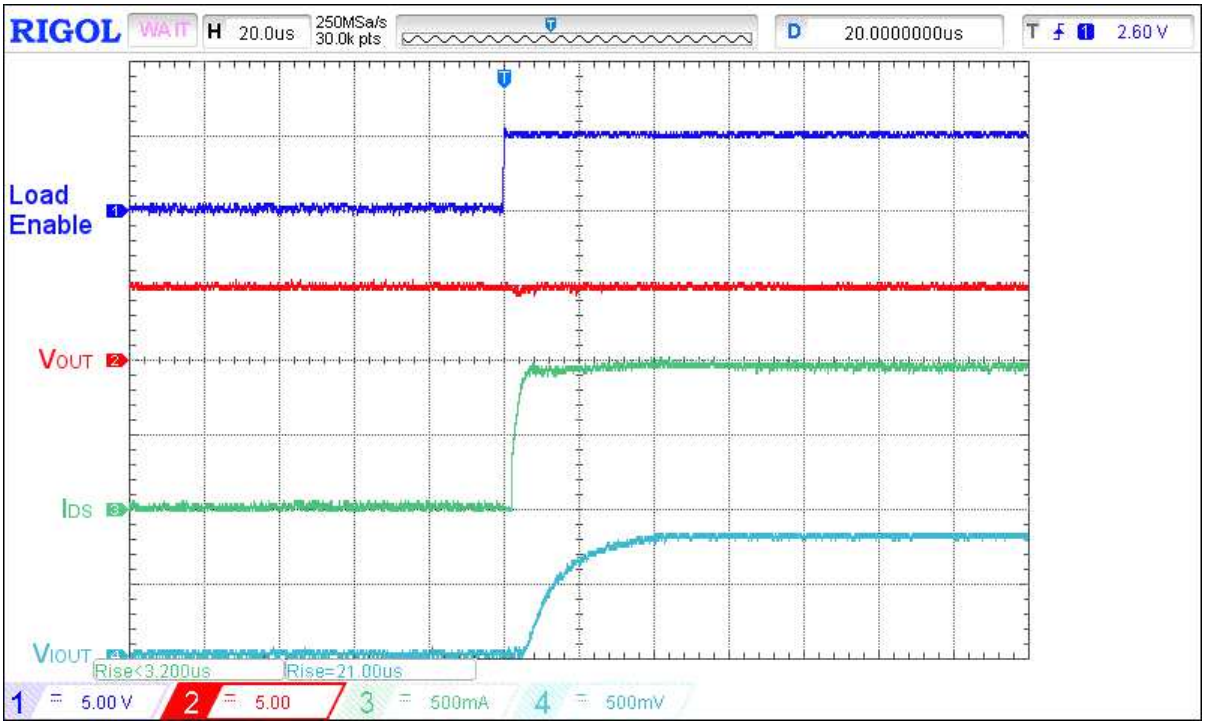

Figure 20. Typical I_{OUT} response time waveform for V_{IN} = 4.5 V, C_{LOAD} = 10 µF, R_{LOAD} = 4.5 Ω, C_{IOUT} = 0.18 nF, R_{IOUT} = 84.5 kΩ, load step 0 A to 1 A

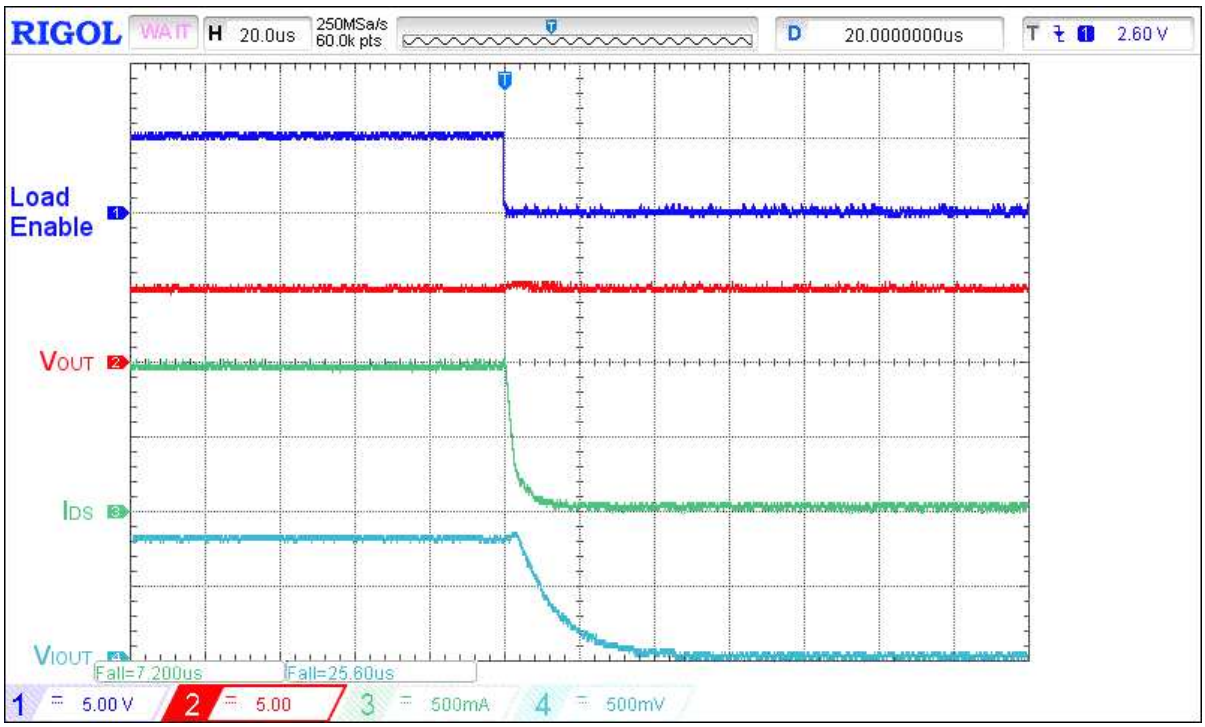

Figure 21. Typical I_{OUT} response time waveform for V_{IN} = 4.5 V, C_{LOAD} = 10 µF, R_{LOAD} = 4.5 Ω, C_{IOUT} = 0.18 nF, R_{IOUT} = 84.5 kΩ, load step 1 A to 0 A

©2022 Renesas Electronics Corporation

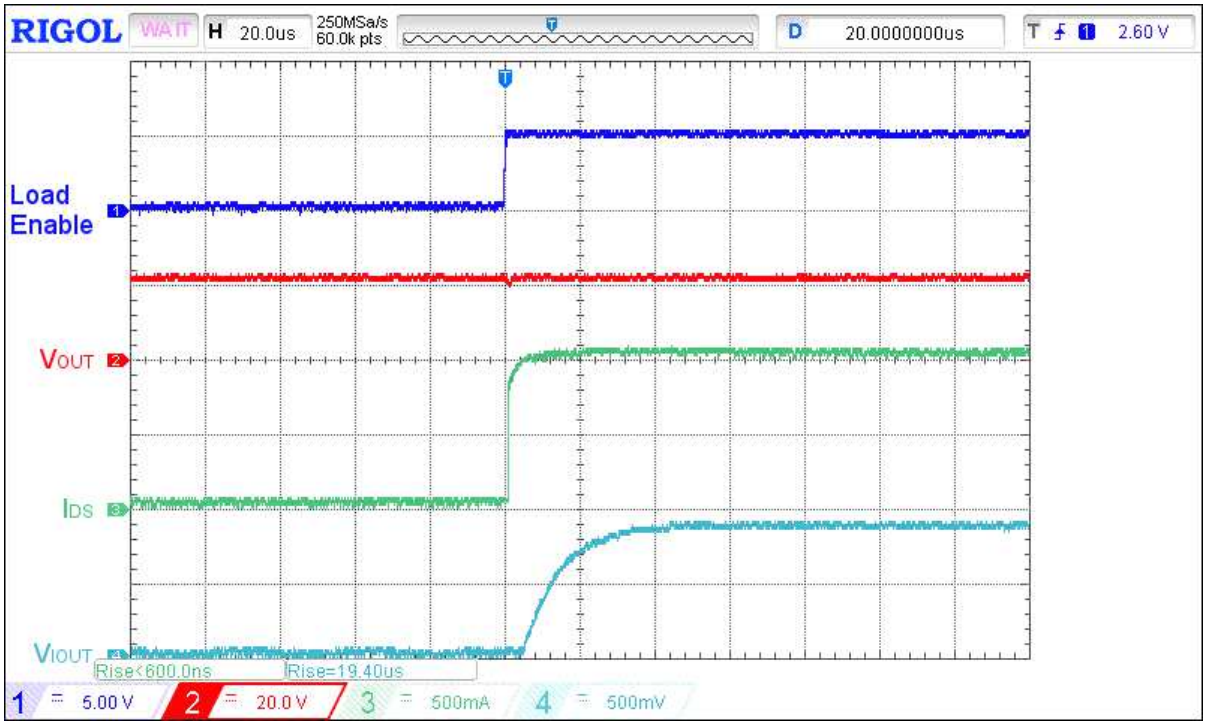

Figure 22. Typical I_{OUT} response time waveform for V_{IN} = 20 V, C_{LOAD} = 10 µF, R_{LOAD} = 20 Ω, C_{IOUT} = 0.18 nF, R_{IOUT} = 84.5 kΩ, load step 0 A to 1 A

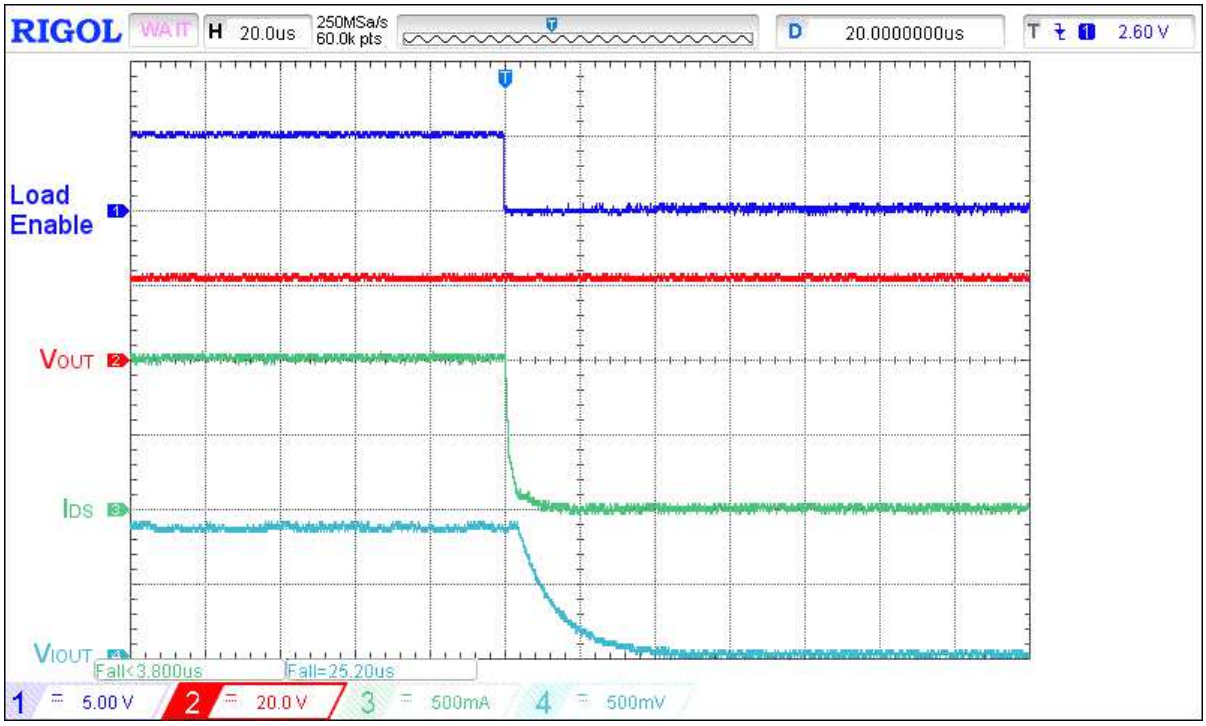

Figure 23. Typical I_{OUT} response time waveform for V_{IN} = 20 V, C_{LOAD} = 10 µF, R_{LOAD} = 20 Ω, C_{IOUT} = 0.18 nF, R_{IOUT} = 84.5 kΩ, load step 1 A to 0 A

©2022 Renesas Electronics Corporation

Applications Information

High Voltage GreenFET Safe Operating Area Explained

Renesas's High Voltage GreenFET load swithes incorporate a number of internal protection features that prevents them from damaging themselves or any other circuit or subcircuit downstream of them. One particular protection feature is their Safe Operation Area (SOA) protection. SOA protection is automatically activated under overpower and, in some cases, under overcurrent conditions. Overpower SOA is activated if package power dissipation exceeds an internal 10 W threshold and High Voltage GreenFET devices will quickly switch off (open circuit) upon overpower detection and automatically resume (close) nominal operation once overpower condition no longer exists.

One of the possible ways to have an overpower condition trigger SOA protection is when High Voltage GreenFET products are enabled into heavy output resistive loads and/or into large load capacitors. It is under these conditions to follow carefully the "Safe Start-up Loading" guidance in the Applications section of the datasheet. During an overcurrent condition, High Voltage GreenFET devices will try to limit the output current to the level set by the external R_{SET} resistor. Limiting the output current, however, causes an increased voltage drop across the FET's channel because the FET's RDS_{ON} increased as well. Since the FET's RDS_{ON} is larger, package power dissipation also increases. If the resultant increase in package power dissipation is higher/equal than 10 W, internal SOA protection will be triggered and the FET will open circuit (switch off). Every time SOA protection is triggered, all High Voltage GreenFET devices will automatically attempt to resume nominal operation after 160 ms. The automatic retry attempt only allows power-up with SOA at 5 W. This SOA fold back power ensures that the FET survives a short circuit condition. To clear the 5 W SOA fold back, switch the ON pin to "LOW" to power reset SOA to 10 W.

Safe Start-up Condition

SLG59H1128V has built-in protection to prevent over-heating during start-up into a heavy load. Overloading the VOUT pin with a capacitor and a resistor may result in non-monotonic V_{OUT} ramping (*Figure 15*) or repeated restarts (*Figure 13* and *Figure 14*). In general, under light loading on VOUT, V_{OUT} ramping can be controlled with C_{SLEW} value. The following equation serves as a guide:

$$C_{SLEW} = \frac{T_{RISE}}{V_{IN}} \times 4.9\ \mu A \times \frac{20}{3}$$

where
T_{RISE} = Total rise time from 10% V_{OUT} to 90% V_{OUT}
V_{IN} = Input Voltage
C_{SLEW} = Capacitor value for CAP pin

When capacitor and resistor loading on VOUT during start up, the following tables will ensure V_{OUT} ramping is monotonic without triggering internal protection:

Safe Start-up Loading for V_{IN} = 12 V (Monotonic Ramp)			
Slew Rate (V/ms)	**C_{SLEW} (nF)[2]**	**C_{LOAD} (µF)**	**R_{LOAD} (Ω)**
1	33.3	500	7
2	16.7	250	7
3	11.1	160	7
4	8.3	120	7
5	6.7	100	7

©2022 Renesas Electronics Corporation

Safe Start-up Loading for V_{IN} = 20 V (Monotonic Ramp)			
Slew Rate (V/ms)	C_{SLEW} (nF)[2]	C_{LOAD} (µF)	R_{LOAD} (Ω)
0.5	66.7	500	25
1.0	33.3	250	25
1.5	22.2	160	25
2.0	16.7	120	25
2.5	13.3	100	25

Note 2: Select the closest-value tolerance capacitor.

Setting the SLG59H1128V's Active Current Limit

R_{SET} (kΩ)	Active Current Limit (A)[3]
91	1
45	2
30	3
18	5

Note 3: Active Current Limit accuracy is ±15% over voltage range and temperature range

Setting the SLG59H1128V's Input Overvoltage Lockout Threshold

As shown in the table below, SEL[1,0] selects the V_{IN} overvoltage threshold at which the SLG59H1128V's internal state machine will turn OFF (open circuit) the power MOSFET if V_{IN} exceeds the selected threshold.

SEL1	SEL0	$V_{IN(OVLO)}$ (Typ)
0	0	6 V
0	1	10.8 V
1	0	14.4 V
1	1	24 V

For example, SEL[1,1] would be the most appropriate setting for applications where the steady-state V_{IN} can extend up to 20 V without causing any damage to the SLG59H1128V since the IC is 29-V tolerant.

With an activated SLG59H1128V (ON=HIGH) and at any time V_{IN} crosses the programmed V_{IN} overvoltage threshold, the state machine opens the load switch and asserts the $\overline{FAULT}$ pin within $T\overline{FAULT}_{LOW}$.

In applications with a deactivated or inactive SLG59H1128V ($V_{IN} > V_{IN(UVLO)}$ and ON=LOW) and if the applied V_{IN} is higher than the programmed $V_{IN(OVLO)}$ threshold, the SLG59H1128V's state machine will keep the load switch open circuited if the ON pin is toggled LOW-to-HIGH. In these cases, the $\overline{FAULT}$ pin will also be asserted within $T\overline{FAULT}_{LOW}$ and will remain asserted until V_{IN} resumes nominal, steady-state operation.

In all cases, the SLG59H1128V's V_{IN} undervoltage lockout threshold is fixed at $V_{IN(UVLO)}$.

©2022 Renesas Electronics Corporation

Power Dissipation

The junction temperature of the SLG59H1128V depends on different factors such as board layout, ambient temperature, and other environmental factors. The primary contributor to the increase in the junction temperature of the SLG59H1128V is the power dissipation of its power MOSFET. Its power dissipation and the junction temperature in nominal operating mode can be calculated using the following equations:

$$PD = RDS_{ON} \times I_{DS}^2$$

where:

PD = Power dissipation, in Watts (W)
RDS_{ON} = Power MOSFET ON resistance, in Ohms (Ω)
I_{DS} = Output current, in Amps (A)

and

$$T_J = PD \times \theta_{JA} + T_A$$

where:

T_J = Junction temperature, in Celsius degrees (°C)
θ_{JA} = Package thermal resistance, in Celsius degrees per Watt (°C/W)
T_A = Ambient temperature, in Celsius degrees (°C)

In current-limit mode, the SLG59H1128V's power dissipation can be calculated by taking into account the voltage drop across the load switch (V_{IN}-V_{OUT}) and the magnitude of the output current in current-limit mode (I_{ACL}):

$$PD = (V_{IN}-V_{OUT}) \times I_{ACL} \text{ or}$$

$$PD = (V_{IN} - (R_{LOAD} \times I_{ACL})) \times I_{ACL}$$

where:

PD = Power dissipation, in Watts (W)
V_{IN} = Input Voltage, in Volts (V)
R_{LOAD} = Load Resistance, in Ohms (Ω)
I_{ACL} = Output limited current, in Amps (A)
$V_{OUT} = R_{LOAD} \times I_{ACL}$

©2022 Renesas Electronics Corporation

Layout Guidelines:

1. Since the VIN and VOUT pins dissipate most of the heat generated during high-load current operation, it is highly recommended to make power traces as short, direct, and wide as possible. A good practice is to make power traces with absolute minimum widths of 15 mils (0.381 mm) per Ampere. A representative layout, shown in Figure 24, illustrates proper techniques for heat to transfer as efficiently as possible out of the device;

2. To minimize the effects of parasitic trace inductance on normal operation, it is recommended to connect input C_{IN} and output C_{LOAD} low-ESR capacitors as close as possible to the SLG59H1128V's VIN and VOUT pins;

3. The GND pin should be connected to system analog or power ground plane.

4. 2 oz. copper is recommended for high current operation.

SLG59H1128V Evaluation Board:

A High Voltage GreenFET Evaluation Board for SLG59H1128V is designed according to the statements above and is illustrated on Figure 24. Please note that evaluation board has D_Sense and S_Sense pads. They cannot carry high currents and dedicated only for RDS_{ON} evaluation.

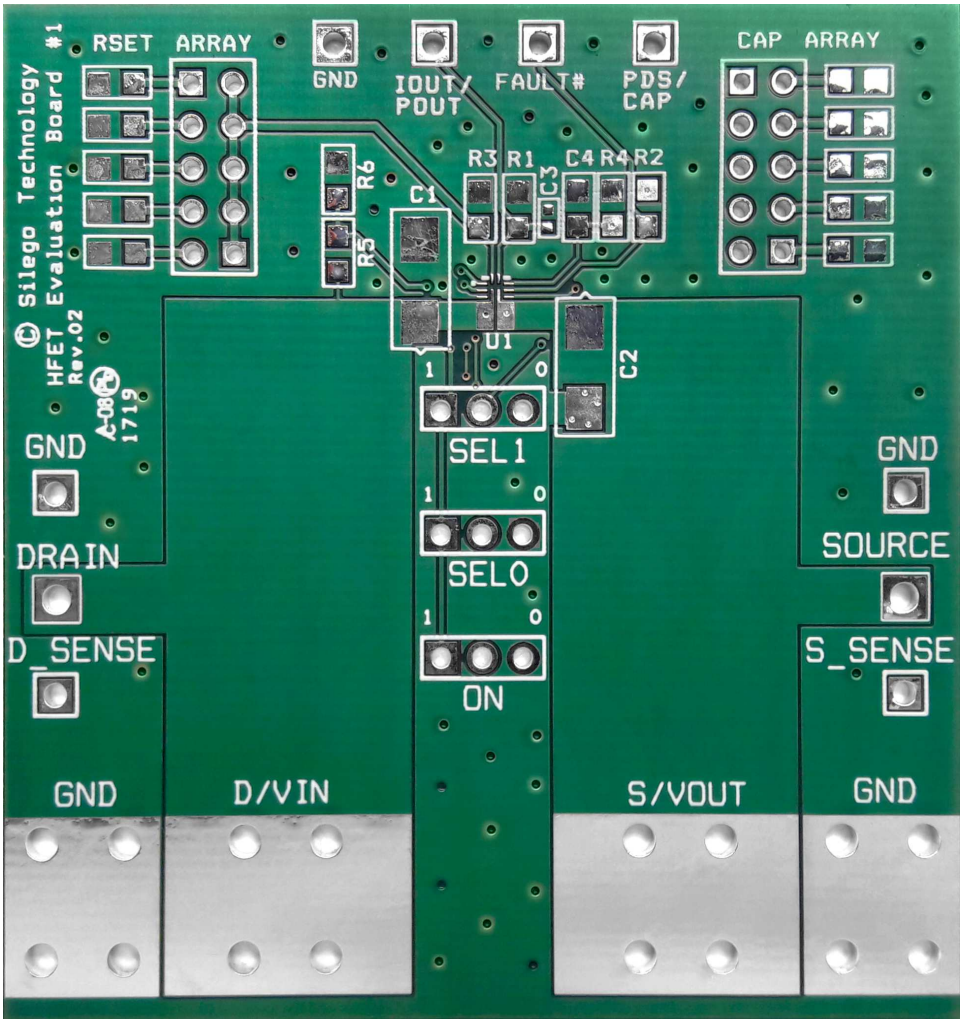

Figure 24. SLG59H1128V Evaluation Board

©2022 Renesas Electronics Corporation

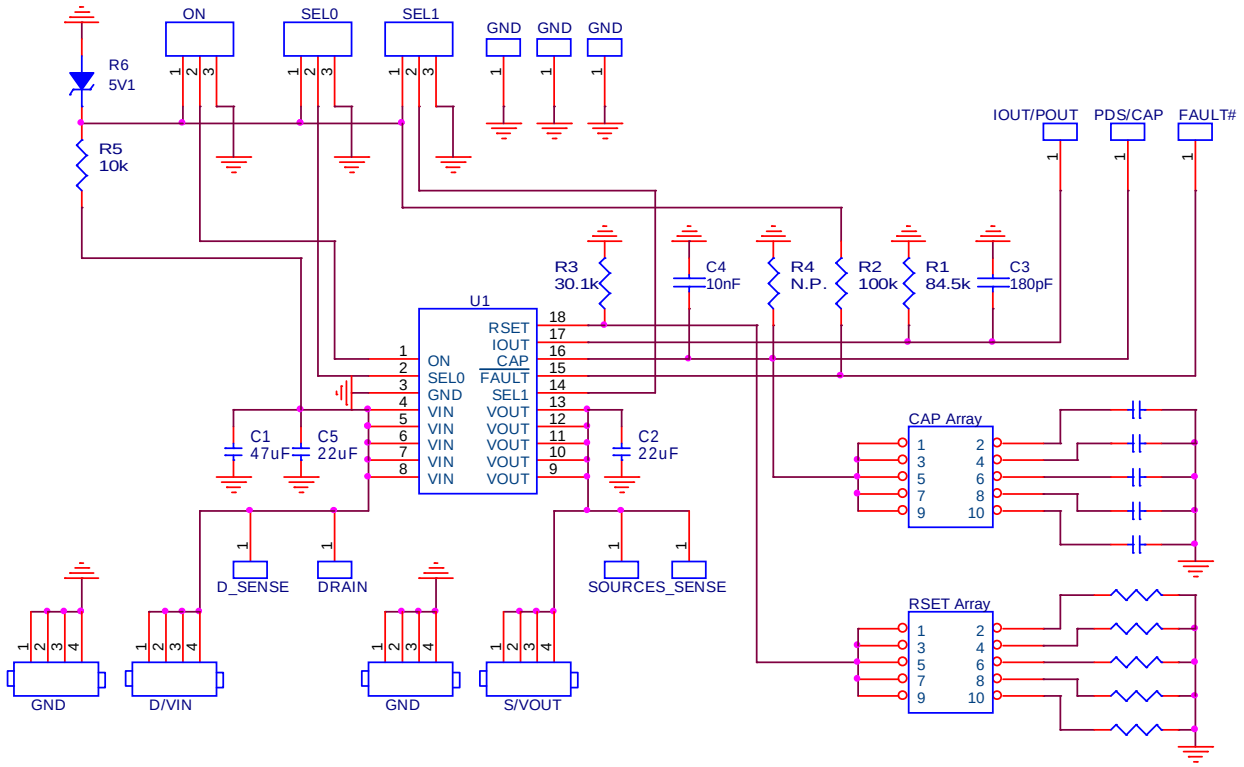

Figure 25. SLG59H1128V Evaluation Board Connection Circuit

Basic Test Setup and Connections

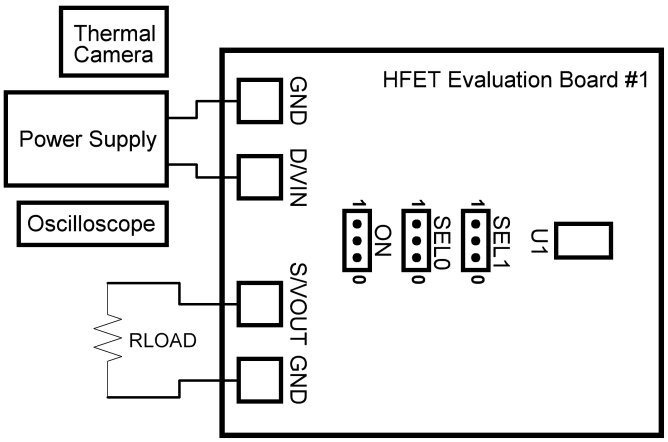

Figure 26. SLG59H1128V Evaluation Board Connection Circuit

EVB Configuration

1. Based on V_{IN} voltage, set SEL0, SEL1 to GND or 5 V to configure OVLO;

2. Connect oscilloscope probes to D/VIN, S/VOUT, ON, etc.;

3. Turn on Power Supply and set desired V_{IN} from 4.5 V…22 V range;

4 .Toggle the ON signal High or Low to observe SLG59H1128V operation.

©2022 Renesas Electronics Corporation

Test Result

Using thermal camera, we tested thermal distribution on the PCB after 2 min power up at V_{IN} = 20 V and I_{DS} = 4.5 A. Please note how evenly temperature is distributed on the PCB that prove a proper design of PCB and thus other components around High Voltage GreenFET will be not overheated. High Voltage GreenFET temperature is only 17 °C above the lab ambient temperature. Top left corner displays temperature in the “x” position of thermal camera. Right corner from top to bottom displays full scale of temperatures.

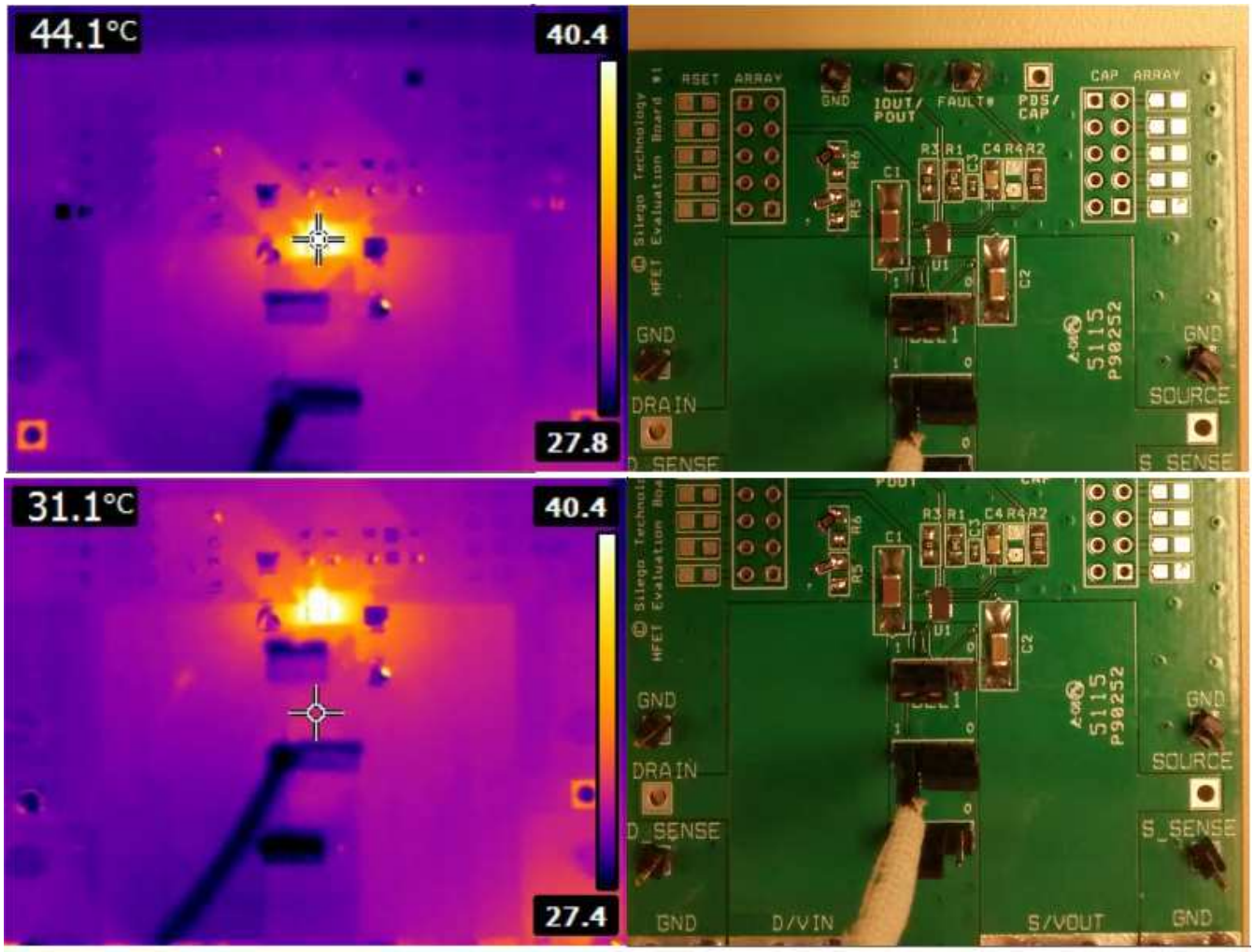

Figure 27. Thermal distribution for V_{IN} = 20 V, I_{DS} = 4.5 A after 2 min power up

©2022 Renesas Electronics Corporation

Package Top Marking System Definition

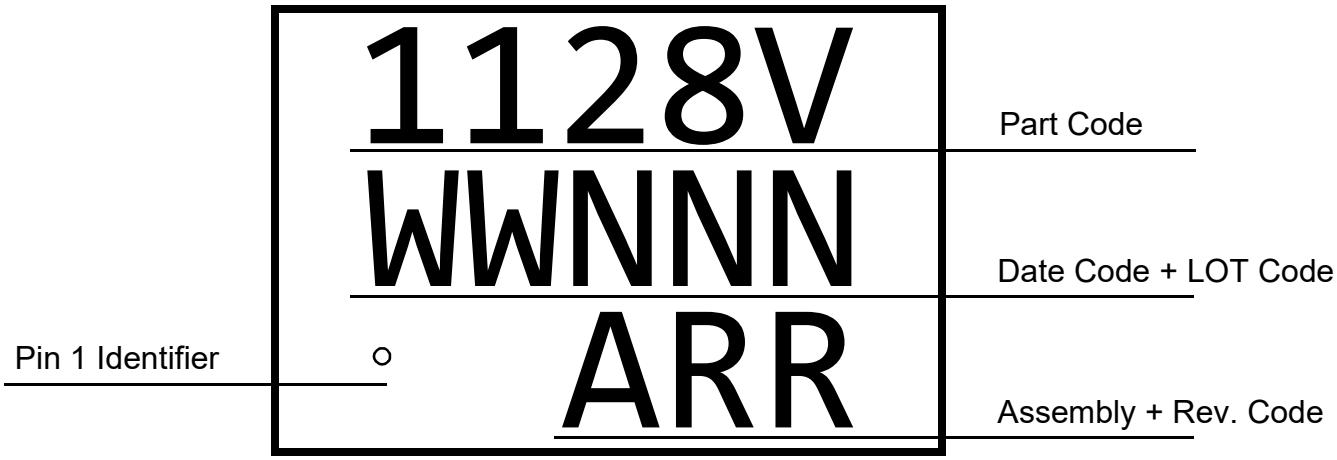

1128V - Part ID Field
WW - Date Code Field[1]
NNN - Lot Traceability Code Field[1]
A - Assembly Site Code Field [2]
RR - Part Revision Code Field[2]

Note 1: Each character in code field can be alphanumeric A-Z and 0-9
Note 2: Character in code field can be alphabetic A-Z

©2022 Renesas Electronics Corporation

Package Drawing and Dimensions

18 Lead TQFN Package 1.6 x 3 mm (Fused Lead)
JEDEC MO-220, Variation WCEE

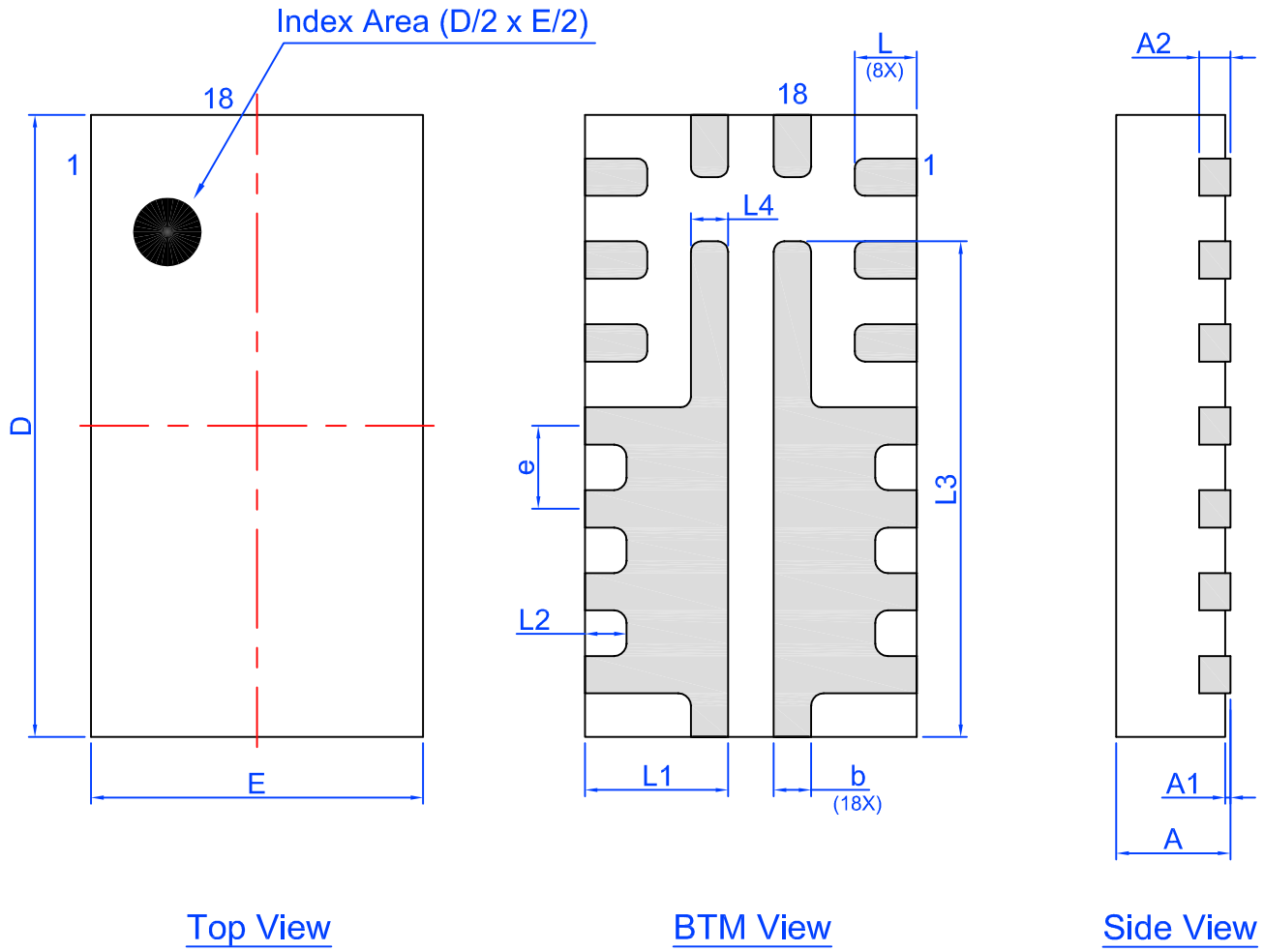

Unit: mm

Symbol	Min	Nom.	Max	Symbol	Min	Nom.	Max
A	0.50	0.55	0.60	D	2.95	3.00	3.05
A1	0.005	-	0.05	E	1.55	1.60	1.65
A2	0.10	0.15	0.20	L	0.25	0.30	0.35
b	0.13	0.18	0.23	L1	0.64	0.69	0.74
e	0.40 BSC			L2	0.15	0.20	0.25
L3	2.34	2.39	2.44	L4	0.13	0.18	0.23

©2022 Renesas Electronics Corporation

SLG59H1128V 18-pin STQFN PCB Landing Pattern

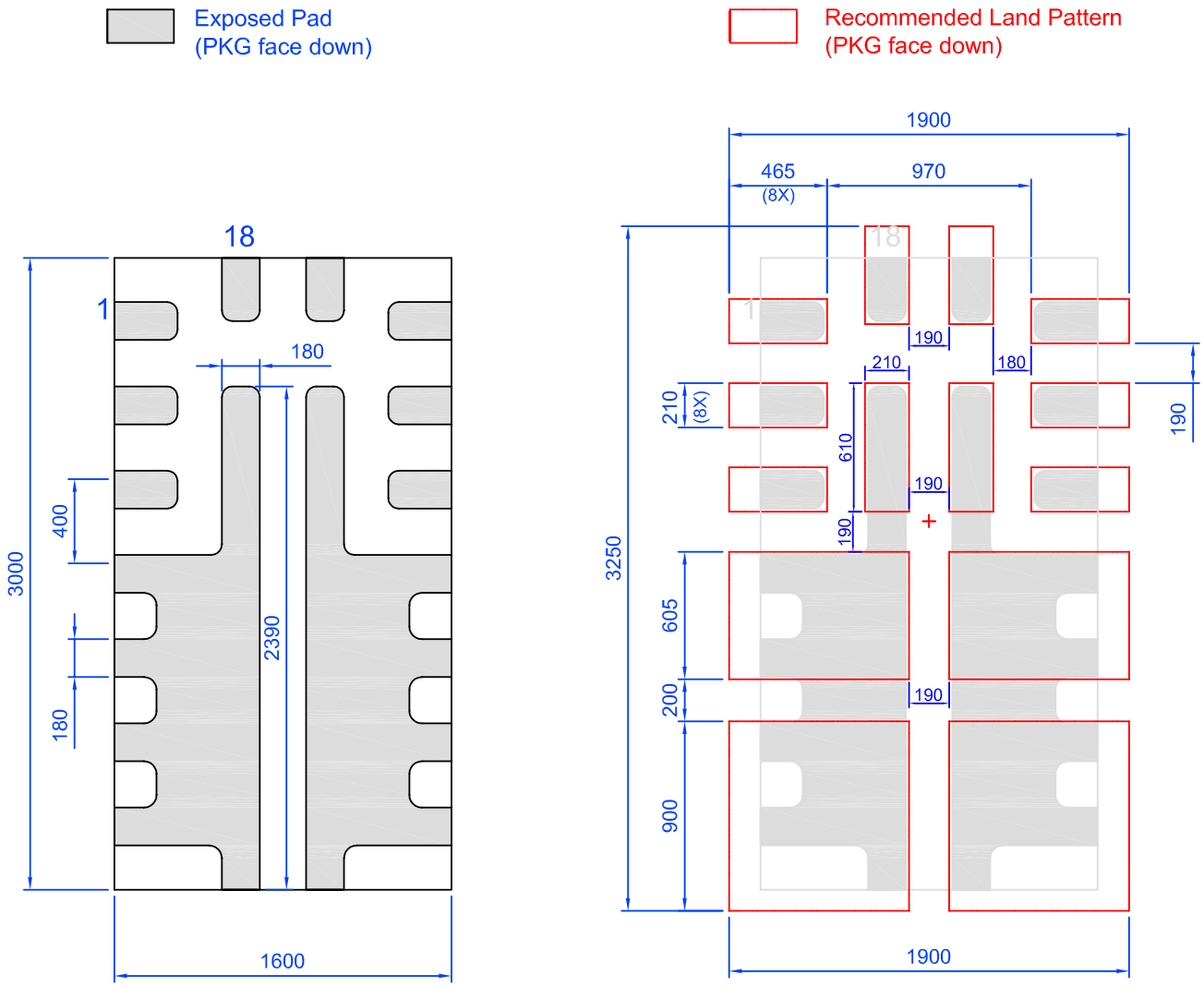

Note: All dimensions shown in micrometers (µm)

©2022 Renesas Electronics Corporation

Tape and Reel Specifications

Package Type	# of Pins	Nominal Package Size [mm]	Max Units		Reel & Hub Size [mm]	Leader (min)		Trailer (min)		Tape Width [mm]	Part Pitch [mm]
			per Reel	per Box		Pockets	Length [mm]	Pockets	Length [mm]		
STQFN 18L 1.6x3mm 0.4P FC Green	18	1.6 x 3 x 0.55	3,000	3,000	178 / 60	100	400	100	400	8	4

Carrier Tape Drawing and Dimensions

Package Type	Pocket BTM Length	Pocket BTM Width	Pocket Depth	Index Hole Pitch	Pocket Pitch	Index Hole Diameter	Index Hole to Tape Edge	Index Hole to Pocket Center	Tape Width
	A0	B0	K0	P0	P1	D0	E	F	W
STQFN 18L 1.6x3mm 0.4P FC Green	1.78	3.18	0.76	4	4	1.5	1.75	3.5	8

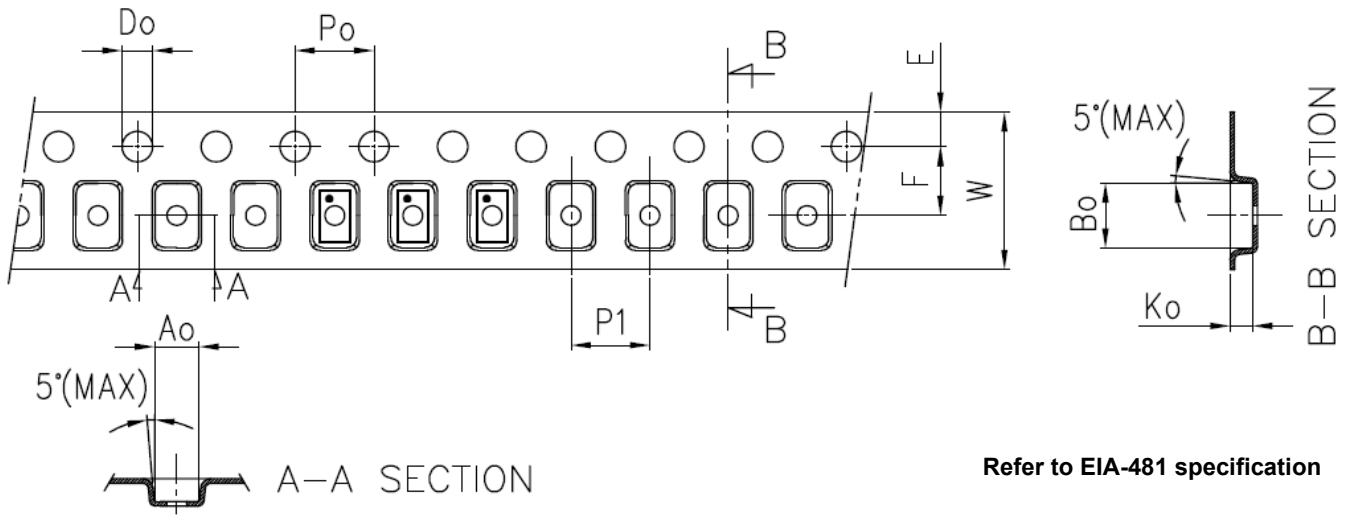

Refer to EIA-481 specification

Recommended Reflow Soldering Profile

Please see IPC/JEDEC J-STD-020: latest revision for reflow profile based on package volume of 2.64 mm^3 (nominal). More information can be found at www.jedec.org.

©2022 Renesas Electronics Corporation

Revision History

Date	Version	Change
2/2/2022	1.03	Updated Company name and logo Fixed typos
10/17/2019	1.02	Updated Applications Info SOA Description Updated HFET Evaluation Board image
12/12/2018	1.01	Updated style and formatting Updated Charts Added Scopeshots Added Layout Guidelines Fixed typos
2/24/2017	1.00	Production Release

©2022 Renesas Electronics Corporation

IMPORTANT NOTICE AND DISCLAIMER

RENESAS ELECTRONICS CORPORATION AND ITS SUBSIDIARIES (“RENESAS”) PROVIDES TECHNICAL SPECIFICATIONS AND RELIABILITY DATA (INCLUDING DATASHEETS), DESIGN RESOURCES (INCLUDING REFERENCE DESIGNS), APPLICATION OR OTHER DESIGN ADVICE, WEB TOOLS, SAFETY INFORMATION, AND OTHER RESOURCES “AS IS” AND WITH ALL FAULTS, AND DISCLAIMS ALL WARRANTIES, EXPRESS OR IMPLIED, INCLUDING, WITHOUT LIMITATION, ANY IMPLIED WARRANTIES OF MERCHANTABILITY, FITNESS FOR A PARTICULAR PURPOSE, OR NON-INFRINGEMENT OF THIRD PARTY INTELLECTUAL PROPERTY RIGHTS.

These resources are intended for developers skilled in the art designing with Renesas products. You are solely responsible for (1) selecting the appropriate products for your application, (2) designing, validating, and testing your application, and (3) ensuring your application meets applicable standards, and any other safety, security, or other requirements. These resources are subject to change without notice. Renesas grants you permission to use these resources only for development of an application that uses Renesas products. Other reproduction or use of these resources is strictly prohibited. No license is granted to any other Renesas intellectual property or to any third party intellectual property. Renesas disclaims responsibility for, and you will fully indemnify Renesas and its representatives against, any claims, damages, costs, losses, or liabilities arising out of your use of these resources. Renesas' products are provided only subject to Renesas' Terms and Conditions of Sale or other applicable terms agreed to in writing. No use of any Renesas resources expands or otherwise alters any applicable warranties or warranty disclaimers for these products.

(Rev.1.0 Mar 2020)

Corporate Headquarters

TOYOSU FORESIA, 3-2-24 Toyosu,
Koto-ku, Tokyo 135-0061, Japan
www.renesas.com

Contact Information

For further information on a product, technology, the most up-to-date version of a document, or your nearest sales office, please visit:
www.renesas.com/contact/

Trademarks

Renesas and the Renesas logo are trademarks of Renesas Electronics Corporation. All trademarks and registered trademarks are the property of their respective owners.

© 2021 Renesas Electronics Corporation. All rights reserved.