GlobTek, Inc.
www.globtek.com
186 Veterans Drive,
Northvale, NJ 07647
Tel. (201) 784-1000
Fax (201) 784-0111

Drawing Title: GTM96605-G2A1-T3, USB Power Delivery (PD) Source, ICT/ITE/Medical, Efficiency Level: USA DOE Level VI / Eco-design Directive 2009/125/EC, (EU) 2019/1782, Case Color/Style: GlobTek Black, Desktop/External, USB Adaptive Power Supply AC Adaptor, Input Rating: 100-240V~, 50-60Hz, IEC 60320/C14 , Output Rating: 60W, 5V, 5.8V, 9V, 12V, 15V, 15.1V, 20VV@4.6A, 4.6A, 4.4A, 4A, 3.6A, 3.6A, 3AA, Output Configuration: 1500 mm, 2C 20 + 3C 28/5C + Shield Cond, N/A, USB Type-C Connector, Shielded, Unibody, Rugged, Ferrite: None, GlobTek Black, GT Cord # C51824, Pin Out: +V: A4, A9, B4, B9, GND: A1, A12, B1, B12, CC1: A5, D+:A6, D-:A7, Blades/Input Cord: Not Applicable, Approvals: RCM; Morocco; PSE; VCCI; CE; China RoHS; RoHS; Level VI; Class I; EAC; Ukraine; CB 60601-1 2MOPP (6W max); CB 60950; CB 62368 (pending); ETL 62368; ETL; cETLus 60601-1 3rd; cETLus 60601; RCM; S-Mark 60950; cETLus 60950-1; UKCA; Conforms to 62368-1; LPS 60950; CCC; WEEE;

Model No. GTM96605-G2A1-T3

Part No./Ordering No. TR9CZ3000USBCG2R6BF2 | Rev C6

In Addition to GlobTek Inc.'s renewed ISO9001:2015 - Quality Management System Certification, GlobTek Inc. is now certified to:

ISO13485:2016 - Medical Devices Quality Management System Certification
ISO14001:2015 - Environmental Management System Certification

ISO Certificates are available online at https://www.globtek.com/iso-certificates/

The acceptance of this specification and use of the product described in this document indicates the acceptance and binding of the customer to Globtek TERMS AND CONDITIONS (attached to the end of this document), which supersede all other agreements, terms, and conditions (https://en.globtek.com/terms-and-conditions/).

The purchaser of this product (Customer) agrees that it is their sole responsibility to determine suitability/fitness of the product described in this specification for their application and to take precautions for protection against any hazards attendant to the handling and use of the product.

Footnote:

GlobTek Inc. will not be liable for the safety and performance of these power supplies/battery packs if unauthorized access and repair occurs. End user should consult applicable UL, CSA or EN standards for proper installation instruction.

Limitation of Use:

GlobTek products are intended for use with commercial, medical, and/or industrial equipment only. GlobTek product are not authorized for use as mission critical components in life support hazardous environment, nuclear or aircraft applications without prior written approval from the CEO of GlobTek Inc.
Contents of this document are subject to change without prior notice.

Customer Approval of Specification:

Please approve, sign and send back to GlobTek so we can complete order processing.
A delay in receipt of this form will delay delivery schedule.

Company Name:	Customer P/N:
Quote Number:	Date:
Authorized Representative Name:	Authorized Representative Signature:

PROPRIETARY INFORMATION
PROPRIETARY OF GLOBTEK, INC. ANY REPRODUCTION, DISCLOSURE OR USE OF THIS DRAWING, IN WHOLE OR IN PART, IS HEREBY PROHIBITED EXCEPT AS SPECIFIED IN WRITING BY GLOBTEK, INC. © GlobTek, Inc. 2018 - 2022
guest /08/23/2022 6:57:10 PM CLONED FROM TR9KZ3000USBCFG2R6B

GlobTek, Inc.
www.globtek.com
186 Veterans Drive,
Northvale, NJ 07647
Tel. (201) 784-1000
Fax (201) 784-0111

Drawing Title: GTM96605-G2A1-T3, USB Power Delivery (PD) Source, ICT/ITE/Medical, Efficiency Level: USA DOE Level VI / Eco-design Directive 2009/125/EC, (EU) 2019/1782, Case Color/Style: GlobTek Black, Desktop/External, USB Adaptive Power Supply AC Adaptor, Input Rating: 100-240V~, 50-60Hz, IEC 60320/C14 , Output Rating: 60W, 5V, 5.8V, 9V, 12V, 15V, 15.1V, 20VV@4.6A, 4.6A, 4.4A, 4A, 3.6A, 3.6A, 3AA, Output Configuration: 1500 mm, 2C 20 + 3C 28/5C + Shield Cond, N/A, USB Type-C Connector, Shielded, Unibody, Rugged, Ferrite: None, GlobTek Black, GT Cord # C51824, Pin Out: +V: A4, A9, B4, B9, GND: A1, A12, B1, B12, CC1: A5, D+:A6, D-:A7, Blades/Input Cord: Not Applicable, Approvals: RCM; Morocco; PSE; VCCI; CE; China RoHS; RoHS; Level VI; Class I; EAC; Ukraine; CB 60601-1 2MOPP (6W max); CB 60950; CB 62368 (pending); ETL 62368; ETL; cETLus 60601-1 3rd; cETLus 60601; RCM; S-Mark 60950; cETLus 60950-1; UKCA; Conforms to 62368-1; LPS 60950; CCC; WEEE;

Model No. GTM96605-G2A1-T3

Part No./Ordering No. TR9CZ3000USBCG2R6BF2 | Rev C6

REVISION HISTORY

REV	DESCRIPTION	SUB	DATE	APPROVED
C6	Update firmware version from GTF-BAAC-1 to GTF-D336-1	QA	06/21/2022	QA
C5	Change Firmware from GTF-B361-1 to GTF-BAAC-1	QA	08/27/2021	QA
C4	Change Firmware from GTF-E183 to GTF-B361-1	QA	04/22/2021	QA
C3	REVISE PLUG TO MEET USB REQUIREMENTS(SMALLER), REVISE LABEL TO ADD FIRMWARE VER, UPDATE OP V TO INCLUDE 15.1V POWER PROFILE, EFFECTIVE DATE CODE JULY 2020 AND LATER	DR	05/15/2020	QA
C2	ADDED FIRMWARE VERSION AND FIXED OP V AND I	DR	05/07/2020	QA
C1	Update 'CCC' approval with altitude up to 5000 m	QA	01/09/2020	QA
C	Update Grounding configuration to F2	QA	11/28/2018	QA
B	Update approvals	QA	06/11/2018	QA
A	Initial Release	svlas	06/04/2018	QA

POWER SUPPLY INFORMATION

TYPE:	Desktop/External
TECHNOLOGY:	USB Adaptive Power Supply AC Adaptor
FIRMWARE VER:	GTF-D336-1
CASE COLOR:	GlobTek Black
NAMEPLATE RATED INPUT:	100-240V~, 50-60Hz, 1.5A
INPUT CONFIG:	IEC 60320/C14
WATTS:	60.0
VOLTS OUT:	5V, 5.8V, 9V, 12V, 15V, 15.1V, 20V
CURRENT OUT (Amps):	4.6A, 4.6A, 4.4A, 4A, 3.6A, 3.6A, 3A
BLADE/CORD INCLUDED:	N/A Not Applicable
BLADE/CORD INSTALLED:	N/A :Not Applicable
INGRESS PROTECTION:	
GROUNDING CONFIGURATION:	(F2) Isolated Functional Earth for GTM96 series, Improved EMC
EFFICIENCY LEVEL:	USA DOE Level VI / Eco-design Directive 2009/125/EC, (EU) 2019/1782
OUTPUT CONFIGURATION:	1500 mm, 2C 20 + 3C 28/5C + Shield Cond, N/A, USB Type-C Connector, Shielded, Unibody, Rugged, Ferrite: None, GlobTek Black, GT Cord # C51824
OVERMOLDED:	Yes
OUTPUT CONNECTOR GENDER:	Male
CONNECTOR PIN OUT:	+V: A4, A9, B4, B9, GND: A1, A12, B1, B12, CC1: A5, D+:A6, D-:A7
LABEL SPECS:	ISO 15223 medical device compliant label + FW,L-1624
SPECIAL BARCODE LABEL MATERIAL:	No
PACK SPEC:	Standard DT, Cellular packaging, User manual
USER MANUAL:	809-DESKTOPUSERMANUAL on A4 paper

PROPRIETARY INFORMATION
PROPRIETARY OF GLOBTEK, INC. ANY REPRODUCTION, DISCLOSURE OR USE OF THIS DRAWING, IN WHOLE OR IN PART, IS HEREBY PROHIBITED EXCEPT AS SPECIFIED IN WRITING BY GLOBTEK, INC. © GlobTek, Inc. 2018 - 2022
guest /08/23/2022 6:57:10 PM CLONED FROM TR9KZ3000USBCFG2R6B

GlobTek, Inc.
www.globtek.com
186 Veterans Drive,
Northvale, NJ 07647
Tel. (201) 784-1000
Fax (201) 784-0111

Drawing Title: GTM96605-G2A1-T3, USB Power Delivery (PD) Source, ICT/ITE/Medical, Efficiency Level: USA DOE Level VI / Eco-design Directive 2009/125/EC, (EU) 2019/1782, Case Color/Style: GlobTek Black, Desktop/External, USB Adaptive Power Supply AC Adaptor, Input Rating: 100-240V~, 50-60Hz, IEC 60320/C14 , Output Rating: 60W, 5V, 5.8V, 9V, 12V, 15V, 15.1V, 20VV@4.6A, 4.6A, 4.4A, 4A, 3.6A, 3.6A, 3AA, Output Configuration: 1500 mm, 2C 20 + 3C 28/5C + Shield Cond, N/A, USB Type-C Connector, Shielded, Unibody, Rugged, Ferrite: None, GlobTek Black, GT Cord # C51824, Pin Out: +V: A4, A9, B4, B9, GND: A1, A12, B1, B12, CC1: A5, D+:A6, D-:A7, Blades/Input Cord: Not Applicable, Approvals: RCM; Morocco; PSE; VCCI; CE; China RoHS; RoHS; Level VI; Class I; EAC; Ukraine; CB 60601-1 2MOPP (6W max); CB 60950; CB 62368 (pending); ETL 62368; ETL; cETLus 60601-1 3rd; cETLus 60601; RCM; S-Mark 60950; cETLus 60950-1; UKCA; Conforms to 62368-1; LPS 60950; CCC; WEEE;

Model No. GTM96605-G2A1-T3

Part No./Ordering No. TR9CZ3000USBCG2R6BF2 | Rev C6

Notes/Modifications/Customizations (notes in this section supersede the values shown in the standard spec):

DIMENSIONS ARE IN MM UNLESS SPECIFIED OTHERWISE.

PROPRIETARY INFORMATION
PROPRIETARY OF GLOBTEK, INC. ANY REPRODUCTION, DISCLOSURE OR USE OF THIS DRAWING, IN WHOLE OR IN PART, IS HEREBY PROHIBITED EXCEPT AS SPECIFIED IN WRITING BY GLOBTEK, INC. © GlobTek, Inc. 2018 - 2022
guest /08/23/2022 6:57:10 PM CLONED FROM TR9KZ3000USBCFG2R6B

ELECTRICAL SPECIFICATIONS

USB Power Delivery Capabilities

Protocols supported:	USB Power Delivery (PD) 2.0/3.0 + PPS
Default Output State:	5V/2.0A
Advertised Power Data Objects (PDOs):	Standard option: 5V, 5.8V, 9V, 12V, 15V, 15.1V†, 20V PPS option: 5V, 9V, 15V, 20V, PPS (3.6-11V), PPS (3.6-16V), PPS (3.6-20V)
Output Current:	Refer to the 'Rating Table' for output current capability for each USB PD PDO. Models with -RA suffix have a female USB Type-C connector for use with a detachable USB Type-C cable. If no E-marked cable is detected, the maximum current is limited to 3A. Models without a suffix have a captive 5A rated cable and can always deliver the full current per the 'Rating Table'.
Note 1:	Custom fixed PDOs available upon request. PDO1 must be 5V. PDO2 through PDO7 may be set to any custom voltage from 3.6V to 20V, with a step size of 100mV.
Note 2:	In critical applications, the use of a non-authorized USB PD power adapter may pose a substantial risk. The power adapter's identity may be checked and validated prior to PD contract negotiation by using USB PD Vendor Defined Messages (VDMs). Please see our article Product Security and Risk Mitigation for USB Power Delivery (PD) Based Systems for additional information.

Qualcomm Quick Charge™ Capabilities

Protocols supported:	Quick Charge™ 2.0/3.0
Default Output State:	5V/2.0A

HVDCP Class B Profiles:

D+	D-	Output
0.6V	GND	5.0V/4.6A
3.3V	0.6V	9.0V/4.4A
0.6V	0.6V	12V/4.0A
3.3V	3.3V	20V/3.0A
0.6V	3.3V	Continuous mode. Adjust from 3.6V to 20V in 200mV steps.

Output Current:

Models with -RA suffix are limited to 3A, as Quick Charge does not support USB PD E-marked cables.

Models without a suffix can deliver full rated Quick Charge current.

Input

Specified: 90-264VAC, Nameplate: 100-240VAC
100% rated load current for 90-264VAC

PROPRIETARY INFORMATION
PROPRIETARY OF GLOBTEK, INC. ANY REPRODUCTION, DISCLOSURE OR USE OF THIS DRAWING, IN WHOLE OR IN PART, IS HEREBY PROHIBITED EXCEPT AS SPECIFIED IN WRITING BY GLOBTEK, INC. © GlobTek, Inc. 2018 - 2022
guest /08/23/2022 6:57:10 PM CLONED FROM TR9KZ3000USBCFG2R6B

Input Voltage:	85% rated load current for 85-264VAC 100% rated load current for 110-370VDC
Input Frequency:	Specified: 47-63Hz, Nameplate: 50-60Hz
No Load Input Power:	< 75mW @ 230VAC (EU CoC Tier 2 compliant)
Inrush Current:	< 30A @ 115VAC, < 60A @ 230VAC (cold start)
Efficiency:	DoE Efficiency Level VI and CoC Tier 2 compliant (tested according to DoE 10 CFR Part 430, Subpart B, Appendix Z)

Output

Turn-on Delay:	< 1 second (full load, 115VAC)
Output Regulation	± 4% max. (measured at the end of output cord)
Line Regulation:	± 0.5% typ. (measured at the end of output cord)
Ripple:	100mV max. (using a 47µF low-ESR electrolytic cap + 0.1µF ceramic cap, measured @ 20MHz BW, at the output connector)
Transient Response:	5% max. deviation, 1ms max. recovery time (with 40 to 70% load step),
Hold-up Time:	8ms typ. (full load, nominal line voltage)
Power Indicator:	Green LED

Protections

Input Protection:	MOV transient suppressor, input line fusing
Over-Voltage Protection:	Level 1: 110-130%, Auto-recovery, adaptive to selected PDO/QC profile Level 2: 25V (max), Latched off, cycle AC to reset
Over-Current Protection:	110-140%, Auto-recovery, adaptive to selected PDO/QC profile
Short-Circuit Protection:	Auto-recovery
Over-Temperature Protection:	Auto-recovery

Environmental

MTBF:	1,500,000 hours @ 25°C ambient, full load (Telcordia SR-332, Issue 3)
Operating Temperature:	-10°C to 40°C (full load) -10°C to 50°C (80% load)
Storage Temperature:	-30°C to 80°C
Humidity:	0% to 95% relative humidity, non-condensing
Altitude	5000m
Cooling:	Convection
RoHS:	Complies with EU 2011/65/EU and China SJ/T 11363-2006

Safety

Dielectric Withstand Voltage:	4000VAC or 5656VDC from input to output
Touch Current:	3-conductor models: 20µA max. 2-conductor models: 65µA max.

PROPRIETARY INFORMATION
PROPRIETARY OF GLOBTEK, INC. ANY REPRODUCTION, DISCLOSURE OR USE OF THIS DRAWING, IN WHOLE OR IN PART, IS HEREBY PROHIBITED EXCEPT AS SPECIFIED IN WRITING BY GLOBTEK, INC. © GlobTek, Inc. 2018 - 2022
guest /08/23/2022 6:57:10 PM CLONED FROM TR9KZ3000USBCFG2R6B

Earth Leakage Current	300µA max. NC/SFC (N/A for 2-conductor input models)
Means of Protection:	2 x MOPP
Output Isolation Options:	-T2/R2 suffix: Class II 2-conductor (C8/C18 inlet or interchangeable blades) -T3/R3 suffix: Class II, with functional earth (FE) (C6/C14 inlet or interchangeable blades) Class I, earth wire connected directly to output negative (C6/C14 inlet or interchangeable blades)
Note 3:	Review output isolation options with our article: PSU Isolation and Identify

EMC

Applicable Standards:	Medical: EN 60601-1-2 (4e) Emissions: EN55032, EN61000-6-3, EN61000-6-4 Immunity: EN55024, EN61000-6-1 (4e), EN61000-6-2 (4e)
Conducted Emissions:	Class B, FCC Part 15, Class B (with resistive load)
Radiated Emissions:	Class B, FCC Part 15, Class B (with resistive load)
Harmonic Current Voltage Distortion:	EN61000-3-2, Class A
Voltage Fluctuations/Flicker:	EN61000-3-3
Electrostatic Discharge (ESD) Immunity:	EN61000-4-2, 10KV contact discharge, 18KV air discharge, Criterion A
Radiated RF Immunity:	EN61000-4-3, 10V/m @ 80-1000MHz, 3V/m @ 1-2.7GHz, 80% 1KHz AM, Criterion A
EFT/Burst Immunity:	EN61000-4-4, 2KV/100KHz., Criterion A; 4KV/100KHz, Criterion B
Line Surge Immunity:	EN61000-4-5, 2KV differential, 2KV common-mode, Criterion A; 4KV common-mode, Criterion B
Conducted RF Immunity:	EN61000-4-6, 3VRMS, 80% 1KHz AM, Criterion A
Power Frequency Magnetic Field Immunity:	EN61000-4-8, 30A/m, Criterion A
Voltage Dip Immunity:	EN61000-4-11, Criterion B

Enclosure

Housing:	High impact plastic, 94V0 polycarbonate, non-vented Desktop T2/T3: C6, C8, C14, or C18 IEC inlet Hybrid (desktop or wall plug-in): Class I or Class II input No suffix: Captive 1.5m shielded USB Type-C cable -RA suffix: Female USB Type-C connector integrated into housing
Markings:	Adhesive backed label or laser engraving

Prevention of Unauthorized Use

	In critical applications, the use of a non-authorized USB PD power adapter may pose a substantial risk to system safety or performance.
USB Power Delivery:	The power adapter's identity may be checked and validated prior to PD contract negotiation by use of USB PD Vendor Defined Messages (VDMs). The power adapter will respond to a USB PD “Discover Identity” VDM with 0x4754 in the “ProductID” field. Additionally, non-standard 5.8V and 15.1V PDOs are included. Host systems may be designed to reject a power adapter which does not contain one of these PDOs.

PROPRIETARY INFORMATION
PROPRIETARY OF GLOBTEK, INC. ANY REPRODUCTION, DISCLOSURE OR USE OF THIS DRAWING, IN WHOLE OR IN PART, IS HEREBY PROHIBITED EXCEPT AS SPECIFIED IN WRITING BY GLOBTEK, INC. © GlobTek, Inc. 2018 - 2022
guest /08/23/2022 6:57:10 PM CLONED FROM TR9KZ3000USBCFG2R6B

Note 4:	These measures do not guarantee a secure implementation, and are only suggested as a method of risk mitigation.
Note 5:	Please see our article Product Security and Risk Mitigation for USB Power Delivery (PD) Based Systems for additional information.

Special Options

Non-standard - Contact GlobTek

1. Custom housing and output cord colors
2. Custom fixed output cord length, for applicable models (1m, 2m, 3m lengths,etc.)
3. Custom markings and marking methods
4. Custom USB PD PDOs: Output voltages selectable between 5V and 20V, in 100mV increments
5. USB Micro-B connector for Quick Charge™-only applications
6. Quick Charge™ 4.0/4.0+ support

† 15.1V PDO is standard on units with date codes after Sept-10-2019.
†† VDM functionality is standard on units with date codes after Sept-10-2019.

TO ADDRESS SYSTEM-LEVEL EMI CONCERNS, FERRITE CHOKES/BEADS MAY BE ADDED/REVISED UPON REQUEST. A SAMPLE KIT OF GLOBTEK'S STANDARD FERRITES IS AVAILABLE UNDER GLOBTEK P/N: EMI-MITIGATION-KIT1

FOR ADDITIONAL INFORMATION, PLEASE READ OUR WHITE PAPER AT:
https://en.globtek.com/technical-articles/ferrite-kit-radiated-emi-suppression-kit-for-globtek-power-supplies-cable-assemblies

PROPRIETARY INFORMATION
PROPRIETARY OF GLOBTEK, INC. ANY REPRODUCTION, DISCLOSURE OR USE OF THIS DRAWING, IN WHOLE OR IN PART, IS HEREBY PROHIBITED EXCEPT AS SPECIFIED IN WRITING BY GLOBTEK, INC. © GlobTek, Inc. 2018 - 2022
guest /08/23/2022 6:57:10 PM CLONED FROM TR9KZ3000USBCFG2R6B

GlobTek, Inc.
www.globtek.com
186 Veterans Drive,
Northvale, NJ 07647
Tel. (201) 784-1000
Fax (201) 784-0111

Drawing Title: GTM96605-G2A1-T3, USB Power Delivery (PD) Source, ICT/ITE/Medical, Efficiency Level: USA DOE Level VI / Eco-design Directive 2009/125/EC, (EU) 2019/1782, Case Color/Style: GlobTek Black, Desktop/External, USB Adaptive Power Supply AC Adaptor, Input Rating: 100-240V~, 50-60Hz, IEC 60320/C14 , Output Rating: 60W, 5V, 5.8V, 9V, 12V, 15V, 15.1V, 20VV@4.6A, 4.6A, 4.4A, 4A, 3.6A, 3.6A, 3AA, Output Configuration: 1500 mm, 2C 20 + 3C 28/5C + Shield Cond, N/A, USB Type-C Connector, Shielded, Unibody, Rugged, Ferrite: None, GlobTek Black, GT Cord # C51824, Pin Out: +V: A4, A9, B4, B9, GND: A1, A12, B1, B12, CC1: A5, D+:A6, D-:A7, Blades/Input Cord: Not Applicable, Approvals: RCM; Morocco; PSE; VCCI; CE; China RoHS; RoHS; Level VI; Class I; EAC; Ukraine; CB 60601-1 2MOPP (6W max); CB 60950; CB 62368 (pending); ETL 62368; ETL; cETLus 60601-1 3rd; cETLus 60601; RCM; S-Mark 60950; cETLus 60950-1; UKCA; Conforms to 62368-1; LPS 60950; CCC; WEEE;

Model No. GTM96605-G2A1-T3

Part No./Ordering No. TR9CZ3000USBCG2R6BF2 | Rev C6

3D File Download https://www.globtek.com/dl/GTM96605-T3.igs

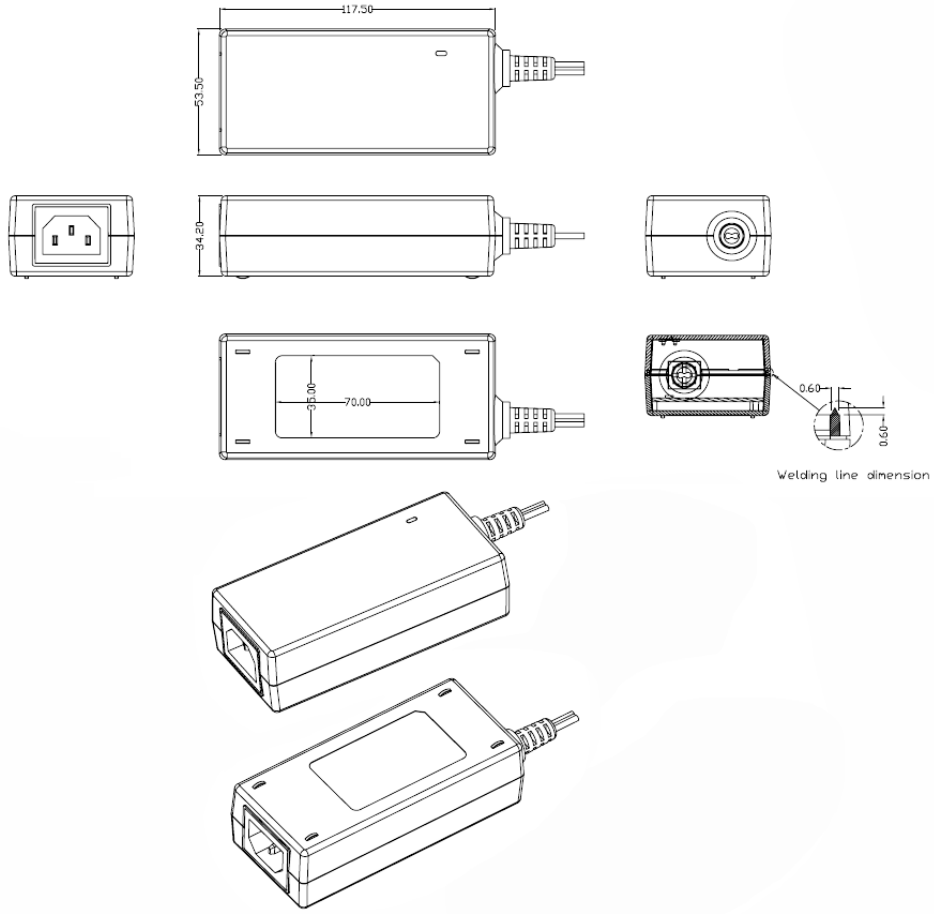

Drawing above is model with output cord

PROPRIETARY INFORMATION
PROPRIETARY OF GLOBTEK, INC. ANY REPRODUCTION, DISCLOSURE OR USE OF THIS DRAWING, IN WHOLE OR IN PART, IS HEREBY PROHIBITED EXCEPT AS SPECIFIED IN WRITING BY GLOBTEK, INC. © GlobTek, Inc. 2018 - 2022
guest /08/23/2022 6:57:10 PM CLONED FROM TR9KZ3000USBCFG2R6B

GlobTek, Inc.
www.globtek.com
186 Veterans Drive,
Northvale, NJ 07647
Tel. (201) 784-1000
Fax (201) 784-0111

Drawing Title: GTM96605-G2A1-T3, USB Power Delivery (PD) Source, ICT/ITE/Medical, Efficiency Level: USA DOE Level VI / Eco-design Directive 2009/125/EC, (EU) 2019/1782, Case Color/Style: GlobTek Black, Desktop/External, USB Adaptive Power Supply AC Adaptor, Input Rating: 100-240V~, 50-60Hz, IEC 60320/C14 , Output Rating: 60W, 5V, 5.8V, 9V, 12V, 15V, 15.1V, 20VV@4.6A, 4.6A, 4.4A, 4A, 3.6A, 3.6A, 3AA, Output Configuration: 1500 mm, 2C 20 + 3C 28/5C + Shield Cond, N/A, USB Type-C Connector, Shielded, Unibody, Rugged, Ferrite: None, GlobTek Black, GT Cord # C51824, Pin Out: +V: A4, A9, B4, B9, GND: A1, A12, B1, B12, CC1: A5, D+:A6, D-:A7, Blades/Input Cord: Not Applicable, Approvals: RCM; Morocco; PSE; VCCI; CE; China RoHS; RoHS; Level VI; Class I; EAC; Ukraine; CB 60601-1 2MOPP (6W max); CB 60950; CB 62368 (pending); ETL 62368; ETL; cETLus 60601-1 3rd; cETLus 60601; RCM; S-Mark 60950; cETLus 60950-1; UKCA; Conforms to 62368-1; LPS 60950; CCC; WEEE;

Model No. GTM96605-G2A1-T3

Part No./Ordering No. TR9CZ3000USBCG2R6BF2 | Rev C6

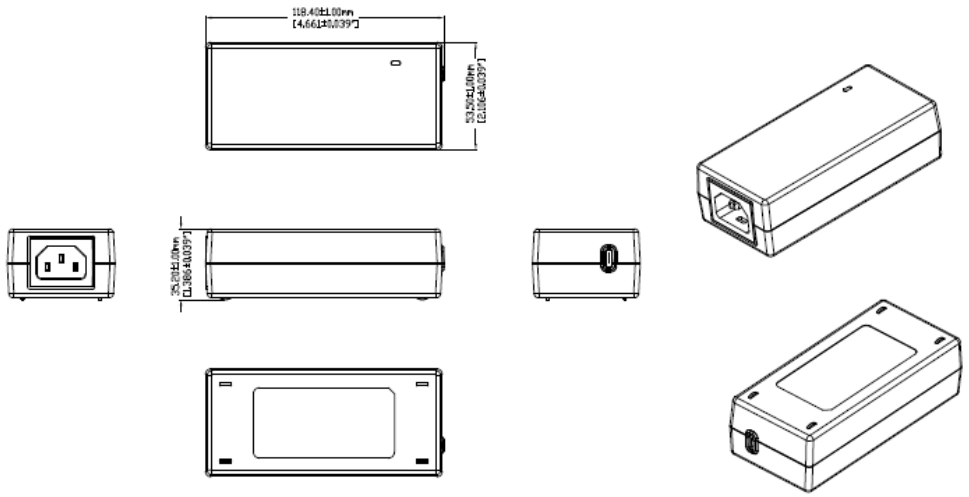

Drawing above is model with integrated USBC connector (suffix -RA)

PROPRIETARY INFORMATION
PROPRIETARY OF GLOBTEK, INC. ANY REPRODUCTION, DISCLOSURE OR USE OF THIS DRAWING, IN WHOLE OR IN PART, IS HEREBY PROHIBITED EXCEPT AS SPECIFIED IN WRITING BY GLOBTEK, INC. © GlobTek, Inc. 2018 - 2022
guest /08/23/2022 6:57:10 PM CLONED FROM TR9KZ3000USBCFG2R6B

DERATING CURVE

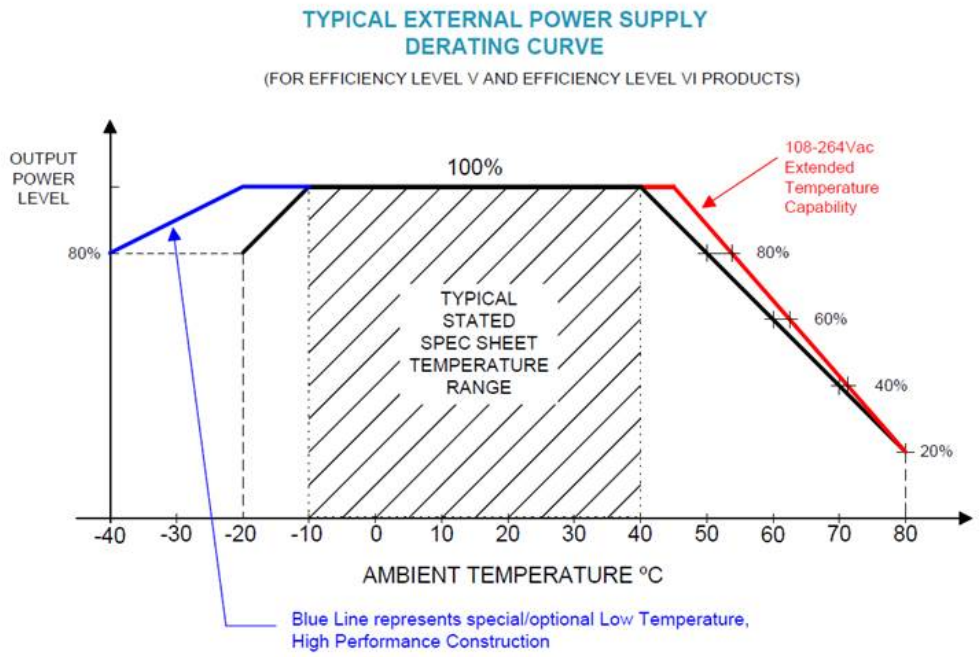

PROPRIETARY INFORMATION

PROPRIETARY OF GLOBTEK, INC. ANY REPRODUCTION, DISCLOSURE OR USE OF THIS DRAWING, IN WHOLE OR IN PART, IS HEREBY PROHIBITED EXCEPT AS SPECIFIED IN WRITING BY GLOBTEK, INC. © GlobTek, Inc. 2018 - 2022

guest /08/23/2022 6:57:10 PM CLONED FROM TR9KZ3000USBCFG2R6B

INPUT CONFIGURATION

(F2) Isolated Functional Earth for GTM96 series, Improved EMC

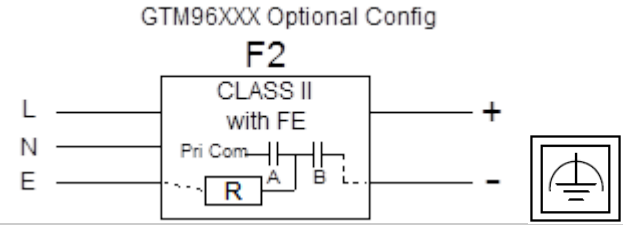

Alternate grounding configurations available upon request.

Blades/Cord Included:N/A:Not Applicable

Blades/Cord Installed:N/A:Not Applicable

IEC 60320/C14 AC Inlet Connector, Class I, Earth Ground

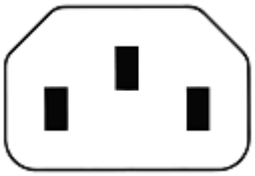

Mates with IEC 60320/C13 Plug

Optional Locking IEC60320 Receptable and cord option available on some models by request.:

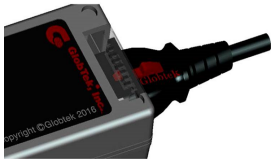

Standard International IEC 320/C13 Cordsets

Below are standard cordsets which are "not included" (unless stated above); these can be purchased separately or packaged with the power supply. Contact your Sales Engineer if the style required is not shown below. Many more available in different lengths, colors or cable material.

PROPRIETARY INFORMATION
PROPRIETARY OF GLOBTEK, INC. ANY REPRODUCTION, DISCLOSURE OR USE OF THIS DRAWING, IN WHOLE OR IN PART, IS HEREBY PROHIBITED EXCEPT AS SPECIFIED IN WRITING BY GLOBTEK, INC. © GlobTek, Inc. 2018 - 2022
guest /08/23/2022 6:57:10 PM CLONED FROM TR9KZ3000USBCFG2R6B

Stock Power Supply Cords

Part Number/ Link	Country	Plug	Termination	Length (mm)	(Ft)
3021457F701(R)	N. American (Type B)	NEMA 5-15P	IEC 320/C13	2150	7
1191068F0701(R)	N. American (Type B)	NEMA 5-15P Hospital	IEC 320/C13	2459	8
2194272M5701-T(R)	Argentina (Type I)	IRAM 2073	IEC 320/C13	2500	8
5502022M5701A(R)	Australian (Type I)	AS3112 / 3 PRONG	IEC 320/C13	2500	8
204B4272M5701(R)	Brazil (Type N)	BRAZIL	IEC 320/C13	2500	8
6023602M5701(R)	China (Type I)	CCC GR2099	IEC 320/C13	2500	8
G8014272M5701(R)	Danish (Type K)	AFSNIT SECTION 107-2-D1	IEC 320/C13	2500	8
23144272M5701-T(R)	Europe (Type E)	CEE 7/7	IEC 320/C13	2500	8
23134272M5701EUKR(R)	Europe/Korea Combo (Type E)	CEE 7/7 / KSC8305	IEC 320/C13	2500	8
205IN4272M5701(R)	India (Type D)	India IS 1293 (also known as IA16A3 or BS546)	IEC 320/C13	2500	8
208IN4272M5701(R)	India (Type M)	India IS 1293 (also known as IA16A3 or BS546)	IEC320/C13	2500	8
377C4272M5701(R)	Israel (Type H)	ISL 377C	IEC 320/C13	2500	8
23024272M5701(R)	Italy (Type L)	CEI 23-16/VII	IEC 320/C13	2500	8
3003339F701(R) [3x1.25mm2] 3003068F2701-HK(R) [3 x 2.0mm2]	Japan (Type B)	JIS 8303 / 3 PINS	IEC 320/C13	2500	8
302J115J6F0701J(R)	North America / Japan (Type B – 12A)	NEMA 5-15P (cULus approved), Japan JIS C 8303 (PSE Approved)	IEC 320/C13	1830	6
302J104J6F0701J(R)	North America / Japan (Type B – 15A)	NEMA 5-15P (cULus approved), Japan JIS C 8303 (PSE Approved)	IEC 320/C13	1830	6
302JT104J9F0701JT(R)	North America / Japan / Taiwan (Type B – 15A)	NEMA 5-15P (cULus approved), Japan JIS C 8303 (PSE Approved), Taiwan CNS 6797 (BSMI Approved)	IEC 320/C13	2800	9
2313K3432M5701(R)	Korea (Type F)	KS C 8305	IEC 320/C13	2500	8

PROPRIETARY INFORMATION
PROPRIETARY OF GLOBTEK, INC. ANY REPRODUCTION, DISCLOSURE OR USE OF THIS DRAWING, IN WHOLE OR IN PART, IS HEREBY PROHIBITED EXCEPT AS SPECIFIED IN WRITING BY GLOBTEK, INC. © GlobTek, Inc. 2018 - 2022
guest /08/23/2022 6:57:10 PM CLONED FROM TR9KZ3000USBCFG2R6B

5804272M5701(R)	Russia (Type F)	GOST 7396	IEC 320/C13	2500	8
2084272M5701(R)	South Africa (Type M)	South Africa SABS164-1 (16A type)	IEC 320/C13	2500	8
23214272M5701(R)	Switzerland (Type J)	SEV 1011	IEC 320/C13	2500	8
3003322M5701(R)	Taiwan (Type B)	BSMI	IEC 320/C13	2500	8
6363762M5701(R)	Thailand (Type O)	TIS 166-2549	IEC 320/C13	2500	8
PZ0800100-2M5BK13H(R	UK, Hong Kong,Singapore, Gulf States (Type G)	BS 1363A	IEC 320/C13	2500	8
7055002M5701A(R)	International	IEC 320 C14-C13	IEC 320/C13	2500	8

PROPRIETARY INFORMATION

PROPRIETARY OF GLOBTEK, INC. ANY REPRODUCTION, DISCLOSURE OR USE OF THIS DRAWING, IN WHOLE OR IN PART, IS HEREBY PROHIBITED EXCEPT AS SPECIFIED IN WRITING BY GLOBTEK, INC. © GlobTek, Inc. 2018 - 2022

guest /08/23/2022 6:57:10 PM CLONED FROM TR9KZ3000USBCFG2R6B

GlobTek, Inc.
www.globtek.com
186 Veterans Drive,
Northvale, NJ 07647
Tel. (201) 784-1000
Fax (201) 784-0111

Drawing Title: GTM96605-G2A1-T3, USB Power Delivery (PD) Source, ICT/ITE/Medical, Efficiency Level: USA DOE Level VI / Eco-design Directive 2009/125/EC, (EU) 2019/1782, Case Color/Style: GlobTek Black, Desktop/External, USB Adaptive Power Supply AC Adaptor, Input Rating: 100-240V~, 50-60Hz, IEC 60320/C14 , Output Rating: 60W, 5V, 5.8V, 9V, 12V, 15V, 15.1V, 20VV@4.6A, 4.6A, 4.4A, 4A, 3.6A, 3.6A, 3AA, Output Configuration: 1500 mm, 2C 20 + 3C 28/5C + Shield Cond, N/A, USB Type-C Connector, Shielded, Unibody, Rugged, Ferrite: None, GlobTek Black, GT Cord # C51824, Pin Out: +V: A4, A9, B4, B9, GND: A1, A12, B1, B12, CC1: A5, D+:A6, D-:A7, Blades/Input Cord: Not Applicable, Approvals: RCM; Morocco; PSE; VCCI; CE; China RoHS; RoHS; Level VI; Class I; EAC; Ukraine; CB 60601-1 2MOPP (6W max); CB 60950; CB 62368 (pending); ETL 62368; ETL; cETLus 60601-1 3rd; cETLus 60601; RCM; S-Mark 60950; cETLus 60950-1; UKCA; Conforms to 62368-1; LPS 60950; CCC; WEEE;

Model No. GTM96605-G2A1-T3

Part No./Ordering No. TR9CZ3000USBCG2R6BF2 | Rev C6

OUTPUT CORD AND CONNECTOR: USB00016/C51824

ACTUAL CONNECTORS, OVERMOLDS, FERRITES MAY VARY SLIGHTLY FROM THE PICTURE BELOW

CABLE TYPE	N/A
CABLE LENGTH (mm)	1500
CABLE TOLERANCE (mm)	±50
WIRE GAUGE (AWG)	2C 20 + 3C 28
CONDUCTORS	5C + Shield
HANK DIMENSION (mm)	80+/-20
CABLE / CONNECTOR OVERMOLD COLOR	GlobTek Black
FERRITE TYPE / DIMENSION	None
FERRITE # OF TURNS(Definition)	N/A
FERRITE DIMENSION FROM STRAIN RELIEF	N/A
FERRITE DIMENSION FROM PLUG	N/A
PLUG TYPE	USB Type-C Connector, Shielded, Unibody, Rugged
OUTPUT CONNECTOR GENDER	Male
OVERMOLDED	Yes
OVER MOLD ORIENTATION	Straight
CONNECTOR PIN OUT:	+V: A4, A9, B4, B9, GND: A1, A12, B1, B12, CC1: A5, D+:A6, D-:A7

ADDITIONAL REQUIREMENTS

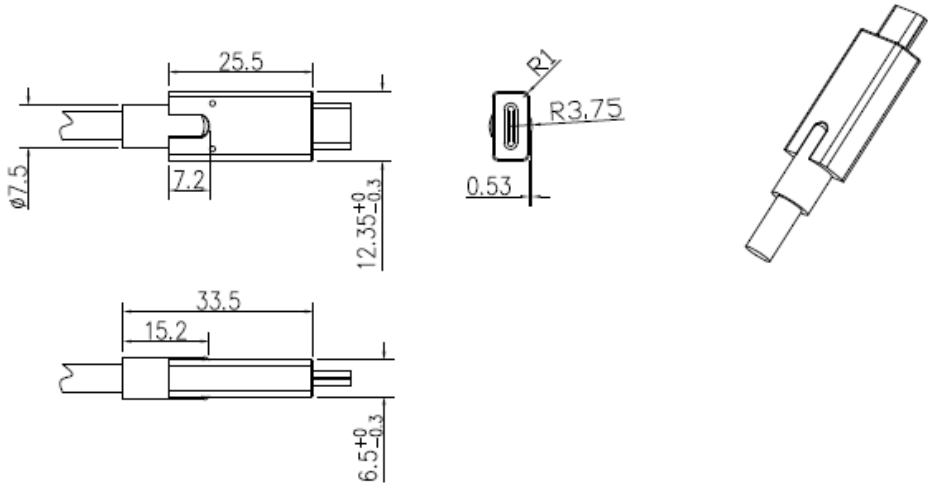

PROPRIETARY INFORMATION
PROPRIETARY OF GLOBTEK, INC. ANY REPRODUCTION, DISCLOSURE OR USE OF THIS DRAWING, IN WHOLE OR IN PART, IS HEREBY PROHIBITED EXCEPT AS SPECIFIED IN WRITING BY GLOBTEK, INC. © GlobTek, Inc. 2018 - 2022
guest /08/23/2022 6:57:10 PM CLONED FROM TR9KZ3000USBCFG2R6B

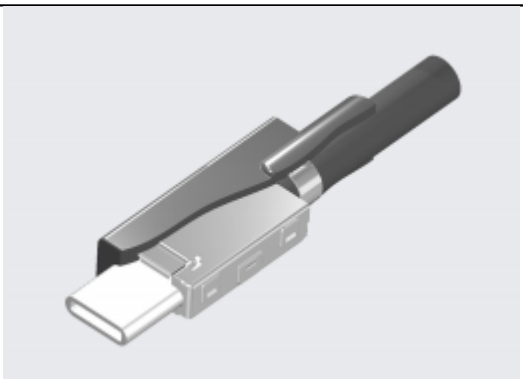

GlobTek's USB00016 USB Type C connector is:

- Shielded for improved EMI performance
- Unibody plug and PCB cover with integrated cable clamp provide superior ruggedability and prevents breakage as may be seen on simple USB C cables with separate plug and PCB components
- Cable clamp with overmold provides for very high pull force withstand
- More robust in terms of bending protection after plug is insert
- Less component stress during the manufacturing process like first step overmolding
- Superior cosmetic appearance

ADDITIONAL OUTPUT PLUG OPTIONS ARE AVAILABLE AT https://www.globtek.com/connectors/
STANDARD PLUGS AND CONNECTORS CAN BE SEEN ONLINE AT https://www.globtek.com/connectors/
CALCULATE VOLTAGE REGULATION/DROP WITH OUR ONLINE CALCULATOR: https://en.globtek.com/output-cable-regulation-calculator/

PROPRIETARY INFORMATION
PROPRIETARY OF GLOBTEK, INC. ANY REPRODUCTION, DISCLOSURE OR USE OF THIS DRAWING, IN WHOLE OR IN PART, IS HEREBY PROHIBITED EXCEPT AS SPECIFIED IN WRITING BY GLOBTEK, INC. © GlobTek, Inc. 2018 - 2022
guest /08/23/2022 6:57:10 PM CLONED FROM TR9KZ3000USBCFG2R6B

OUTPUT CONNECTOR HOOK UP

TO ADDRESS SYSTEM-LEVEL EMI CONCERNS, FERRITE CHOKES/BEADS MAY BE ADDED/REVISED UPON REQUEST. A SAMPLE KIT OF GLOBTEK'S STANDARD FERRITES IS AVAILABLE UNDER GLOBTEK P/N: EMI-MITIGATION-KIT1

FOR ADDITIONAL INFORMATION, PLEASE READ OUR WHITE PAPER AT:
https://en.globtek.com/technical-articles/ferrite-kit-radiated-emi-suppression-kit-for-globtek-power-supplies-cable-assemblies

PROPRIETARY INFORMATION
PROPRIETARY OF GLOBTEK, INC. ANY REPRODUCTION, DISCLOSURE OR USE OF THIS DRAWING, IN WHOLE OR IN PART, IS HEREBY PROHIBITED EXCEPT AS SPECIFIED IN WRITING BY GLOBTEK, INC. © GlobTek, Inc. 2018 - 2022
guest /08/23/2022 6:57:10 PM CLONED FROM TR9KZ3000USBCFG2R6B

LABEL:L-1624

LABEL P/N:	ISO 15223 medical device compliant label + FW
MATERIAL:	Flat Thermal Transfer, Imprintable, Polyester Label and/or Pad Printed and/or Molded, and/or Laser Engraved in the case
BACKGROUND COLOR:	Black if housing is Black, White or Silver if housing is White or Gray.
TEXT COLOR:	White or Silver if label is Black Background for Black housing. Black if label is White or Silver background and Housing is White or Gray.
LABEL WIDTH (mm):	
LABEL HEIGHT (mm):	
SPECIAL BARCODE LABEL MATERIAL:	No

Below is the minimum information which will appear on the label. NOTE: in the logo area additional/actual positioning of symbols and text is subjected to change as per agency updates/requirements or additional model approvals become available.
Agency logos may be in Regulatory Certifications/Label Markings area on the label or molded into the case housing outside the label area. Information will be shown via Label and/or Pad Printed and/or Molded in the case.

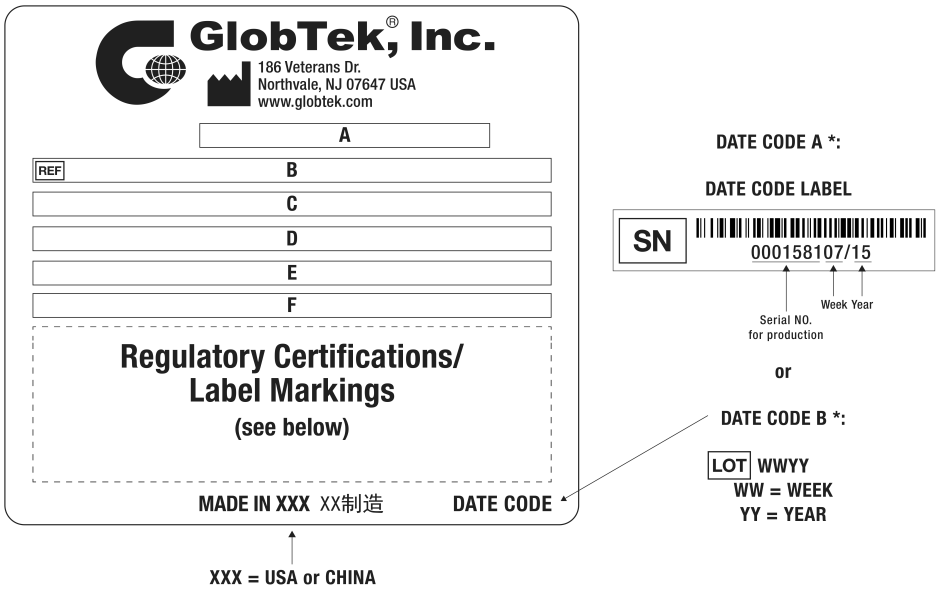

A=USB Power Delivery (PD) Source, ICT/ITE/Medical
B=P/N: (料号) TR9CZ3000USBCG2R6BF2
C=Model (型号) GTM96605-G2A1-T3
D=Input (输入)100-240V~, 50-60Hz, 1.5A

PROPRIETARY INFORMATION
PROPRIETARY OF GLOBTEK, INC. ANY REPRODUCTION, DISCLOSURE OR USE OF THIS DRAWING, IN WHOLE OR IN PART, IS HEREBY PROHIBITED EXCEPT AS SPECIFIED IN WRITING BY GLOBTEK, INC. © GlobTek, Inc. 2018 - 2022
guest /08/23/2022 6:57:10 PM CLONED FROM TR9KZ3000USBCFG2R6B

E=Output (输出) 5V ⎓ 4.6A
5.8V ⎓ 4.6A
9V ⎓ 4.4A
12V ⎓ 4A
15V ⎓ 3.6A
15.1V ⎓ 3.6A
20V ⎓ 3A
F=GTF-D336-1

AGENCY ONLINE DOCUMENTS	http://www.globtek.info/certs/GTM96605-GEN2/
CE EC-Declaration for Medical	http://globtek.force.com/models/ec_declaration_product?id=01t0c000008I4Zq&m=1
CE EC-Declaration for Industrial/Commercial/ITE	http://globtek.force.com/models/ec_declaration_product?id=01t0c000008I4Zq&i=2
CE EC-Declaration for Household	Contact GlobTek for more information
UKCA-Declaration for Medical	http://globtek.force.com/models/ukca_declaration_product?id=01t0c000008I4Zq&m=1
UKCA-Declaration for Industrial/Commercial/ITE	http://globtek.force.com/models/ukca_declaration_product?id=01t0c000008I4Zq&i=2
UKCA-Declaration for Household	Contact GlobTek for more information
Morocco SDoC Declaration	https://globtek.secure.force.com/models/Morocco_SDoC_Declaration?id=a0O0c00000PILwIEAH
RoHS/RoHS3 Declaration	https://www.globtek.com/pdf/rohs_cert/01t0c000008I4ZqAAI
REACH Declaration	https://www.globtek.com/pdf/iso_certificates/REACH.pdf
Conflict Minerals Declaration	https://www.globtek.com/pdf/conflict-minerals.pdf
Prop 65 Statement	https://en.globtek.com/prop-65-statement.pdf

IPXY rating is based on 3rd party testing and customers should check suitability and test system level IPXY rating before ordering.

Regulatory Certifications/Label Markings

Below follows a link to the latest regulatory certifications and marks for this specific product. National standards as well as certification schemes are constantly changing and so is the set of certification marks and symbols applicable to this product. Various standards, marks and symbols, and certificates are subject to change at any time without notice.

Additional standards or unique country certifications are available upon request. Please contact Globtek to request a quotation.

LATEST PRODUCT/MODEL CERTIFICATIONS:	https://www.globtek.com/datasheet/w70351
AGENCY ONLINE DOCUMENTS:	http://www.globtek.info/certs/GTM96605-GEN2/

(F2) Isolated Functional Earth for GTM96 series, Improved EMC

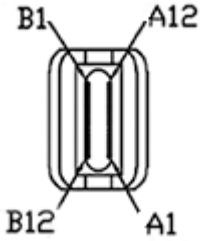

+V: A4, A9, B4, B9,
GND: A1, A12, B1, B12,

CC1: A5,
D+:A6,
D-:A7

PROPRIETARY INFORMATION
PROPRIETARY OF GLOBTEK, INC. ANY REPRODUCTION, DISCLOSURE OR USE OF THIS DRAWING, IN WHOLE OR IN PART, IS HEREBY PROHIBITED EXCEPT AS SPECIFIED IN WRITING BY GLOBTEK, INC. © GlobTek, Inc. 2018 - 2022
guest /08/23/2022 6:57:10 PM CLONED FROM TR9KZ3000USBCFG2R6B

PACKAGING

Packing Spec P/N:	Standard DT, Cellular packaging, User manual
Box Qty:	20
Gift Box Size (mm):	Egg Crate
Gift Box Color:	None
Master Carton Size (mm):	427 x 405 x 158
Master Carton Cubic Volume (m^3):	0.03
Master GW (Kg):	7.0 kg
BLADES INCLUDED:	N/A: Not Applicable
BLADE/CORD INSTALLED:	N/A: Not Applicable
USER MANUAL*:	809-DESKTOPUSERMANUAL on A4 paper
USER MANUAL WEB LINK:	https://en.globtek.com/pdf/809-DESKTOPUSERMANUAL.jpg

* This specification sheet is considered the user manual for all applications. It is expected that the buyer of this product will use it to formulate their own user manual for their end product and a user manual specifically for the power adapter is not usually required. If a user manual is not specifically listed above then none will be provided with this unit.

If specific packaging is required, this section must specify all requirements and note “no exceptions”. If this section does not specify packaging, it is subject to change without notice at GlobTek’s discretion.

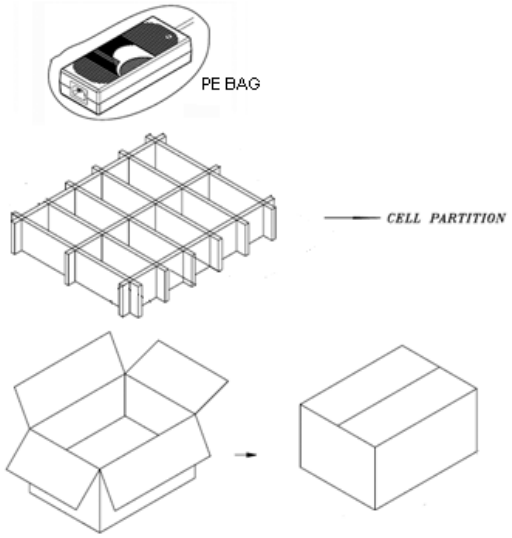

PROPRIETARY INFORMATION
PROPRIETARY OF GLOBTEK, INC. ANY REPRODUCTION, DISCLOSURE OR USE OF THIS DRAWING, IN WHOLE OR IN PART, IS HEREBY PROHIBITED EXCEPT AS SPECIFIED IN WRITING BY GLOBTEK, INC. © GlobTek, Inc. 2018 - 2022
guest /08/23/2022 6:57:10 PM CLONED FROM TR9KZ3000USBCFG2R6B

GlobTek, Inc.
www.globtek.com
186 Veterans Drive,
Northvale, NJ 07647
Tel. (201) 784-1000
Fax (201) 784-0111

Drawing Title: GTM96605-G2A1-T3, USB Power Delivery (PD) Source, ICT/ITE/Medical, Efficiency Level: USA DOE Level VI / Eco-design Directive 2009/125/EC, (EU) 2019/1782, Case Color/Style: GlobTek Black, Desktop/External, USB Adaptive Power Supply AC Adaptor, Input Rating: 100-240V~, 50-60Hz, IEC 60320/C14 , Output Rating: 60W, 5V, 5.8V, 9V, 12V, 15V, 15.1V, 20VV@4.6A, 4.6A, 4.4A, 4A, 3.6A, 3.6A, 3AA, Output Configuration: 1500 mm, 2C 20 + 3C 28/5C + Shield Cond, N/A, USB Type-C Connector, Shielded, Unibody, Rugged, Ferrite: None, GlobTek Black, GT Cord # C51824, Pin Out: +V: A4, A9, B4, B9, GND: A1, A12, B1, B12, CC1: A5, D+:A6, D-:A7, Blades/Input Cord: Not Applicable, Approvals: RCM; Morocco; PSE; VCCI; CE; China RoHS; RoHS; Level VI; Class I; EAC; Ukraine; CB 60601-1 2MOPP (6W max); CB 60950; CB 62368 (pending); ETL 62368; ETL; cETLus 60601-1 3rd; cETLus 60601; RCM; S-Mark 60950; cETLus 60950-1; UKCA; Conforms to 62368-1; LPS 60950; CCC; WEEE;

Model No. GTM96605-G2A1-T3

Part No./Ordering No. TR9CZ3000USBCG2R6BF2 | Rev C6

PROPRIETARY INFORMATION
PROPRIETARY OF GLOBTEK, INC. ANY REPRODUCTION, DISCLOSURE OR USE OF THIS DRAWING, IN WHOLE OR IN PART, IS HEREBY PROHIBITED EXCEPT AS SPECIFIED IN WRITING BY GLOBTEK, INC. © GlobTek, Inc. 2018 - 2022
guest /08/23/2022 6:57:10 PM CLONED FROM TR9KZ3000USBCFG2R6B

INSTRUCTIONS TO THE OEM SYSTEMS ENGINEER

It is the responsibility of the OEM systems engineer to provide the end system user instructions and warnings for the use of this product in the end system.

If an input cord is required for this product, AC Mains voltage should be provided to the power supply by a power supply cord approved to the national standards of the country in which it will be used.

This product is not designed to be repaired. No serviceable parts inside. A blown internal fuse is an indication of catastrophic failure of circuit component(s). If a Failure Analysis is required for a failed power supply/battery charger, please return the damaged unit to GlobTek for an accurate determination of the root cause of the failure.

EMC Compliance of the complete OEM product, including the GlobTek power supply/battery charger needs to be verified by the OEM systems engineer.

INSTRUCTION SHEET

N/A

PROPRIETARY INFORMATION

PROPRIETARY OF GLOBTEK, INC. ANY REPRODUCTION, DISCLOSURE OR USE OF THIS DRAWING, IN WHOLE OR IN PART, IS HEREBY PROHIBITED EXCEPT AS SPECIFIED IN WRITING BY GLOBTEK, INC. © GlobTek, Inc. 2018 - 2022

guest /08/23/2022 6:57:10 PM CLONED FROM TR9KZ3000USBCFG2R6B