MPQ8645P

16V, 30A, Scalable, Digital, Synchronous Step-Down Converter with PMBus

DESCRIPTION

The MPQ8645P is a fully integrated, PMBus-compatible, high-frequency, synchronous buck converter. The MPQ8645P offers a very compact solution that achieves up to 30A of output current per phase, with excellent load and line regulation over a wide input supply range. The MPQ8645P operates at high efficiency over a wide output current load range.

The PMBus interface provides converter configurations and key parameter monitoring.

The MPQ8645P adopts MPS's proprietary multi-phase constant-on-time (MCOT) control, which provides fast transient response and eases loop stabilization. The MCOT scheme also allows multiple MPQ8645P devices to be connected in parallel with excellent current sharing and phase interleaving for high-current applications.

Fully integrated protection features include over-current protection (OCP), over-voltage protection (OVP), under-voltage protection (UVP), and over-temperature protection (OTP).

The MPQ8645P requires a minimal number of readily available, standard external components, and is available in a TQFN-25 (4mmx5mm) package.

FEATURES

- PMBus 1.3 Compliant
- Scalable Multi-Phase Operation
- 3.1V to 16V with External 3.3V VCC Bias
  4V to 16V with Internal Bias or External 3.3V VCC Bias
- 30A Continuous Output Current per Phase
- Low $R_{DS(ON)}$ Integrated Power MOSFETs
- Lossless and Accurate On-Die Current Sensing
- Adaptive COT for Ultrafast Transient Response
- Stable with Zero-ESR Output Capacitors
- 0.5% Reference Voltage Over 0°C to 70°C Junction Temperature Range
- Output Voltage True Remote Sense
- Output Adjustable from 0.4V to 0.9 x V_{IN} Up to 5.5V Max
- Output Voltage/Current, Input Voltage, and Junction Temperature Reporting
- Built-In MTP to Store Custom Configurations
- Programmable via PMBus
  - Output Voltage
  - Output Current Limit
  - Selection of Pulse-Skip or Forced-CCM Operation
  - Soft-Start Time
  - Selection of Switching Frequency from 400kHz, 600kHz, 800kHz, or 1000kHz
  - Selection of Hiccup or Latch-Off for OCP, OVP, and OTP
  - Ramp Compensation
- Available in a TQFN-25 (4mmx5mm) Package

APPLICATIONS

- Telecom and Networking Systems
- Base Stations
- Servers

All MPS parts are lead-free, halogen-free, and adhere to the RoHS directive. For MPS green status, visit the MPS website under Quality Assurance. "MPS", the MPS logo, and "Simple, Easy Solutions" are trademarks of Monolithic Power Systems, Inc. or its subsidiaries.

MPS Proprietary Information. Patent Protected. Unauthorized Photocopy and Duplication Prohibited.
© 2020 MPS. All Rights Reserved.

TYPICAL APPLICATION CIRCUITS

Single-Phase Operation

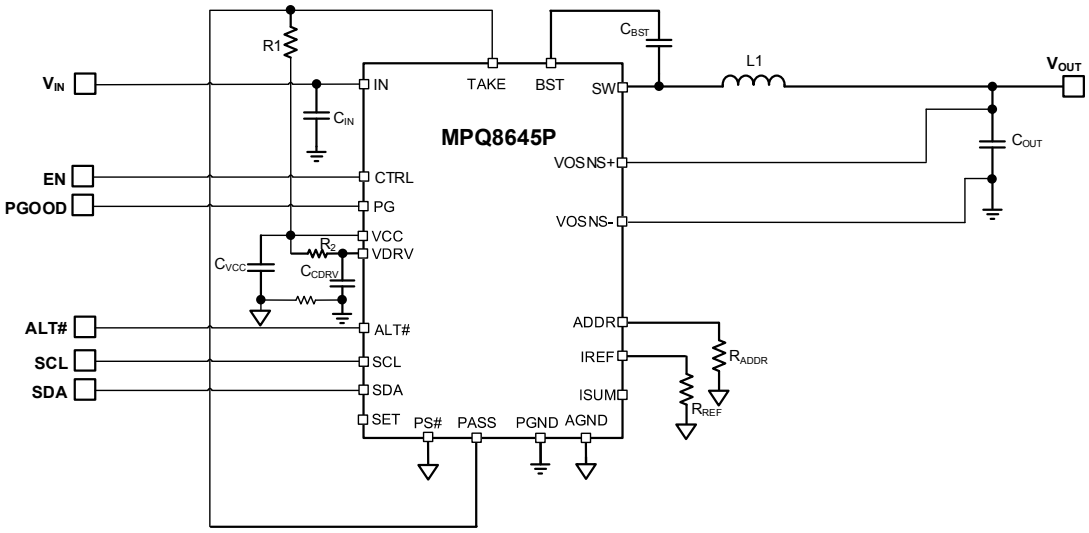

Two-Phase Operation

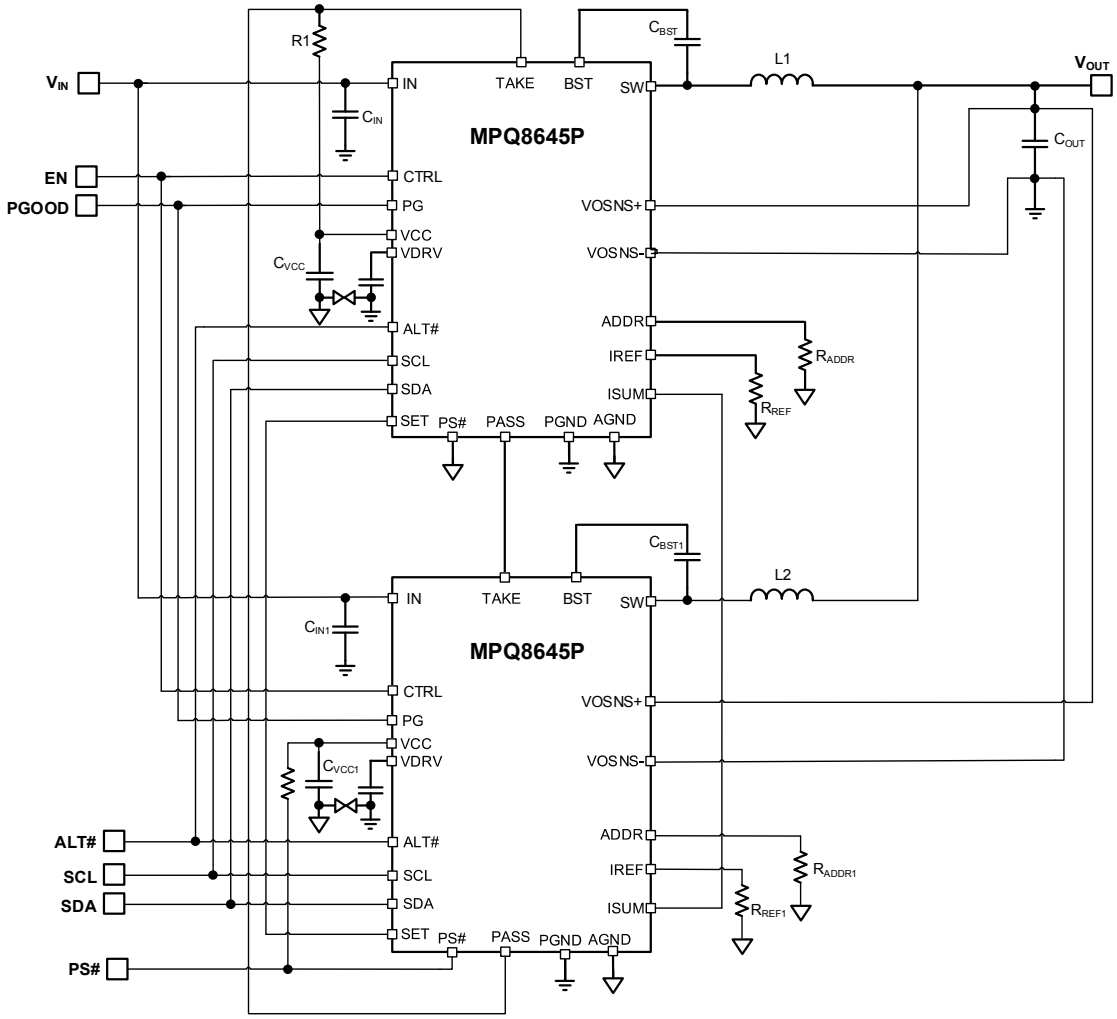

MPS Proprietary Information. Patent Protected. Unauthorized Photocopy and Duplication Prohibited.
© 2020 MPS. All Rights Reserved.

ORDERING INFORMATION

Part Number*	Package	Top Marking
MPQ8645PGVT- xxxx**	TQFN-25 (4mmx5mm)	*See Below*
EVKT-8645P	Evaluation kit	*See Below*

* For Tape & Reel, add suffix –Z (e.g. MPQ8645PGVT-xxxx**–Z).

** "xxxx" is the configuration code identifier for the register settings stored in the MTP. The default number is "0000". Each "x" is a hexadecimal value between 0 and F. Work with an MPS FAE to create this unique number, even if ordering the "0000" code.

TOP MARKING

MPSYWW
M8645P
LLLLLL

MPS: MPS prefix
Y: Year code
WW: Week code
M8645P: Part number
LLLLLL: Lot number

EVALUATION KIT EVKT-8645P

EVKT-8645P contents: (Items below can be ordered separately).

Item #	Part Number	Item	Quantity
1	EVQ8645P-V-1Phase-00A	MPQ8645P single-phase evaluation board	1
2	MPQ8645P software	MPQ8645P GUI and driver for the USB communication interface	1
3	EVKT-USBI2C-02	One MPS PMBus USB communication interface, one USB cable, and one ribbon cable	1

Order directly from monolithicpower.com or our distributors.

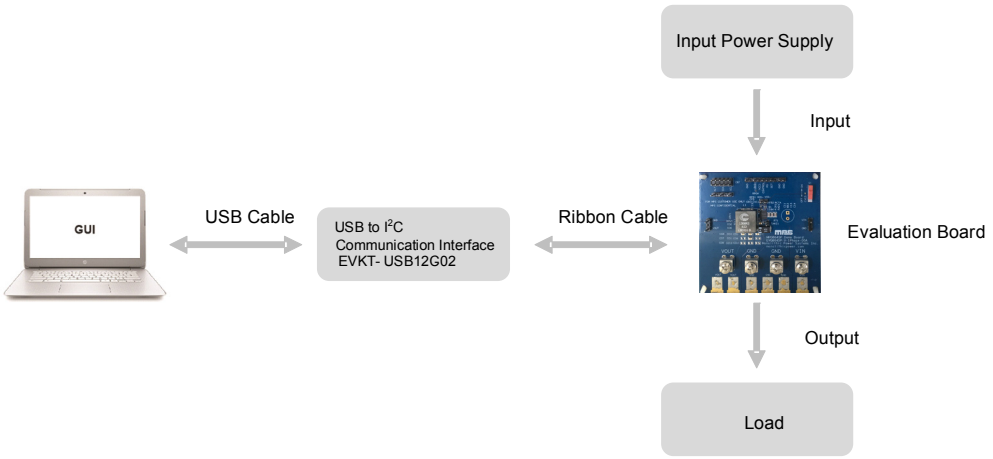

EVKT-8645P Kit Set-Up

MPS Proprietary Information. Patent Protected. Unauthorized Photocopy and Duplication Prohibited.
© 2020 MPS. All Rights Reserved.

PACKAGE REFERENCE

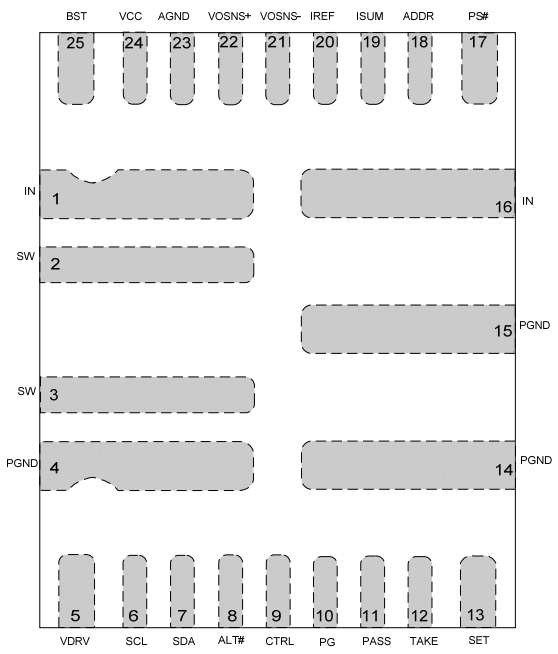

TQFN-25 (4mmx5mm)

PIN FUNCTIONS

PIN #	Name	Description
1, 16	IN	**Supply voltage.** IN supplies power to the internal MOSFET and regulator. Use an input capacitor to decouple the input rail. Use wide PCB traces and multiple vias to make the connection.
2, 3	SW	**Switch output.** Connect SW to the inductor and bootstrap capacitor. SW is driven up to V_{IN} by the high-side switch during the PWM duty cycle on time. The inductor current drives SW negative during the off time. Use wide PCB traces to make the connection.
4, 14, 15	PGND	**System ground.** PGND is the reference ground of the regulated output voltage, and requires careful consideration during PCB layout. Connect PGND with wide PCB traces.
5	VDRV	**Decoupling input pin for 3.3V driver power supply.** Decouple VDRV with a minimum 1μF ceramic capacitor placed as close to VDRV as possible. X7R or X5R grade dielectric ceramic capacitors are recommended. VDRV accepts an external 3.3V bias. If no external 3.3V bias is provided, connect VDRV to VCC through a 2Ω to 10Ω resistor.
6	SCL	**PMBus clock.**
7	SDA	**PMBus data.**
8	ALT#	**PMBus alert pin.** ALT# is active low. A pull-up resistor connected to 3.3V is required if the ALT# function is needed.
9	CTRL	**PMBus control pin.** CTRL is a digital input that turns the regulator on or off with proper ON_OFF_CONFIG (02h) configuration. Drive CTRL high to turn on the regulator. Drive CTRL low to turn off the regulator. Do not float CTRL.
10	PG	**Power good output.** The output of PG is an open-drain signal. PG requires a pull-up resistor connected to a DC voltage to indicate high if the output voltage exceeds 90% of the nominal voltage. There is a PGOOD delay from low to high. PG must be pulled high to ensure proper operation.

MPS Proprietary Information. Patent Protected. Unauthorized Photocopy and Duplication Prohibited.
© 2020 MPS. All Rights Reserved.

PIN FUNCTIONS *(continued)*

PIN #	Name	Description
11	PASS	**Passes RUN signals to the next phase.**
12	TAKE	**Receives RUN signals from the previous phase.** TAKE is used for master detection during the initial power-up. For the master phase, TAKE must be pulled high through a resistor. For the slave phase, TAKE is connected to the PASS of the previous phase.
13	SET	**PWM signal.** SET turns the high-side MOSFET on when a RUN signal is present. For multi-phase operation, tie the SET pins of all phases together.
17	PS#	**Phase shedding.** With proper PMBus setting, pull PS# high to enable a slave phase. Pull PS# low to disable a slave phase. Connect PS# of the master phase to AGND.
18	ADDR	**PMBus slave address-setting pin.** Connect a resistor from ADDR to AGND to set the address of this device.
19	ISUM	**Current-sense output.** For single-phase operation, keep ISUM floating. For multi-phase operation, tie the ISUM pins of all phases together for current sharing.
20	IREF	**Reference current generator amplifier output.** Connect a 60.4kΩ or 180kΩ resistor with 1% or higher accuracy to IREF.
21	VOSNS-	**Output voltage sense negative return.** VOSNS- is tied directly to the GND sense point of the load. Connect VOSNS- to AGND if the remote sense is not used.
22	VOSNS+	**Output voltage sense positive return.** Connect VOSNS+ to the output voltage sense positive side to provide feedback voltage to the system. Vias should be avoided on the VO traces.
23	AGND	**Analog ground.** Select AGND as the control-circuit reference point.
24	VCC	**Internal 3.3V LDO output.** VCC powers the analog and digital control circuits. Decouple VCC with a 1μF ceramic capacitor placed as close to VCC as possible. X7R or X5R grade dielectric ceramic capacitors are recommended. During MTP programming, a 5V voltage with a 300ms period may be observed on VCC. This VCC pin does not accept external voltage bias. For multi-phase applications, connect the VCC pins of all phases together.
25	BST	**Bootstrap.** A capacitor connected between SW and BS is required to form a floating supply across the high-side switch driver.

ABSOLUTE MAXIMUM RATINGS (1)

Supply voltage (V_{IN}) 18V
V_{IN} - $V_{SW\ (DC)}$ ..... -0.3V to 18.3V
V_{IN} - $V_{SW\ (25nc)}$ ..... -5V to 25V
$V_{SW\ (DC)}$ ..... -0.3V to 18.3V
$V_{SW\ (25ns)}$ (2) ..... -5V to 25V
V_{BST} 22.3V
V_{BST} - $V_{SW\ (25ns)}$ (2) 5V
V_{CC}, V_{DRV} 4.5V
$V_{CC\ (1s)}$ (3) 6V
All other pins ..... -0.3V to 4.3V
All other pins (1s) (3) 6V
Junction temperature ..... 170°C
Lead temperature ..... 260°C
Storage temperature ..... -65°C to +170°C

Recommended Operating Conditions (4)

Supply voltage (V_{IN}) ..... 4V to 16V
Output voltage (V_{OUT}) ..... 0.6V to 5.5V
External V_{DRV} bias ..... 2.9V to 3.6V
Operating junction temp (T_J) ..... -40°C to +125°C

Thermal Resistance (5) θ_{JB} θ_{JC_TOP}

TQFN-25 (4mmx5mm) ..... 1.8 ..... 6.3 ... °C/W

Notes:

1) Exceeding these ratings may damage the device.
2) Specified by design. Measured by using a differential oscilloscope probe.
3) Voltage rating during MTP programming.
4) The device is not guaranteed to function outside of its operating conditions.
5) θ_{JB} is the thermal resistance from the junction to the board around the PGND soldering point. θ_{JC_TOP} is the thermal resistance from the junction to the top of the package.

MPS Proprietary Information. Patent Protected. Unauthorized Photocopy and Duplication Prohibited.
© 2020 MPS. All Rights Reserved.

ELECTRICAL CHARACTERISTICS

V_{IN} = 12V, T_J = -40°C to +125°C, unless otherwise noted.

Parameters	Symbol	Condition	Min	Typ	Max	Units
V_{IN} Supply Current						
Supply current (quiescent)	I_{IN}	V_{CTRL} = 0V		2.5	4	mA
MOSFET						
$R_{DS(ON)}$	Ron_{HS}	T_J = 25°C		4.4		mΩ
	Ron_{LS}	T_J = 25°C		1.5		
Switch leakage	SW_{LKG_HS}	SW = 0V		0.1	10	μA
	SW_{LKG_LS}	SW = 12V		1	20	
Output Current Limit						
Output current limit (inductor valley)	I_{LIM_VALLEY}	D7h = 0x14	27	30	33	A
Min output current limit (inductor valley) programmable value (6)	$I_{LIM_VALLEY_MIN}$			1.5		A
Max output current limit (inductor valley) programmable value	$I_{LIM_VALLEY_MAX}$		36	40	44	A
Output current limit (DC)	I_{LIM_DC}	46h = 0x007C (per phase)		30		A
Min output over-current programmable value (6)	$I_{LIM_DC_MIN}$			3		A
Max output over-current warning programmable value (6)	$I_{LIM_DC_MAX}$	46h = 0x00BA (per phase)		45		A
Output over-current warning (DC)	I_{WARN}	4Ah = 0x0074 (per phase)	25	28	31	A
Min output over-current warning programmable value (6)				3		A
Max output over-current warning programmable value (6)		4Ah = 0x00BA (per phase)		45		A
Low-side negative current limit in OVP	$I_{LIM_NEG_OVP}$	D5h[2] = 1b'0		-13		A
		D5h[2] = 1b'1		-20		A
Low-side negative current limit in OSM (6)	$I_{LIM_NEG_OSM}$			-10		A
Frequency and Timer						
Switching frequency (6)	f_{SW}	V_O = 1V, I_O = 0A, T_A = 25°C, (D2h[2:1] = 2b'00)	280	400	520	kHz
		V_O = 1V, I_O = 0A, T_A = 25°C, (D2h[2:1] = 2b'01)	480	600	720	kHz
		V_O = 1V, I_O = 0A, T_A = 25°C, (D2h[2:1] = 2b'10)	680	800	920	kHz
		V_O = 1V, I_O = 0A, T_A = 25°C, (D2h[2:1] = 2b'11)	850	1000	1150	kHz
Minimum on time (6)	t_{ON_MIN}	f_{SW} = 1000kHz, V_O = 0.6V			50	ns
Minimum off time (6)	t_{OFF_MIN}	V_{FB} = 580mV			220	ns

MPS Proprietary Information. Patent Protected. Unauthorized Photocopy and Duplication Prohibited.
© 2020 MPS. All Rights Reserved.

ELECTRICAL CHARACTERISTICS *(continued)*

V_{IN} = 12V, T_J = -40°C to +125°C, unless otherwise noted.

Parameters	Symbol	Condition	Min	Typ	Max	Units
Output Over-Voltage and Under-Voltage Protection (OVP, UVP)						
OVP threshold	V_{OVP}	Default setting (D4h[1:0] = 2b'00)	112%	115%		V_{REF}
UVP threshold	V_{UVP}	Default setting (D9h[3:2] = 2b'10)	76%	79%	83%	V_{REF}
Max programmable OVP threshold	V_{OVP_max}	D4h[1:0] = 2b'11	127%	130%	133%	V_{REF}
Min programmable OVP threshold	V_{OVP_min}	D4h[1:0] = 2b'00	112%	115%		V_{REF}
OVP threshold resolution		Per LSB		5%		V_{REF}
Max programmable UVP threshold	V_{UVP_max}	D9h[3:2] = 2b'11	81%	84%	88%	V_{REF}
Min programmable UVP threshold	V_{UVP_min}	D9h[3:2] = 2b'00	66%	69%	72%	V_{REF}
UVP threshold resolution		Per LSB		5%		V_{REF}
OSM threshold rising	V_{OSM_RISE}	EAh[9] = 1b'0		104.8%		V_{REF}
OSM threshold falling	V_{OSM_FALL}			102.2%		V_{REF}
CTRL						
Input high voltage	V_{IH_CTRL}		2.15			V
Input low voltage	V_{IL_CTRL}				1.20	V
ADC (6)						
Input voltage range			0		1.28	V
ADC resolution				10		Bits
DNL				1		LSB
Sample rate				3		kHz
DAC (Feedback Voltage)						
Range			512	600	672	mV
Feedback accuracy	V_{FB}	21h = 0x012C, D1h[1:0] = 2b'00	594	600	606	mV
Resolution		Per LSB		2		mV
Output voltage slew rate		Default setting (DAh[3:0] = 4b'0000)		20		μs/ 2mV
Minimum output voltage slew rate		DAh[3:0] = 4b'1111	30	40	50	μs/ 2mV
Maximum output voltage slew rate		DAh[3:0] = 4b'0000		20		μs/ 2mV

MPS Proprietary Information. Patent Protected. Unauthorized Photocopy and Duplication Prohibited.
© 2020 MPS. All Rights Reserved.

ELECTRICAL CHARACTERISTICS *(continued)*

V_{IN} = 12V, T_J = -40°C to +125°C, unless otherwise noted.

Parameters	Symbol	Condition	Min	Typ	Max	Units
Maximum feedback voltage with margin (6)	$V_{FB_MG_HIGH_MAX}$			672		mV
Minimum feedback voltage with margin (6)	$V_{FB_MG_LOW_MIN}$			512		mV
Feedback voltage with margin high (6)	$V_{FB_MG_HIGH}$			672		mV
Feedback voltage with margin low (6)	$V_{FB_MG_LOW}$			512		mV
Soft Start and Turn-On Delay						
Soft-start time	t_{SS}	61h[2:0] = 3b'001	1.7	2.3	3.0	ms
Min programmable soft-start time (6)	t_{SS_min}	61h[2:0] = 3b'000		1		ms
Max programmable soft-start time (6)	t_{SS_max}			16		ms
Turn-on delay	t_{ON_DELAY}	60h = 0x0001	3.9	4.5	5.1	ms
Min turn-on delay (6)	$t_{ON_DELAY_Min}$	60h = 0x0000		0		ms
Max turn-on delay (6)	$t_{ON_DELAY_Max}$	60h = 0x0100		1024		ms
Error Amplifier						
Feedback current	I_{FB}	V_{FB} = V_{REF}		50	100	nA
Soft Shutdown						
Soft shutdown discharge MOSFET	R_{ON_DISCH}	T_J = 25°C		60	120	Ω
Under-Voltage Lockout (UVLO)						
VCC under-voltage lockout threshold rising	VCC_{Vth_Rise}		2.60	2.75	2.9	V
VCC under-voltage lockout threshold falling	VCC_{Vth_Fall}		2.35	2.50	2.65	V
VCC output voltage	V_{CC}		3.10	3.25	3.40	V
Min input programmable turn-on voltage	$V_{IN_ON_MIN}$	VCC = 3.3V	2.65	2.90	3.1	V
Max input programmable turn-on voltage	$V_{IN_ON_MAX}$		16	16.5	17	V
Min input programmable turn-off voltage (6)	$V_{IN_OFF_MIN}$	VCC = 3.3V	2.5	2.75	3	V
Max input programmable turn-off voltage	$V_{IN_OFF_MAX}$			15.75		V
VDRV under-voltage lockout threshold rising	$VDRV_{Vth_Rise}$		2.55	2.75	2.95	V
VDRV under-voltage lockout threshold falling	$VDRV_{Vth_Fall}$		2.15	2.35	2.55	V

MPS Proprietary Information. Patent Protected. Unauthorized Photocopy and Duplication Prohibited.
© 2020 MPS. All Rights Reserved.

ELECTRICAL CHARACTERISTICS *(continued)*

V_{IN} = 12V, T_J = -40°C to +125°C, unless otherwise noted.

Parameters	Symbol	Condition	Min	Typ	Max	Units
Power Good (PG)						
Power good high threshold	$PG_{Vth_Hi_Rise}$	FB from low to high, default setting (D9h[1:0] = 2b'01)	91%	94%	97%	V_{REF}
Power good low threshold	$PG_{Vth_Lo_Rise}$	FB from low to high, default setting (D4h[1:0] = 2b'00)	112%	115%	118%	V_{REF}
	$PG_{Vth_Lo_Fall}$	FB from high to low, default setting (D9h[3:2] = 2'b10)	76%	79%	83%	V_{REF}
Power good low-to-high delay	PG_{Td}	Default setting (D1h[5:2] = 4b'0000)	1.6	2.0	2.4	ms
Power good sink current capability	V_{PG}	I_{PG} = 10mA			0.3	V
Power good leakage current	I_{PG_LEAK}	V_{PG} = 3V		1.5	2.3	μA
Power good low-level output voltage	V_{OL_100}	V_{IN} = 0V, pull PGOOD up to 3.3V through a 100kΩ resistor, T_J = 25°C		600	720	mV
	V_{OL_10}	V_{IN} = 0V, pull PGOOD up to 3.3V through a 10kΩ resistor, T_J = 25°C		700	820	
Thermal Protection (TP)						
TP fault rising threshold (6)	T_{SD_Rise}	Default setting (4Fh = 0x0091)		145		°C
TP fault falling threshold (6)	T_{SD_Fall}	Default setting (4Fh = 0x007D and D6h[2:1] = 2b'00)		125		°C
Min TP fault temp (6)	$T_{SD_WARN_MIN}$			35		°C
Max TP fault temp (6)	$T_{SD_WARN_MAX}$			165		°C
TP warning rising threshold (6)	T_{WARN_Rise}	Default setting (4Ah = 0x0078)		120		°C
TP warning falling threshold (6)	T_{WARN_Fall}	Default setting (4Ah = 0x0078, D6h[2:1] = 2b'00)		100		°C
Min TP warning temp (6)	$T_{SD_WARN_MIN}$			35		°C
Max TP warning temp (6)	$T_{SD_WARN_MAX}$			160		°C
Monitoring Parameters						
Min output voltage monitor range (6)	M_{VOUT_RANGE}			0		V
Max output voltage monitor range (6)	M_{VOUT_RANGE}			5.5		V
Output voltage monitor accuracy (6)	M_{VOUT_ACC}	V_O = 0.6V to 2.5V	-2%	0.6	2%	V
Output voltage monitor accuracy (6)	M_{VOUT_ACC}	V_O = 2.5V to 5.5V	50		50	mV
Output voltage bit resolution				1.25		mV
Output current monitor accuracy	M_{IOUT_ACC}	V_O = 1.2V, f_{SW} = 800kHz, I_O = 30A	-2.5		2.5	A
Output current monitor accuracy (6)	M_{IOUT_ACC}	3A ≤ I_O ≤30A	-2.5		2.5	A

MPS Proprietary Information. Patent Protected. Unauthorized Photocopy and Duplication Prohibited.
© 2020 MPS. All Rights Reserved.

ELECTRICAL CHARACTERISTICS *(continued)*

V_{IN} = 12V, T_J = -40°C to +125°C, unless otherwise noted.

Parameters	Symbol	Condition	Min	Typ	Max	Units
Output current bit resolution (6)				62.5		mA
Min input voltage monitor (6)	M_{IN_RANGE}			2.5		V
Max input voltage monitor (6)	M_{IN_RANGE}			18		V
Input voltage monitor accuracy	M_{IN_ACC}		-2%	12	2%	V
Input voltage bit resolution (7)				25		mV
PMBus DC Characteristics (SDA, SCL, ALT#, CTRL) (6)						
Input high voltage	V_{IH}				2.1	V
Input low voltage	V_{IL}		0.8			V
Output low voltage	V_{OL}	I_{OL} = 1mA			0.4	V
Input leakage current	I_{LEAK}	SDA, SCL, ALT# = 3.3V	-10		10	μA
Maximum voltage (SDA, SCL, ALT#, CTRL)	V_{MAX}	Transient voltage including ringing	-0.3	3.3	3.6	V
Pin capacitance on SDA,SCL	C_{PIN}				10	pF
PMBus Timing Characteristics (7)						
Min operating frequency				10		kHz
Max operating frequency				1000		kHz
Bus free time		Between stop and start condition	4.7			μs
Holding time			4.0			μs
Repeated start condition set-up time			4.7			μs
Stop condition set-up time			4.0			μs
Data hold time			300			ns
Data set-up time			250			ns
Clock low time-out			25		35	ms
Clock low period			4.7			μs
Clock high period			4.0		50	μs
Clock/data fall time					300	ns
Clock/data rise time					1000	ns

Notes:

6) Guaranteed by design.
7) Guaranteed by design, not tested in production. The parameter is tested during parameter characterization.

MPS Proprietary Information. Patent Protected. Unauthorized Photocopy and Duplication Prohibited.
© 2020 MPS. All Rights Reserved.

TYPICAL PERFORMANCE CHARACTERISTICS

Load Regulation
V_{IN} = 12V, CCM, f_{SW} = 1000kHz

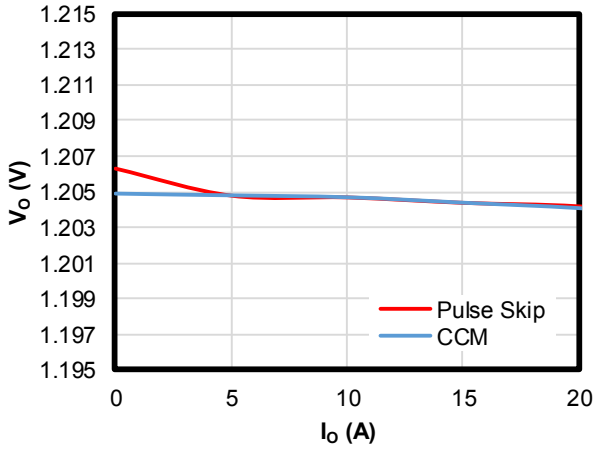

f_{SW} vs. I_{OUT}
V_{IN} = 12V, CCM

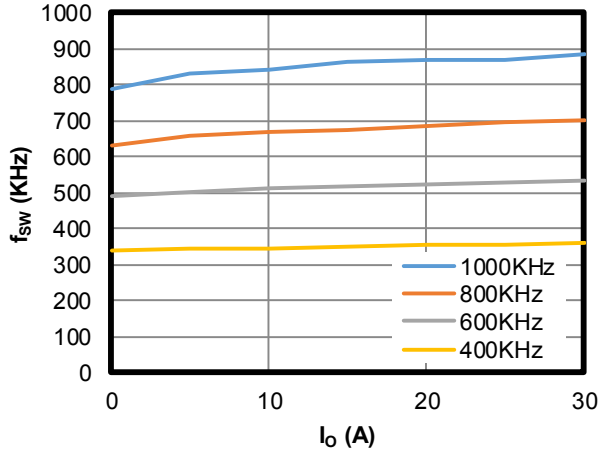

Thermal Derating
V_{IN} = 12V, f_{SW} = 1000kHz, T_J = 125°C, no air flow

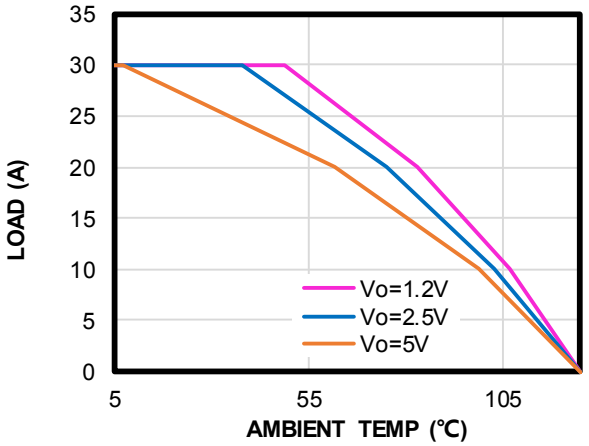

Efficiency
V_{IN} = 12V, f_{SW} = 1000kHz, L = 0.44μH/0.18mΩ

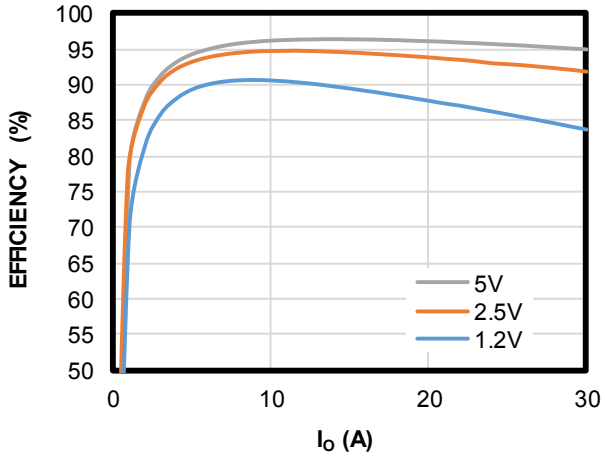

MPS Proprietary Information. Patent Protected. Unauthorized Photocopy and Duplication Prohibited.
© 2020 MPS. All Rights Reserved.

TYPICAL PERFORMANCE CHARACTERISTICS *(continued)*

I_{OUT} = 0A, CCM, 1000kHz, Single-Phase

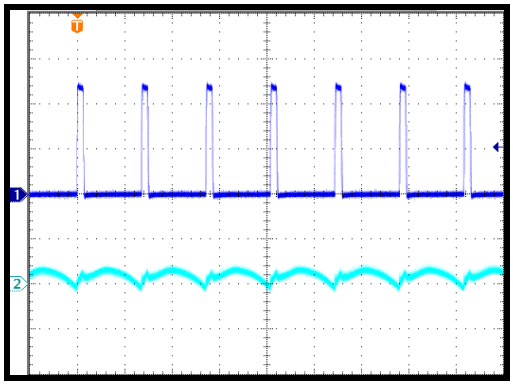

I_{OUT} = 30A, CCM, 1000kHz, Single-Phase

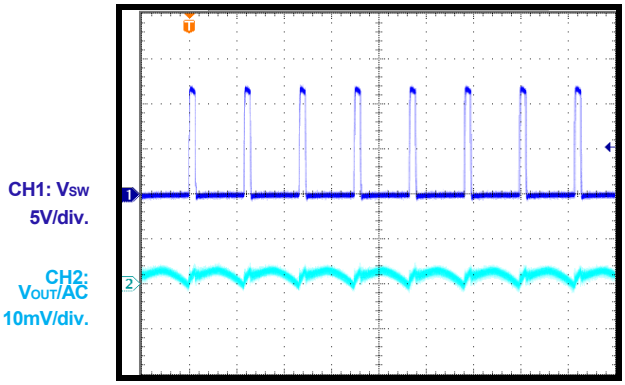

I_{OUT} = 0A, DCM, 1000kHz, Single-Phase

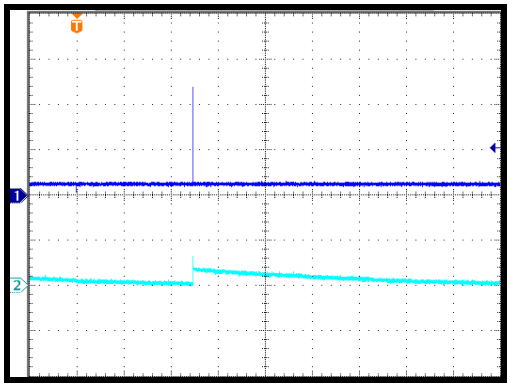

I_{OUT} = 30A, DCM, 1000kHz, Single-Phase

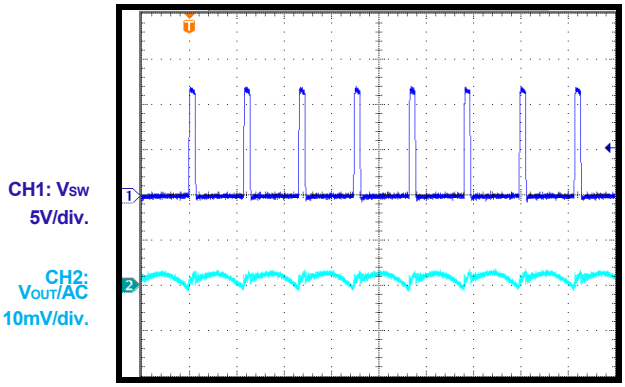

Power-On through CTRL, CCM, I_{OUT} = 0A, Single-Phase

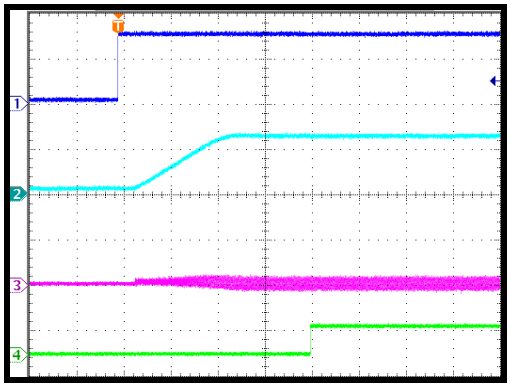

Power-On through CTRL, CCM, I_{OUT} = 30A, Single-Phase

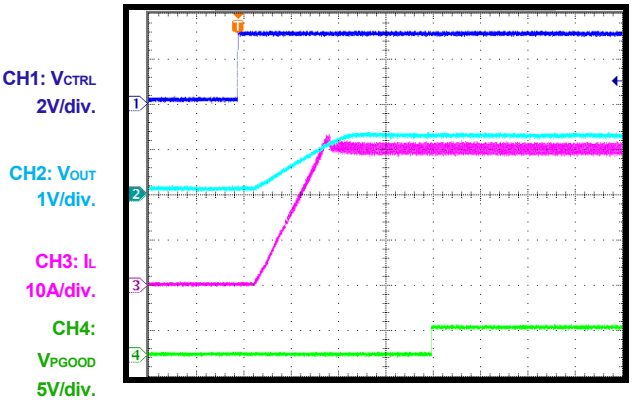

MPS Proprietary Information. Patent Protected. Unauthorized Photocopy and Duplication Prohibited.
© 2020 MPS. All Rights Reserved.

TYPICAL PERFORMANCE CHARACTERISTICS *(continued)*

Power-On through CTRL, DCM, I_{OUT} = 0A, Single-Phase

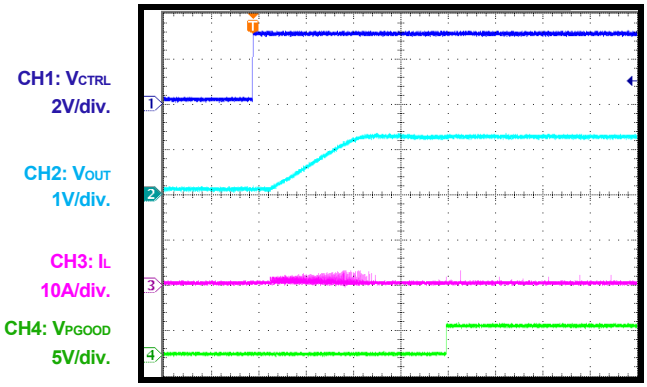

1ms/div.

Power-On through CTRL, DCM, I_{OUT} = 30A, Single-Phase

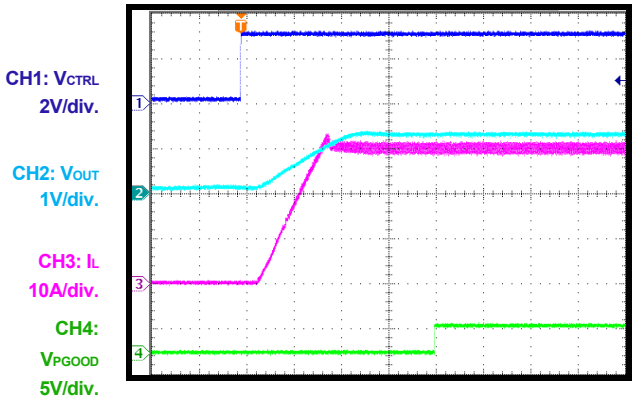

1ms/div.

Power-Off through CTRL, CCM, I_{OUT} = 0A, Single-Phase

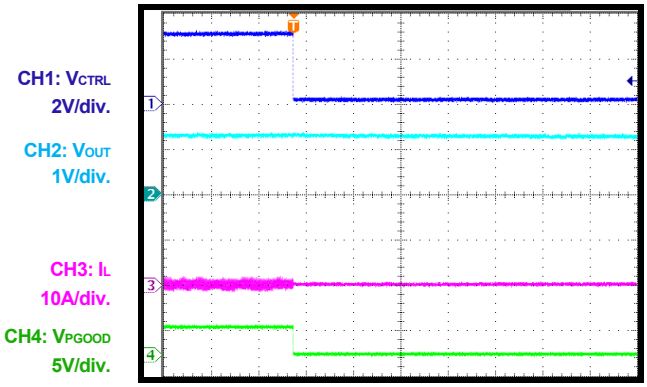

20ms/div.

Power-Off through CTRL, CCM, I_{OUT} = 30A, Single-Phase

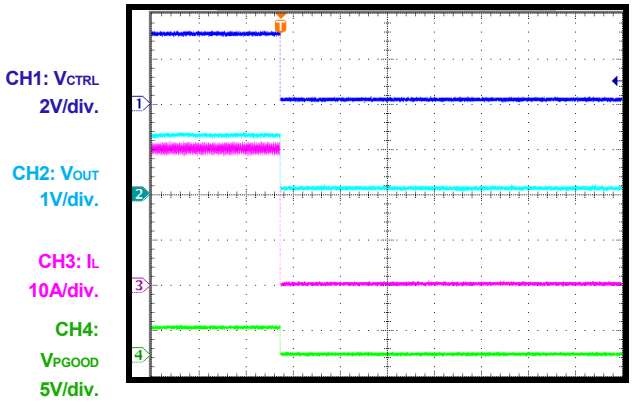

20ms/div.

Power-Off through CTRL, DCM, I_{OUT} = 0A, Single-Phase

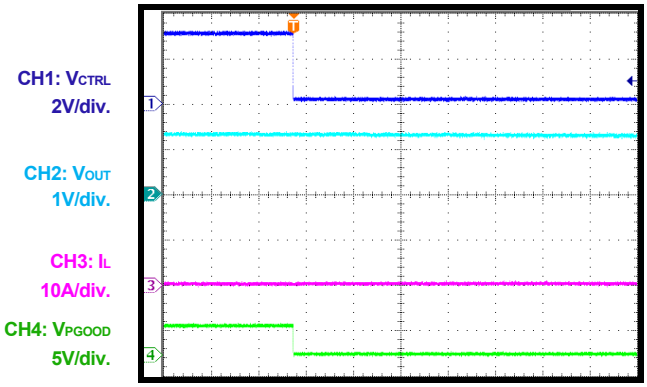

20ms/div.

Power-Off through CTRL, DCM, I_{OUT} = 30A, Single-Phase

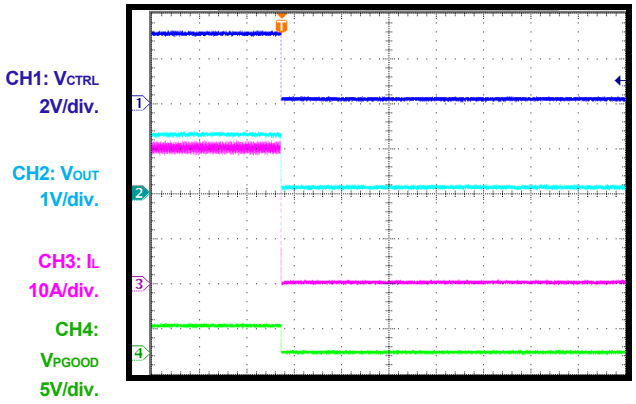

20ms/div.

MPS Proprietary Information. Patent Protected. Unauthorized Photocopy and Duplication Prohibited.
© 2020 MPS. All Rights Reserved.

TYPICAL PERFORMANCE CHARACTERISTICS *(continued)*

Pre-Bias Start-Up, CCM, Single-Phase

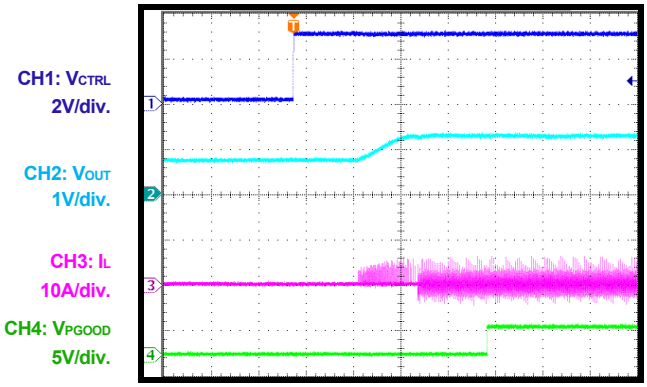

1ms/div.

Pre-Bias Start-Up, DCM, Single-Phase

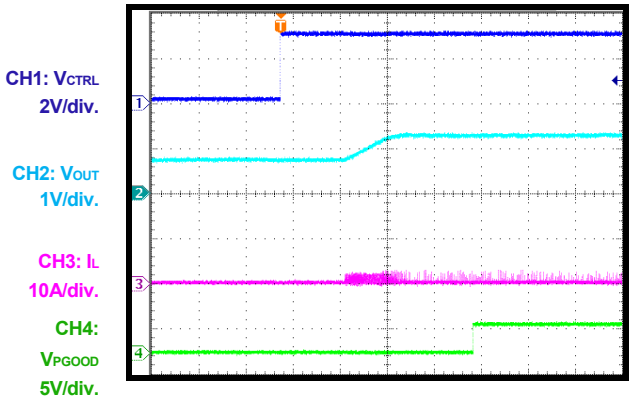

1ms/div.

Load Transient, I_{OUT} = 0A to 10A, CCM, 1000kHz

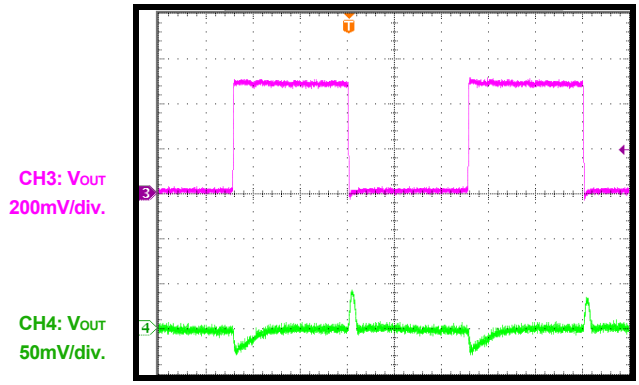

20µs/div.

Load Transient, I_{OUT} = 0A to 10A, DCM, 1000kHz

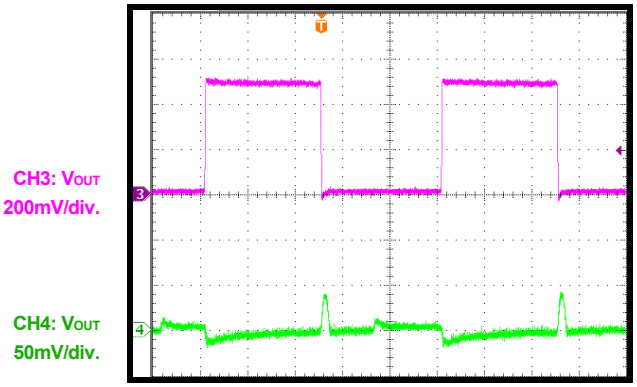

20µs/div.

OCP, Latch-Off Option, CCM, Single-Phase

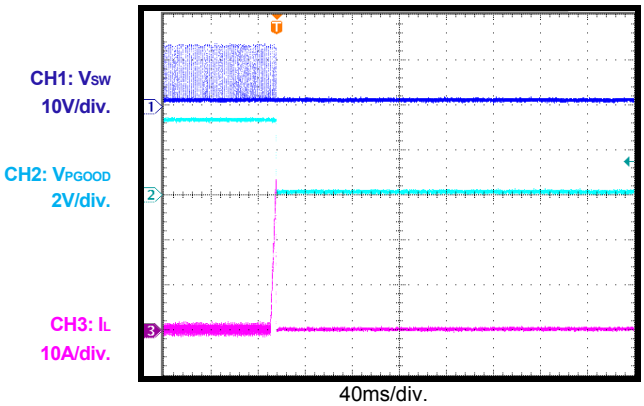

40ms/div.

OCP, Hiccup Option, CCM, Single-Phase

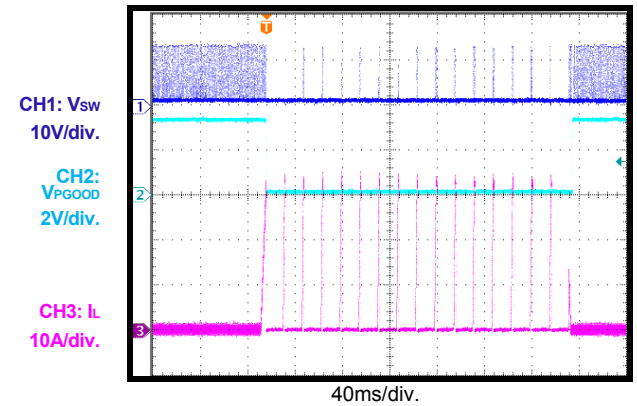

40ms/div.

MPS Proprietary Information. Patent Protected. Unauthorized Photocopy and Duplication Prohibited.
© 2020 MPS. All Rights Reserved.

TYPICAL PERFORMANCE CHARACTERISTICS *(continued)*

OCP, Latch-Off Option, DCM, Single-Phase

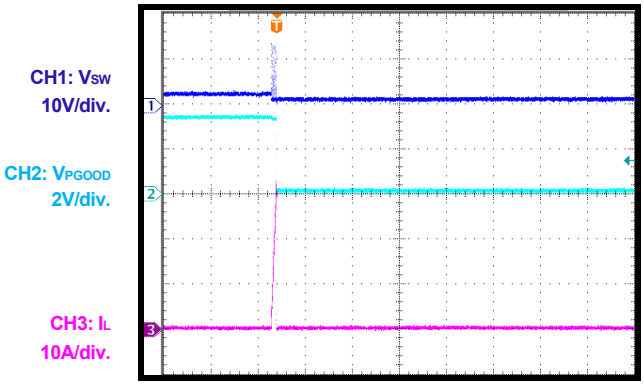

OCP, Hiccup Option, DCM, Single-Phase

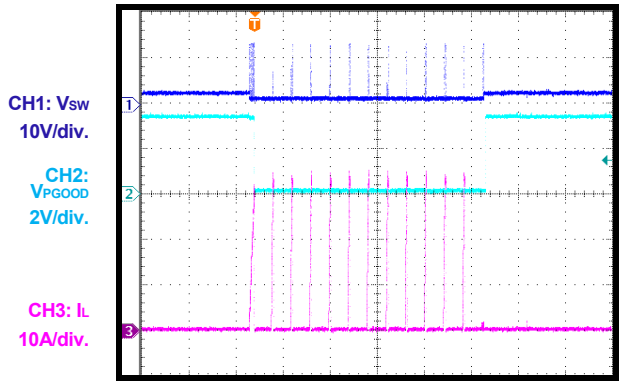

OVP, Hiccup Option, DCM, Single-Phase

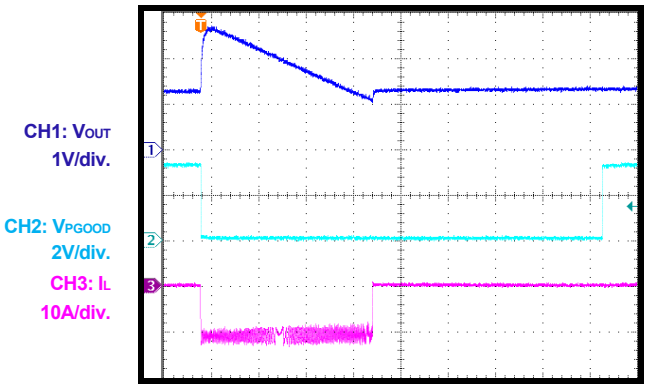

OVP, Hiccup Option, CCM, Single-Phase

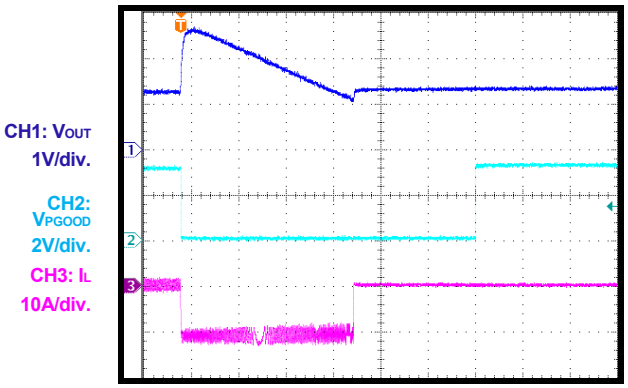

OVP, Latch-Off Option, DCM, Single-Phase

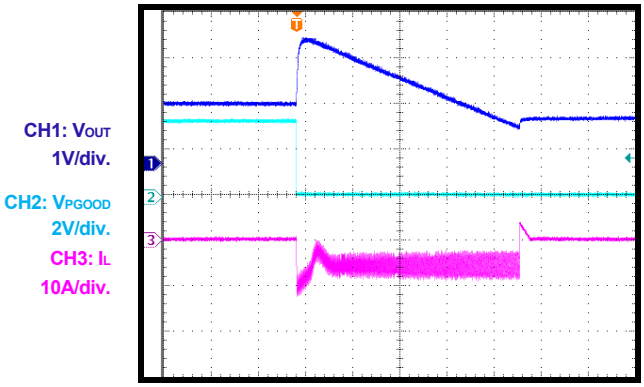

OVP, Latch-Off Option, CCM, Single-Phase

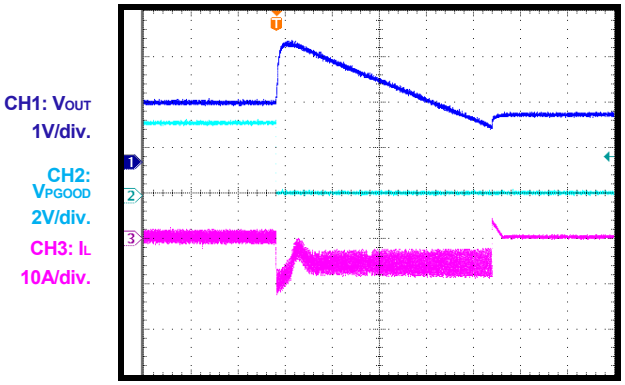

MPS Proprietary Information. Patent Protected. Unauthorized Photocopy and Duplication Prohibited.
© 2020 MPS. All Rights Reserved.

FUNCTIONAL BLOCK DIAGRAM

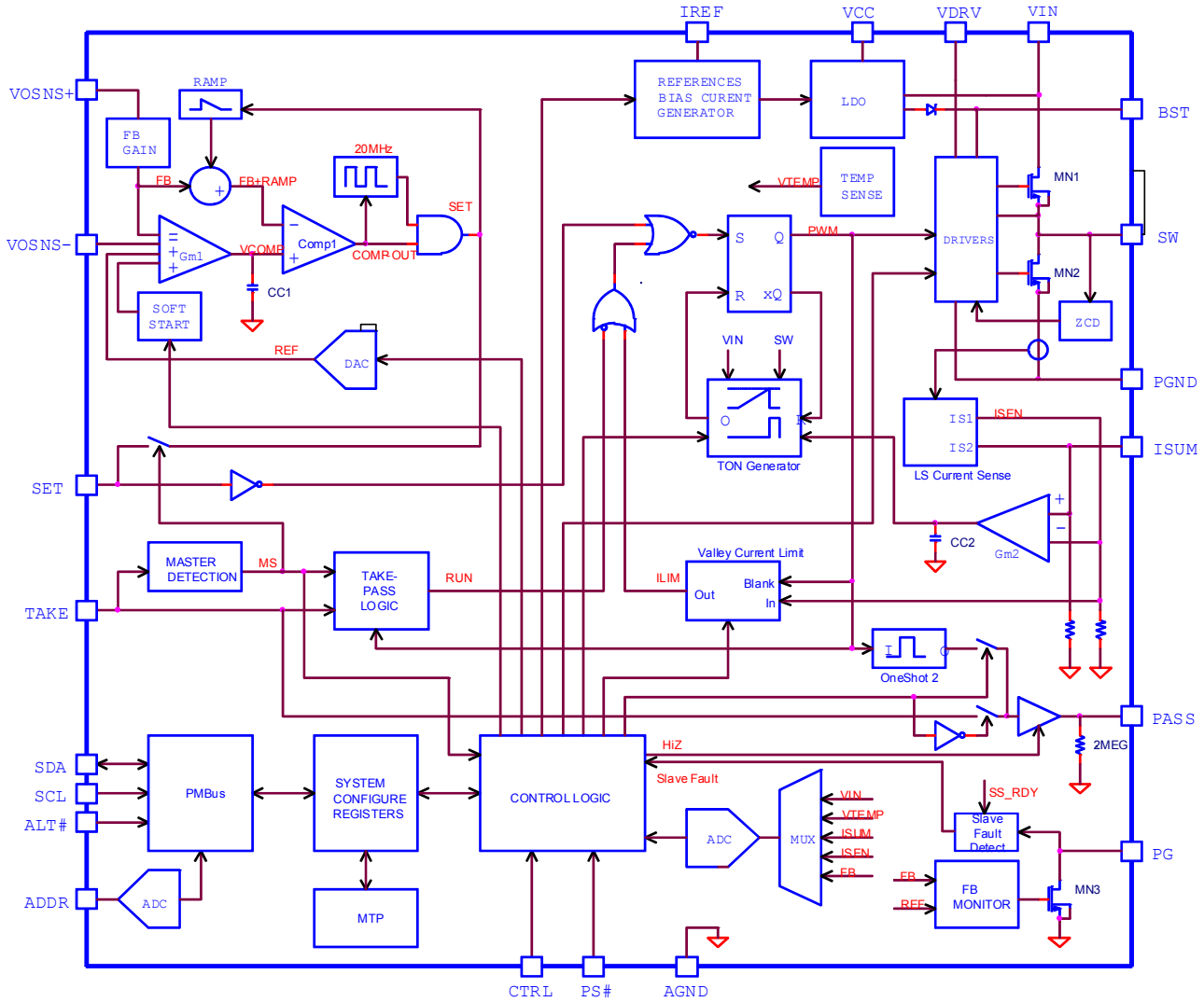

Figure 1: Functional Block Diagram

MPS Proprietary Information. Patent Protected. Unauthorized Photocopy and Duplication Prohibited.
© 2020 MPS. All Rights Reserved.

MULTI-PHASE OPERATION

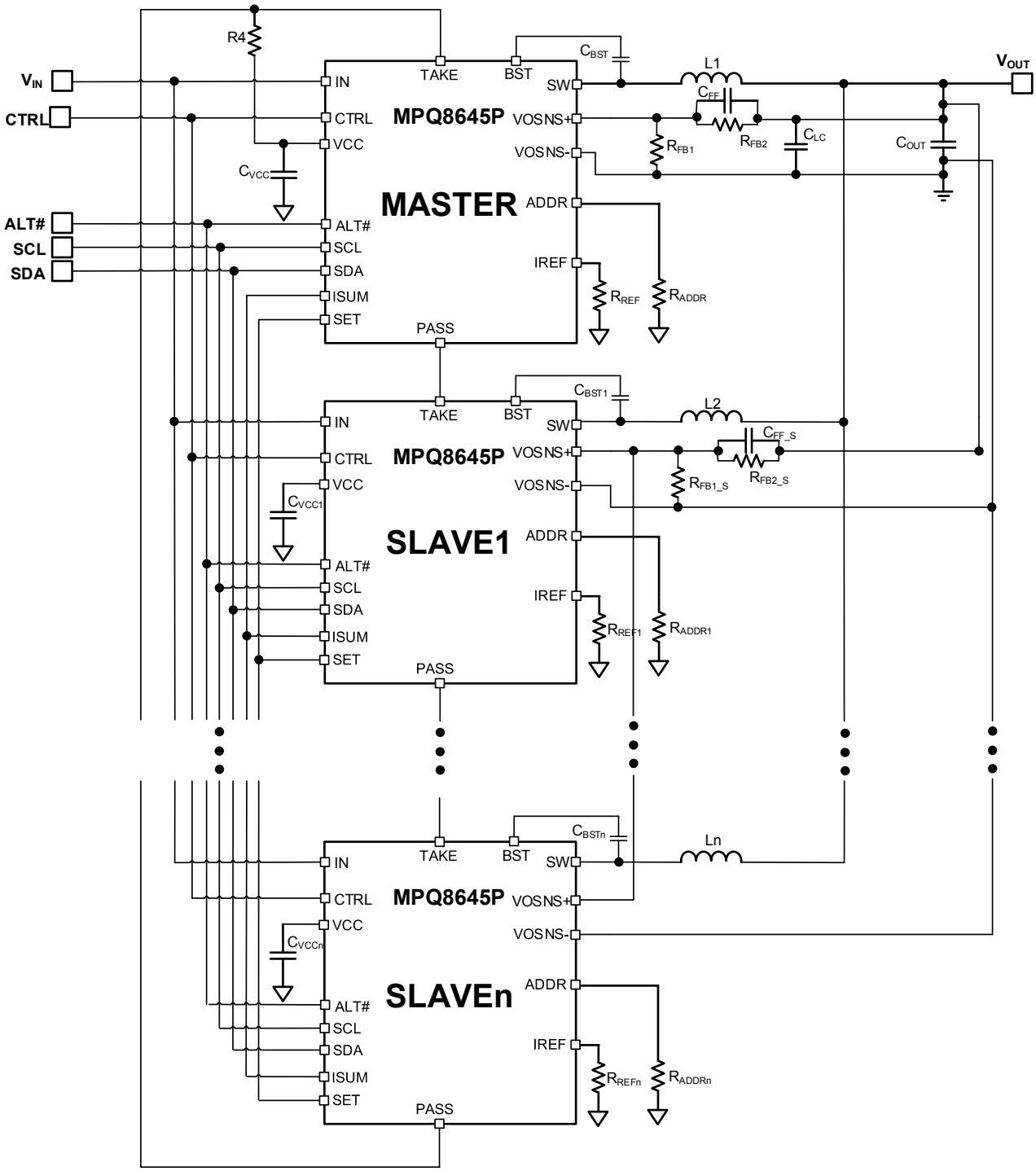

Figure 2: Multi-Phase (n+1) Configuration

MPS Proprietary Information. Patent Protected. Unauthorized Photocopy and Duplication Prohibited.
© 2020 MPS. All Rights Reserved.

MULTI-PHASE OPERATION *(continued)*

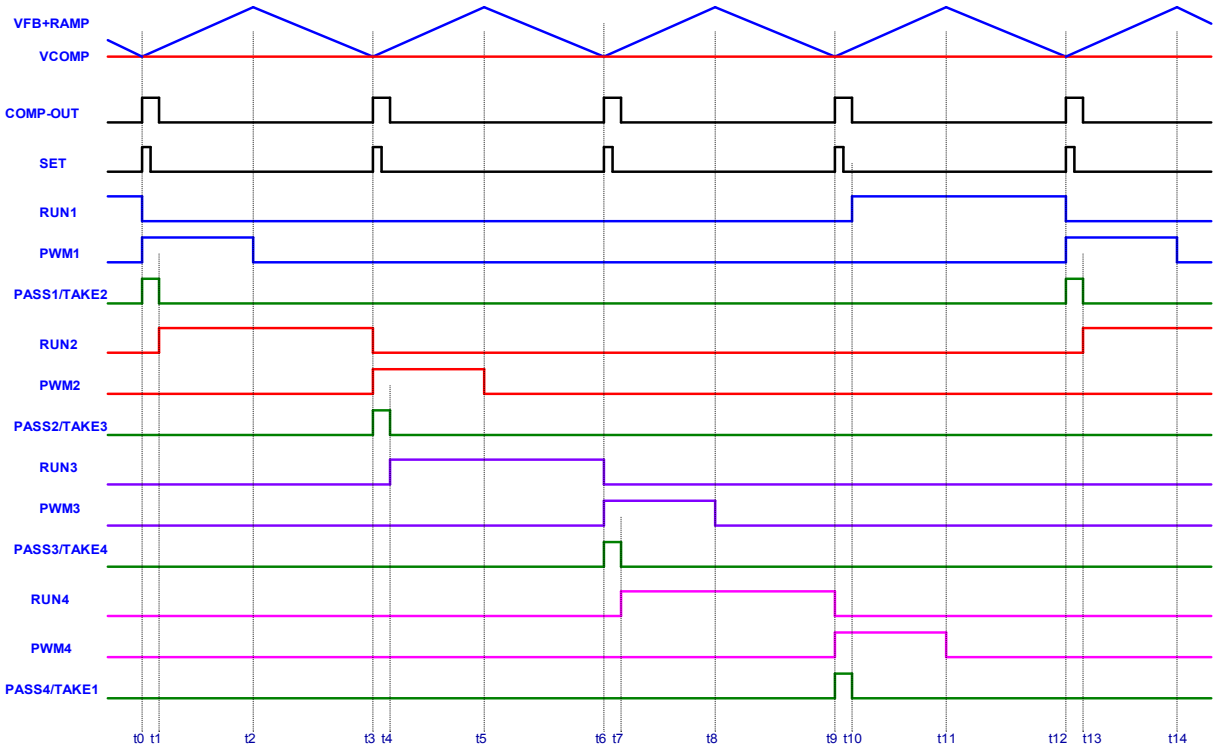

Figure 3: Multi-Phase Interleaved Operation (Steady State)

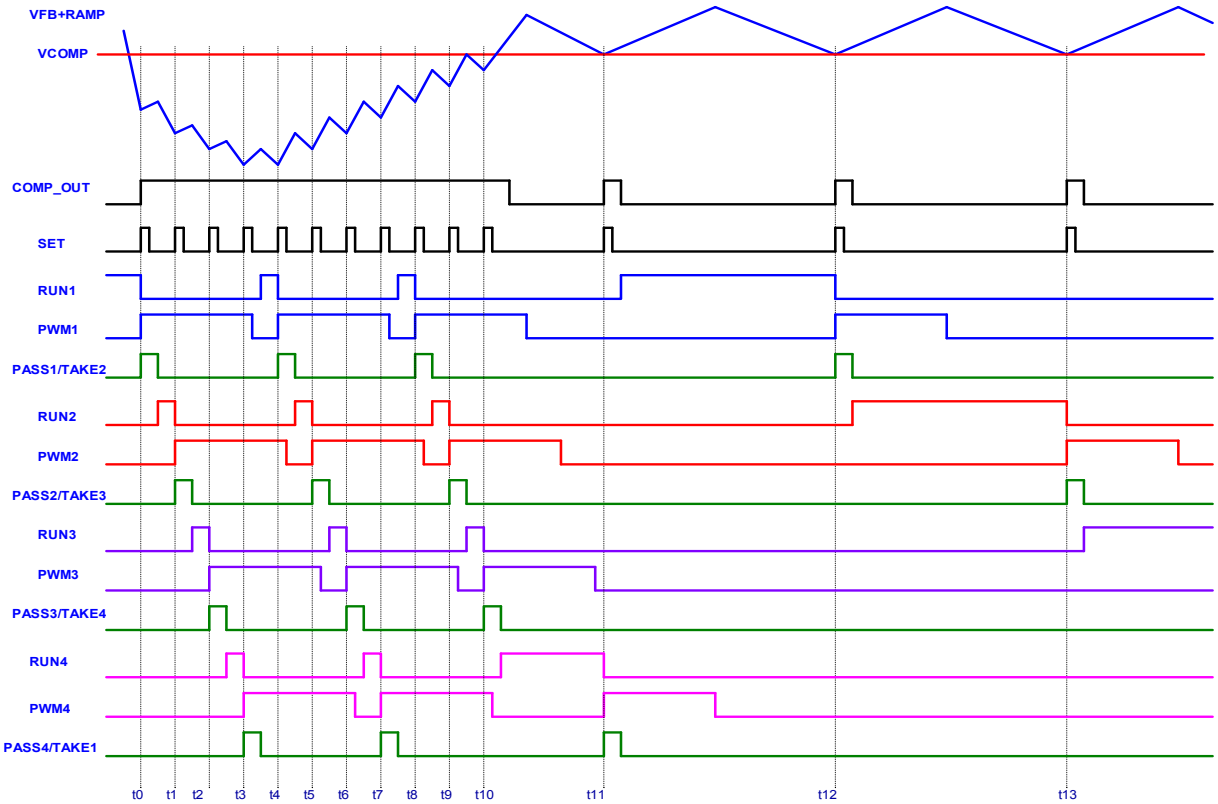

Figure 4: Multi-Phase Interleaved Operation (Load Step-Up Response)

MPS Proprietary Information. Patent Protected. Unauthorized Photocopy and Duplication Prohibited.
© 2020 MPS. All Rights Reserved.

OPERATION

MCOT OPERATION

The MPQ8645P is a fully integrated, synchronous, step-down, switch-mode converter that uses multi-phase constant-on-time (COT) control to provide a fast transient response. The selectable internal ramp compensation stabilizes the system and makes it easy to use.

Master/Slave Auto-Detection

One master phase is needed for both single- and multiple-phase operation. To be configured as a master phase, the TAKE pin of the phase must be pulled high to a voltage source. The PASS/TAKE pins of all phases are connected in a daisy chain configuration. The PASS pin of the last phase is connected back to the TAKE pin of the first (master) phase. For single-phase operation, the PASS and TAKE pins are connected together. After power-up, the master phase is determined, and the rest of phases are slave phases.

MCOT Operation (Master)

The master phase has the following functions:

- Accepts both write and read commands through the PMBus from the system.
- Generates the SET signals.
- Manages start-up, shutdown, and all protections.
- Monitors fault alerts from the slave phases through the PG pin.
- Starts the first on pulse.
- Starts the on pulse when receiving RUN and SET signals.
- Determines the on pulse width of its own phase based on the per-phase and total current.
- Carries on the PASS/TAKE signal.

MCOT Operation (Slave)

The slave phase has the following functions:

- Accepts write commands through the PMBus from the system.
- Takes the SET signal from the master.
- Sends an OV/UV/OT alert to the master through PG.
- Starts the on pulse when receiving RUN and SET signals.
- Determines the on pulse width of its own phase based on the per-phase and total current.
- Carries on the PASS/TAKE signal.

Figure 3 shows the details of MCOT operation.

At t0, VFB + RAMP drops below the reference level (VCOMP) in the master phase and generates a SET signal. All phases receive this SET signal, but only the phase that has the active RUN signal takes action (the master, in this case). Therefore, the master turns on the high-side MOSFET (HS-FET). Meanwhile, a fixed on pulse is generated on PASS, and this signal is passed to the TAKE pin of Slave 1.

At t1, the falling edge of the TAKE pin of Slave 1 activates the RUN signal. From this point on, Slave 1 is waiting for the SET signal to turn on the HS-FET.

At t2, the on pulse of the master phase expires, and the HS-FET turns off. The on-pulse width is fixed with the given input voltage, output voltage, and selected switching frequency. The on pulse width is fine-tuned based on the per-phase and total currents.

At t3, VFB + RAMP drops below VCOMP in the master phase again. Only Slave 1 has an active RUN signal, so it turns on its HS-FET. All other phases ignore this SET signal. Meanwhile, Slave 1 generates a fixed on pulse on PASS, and this on pulse is passed to the TAKE pin of Slave 2.

The above operation continues, and the phase turns on its HS-FETs one by one for a fixed on time. The operation is carried on through the PASS/TAKE loop, and only the phase that has the RUN signal turns on the HS-FET when the SET signal is ready.

The MPQ8645P utilizes constant-on-time (COT) control, which provides super-fast load transient response. When a load step-up occurs, the FB signal is lower than REF, so the SET signal is generated more frequently than during steady state to respond to the load transient. This depends on the load transient step size and slew rate. The SET signal can be

MPS Proprietary Information. Patent Protected. Unauthorized Photocopy and Duplication Prohibited.
© 2020 MPS. All Rights Reserved.

generated with the minimum 50ns interval (i.e. the next phase can be turned on in as little as 50ns after the turn-on of the previous phase to provide super-fast load transient response). Figure 4 shows the detailed operation.

Ramp Compensation

The MPQ8645P provides internal ramp compensation to support all types of output capacitors. Only the master phase utilizes ramp compensation. Whenever a SET signal is generated, the ramp is increased with a certain amount of amplitude in a fixed period. The ramp is then discharged with an adaptive slew rate. This ramp signal is superimposed to the FB signal, so when the superimposed ramp + FB signal reaches the REF signal, a new SET signal is generated. The ramp is selectable through the PMBus command of D0h[3:1] to support a wide range of operation configurations. The larger the ramp is, the less jitter the system will have. However, a larger ramp also results in slower load transient response. It is recommended to choose an optimal ramp based on your particular design if load transient response is a critical design target.

In single-phase operation, the ramp does not need to be reset by the SET signal, and can be reset by pulse-width modulation (PWM) instead. This option can be selected through the PMBus command EAh[3]. When EAh[3] = 0, the ramp is reset by PWM. This is only for single-phase operation. When EAh[3] = 1b'1, the ramp is reset by the SET signal. This is optimal for both single-phase and multi-phase operations.

Mode Selection

The MPQ8645P provides both forced continuous conduction mode (CCM) operation and pulse-skip operation under light-load condition. The operation mode can be chosen through the PMBus command D2h[0]. When D2h[0] = 1b'1, the device operates in CCM. When D2h[0] = 0, the device operates in pulse-skip operation.

Phase-Shedding Operation (Slave)

For multi-phase operation, slave phases can be enabled or disabled through the PMBus or PS# pin. The phase-shedding function is disabled in the master phase to ensure proper operation.

If phase shedding is controlled through the PMBus, the E5h[0] command is used. When E5h[0] = 1b'0, slave phases are enabled. When E5h[0] = 1b'1, slave phases are disabled.

If phase shedding is controlled through the PS# pin, the E5h[1] command must be set to 1b'1. In this way, the slave phases are enabled when PS# is pulled high. Slave phases are disabled when PS# is pulled low.

Soft Start (SS)

The soft-start (SS) time can be programmed through the PMBus command TON_RISE (61h). The minimum SS time is 1ms when 61h = 0x0000. Selectable SS time options include 1ms, 2ms, 4ms, 8ms, and 16ms.

Pre-Bias Start-Up

The MPQ8645P is designed for monotonic start-up into pre-biased loads. If the output voltage is pre-biased to a certain voltage during start-up, the IC disables switching for both the high-side and low-side switches until the internal reference voltage exceeds the sensed output voltage at the FB pin. Before the reference voltage reaches the pre-biased FB level, if the BST voltage is lower than the 2.4V threshold, the low-side MOSFET (LS-FET) is forced on for about 200ns to charge up the BST voltage.

Output Voltage Discharge

When the MPQ8645P is disabled through CTRL or the PMBus OPERATION command, output voltage discharge mode is enabled if this function is selected. Both the HS-FET and the LS-FET are latched off. A discharge MOSFET connected between SW and GND turns on to discharge the output voltage. The typical switch on resistance of this MOSFET is about 50Ω. Once the FB voltage drops below 10% * REF, the discharge MOSFET turns off. This feature can be enabled or disabled through PMBus command MFR_CTRL_01 (D1h[6]).

Current Sense and Over-Current Protection (OCP)

The MPQ8645P features on-die current sensing and a programmable, positive, current-limit threshold. The MPQ8645P provides both inductor valley current limiting (set by the PMBus command D7h) and output DC limiting

MPS Proprietary Information. Patent Protected. Unauthorized Photocopy and Duplication Prohibited.
© 2020 MPS. All Rights Reserved.

(set by the PMBus command 46h).

Inductor Valley Over-Current Protection (D7h)

During the LS-FET on state, the SW current (inductor current) is sensed and monitored cycle by cycle. When FB drops below the reference, the HS-FET is only allowed to turn on whenever no over-current (OC) condition is detected during the LS-FET on state. Therefore, the inductor current is limited cycle by cycle. If 31 consecutive cycles of an OC condition are detected, over-current protection (OCP) is triggered.

During an OC or output short-circuit condition, if the output voltage drops below the under-voltage protection (UVP) threshold, the device enters OCP immediately.

Once OCP is triggered, the device either enters hiccup mode or latches off, depending on the PMBus selection. If it latches off, VCC or VIN must be power recycled to enable the part again.

The inductor valley over-current limit can be programmed through the PMBus command D7h. D7h only sets the per-phase inductor valley current limit, regardless of whether the device is operating in single-phase or multi-phase operation.

Output Over-Current (DC) Protection (46h)

The output DC current is sensed and monitored during operation. During an OC condition, if the sensed output DC current exceeds the 46h setting, the device enters OCP immediately.

Once OCP is triggered, the device enters hiccup mode or latches off, depending on the PMBus selection. If it latches off, VCC or VIN must be power recycled to enable the part again. The output over-current DC limit can be programmed through the PMBus command 46h, which limits the total output current of the rail.

Negative Inductor Current Limit

When the LS-FET detects a negative current lower than the limit set through the PMBus D5h[2] command, the part turns off the LS-FET for a certain period of time to limit the negative current. This period is set through the PMBus command D5h[3].

Under-Voltage Protection (UVP)

The MPQ8645P monitors the output voltage using the FB pin connected to the tap of a resistor divider to detect an under-voltage condition. If the FB voltage drops below the under-voltage protection (UVP) threshold (set through the PMBus VOUT_UV_FAULT_ LIMIT command), UVP is triggered. After UVP is triggered, the device either enters hiccup mode or latches off, depending on the PMBus selection. If it latches off, VCC or CTRL must be power recycled to enable the part again.

Over-Voltage Protection (OVP)

The MPQ8645P monitors the output voltage using the FB pin connected to the tap of a resistor divider to detect an over-voltage condition. See the MFR_OVP_NOCP_SET section on page 46 for detailed OVP responses.

Output Sinking Mode (OSM)

The MPQ8645P employs an output-sinking mode (OSM) to regulate the output voltage to the targeted value. When the FB voltage is above 105% * REF but below the OVP threshold, OSM is triggered. During OSM, the MPQ8645P runs in forced CCM. The device exits OSM when the HS-FET turns back on. OSM can be enabled and disabled through the PMBus command EAh bit[9].

Over-Temperature Protection (OTP)

The MPQ8645P has over-temperature protection (OTP). The IC monitors the junction temperature internally. If the junction temperature exceeds the threshold value (set through the PMBus command OT_FAULT_LIMIT), the converter shuts off. After OTP is triggered, the device either enters hiccup mode or latches off, depending on the PMBus command MFR_OVP_NOCP_SET. If it latches off, VCC or CTRL must be power recycled to enable the part again.

Output Voltage Setting

The internal DAC reference range of the MPQ8645P is 162mV to 672mV. To achieve a higher output voltage, an external or internal voltage divider can be selected. VOUT_SCALE_LOOP (29h) and MFR_CTRL_VOUT (D1h[1:0]) are used together to set different output voltages. Table 1

MPS Proprietary Information. Patent Protected. Unauthorized Photocopy and Duplication Prohibited.
© 2020 MPS. All Rights Reserved.

shows the relationship of VOUT_SCALE_LOOP (29h) and MFR_CTRL_VOUT (D1h[1:0]).

Table 1: VOUT_SCALE_LOOP vs MFR_CTRL_VOUT

FB Divider	VOUT_SCALE_ LOOP (29h)	MFR_CTRL_VOUT (D1h[1:0])
External	29h = R_{FB2} / (R_{FB1} + R_{FB2})	D1h[1:0] = 2'b00
Internal	29h = 0x03E8	D1h[1:0] = 2'b00
	29h = 0x01F4	D1h[1:0] = 2'b01
	29h = 0x00FA	D1h[1:0] = 2'b10
	29h = 0x007D	D1h[1:0] = 2'b11

It is *not* recommended to change VOUT_SCALE_LOOP (29h) and MFR_CTRL_ VOUT (D1h[1:0]) when the power stage is enabled.

External Voltage Divider

If an external voltage divider is used to set the output voltage, the MFR_CTRL_VOUT (D1h) can only be set to D1[0:0] = 2'b00. Figure 5 shows the configuration of an external voltage divider used. VOSNS+ and VOSNS- are connected to the output voltage sense point through a resistor divider (R_{FB1} and R_{FB2}).

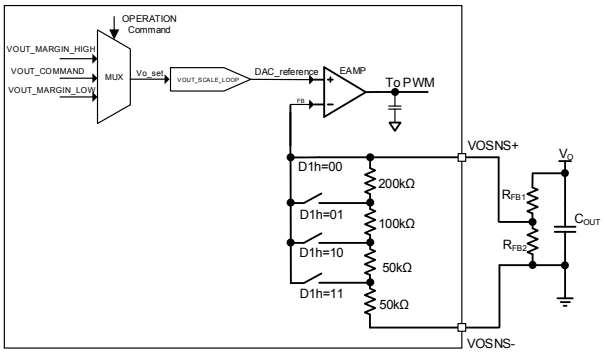

Figure 5: Output Voltage Set by External Resistor Divider

The MPQ8645P provides output voltage monitoring through register READ_VOUT (8Bh). To achieve the correct output voltage setting and monitoring, the registers VOUT_COMMAND (21h), VOUT_MARGIN_ HIGH (25h), VOUT_MARGIN_LOW (26h), and VOUT_SCALE_LOOP (29h) should be set correspondingly. The steps below show how to set the output voltage to 2.5V:

1. Determine the Vo_set source based on the OPERATION (01h) command. Assume that VOUT_COMMAND (21h) is selected.
2. Set D1[1:0] to 2'b00 for the external voltage divider option.
3. Select R_{FB1} and R_{FB2} to have a 600mV FB voltage. In this case, R_{FB2} / (R_{FB1} + R_{FB2}) = 0.24.
4. Set the VOUT_SCALE_LOOP (29h) to 0x00F0 to match the external voltage divider ratio (0.24).
5. Set the VOUT_COMMAND (21h) to 0x04E2 (LSB = 2mV). VOUT_COMMAND = 600mV / VOUT_SCALE_LOOP.
6. VOUT_COMMAND (21h) must be sent after VOUT_SCALE_LOOP (29h) and D1h. Otherwise, the change of VOUT_SCALE_ LOOP (29h) and D1h will not be effective.

Internal Voltage Divider

Figure 6 shows the configuration of the internal voltage divider. VOSNS+ and VOSNS- are connected directly to the output voltage sense point.

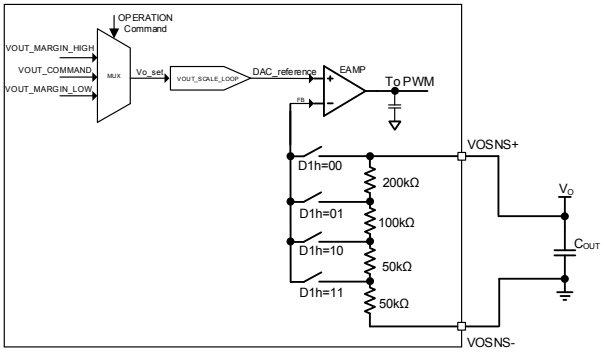

Figure 6: Output Voltage Set by Internal Resistors Divider

Table 2 shows the internal voltage divider options through MFR_CTRL_VOUT (D1h).

MPS Proprietary Information. Patent Protected. Unauthorized Photocopy and Duplication Prohibited.
© 2020 MPS. All Rights Reserved.

Table 2: Output Voltage Range with Internal Voltage Divider

MFR_CTRL_VOUT (D1h)	
Bits	**Description**
[1:0]	2'b00: V_{REF} / V_O = 1, V_O = 0.4V to 0.672V
	2'b01: V_{REF} / V_O = 0.5, V_O = 0.4V to 1.344V
	2'b10: V_{REF} / V_O = 0.25, V_O = 0.7V to 2.688V
	2'b11: V_{REF} / V_O = 0.125, V_O = 1.3V to 5.376V

The MPQ8645P provides output voltage monitoring through the register READ_VOUT (8Bh). To achieve the correct output voltage setting and monitoring, the registers VOUT_COMMAND (21h), VOUT_MARGIN_HIGH (25h), VOUT_MARGIN_LOW (26h), and VOUT_SCALE_LOOP (29h) should be set correspondingly. The steps below show how to set the output voltage to 2.5V.

1. Determine the Vo_set source based on the OPERATION (01h) command. Assume that VOUT_COMMAND (21h) is selected.
2. Choose the D1[1:0] value based on the Vo_set value. The D1[1:0] value is chosen so that the FB voltage is as close to 600mV as possible. In this case, both D1[1:0] = 2'b10 and D1[1:0] = 2'b11 can provide Vo = 2.5V, but D1[1:0] = 2'b10 yields a 625mV FB voltage, while D1[1:0] = 2'b11 yields a 312.5mV FB voltage. Choose D1[1:0] = 2'b10.
3. Set the VOUT_SCALE_LOOP (29h) to 0x00FA to match D1[1:0] = 2'b10.
4. Set the VOUT_COMMAND (21h) to 0x4E2 (LSB = 2mV).
5. VOUT_COMMAND (21h) must be sent after VOUT_SCALE_LOOP (29h) and D1h. Otherwise, the change of VOUT_SCALE_LOOP (29h) and D1h will not be effective.
6. The VOUT_COMMAND (21h) cannot exceed the minimum/maximum value specified in Table 2.

Power Good (PGOOD)

The MPQ8645P has a power good (PGOOD) output. PGOOD is the open drain of a MOSFET. Connect PGOOD to VDRV or another external voltage source less than 3.6V through a pull-up resistor (typically 100kΩ). After applying the input voltage, the MOSFET turns on so that PGOOD is pulled to GND before the soft start is ready. After the FB voltage reaches the threshold set by the PMBus command POWER_GOOD_ON and a delay set by the PMBus, PGOOD is pulled high. The delay can be chosen through the PMBus command MFR_CTRL_VOUT (D1h) [5:2].

When the converter encounters any fault (e.g. UV, OV, OT, UVLO, etc.), PGOOD is latched low. It cannot be pulled high again until a new soft start is initialized.

When the MPQ8645P is configured as the master in single- or multi-phase operation, the PG pin is used for fault indication. Therefore, PG must be pulled high to ensure proper operation. Otherwise, the MPQ8645P may enter protection response mode.

This slave fault detection feature can be enabled or disabled through the PMBus bit D0h[0].

If the input supply fails to power the MPQ8645P, PGOOD is clamped low even though it is tied to an external DC source through a pull-up resistor. Figure 7 shows the relationship between the PGOOD voltage and the pull-up current.

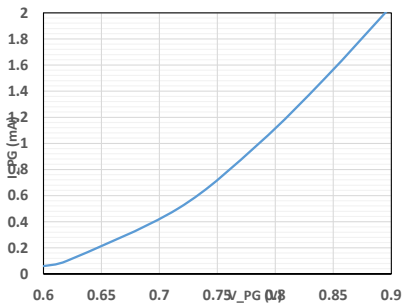

Figure 7: PGOOD Clamped Voltage vs. Pull-Up Current

MPS Proprietary Information. Patent Protected. Unauthorized Photocopy and Duplication Prohibited.
© 2020 MPS. All Rights Reserved.

APPLICATION INFORMATION

Selecting the Input Capacitor

The step-down converter has a discontinuous input current, and requires a capacitor to supply AC current to the converter while maintaining the DC input voltage. Use ceramic capacitors for the best performance. During the layout, place the input capacitors as close to IN as possible.

The capacitance can vary significantly with temperature. Capacitors with X5R and X7R ceramic dielectrics are recommended because they are fairly stable over a wide temperature range.

The capacitors must have a ripple current rating that exceeds the converter's maximum input ripple current. Estimate the input ripple current with Equation (1):

$$I_{CIN} = I_{OUT} \times \sqrt{\frac{V_{OUT}}{V_{IN}} \times (1 - \frac{V_{OUT}}{V_{IN}})} \quad (1)$$

The worst-case condition occurs at $V_{IN} = 2V_{OUT}$, calculated with Equation (2):

$$I_{CIN} = \frac{I_{OUT}}{2} \quad (2)$$

For simplification, choose an input capacitor with an RMS current rating that exceeds half the maximum load current.

The input capacitance value determines the converter input voltage ripple. Select a capacitor value that can meet any input voltage ripple requirements.

Estimate the input voltage ripple with Equation (3):

$$\Delta V_{IN} = \frac{I_{OUT}}{f_{SW} \times C_{IN}} \times \frac{V_{OUT}}{V_{IN}} \times (1 - \frac{V_{OUT}}{V_{IN}}) \quad (3)$$

The worst-case condition occurs at $V_{IN} = 2V_{OUT}$, calculated with Equation (4):

$$\Delta V_{IN} = \frac{1}{4} \times \frac{I_{OUT}}{f_{SW} \times C_{IN}} \quad (4)$$

Selecting the Output Capacitor

The output capacitor maintains the DC output voltage. The output voltage ripple can be estimated with Equation (5):

$$\Delta V_{OUT} = \frac{V_{OUT}}{f_{SW} \times L} \times (1 - \frac{V_{OUT}}{V_{IN}}) \times (R_{ESR} + \frac{1}{8 \times f_{SW} \times C_{OUT}}) \quad (5)$$

When using ceramic capacitors, the capacitance dominates the impedance at the switching frequency. Therefore, the output voltage ripple is dominated by the output capacitances. For simplification, estimate the output voltage ripple with Equation (6):

$$\Delta V_{OUT} = \frac{V_{OUT}}{8 \times f_{SW}^{2} \times L \times C_{OUT}} \times (1 - \frac{V_{OUT}}{V_{IN}}) \quad (6)$$

When using capacitors with a larger ESR (e.g. POSCAP, OSCON, etc.), the ESR dominates the impedance at the switching frequency. Therefore, the output voltage ripple can be determined by the ESR. For simplification, estimate the output ripple with Equation (7):

$$\Delta V_{OUT} = \frac{V_{OUT}}{f_{SW} \times L} \times (1 - \frac{V_{OUT}}{V_{IN}}) \times R_{ESR} \quad (7)$$

Selecting the Inductor

The inductor supplies constant current to the output load while being driven by the switching input voltage. A larger-value inductor results in less ripple current and a lower output ripple voltage, but also has a larger physical size, higher series resistance, and lower saturation current. Select an inductor value that sets the inductor peak-to-peak ripple current between 30% and 40% of the maximum switch current limit. Be sure to also design for a peak inductor current that is below the maximum switch current limit. Calculate the inductance value with Equation (8):

$$L = \frac{V_{OUT}}{f_{SW} \times \Delta I_L} \times (1 - \frac{V_{OUT}}{V_{IN}}) \quad (8)$$

Where ΔI_L is the peak-to-peak inductor ripple current.

Choose an inductor that will not saturate under the maximum inductor peak current. The peak inductor current can be calculated with Equation (9):

$$I_{LP} = I_{OUT} + \frac{V_{OUT}}{2 \times f_{SW} \times L} \times (1 - \frac{V_{OUT}}{V_{IN}}) \quad (9)$$

MPS Proprietary Information. Patent Protected. Unauthorized Photocopy and Duplication Prohibited.
© 2020 MPS. All Rights Reserved.

PCB Layout Guidelines

Efficient PCB layout is critical for stable operation. For best performance, refer to Figure 8 and follow the guidelines below:

1. Place the input MLCC capacitors as close to the IN and PGND pins as possible.
2. Place one 1μF to 4.7μF 0402 MLCC near pin1.
3. Place the major MLCC capacitors on the same layer as the MPQ8645P.
4. Maximize the VIN and PGND copper plane to minimize parasitic impedance.
5. Place as many PGND vias as possible as close to the pin as possible to minimize parasitic impedance and thermal resistance.
6. Place a VCC decoupling capacitor close to the device.
7. Connect AGND and PGND at the point of the VCC capacitor's ground connection.
8. Place the BST capacitor as close to BST and SW as possible.
9. Use a trace width of 20 mils or higher to route the path (a 0.1μF to 1μF bootstrap capacitor is recommended).
10. Place a REF capacitor close to TRK/REF to RGND.
11. Place one 10pF to 100pF MLCC between the two remote sense lines.

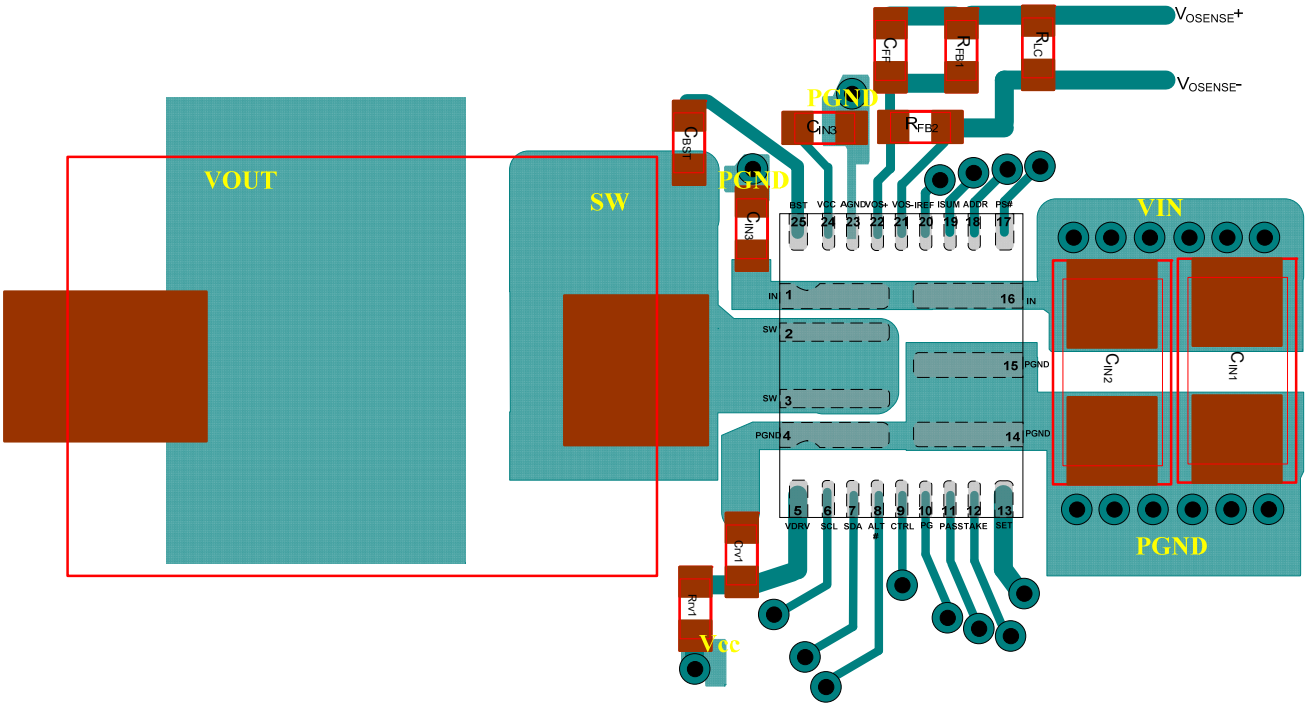

Figure 8: Example of PCB Layout (Placement and Top Layer PCB)

MPS Proprietary Information. Patent Protected. Unauthorized Photocopy and Duplication Prohibited.
© 2020 MPS. All Rights Reserved.

PMBUS INTERFACE

PMBus Serial Interface Description

The power management bus (PMBus) is an open-standard power management protocol that defines a means of communication with power conversion and other devices.

The PMBus is a two-wire, bidirectional serial interface, consisting of a data line (SDA) and a clock line (SCL). The lines are pulled to a bus voltage externally when they are idle. When connecting to the lines, a master device generates an SCL signal and device address, and arranges the communication sequence. This is based on I^2C operation principles. The MPQ8645P is a PMBus slave that supports both standard mode (100kHz) and fast mode (400kHz and 1000kHz). The PMBus interface adds flexibility to the power supply solution.

Slave Address

To support multiple MPQ8645P devices used on the same PMBus, use the ADDR pin to program the slave address for each MPQ8645P device. There is 10μA of current flowing out of ADDR. Connect a resistor between ADDR and AGND to set the ADDR voltage. The internal ADC converts the pin voltage to set the PMBus address. A maximum of 32 addresses can be set via ADDR pin. Table 3 shows the PMBus address for different resistor values from ADDR to AGND. Pre-set the register MFR_ADDR_PMBUS (D3h) to set the PMBus address.

For multi-phase configurations, the slave phases can share the same address as the masters or have different addresses, depending on the application needs. The slave phases can only accept write commands, and cannot accept read commands from the PMBus master. The master phase can accept both write and read commands from the PMBus master.

Start and Stop Conditions

The start and stop conditions are signaled by the master device, which signifies the beginning and end of the PMBus transfer. The start condition is defined as the SDA signal transitioning from high to low while the SCL is high. The stop condition is defined as the SDA signal transitioning from low to high while the SCL is high (see Figure 9).

Table 3: PMBus Address vs. ADDR Resistor

R_{ADDR} (kΩ)	Slave Address (R_IREF=60.4kΩ)	Slave Address (R_IREF=180kΩ)
4.99	30h	40h
15	31h	41h
24.9	32h	42h
34.8	33h	43h
45.3	34h	44h
54.9	35h	45h
64.9	36h	46h
75	37h	47h
84.5	38h	48h
95.3	39h	49h
105	3Ah	4Ah
115	3Bh	4Bh
124	3Ch	4Ch
133	3Dh	4Dh
147	3Eh	4Eh
154	3Fh	4Fh

The master then generates the SCL clocks and transmits the device address and the read/write direction bit (R/W) on the SDA line. Data is transferred in 8-bit bytes by the SDA line. Each byte of data is followed by an acknowledge bit (ACK).

PMBus Update Sequence

The MPQ8645P requires a start condition, a valid PMBus address, a register address byte, and a data byte for a single data update. The device acknowledges receipt of each byte by pulling the SDA line low during the high period of a single clock pulse. A valid PMBus address selects the MPQ8645P. The device performs an update on the falling edge of the LSB byte.

Protocol Usage

All PMBus transactions on the MPQ8645P are done using defined bus protocols. The following protocols are implemented:

- End byte with PEC
- Receive byte with PEC
- Write byte with PEC
- Read byte with PEC
- Write word with PEC
- Read word with PEC
- Block read with PEC

MPS Proprietary Information. Patent Protected. Unauthorized Photocopy and Duplication Prohibited.
© 2020 MPS. All Rights Reserved.

PMBus Bus Message Format

In the tables in Figure 10, unshaded cells indicate that the bus host is driving the bus actively, and shaded cells indicate that the MPQ8645P is driving the bus.

S = Start condition
Sr = Repeated start condition
P = Stop condition
R = Read bit
$\overline{W}$ = Write bit
A = Acknowledge bit (0)
$\overline{A}$ = Acknowledge bit (1)

"A" represents the acknowledge bit. The ACK bit is typically active low (logic 0) if the transmitted byte is received successfully by a device.

However, when the receiving device is the bus master, the acknowledge bit for the last byte read is a logic 1, indicated by $\overline{A}$ (see Figure 9).

Packet Error Checking (PEC)

The MPQ8645P PMBus interface supports the use of the packet error-checking (PEC) byte. The PEC byte is transmitted by the MPQ8645P during a read transaction or sent by the bus host during a write transaction.

The PEC byte is used by the bus host or the MPQ8645P to detect errors during a bus transaction (depending on whether the transaction is a read or a write). If the host determines that the PEC byte read during a read transaction is incorrect, it can decide to repeat the read if necessary. If the MPQ8645P determines that the PEC byte sent during a write transaction is incorrect, it ignores the command (does not execute it) and sets a status flag. Within a group command, the host can choose to send or not send a PEC byte as part of the message to the MPQ8645P.

PMBus Alert Response Address (ARA)

The PMBus alert response address (ARA) is a special address that can be used by the bus host to locate any devices that need to talk to it. A host typically uses a hardware interrupt pin to monitor the PMBus ALERT pins of a number of devices. When a host interruption occurs, the host issues a message on the bus using the PMBus receive byte, or the receive byte with PEC protocol.

The special address used by the host is 0x0C. Any devices that have a PMBus use the ALERT signal to return their own 7-bit address as the seven MSBs of the data byte. The LSB value is not used, and can be either 1 or 0. The host reads the device address from the received data byte, and proceeds to handle the alert condition.

More than one device may have an active PMBus ALERT signal and attempt to communicate with the host. In this case, the device with the lowest address dominates the bus and succeeds in transmitting its address to the host. The device that succeeds disables its PMBus alert signal. If the host sees that the PMBus alert signal is still low, it continues to read addresses until all devices that need to talk to it have successfully transmitted their addresses.

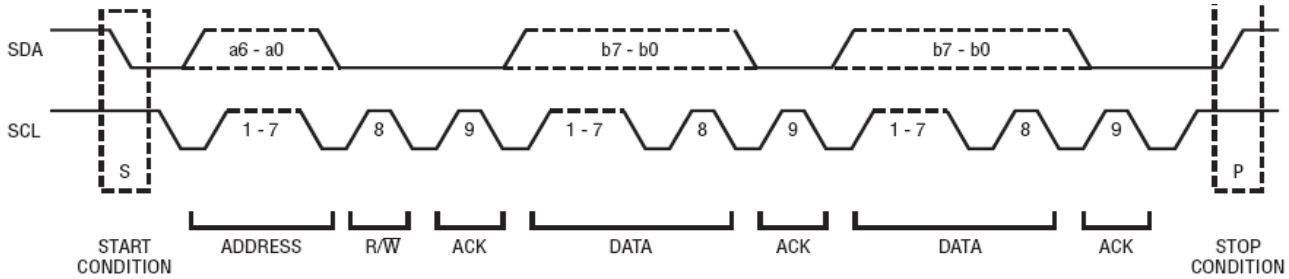

Figure 9: Data Transfer Over the PMBus

MPS Proprietary Information. Patent Protected. Unauthorized Photocopy and Duplication Prohibited.
© 2020 MPS. All Rights Reserved.

a) Send Byte and Send Byte with PEC

1	7	1	1	8	1	1
S	Slave Address	Wr	A	Data Byte	A	P

1	7	1	1	8	1	8	1	1
S	Slave Address	Wr	A	Data Byte	A	PEC	A	P

b) Receive Byte and Receive Byte with PEC

1	7	1	1	8	1	1
S	Slave Address	Rd	A	Data Byte	A	P

1	7	1	1	8	1	8	1	1
S	Slave Address	Rd	A	Data Byte	A	PEC	A	P

c) Write Byte and Write Byte with PEC

1	7	1	1	8	1	8	1	1
S	Slave Address	Wr	A	Command Code	A	Data Byte	A	P

1	7	1	1	8	1	8	1	8	1	1
S	Slave Address	Wr	A	Command Code	A	Data Byte	A	PEC	A	P

d) Write Word and Write Word with PEC

1	7	1	1	8	1	8	1	8	1	1
S	Slave Address	Wr	A	Command Code	A	Data Byte Low	A	Data Byte High	A	P

1	7	1	1	8	1	8	1	8	1	8	1	1
S	Slave Address	Wr	A	Command Code	A	Data Byte Low	A	Data Byte High	A	PEC	A	P

e) Read Byte and Read Byte with PEC

1	7	1	1	8	1	1	7	1	1	8	1	1
S	Slave Address	Wr	A	Command Code	A	S	Slave Address	Rd	A	Data Byte	A	P

1	7	1	1	8	1	1	7	1	1	8	1	8	1	1
S	Slave Address	Wr	A	Command Code	A	S	Slave Address	Rd	A	Data Byte	A	PEC	A	P

f) Read Word and Read Word with PEC

1	7	1	1	8	1	1	7	1	1	8	1
S	Slave Address	Wr	A	Command Code	A	S	Slave Address	Rd	A	Data Byte Low	A

8	1	1
Data Byte High	A	P

1	7	1	1	8	1	1	7	1	1	8	1
S	Slave Address	Wr	A	Command Code	A	S	Slave Address	Rd	A	Data Byte Low	A

8	1	8	1	1
Data Byte High	A	PEC	A	P

g) Block Read with PEC

1	7	1	1	8	1	1	7	1	1	8	1	
S	Slave Address	Wr	A	Command Code	A	Sr	Slave Address	Rd	A	Byte Count = N	A	…

8	1	8	1	…	8	1	1
Data Byte 1	A	Data Byte 2	A	…	Data Byte N	A	P

1	7	1	1	8	1	1	7	1	1	8	1	
S	Slave Address	Wr	A	Command Code	A	Sr	Slave Address	Rd	A	Byte Count = N	A	…

8	1	8	1	…	8	1	8	1	1
Data Byte 1	A	Data Byte 2	A	…	Data Byte N	A	PEC	A	P

Figure 10: PMBus Message Format

MPS Proprietary Information. Patent Protected. Unauthorized Photocopy and Duplication Prohibited.
© 2020 MPS. All Rights Reserved.

Data and Numerical Formats

The MPQ8645P uses a direct format internally to represent real-world values such as voltage, current, power, and temperature.

All numbers without a suffix in this document are decimals, unless explicitly designated otherwise.

Numbers in the binary format are indicated by the prefix “n’b”, where n is the binary count. For example, 5’b01010 indicates a 5-bit binary data, and the data is 01010.

The suffix “h” indicates a hexadecimal format, which is used for the register address numbers in this document.

The symbol “0x” indicates a hexadecimal format, which is used for the value in the register. For example, 0xA3 is a 1-byte number whose hexadecimal value is A3.

PMBus Communication Failure

A data transmission fault occurs when the data is not transferred between the devices properly. There are several types of data transmission faults listed below:

- Sending too few data
- Reading too few data
- Sending too many bytes
- Reading too many bytes
- Improperly set read bit in the address byte
- Unsupported command code

PMBus Reporting and Status Monitoring

The MPQ8645P supports real-time monitoring for some operation parameters and status with the PMBus interface (see Table 4).

Table 4: PMBus Monitored Parameters and Status

Parameter/Status	PMBus
Output voltage	1.25mV/LSB
Output current	60.5mA/LSB
Temperature	1˚C/LSB
Input voltage	25mV/LSB
V_{IN} OV	✓
V_{IN} UV	✓
V_{IN} OV warn	✓
V_{IN} UV warn	✓
V_O OV	✓
V_O UV	✓
Over-temperature (OT)	✓
OT warn	✓
V_O OC	✓
V_O OC warn	✓

Multi-Time Programming (MTP)

The MPQ8645P has built-in multiple-time programming (MTP) cells to store user configurations. The standard command of 15h (STORE_USER_ALL) is not currently supported in the MPQ8645P. However, the MTP cells can be programmed through the following command combination:

E7h (2000h) → E7h (1000h) → E7h (4000h)

In the MPS GUI for the MPQ8645P, the above commands are integrated together and named 15h (STORE_USER_ALL). The MPS GUI supports the 15h command.

When MTP is being programmed, the VCC voltage may rise as high as 5V. Be cautious if VCC is connected to circuits that cannot take such high voltage. The MTP programming typically takes about 300ms.

MPS Proprietary Information. Patent Protected. Unauthorized Photocopy and Duplication Prohibited.
© 2020 MPS. All Rights Reserved.

REGISTER MAP

Name	Code	Type	Bytes	Default Value	MTP?
OPERATION	01h	R/W w/ PEC	1	0x80	Yes
ON_OFF_CONFIG	02h	R/W w/ PEC	1	0x16	Yes
CLEAR_FAULTS	03h	Send byte w/ PEC	0	-	
WRITE_PROTECT	10h	R/W w/ PEC	1	0x00	Yes
STORE_USER_ALL	15h	Send byte w/ PEC	0	-	
RESTORE_USER_ALL	16h	Send byte w/ PEC	0	-	
CAPABILITY	19h	R w/ PEC	1	0xB0	
VOUT_MODE	20h	R w/ PEC	1	0x40	
VOUT_COMMAND	21h	R/W w/ PEC	2	0x0258 (1.2V)	Yes
VOUT_MAX	24h	R/W w/ PEC	2	0x0ABE (5.5V)	Yes
VOUT_MARGIN_HIGH	25h	R/W w/ PEC	2	0x02A0 (1.344V)	Yes
VOUT_MARGIN_LOW	26h	R/W w/ PEC	2	0x0200 (1.024V)	Yes
VOUT_SCALE_LOOP	29h	R/W w/ PEC	2	0x01F4 (0.5)	Yes
VOUT_MIN	2Bh	R/W w/ PEC	2	0x00FA (0.5V)	Yes
VIN_ON	35h	R/W w/ PEC	2	0x0020 (8V)	Yes
VIN_OFF	36h	R/W w/ PEC	2	0x00014 (5V)	Yes
IOUT_OC_FAULT_LIMIT	46h	R/W w/ PEC	2	0x00A1 (39A)	Yes
IOUT_OC_WARN_LIMIT	4Ah	R/W w/ PEC	2	0x0091 (35A)	Yes
OT_FAULT_LIMIT	4Fh	R/W w/ PEC	2	0x009B(155ºC)	Yes
OT_WARN_LIMIT	51h	R/W w/ PEC	2	0x0091 (145ºC)	Yes
VIN_OV_FAULT_LIMIT	55h	R/W w/ PEC	2	0x0021 (16.5V)	Yes
VIN_OV_WARN_LIMIT	57h	R/W w/ PEC	2	0x0021 (16.5V)	Yes
VIN_UV_WARN_LIMIT	58h	R/W w/ PEC	2	0x0010 (4V)	Yes
TON_DELAY	60h	R/W w/ PEC	2	0x0000 (0ms)	Yes
TON_RISE	61h	R/W w/ PEC	2	0x0001 (2ms)	Yes
STATUS_BYTE	78h	R w/ PEC	1		
STATUS_WORD	79h	R w/ PEC	2		
STATUS_VOUT	7Ah	R w/ PEC	1		
STATUS_IOUT	7Bh	R w/ PEC	1		
STATUS_INPUT	7Ch	R w/ PEC	1		
STATUS_TEMPERATURE	7Dh	R w/ PEC	1		
STATUS_CML	7Eh	R w/ PEC	1		
READ_VIN	88h	R w/ PEC	2		
READ_VOUT	8Bh	R w/ PEC	2		
READ_IOUT	8Ch	R w/ PEC	2		
READ_TEMPERATURE_1	8Dh	R w/ PEC	2		
PMBUS_REVISION	98h	R w/ PEC	1	0x33h, ASCII “13” (PMBus 1.3)	
MFR_ID	99h	Block read w/ PEC	1(byte)+ 3(data)	0x4D 0x50 0x53, ASCII”MPS”	
MFR_MODEL	9Ah	Block read w/ PEC	1(byte)+ 8(data)	0x4D 0x50 0x51 0x38 0x36 0x34 0x35 0x50, ASCII”MPQ8645P”	
MFR_REVISION	9Bh	Block read w/ PEC	1(byte)+ 1(data)	0x31, ASCII”1” (REV 1)	Yes*
MFR_4_DIGIT	9Dh	Block read w/ PEC	1(byte)+ 6(data)	0x31 0x36 0x30 0x30 0x30 0x30 (MPQ8645P 4-digit 0000)	Yes*

MPS Proprietary Information. Patent Protected. Unauthorized Photocopy and Duplication Prohibited.
© 2020 MPS. All Rights Reserved.

REGISTER MAP *(continued)*

Name	Code	Type	Bytes	Default Value	MTP?
MFR_CTRL_COMP	D0h	R/W w/ PEC	1	0x0D	Yes
MFR_CTRL_VOUT	D1h	R/W w/ PEC	1	0x40	Yes
MFR_CTRL_OPS	D2h	R/W w/ PEC	1	0x05	Yes
MFR_ADDR_PMBUS	D3h	R/W w/ PEC	1	0x00	Yes
MFR_VOUT_OVP_FAULT_LIMIT	D4h	R/W w/ PEC	1	0x00	Yes
MFR_OVP_NOCP_SET	D5h	R/W w/ PEC	1	0x00	Yes
MFR_OT_OC_SET	D6h	R/W w/ PEC	1	0x00	Yes
MFR_OC_PHASE_LIMIT	D7h	R/W w/ PEC	1	0x14 (30A)	Yes
MFR_HICCUP_ITV_SET	D8h	R/W w/ PEC	1	0x00	Yes
MFR_PGOOD_ON_OFF	D9h	R/W w/ PEC	1	0x00	Yes
MFR_VOUT_STEP	DAh	R/W w/ PEC	1	0x00	Yes
MFR_LOW_POWER	E5h	R/W w/ PEC	1	0x00	Yes
MFR_CTRL	EAh	R/W w/ PEC	2	bit[9]=0, bit[3]=0	Yes

Note:

* For manufacturer write only.

MPS Proprietary Information. Patent Protected. Unauthorized Photocopy and Duplication Prohibited.
© 2020 MPS. All Rights Reserved.

OPERATION (01h)

OPERATION is a paged register. The OPERATION command turns the converter output on or off in conjunction with the input from the CTRL pin. OPERATION also sets the output voltage to the upper or lower margin voltages. The unit remains in the commanded operating mode until a subsequent OPERATION command or a change in the state of the CTRL pin instructs the converter to change to another mode. The OPERATION command also re-enables the converter after a fault-triggered shutdown. Writing an off command followed by an on command clears all faults. Writing only an on command after a fault-triggered shutdown will not clear the fault registers.

Command	OPERATION							
Format	Unsigned binary							
Bit	7	6	5	4	3	2	1	0
Access	R/W	R/W	R/W	R/W	R/W	R/W	R	R
Function							X	X
Default value	1	0	0	0	0	0	X	X

Bit[7:6]	Bit[5:4]	Bit[3:2]	Bit[1:0]	On/off	Margin state	01h
00	XX	XX	XX	Immediate off	N/A	0x00
01	XX	XX	XX	Immediate off	N/A	0x60
10	00	XX	XX	On	Off	0x80
10	01	01	XX	On	Margin low (ignore fault)	0x94
10	01	10	XX	On	Margin low (act on fault)	0x98
10	10	01	XX	On	Margin high (ignore fault)	0xA4
10	10	10	XX	On	Margin high (act on fault)	0xA8

ON_OFF_CONFIG (02h)

The ON_OFF_CONFIG command configures the combination of the CTRL input and the PMBus commands to turn the converter on and off. This includes how the converter responds when an input voltage is applied.

Command	OPERATION							
Format	Unsigned binary							
Bit	7	6	5	4	3	2	1	0
Access	R	R	R	R/W	R/W	R/W	R/W	R
Function	X	X	X	on	op	ctrl	pol_ctrl	delay
Default value	0	0	0	1	0	1	1	0

on

The on bit sets the default to either operate whenever the input voltage is present, or for the on/off to be controlled by CTRL and PMBus commands.

Bit[4] Value	Meaning
0	Converter powers up whenever the input voltage is present, regardless of state the of the CTRL pin.
1	Converter does not power up until commanded by the CTRL pin and OPERATION command (as programmed in bit[3:0]).

op

The op bit controls how the converter responds to the OPERATION commands.

Bit[3] Value	Meaning
0	Converter ignores the “on” bit in the OPERATION command from the PMBus.
1	Converter responds to the “on” bit in the OPERATION command from the PMBus.

MPS Proprietary Information. Patent Protected. Unauthorized Photocopy and Duplication Prohibited.
© 2020 MPS. All Rights Reserved.

ctrl

The ctrl bit controls how the converter responds to the CTRL pin.

Bit[2] Value	Meaning
0	Converter ignores the CTRL pin (on/off controlled only by the OPERATION command).
1	Converter requires the CTRL pin to be asserted to power up. Depending on the bit[3] op bit, the OPERATION command may also be required to instruct the converter to power up.

pol_ctrl

The pol_ctrl bit sets the polarity of the CTRL pin.

Bit[1] Value	Meaning
0	Active low (pull CTRL pin low to start the converter).
1	Active high (pull CTRL pin high to start the converter).

delay

The delay bit sets the turn-off action when the converter is commanded off through the PMBus. This bit is read-only, and cannot be modified by the end user.

Bit[0] Value	Meaning
0	TOFF_DELAY, TOFF_FALL

CLEAR_FAULTS (03h)

The CLEAR_FAULTS command resets all stored warning and fault flags. If a fault or warning condition still remains when the CLEAR_FAULTS command is issued, the ALT# signal may not be cleared or is reasserted almost immediately. Issuing a CLEAR_FAULTS command will not cause the converter to restart in the event of a fault turn-off. The converter restart must be done by issuing an OPERATION command after the fault condition is cleared. This command uses the PMBus to send the byte protocol.

WRITE PROTECT (10h)

The WRITE_PROTECT command controls writes to the converter. This command provides protection against accidental changes. This command is not intended to provide protection against deliberate or malicious changes to the converter's configuration or operation.

All the supported commands may have their parameters read, regardless of the WRITE_PROTECT settings.

Bit[7:0] Value								Meaning
0	0	0	0	0	0	0	0	Enables writes to all commands.
0	0	1	0	0	0	0	0	Disables all writes except to the WRITE_PROTECT, OPERATION, PAGE, ON_OFF_CONFIG, and VOUT_COMMAND commands.
0	1	0	0	0	0	0	0	Disables all writes except to the WRITE_PROTECT, OPERATION, and PAGE commands.
1	0	0	0	0	0	0	0	Disables all writes except to the WRITE_PROTECT command.

When 10h is set to a value other than 0x00, in order to program to MTP, 15h must be programmed through the MPS GUI. A separate MTP command of E7h cannot be used. See the MTP Programming section on page 29 for details regarding MTP programming.

The default value of 10h is 0x00.

STORE_USER_ALL (15h)

Write all data from the registers to the internal MTPs. This process operates when the MPQ8645P receives a STORE_USER_ALL command from the PMBus interface. The MPQ8645P does not currently support a standard 15h command, but can accept a 15h command from the MPS GUI for the MPQ8645P. See the MTP Programming section on page 29 for details.

MPS Proprietary Information. Patent Protected. Unauthorized Photocopy and Duplication Prohibited.
© 2020 MPS. All Rights Reserved.

The following registers can be stored using STORE_USER_ALL.

• OPERATION (01h)	• TON_RISE (61h)
• ON_OFF_CONFIG (02h)	• TOFF_DELAY (64h)
• WRITE_PROTECT (10h)	• MFR_REVISION (9Bh)
• VOUT_COMMAND (21h)	• MFR_4_DIGIT (9Dh)
• VOUT_MAX (24h)	• MFR_CTRL_COMP (D0h)
• VOUT_MARGIN_HIGH (25h)	• MFR_CTRL_VOUT (D1h)
• VOUT_MARGIN_LOW (26h)	• MFR_CTRL_OPS (D2h)
• VOUT_SCALE_LOOP (29h)	• MFR_ADDR_PMBUS (D3h)
• VOUT_MIN (2Bh)	• MFR_VOUT_OVP_FAULT_LIMIT (D4h)
• VIN_ON (35h)	• MFR_OVP_NOCP_SET (D5h)
• VIN_OFF (36h)	• MFR_OT_OC_SET (D6h)
• IOUT_OC_FAULT_LIMIT (46h)	• MFR_OC_PHASE_LIMIT (D7h)
• IOUT_OC_WARN_LIMIT (4Ah)	• MFR_HICCUP_ITV_SET (D8h)
• OT_FAULT_LIMIT (4Fh)	• MFR_PGOOD_ON_OFF (D9h)
• OT_WARN_LIMIT (51h)	• MFR_VOUT_STEP (DAh)
• VIN_OV_FAULT_LIMIT (55h)	• MFR_LOW_POWER (E5h)
• VIN_OV_WARN_LIMIT (57h)	• MFR_CTRL (EAh)
• VIN_UV_WARN_LIMIT (58h)	• MFR_LOW_POWER (E5h)
• TON_DELAY (60h)	• MFR_CTRL (EAh)

RESTORE_USER_ALL (16h)

The RESTORE_USER_ALL command instructs the MPQ8645P to copy the entire contents of the MTP values to the matching locations in the registers. The values in the registers are overwritten by the value retrieved from the MTP. Any items in the MTPs that do not have matching locations in the operating memory are ignored.

The RESTORE_USER_ALL command can be used while the MPQ8645P is operating. However, the MPQ8645P may be unresponsive during operation with unpredictable, undesirable, or even catastrophic results, and therefore it is not recommended.

This command is write-only.

CAPABILITY (19h)

The CAPABILITY command returns information about the PMBus functions supported by the MPQ8645P. This command is read with the PMBus read byte protocol.

Command	CAPABILITY							
Format	Unsigned binary							
Bit	7	6	5	4	3	2	1	0
Access	R	R	R	R	R	R	R	R
Function	PEC	Max bus speed		Alert	X	X	X	X
Default value	1	0	1	1	0	0	0	0
	PEC supported, max speed 1MHz, supports PMBus alert and ARA.							

Bit[6:5] Value		Meaning
0	0	Maximum supported bus speed is 100kHz.
0	1	Maximum supported bus speed is 1MHz.
1	0	Maximum supported bus speed is 400kHz.
1	1	Reserved.

The default value of 19h is 0xB0.

MPS Proprietary Information. Patent Protected. Unauthorized Photocopy and Duplication Prohibited.
© 2020 MPS. All Rights Reserved.

VOUT_MODE (20h)

The VOUT_MODE command reads and commands the output voltage. The 3 MSBs determine the data format (only direct format is supported in MPQ8645P), and the other 5 bits represent the exponent used in the output voltage read/write commands.

The default value of 20h is 0x40.

VOUT_COMMAND (21h)

VOUT_COMMAND sets the output voltage of the MPQ8645P. VOUT_COMMAND and VOUT_SCALE_LOOP together determine the feedback reference voltage: VOUT_COMMAND * VOUT_SCALE_LOOP.

The Output Voltage Setting section on page 22 details how to set the output voltage.

Command	VOUT_COMMAND															
Format	Direct															
Bit	15	14	13	12	11	10	9	8	7	6	5	4	3	2	1	0
Access	R	R	R	R	R/W	R/W	R/W	R/W	R/W	R/W	R/W	R/W	R/W	R/W	R/W	R/W
Function	X															
Default value	0	0	0	0	0	0	1	0	0	1	0	1	1	0	0	0

The value is unsigned, and 1LSB = 2mV. The default value of 21h is 1.2V, which is 0x0258.

VOUT_MAX (24h)

The VOUT_MAX command sets an upper limit on the output voltage of the converter to enable command regardless of any other commands or combinations. The intent of this command is to provide a safeguard against the output voltage accidentally being set to a possibly destructive level, rather than to be the primary output over-voltage protection.

Command	VOUT_MAX															
Format	Direct															
Bit	15	14	13	12	11	10	9	8	7	6	5	4	3	2	1	0
Access	R	R	R	R	R/W	R/W	R/W	R/W	R/W	R/W	R/W	R/W	R/W	R/W	R/W	R/W
Function	X															
Default value	0	0	0	0	1	0	1	1	1	0	1	1	1	0	0	0

If an attempt is made to program the output voltage higher than the limit set by this command, the device responds as follows:

- The commanded output voltage is set to VOUT_MAX.
- The NONE OF THE ABOVE bit is set in STATUS_BYTE.
- The VOUT bit is set in STATUS_WORD.
- The VOUT_MAX_MIN warning bit is set in the STATUS_VOUT register.
- The device notifies the host.

The value is unsigned, and 1LSB = 2mV. The maximum value of VOUT_MAX is 5.5V, and the default value is 5.5V. Therefore, the default value of 24h is 0x0ABEh.

VOUT_MARGIN_HIGH (25h)

Command	VOUT_MARGIN_HIGH															
Format	Direct															
Bit	15	14	13	12	11	10	9	8	7	6	5	4	3	2	1	0
Access	R	R	R	R	R/W	R/W	R/W	R/W	R/W	R/W	R/W	R/W	R/W	R/W	R/W	R/W
Function	X	X	X	X												
Default value	0	0	0	0	0	0	1	0	1	0	1	0	0	0	0	0

The value is unsigned, and 1LSB = 2mV. The default value is 1.344V. Therefore, the default value of 25h is 0x02A0.

MPS Proprietary Information. Patent Protected. Unauthorized Photocopy and Duplication Prohibited.
© 2020 MPS. All Rights Reserved.

VOUT_MARGIN_LOW (26h)

Command	VOUT_MARGIN_LOW															
Format	Direct															
Bit	15	14	13	12	11	10	9	8	7	6	5	4	3	2	1	0
Access	R	R	R	R	R/W	R/W	R/W	R/W	R/W	R/W	R/W	R/W	R/W	R/W	R/W	R/W
Function	X	X	X	X												
Default value	0	0	0	0	0	0	1	0	0	0	0	0	0	0	0	0

The value is unsigned, and 1LSB = 2mV. The default value is 1.024V, which is 0x0200.

VOUT_SCALE_LOOP (29h)

VOUT_SCALE_LOOP sets the feedback resistor divider ratio, and is equal to VFB/VOUT. Regardless of whether an external or internal feedback resistor divider is used, VOUT_SCALE_LOOP should match the actual feedback resistor divider used.

Command	VOUT_SCALE_LOOP															
Format	Direct															
Bit	15	14	13	12	11	10	9	8	7	6	5	4	3	2	1	0
Access	R	R	R	R	R/W	R/W	R/W	R/W	R/W	R/W	R/W	R/W	R/W	R/W	R/W	R/W
Function	X															
Default value	0	0	0	0	0	0	0	1	1	1	1	1	0	1	0	0

The value is unsigned, and 1LSB = 0.001. The default value is 0.5, which is 0x01F4.

VOUT_MIN (2Bh)

The VOUT_MIN command sets a lower limit on the output voltage for the converter, regardless of any other commands or combinations. The intent of this command is to provide a safeguard against the output voltage accidentally being set to a possibly destructive level, rather than to be the primary output under-voltage protection.

Command	VOUT_MIN															
Format	Direct															
Bit	15	14	13	12	11	10	9	8	7	6	5	4	3	2	1	0
Access	R	R	R	R	R/W	R/W	R/W	R/W	R/W	R/W	R/W	R/W	R/W	R/W	R/W	R/W
Function	X															
Default value	0	0	0	0	0	0	0	0	1	1	1	1	1	0	1	0

If an attempt is made to program the output voltage below the limit set by this command, the device responds as follows:

- The commanded output voltage is set to VOUT_MIN.
- The NONE OF THE ABOVE bit is set in STATUS_BYTE.
- The VOUT bit is set in STATUS_WORD.
- The VOUT_MAX_MIN warning bit is set in the STATUS_VOUT register.
- The device notifies the host.

The minimum value of VOUT_MIN is 0.5V. The value is unsigned, and 1LSB = 2mV. The default value is 0.5V, which is 0x00FA.

VIN_ON (35h)

The VIN_ON command sets the value of the input voltage (in V), at which the converter should start to run if all other required power-up conditions are met. The VIN_ON value can be set between 4V and 15V with a 0.25V increment. The VIN_ON value should always be set higher than the VIN_OFF value, with enough margin so that there is no bouncing between VIN_ON and VIN_OFF during the power conversion.

MPS Proprietary Information. Patent Protected. Unauthorized Photocopy and Duplication Prohibited.
© 2020 MPS. All Rights Reserved.

Command	VIN_ON															
Format	Direct															
Bit	15	14	13	12	11	10	9	8	7	6	5	4	3	2	1	0
Access	R	R	R	R	R/W	R/W	R/W	R/W	R/W	R/W	R/W	R/W	R/W	R/W	R/W	R/W
Function	X	X	X	X												
Default value	0	0	0	0	0	0	0	0	0	0	1	0	0	0	0	0

The value is unsigned, and 1LSB = 250mV. The default value is 8V, which is 0x0020.

VIN_OFF (36h)

The VIN_OFF command sets the value of the input voltage (in V), at which the converter should stop power conversion once operation has started. The VIN_OFF value can be set between 2.75V and 14.75V with a 0.25V increment. The VIN_OFF value should be always set lower than the VIN_ON value, with enough margin so that there is no bouncing between VIN_OFF and VIN_ON during the power conversion.

Command	VIN_OFF															
Format	Direct															
Bit	15	14	13	12	11	10	9	8	7	6	5	4	3	2	1	0
Access	R	R	R	R	R/W	R/W	R/W	R/W	R/W	R/W	R/W	R/W	R/W	R/W	R/W	R/W
Function	X	X	X	X												
Default value	0	0	0	0	0	0	0	0	0	0	0	1	0	1	0	0

The value is unsigned, and 1LSB = 250mV. The default value is 5V, which is 0x0014.

IOUT_OC_FAULT_LIMIT (46h)

The IOUT_OC_FAULT_LIMIT sets the output DC current limit. In multi-phase configuration, this command sets the total output DC current limit. If the sensed output DC current is higher than the limit, the MPQ8645P responds with either a latch-off or a hiccup, based on the setting in MFR_OT_OC_SET. Meanwhile, the OC fault flags are set in STATUS_BYTE (78h) and STATUS_WORD (79h) respectively, and the ALT# signal is asserted.

Command	IOUT_OC_FAULT_LIMIT															
Format	Direct															
Bit	15	14	13	12	11	10	9	8	7	6	5	4	3	2	1	0
Access	R	R	R	R	R/W	R/W	R/W	R/W	R/W	R/W	R/W	R/W	R/W	R/W	R/W	R/W
Function	X				242mA/LSB											
Default value	0	0	0	0	0	0	0	0	1	0	1	0	0	0	0	1

The value is unsigned, and 1LSB = 242mA. The default value is 00A1h. The corresponding value of the total output current is 39A.

IOUT_OC_WARN_LIMIT (4Ah)

The IOUT_OC_WARN_LIMIT command configures or reads the threshold for the over-current warning detection. If the sensed current exceeds this value, the OC warning flags are set in STATUS_BYTE (78h) and STATUS_WORD (79h) respectively, and the ALT# signal is asserted.

Command	IOUT_OC_WARN_LIMIT															
Format	Direct															
Bit	15	14	13	12	11	10	9	8	7	6	5	4	3	2	1	0
Access	R	R	R	R	R/W	R/W	R/W	R/W	R/W	R/W	R/W	R/W	R/W	R/W	R/W	R/W
Function	X				242mA/LSB											
Default value	0	0	0	0	0	0	0	0	1	0	0	1	0	0	0	1

The value is unsigned, and 1LSB = 242mA. The default value is 0091h. The corresponding value of the total output current is 35A.

MPS Proprietary Information. Patent Protected. Unauthorized Photocopy and Duplication Prohibited.
© 2020 MPS. All Rights Reserved.

OT_FAULT_LIMIT (4Fh)

The OT_FAULT_LIMIT configures or reads the threshold for the over-temperature fault detection. If the measured temperature exceeds this value, an over-temperature fault is triggered, OT fault flags are set in the STATUS BYTE (78h) and STATUS_WORD (79h) respectively, and the ALT# signal is asserted. After the measured temperature falls below the value in this register, the MOSFET may be switched back on with the OPERATION command when the part works in latch-off mode. The minimum temperature fault detection time should be less than 20ms. The temperature ranges from 0°C to 255°C.

If an OT fault occurs when the temperature rises above this register value, the part implements auto-retry when the temperature drops 20°C below this value.

Command	OT_FAULT_LIMIT															
Format	Direct															
Bit	15	14	13	12	11	10	9	8	7	6	5	4	3	2	1	0
Access	R	R	R	R	R	R	R	R	R/W	R/W	R/W	R/W	R/W	R/W	R/W	R/W
Function	X				1°C/LSB											
Default value	0	0	0	0	0	0	0	0	1	0	0	1	1	0	1	1

The value is unsigned, and 1LSB = 1°C. The default value is 009Bh. The corresponding value is 155°C.

The OT_FAULT_LIMIT setting value should be below 160°C. If the OT_FAULT_LIMIT value is above 160ºC, the register value is neglected, and the MPQ8645P enters thermal shutdown when the junction temperature reaches 160°C.

Table 5 shows the relationship between direct values and real-world values.

Table 5: Direct Value vs. Real-World Value

Direct Value	Real-World Value (°C)
0000 0000	0
0000 0001	1
1111 1111	+255

OT_WARN_LIMIT (51h)

OT_WARN_LIMIT configures or reads the threshold for over-temperature warning detection. If the sensed temperature exceeds this value, an over-temperature warning is triggered, the OT warning flags are set in STATUS BYTE (78h) and STATUS_WORD (79h), and the ALT# signal is asserted. The minimum temperature warning detection time should be less than 20ms.

Command	OT_WARN_LIMIT															
Format	Direct															
Bit	15	14	13	12	11	10	9	8	7	6	5	4	3	2	1	0
Access	R	R	R	R	R	R	R	R	R/W	R/W	R/W	R/W	R/W	R/W	R/W	R/W
Function	X				1°C/LSB											
Default value	0	0	0	0	0	0	0	0	1	0	0	1	0	0	0	1

The value is unsigned, and 1LSB = 1°C. The default value is 0x0091h. The corresponding value is 145°C. The OT_WARN_LIMIT setting value should be below 160°C. The relationship between the direct value and real-world value is the same as OT_FAULT_LIMIT.

VIN_OV_FAULT_LIMIT (55h)

The VIN_OV_FAULT_LIMIT command configures or reads the threshold for the input over-voltage fault detection. If the measured value of VIN rises above the value in this register, VIN OV fault flags are set in the respective registers. The MPQ8645P disables the power stage. When VIN drops below the VIN_OV_FAULT_LIMIT, the MPQ8645P begins working again.

MPS Proprietary Information. Patent Protected. Unauthorized Photocopy and Duplication Prohibited.
© 2020 MPS. All Rights Reserved.

Command	VIN_OV_FAULT_LIMIT															
Format	Direct															
Bit	15	14	13	12	11	10	9	8	7	6	5	4	3	2	1	0
Access	R	R	R	R	R/W	R/W	R/W	R/W	R/W	R/W	R/W	R/W	R/W	R/W	R/W	R/W
Function	X				500mV/LSB											
Default value	0	0	0	0	0	0	0	0	0	0	1	0	0	0	0	1

The value is unsigned and 1LSB = 500mV. The default value is 21h. The corresponding value is 16.5V. The VIN_OV_FAULT_LIMIT setting value should not be greater than 18V.

VIN_OV_WARN_LIMIT (57h)

The VIN_OV_WARN_LIMIT command configures or reads the threshold for the input over-voltage warning detection. If the measured value of V_{IN} rises above the value in this register, V_{IN} OV warning flags are set in the respective registers, and the ALT# signal is asserted.

Command	**VIN_OV_WARN_LIMIT**															
Format	**Direct**															
Bit	15	14	13	12	11	10	9	8	7	6	5	4	3	2	1	0
Access	R	R	R	R	R/W	R/W	R/W	R/W	R/W	R/W	R/W	R/W	R/W	R/W	R/W	R/W
Function	X				500mV/LSB											
Default value	0	0	0	0	0	0	0	0	0	0	1	0	0	0	0	1

The value is unsigned and 1LSB = 500mV. The default value is 0x21. The corresponding value is 16.5V. The VIN_OV_WARN_LIMIT setting value should not be greater than 18V.

VIN_UV_WARN_LIMIT (58h)

The VIN_UV_WARN_LIMIT command configures or reads the threshold for the input under-voltage fault detection. If the measured value of VIN falls below the value in this register, the V_{IN} UV warning flags are set in the respective registers, and the ALT# signal is asserted.

Command	VIN_UV_WARN_LIMIT															
Format	Direct															
Bit	15	14	13	12	11	10	9	8	7	6	5	4	3	2	1	0
Access	R	R	R	R	R/W	R/W	R/W	R/W	R/W	R/W	R/W	R/W	R/W	R/W	R/W	R/W
Function	X				250mV/LSB											
Default value	0	0	0	0	0	0	0	0	0	0	0	1	0	0	0	0

The value is unsigned and 1LSB = 250mV. The default value is 0x10. The corresponding value is 4V. The VIN_UV_WARN_LIMIT setting value should be greater than 3.3V.

TON_DELAY (60h)

The TON_DELAY command sets the time (in ms), from when a start condition is received (as programmed by the ON_OFF_CONFIG command) until the output voltage starts to rise.

Command	TON_DELAY															
Format	Direct															
Bit	15	14	13	12	11	10	9	8	7	6	5	4	3	2	1	0
Access	R	R	R	R	R	R/W	R/W	R/W	R/W	R/W	R/W	R/W	R/W	R/W	R/W	R/W
Function	X	X	X	X	X	4ms/LSB										
Default value	0	0	0	0	0	0	0	0	0	0	0	0	0	0	0	0

The value is unsigned and 1LSB = 4ms. The maximum value is 60h = 0x0100 (1024ms). The default value is 0ms.

TON_RISE (61h)

The TON_RISE command sets the soft-start time (in ms) from when the output starts to rise until the voltage has reached the regulation point.

MPS Proprietary Information. Patent Protected. Unauthorized Photocopy and Duplication Prohibited.
© 2020 MPS. All Rights Reserved.

Command	TON_RISE															
Format	Direct															
Bit	15	14	13	12	11	10	9	8	7	6	5	4	3	2	1	0
Access	R	R	R	R	R/W	R/W	R/W	R/W	R/W	R/W	R/W	R/W	R/W	R/W	R/W	R/W
Function	X	X	X	X	X	1ms/LSB										
Default value	0	0	0	0	0	0	0	0	0	0	0	0	0	0	0	1

The only supported values are:

- 3'b000: 1ms
- 3'b001: 2ms
- 3'b010: 4ms
- 3'b011: 8ms
- 3'b100 and up: 16ms

The default value is 0x01 (e.g. 2ms for soft-start time).

STATUS_BYTE (78h)

The STATUS_BYTE command returns the value of a number of flags indicating the state of the MPQ8645P. Accesses to this command should be used according to the read byte protocol. To clear bits in this register, the underlying fault should be removed and a CLEAR_FAULTS command issued.

Bits	Name	Behavior	Default	Description
[7]	Reserved		0	Always read as 0.
[6]	OFF	Live	0	0: Part enabled 1: Part disabled. This can be from OC fault, OT fault, bad MOSFET fault, UV/OV fault, or the OPERATION command turning off
[5]	VOUT_OV		0	An output over-voltage fault has occurred.
[4]	IOUT_OC_FAULT	Latched	0	0: No over-current fault detected 1: Over-current fault detected
[3]	VIN_UV		0	Not supported, always read as 0.
[2]	OT_FAULT_WARN	Live	0	0: No over-temperature warning or fault detected 1: Over-temperature warning or fault detected
[1]	COMM_ERROR	Latched	0	0: No communication error detected 1: Communication error detected
[0]	NONE_OF_THE_ABOVE	Live	0	0: No other fault or warning 1: Fault or warning not listed in bit[7:1] has occurred

STATUS_WORD (79h)

The STATUS_WORD returns the value of a number of flags indicating the state of the MPQ8645P. To clear bits in this register, the underlying fault should be removed and a CLEAR_FAULTS command issued.

Bits	Name	Behavior	Default	Description
[15]	VOUT_STATUS	Live	0	0: No output fault or warning 1: Output fault or warning
[14]	IOUT_STATUS	Live	0	0: No I_{OUT} fault 1: I_{OUT} fault
[13]	VIN_STATUS	Live	0	0: No V_{IN} fault 1: V_{IN} fault, at the period when V_{IN} starts up, the initial flag is 1 before V_{IN} passes the UVLO threshold. The flag is cleared once V_{IN} passes the UVLO threshold
[12]	MFR_STATUS		0	Always read as 0.
[11]	POWER_GOOD#	Live	0	0: Power good signal is asserted 1: Power good signal is not asserted
[10]	Reserved		0	Always read as 0.
[9]	Reserved		0	Always read as 0.

MPS Proprietary Information. Patent Protected. Unauthorized Photocopy and Duplication Prohibited.
© 2020 MPS. All Rights Reserved.

[8]	UNKNOWN	Latched	0	0: No other fault has occurred 1: A fault type not specified in the bit[15:1] of STATUS_ WORD has been detected
Low Byte	STATUS_BYTE			STATUS_BYTE is the low byte of STATUS_WORD.

STATUS_VOUT (7Ah)

STATUS_VOUT command returns one data byte (see contents below).

Bits	Name	Behavior	Default	Description
[7]	VOUT_OV_FAULT	Live	0	0: No output OV fault 1: Output OV fault
[6]	Reserved	Latched	0	Always read as 0.
[5]	Reserved	Latched	0	Always read as 0.
[4]	VOUT_UV_FAULT	Live	0	0: No output UV fault 1: Output UV fault
[3]	VOUT_MAX_MIN	Live	0	0: No VOUT_MAX, VOUT_MIN warning 1: An attempt has been made to set the output voltage to a value higher than allowed via the VOUT_MAX command, or lower than the limit allowed via the VOUT_MIN command
[2]	Reserved		0	Always read as 0.
[1]	Reserved		0	Always read as 0.
[0]	UNKNOWN	Latched	0	0: No other fault has occurred 1: A fault type not specified in bit[15:1] of STATUS_ WORD has been detected

STATUS_IOUT (7Bh)

Command	STATUS_IOUT							
Format	Unsigned binary							
Bit	7	6	5	4	3	2	1	0
Access	R	R	R	R	R	R	R	R
Function	IOUT_OC	IOUT_OC & VOUT_UV	IOUT_OC_WARNING	X	X	X	X	X
Default value	0	0	0	0	0	0	0	0

STATUS_INPUT (7Ch)

The STATUS_INPUT returns the value of the flags indicating the input voltage status of the MPQ8645P. To clear bits in this register, the underlying fault or warning should be removed and a CLEAR_FAULTS command issued.

Bits	Name	Behavior	Default Set	Description
[7]	VIN_OV_FAULT	R, latched	0	0: No over-voltage fault detected in Vin pin 1: Over-voltage fault detected in Vin pin
[6]	VIN_OV_WARN	R, latched	0	0: Over-voltage condition on V_{IN} has not occurred 1: Over-voltage condition on V_{IN} has occurred
[5]	VIN_UV_WARN	R, latched	0	0: Under-voltage condition on V_{IN} has not occurred 1: Under-voltage condition on V_{IN} has occurred
[4]	VIN_UV_FAULT	R, latched	0	0: Input voltage is higher than the voltage setting in VIN_ON. 1: Input voltage is lower than the voltage setting in VIN_ON.
[3:0]	Reserved	R	0	Always read as 0000.

STATUS_TEMPERATURE (7Dh)

The STATUS_TEMPERATURE returns the value of the flags indicating the V_{IN} over-voltage or under-voltage of the MPQ8645P. To clear bits in this register, the underlying fault should be removed and a CLEAR_FAULTS command issued.

Bits	Name	Behavior	Default	Description
[7]	OT_FAULT	R, latched	0	1: Over-temperature fault has occurred
[6]	OT_WARNING	R, latched	0	1: Over-temperature warning has occurred

MPS Proprietary Information. Patent Protected. Unauthorized Photocopy and Duplication Prohibited.
© 2020 MPS. All Rights Reserved.

[5:0]	Reserved	R	0	Always read as 0.

STATUS_CML (7Eh)

Command	STATUS_CML							
Format	Unsigned binary							
Bit	7	6	5	4	3	2	1	0
Access	R	R	R	R	R	R	R	R
Function	Invalid / unsupported command	Invalid / unsupported data	X	Memory fault detected	X	X	Other fault	Memory busy
Default value	0	0	0	0	0	0	0	0

READ_VIN (88h)

The READ_VIN command returns the 10-bit measured value of the input voltage.

Command	READ_VOUT															
Format	Direct															
Bit	15	14	13	12	11	10	9	8	7	6	5	4	3	2	1	0
Access	R	R	R	R	R	R	R	R	R	R	R	R	R	R	R	R
Function	X						25mV/LSB									
Default value	0	0	0	0	0	0	0	0	0	0	0	0	0	0	0	0

READ_VOUT (8Bh)

The READ_VOUT command returns the 13-bit measured value of the output voltage.

Command	**READ_VOUT**															
Format	Direct															
Bit	15	14	13	12	11	10	9	8	7	6	5	4	3	2	1	0
Access	R	R	R	R	R	R	R	R	R	R	R	R	R	R	R	R
Function	X			1.25mV/LSB												
Default value	0	0	0	0	0	0	0	0	0	0	0	0	0	0	0	0

READ_IOUT (8Ch)

The READ_IOUT command returns the 14-bit measured value of the output current. This value is also compared with IOUT_OC_FAULT_LIMIT and IOUT_OC_WARN_LIMIT, and can affect STATUS_IOUT.

Command	READ_IOUT															
Format	Direct															
Bit	15	14	13	12	11	10	9	8	7	6	5	4	3	2	1	0
Access	R	R	R	R	R	R	R	R	R	R	R	R	R	R	R	R
Function	X		62.5mA/LSB													
Default value	0	0	0	0	0	0	1	0	0	1	0	1	1	0	0	0

READ_TEMPERATURE_1 (8Dh)

The READ_TEMPERATURE_1 command returns the internal sensed temperature. This value is also used internally for over-temperature fault and warning detection. This data has a range of -255°C to +255°C.

Command	READ_TEMPERATURE_1															
Format	Direct															
Bit	15	14	13	12	11	10	9	8	7	6	5	4	3	2	1	0
Access	R	R	R	R	R	R	R/W	R/W	R/W	R/W	R/W	R/W	R/W	R/W	R/W	R/W
Function	X						Sign	1°C/LSB								
Default value	0	0	0	0	0	0	0	0	0	0	1	1	0	0	1	0

READ_TEMPERATURE_1 is a 2-byte, two's complement integer. Bit[9] is the sign bit. Table 6 shows the relationship between direct values and real-world values.

MPS Proprietary Information. Patent Protected. Unauthorized Photocopy and Duplication Prohibited.
© 2020 MPS. All Rights Reserved.

Table 6: Direct Value vs. Real-World Value

Sign	Direct Value	Real-World Value (°C)
0	0 0000 0000	0
0	0 0000 0001	1
0	1 1111 1111	+511
1	0 0000 0001	-511
1	1 1111 1111	-1

PMBUS_REVISION (98h)

The PMBUS_REVISION command returns the protocol revision used. Accesses to this command should use the read byte protocol. Bit[7:4] indicates the PMBus revision of specification Part I to which the device is compliant. Bit[3:0] indicates the revision of specification Part II to which the device is compliant.

Name	PMBUS_REVISION							
Format	Unsigned binary							
Bit	7	6	5	4	3	2	1	0
Access	R	R	R	R	R	R	R	R
Default value	0	0	1	0	0	0	1	0

Bit[7:4] is always read as 4’b0011, specification PMBus Part I Revision 1.3.

Bit[3:0] is always read as 4’b0011, specification PMBus Part II Revision 1.3.

MFR_ID (99h)

The MFR_ID command returns the company identification.

Byte	Byte Name	Value	Description
0	Byte Count	0x03	Always read as 0x03. The number of data bytes that the block read command expects to read.
1	Character 1	0x4D, ASCII of “M”	Always read as 0x4D.
2	Character 2	0x50, ASCII of “P”	Always read as 0x50.
3	Character 3	0x53, ASCII of “S”	Always read as 0x53.

MFR_MODEL (9Ah)

The MFR_MODEL command returns the part name.

Byte	Byte Name	Value	Description
0	Byte Count	0x08	Always read as 0x08, the number of data bytes that the block read command expects to read.
1	Character 1	0x4D, ASCII of “M”	Always read as 0x4D.
2	Character 2	0x50, ASCII of “P”	Always read as 0x50.
3	Character 3	0x51, ASCII of “Q”	Always read as 0x51.
4	Character 4	0x38, ASCII of “8”	Always read as 0x38.
5	Character 5	0x36, ASCII of “6”	Always read as 0x36.
6	Character 6	0x34, ASCII of “4”	Always read as 0x34.
5	Character 5	0x35, ASCII of “5”	Always read as 0x35.
6	Character 6	0x50, ASCII of “P”	Always read as 0x50.

MPS Proprietary Information. Patent Protected. Unauthorized Photocopy and Duplication Prohibited.
© 2020 MPS. All Rights Reserved.

MFR_4_DIGIT (9Dh)

The MFR_4_DIGIT sets a unique four-digit number to identify different MTP configurations. The MFR_4_DIGIT has a total of 6 bytes.

Byte	Byte Name	Value
0	Character 0	0x31
1	Character 1	0x36~0x39
2	Character 2	0x30, 0x31
3	Character 3	0x30~0x3F
4	Character 4	0x30~0x33
5	Character 5	0x30~0x3F

The default four-digit number for the MPQ8645P is -0000, which corresponds to 0x313630303030 (byte 0~5).

MFR_CTRL_COMP (D0h)

The MFR_CTRL_COMP command adjusts the loop compensation of the MPQ8645P.

Bits	Name	Access	Behavior	Default	Description
[7:5]	Reserved	R/W	Live	0000	
[4]	Cff	R/W	Live	0	Sets the feed-forward capacitance when the internal feedback resistor divider is selected. 0: 20pF 1: 50pF
[3:1]	RAMP	R/W	Live	1101	Sets The internal RAMP compensation to stabilize the loop. NOTE: the actual RAMP amplitude is related to EAh[3]. See the register EAh description for details. EAh[3]=0 (single-phase) / EAh[3]=1 (multi-phase) 000: 5.6mV ramp / 000: 8.6mV ramp 001: 9.8mV ramp / 001: 15mV ramp 010: 18mV ramp / 010: 27mV ramp 011: 30mV ramp / 011: 45mV ramp 100: 8.5mV ramp / 100: 13mV ramp 101: 15.1mV ramp / 101: 23mV ramp 110: 27mV ramp / 110: 41mV ramp 111: 44mV ramp / 111: 68mV ramp
[0]	Slave Fault Detection	R/W	Live	1	Enables or disables the slave fault detection function through the PG pin. 0: Slave-phase fault detection is enabled 1: Slave-phase fault detection is disabled

MFR_CTRL_VOUT (D1h)

The MFR_CTRL_VOUT command adjusts the output voltage behaviors of the MPQ8645P.

Bits	Name	Access	Behavior	Default	Description
[7]	Reserved	R/W	Live	0	
[6]	V_O discharge	R/W	Live	1	Enables or disables the active output voltage discharge when the MPQ8645P is commanded off through CTRL or the OPERATION command. 1: Output voltage discharge at CTRL low 0: No active output voltage discharge
[5:2]	PG delay	R/W	Live	0000	Sets the PG pull-high time after soft start finishes. 1111: 1ms 0000: 2ms 0001: 3ms … 1110: 15ms

MPS Proprietary Information. Patent Protected. Unauthorized Photocopy and Duplication Prohibited.
© 2020 MPS. All Rights Reserved.

[1:0]	VO_RANGE	R/W	Live	00	Chooses the internal voltage divider ratio. 00: V_{REF} / V_O = 1V, V_O = 0.4V to 0.672V, LSB = 2mV 01: V_{REF} / V_O = 0.5V, V_O = 0.4V to 1.344V, LSB = 2mV 10: V_{REF} / V_O = 0.25V, V_O = 0.7V to 2.688V, LSB = 2mV 11: V_{REF} / V_O = 0.125V, V_O = 1.3V to 5.376V, LSB = 2mV

The default value of D1h is 0x40.

MFR_CTRL_OPS (D2h)

The MFR_CTRL_OPS command sets the switching frequency and light-load operation mode of the MPQ8645P.

Bits	Name	Access	Behavior	Default	Description
[7:3]	Reserved			00000	
[2:1]	SWITCHING_ FREQUENCY	R/W	Live	10	00: Set f_{SW} to 400kHz 01: Set f_{SW} to 600kHz 10: Set f_{SW} to 800kHz 11: Set f_{SW} to 1000kHz
[0]	SKIP_CCM (SYNC)	R/W	Live	1	0: Pulse-skip mode at light-load 1: Forced CCM at light-load

The default value of D2h is 0x05.

MFR_ADDR_PMBUS (D3h)

Command	MFR_ADDR_PMBUS							
Format	Direct							
Bit	7	6	5	4	3	2	1	0
Access	R/W	R/W	R/W	R/W	R/W	R/W	R/W	R/W
Function	Enable	ADDR						
Default value	0	0	0	0	0	0	0	0

Bit[7] (enable bit):

1: The address is decided by MFR_ADDR_PMBUS [6:0]
0: The address is decided by ADDR pin

The default value of D3h is 0x00.

MFR_VOUT_OVP_FAULT_LIMIT (D4h)

This MFR_VOUT_OVP_FAULT_LIMIT command sets the exit and entry thresholds for OVP.

Bits	Name	Access	Behavior	Default	Description
[7:4]	Reserved			0000	
[3:2]	OV_EXIT_ TH	R/W	Live	00	Sets the OVP exit threshold. 00: 10% * V_{REF} 01: 50% * V_{REF} 10: 80% * V_{REF} 11: 102.5% * V_{REF}
[1:0]	OV_ENTRY_ TH	R/W	Live	00	Sets the OVP entry threshold. 00: 115% * V_{REF} 01: 120% * V_{REF} 10: 125% * V_{REF} 11: 130% * V_{REF}

The above thresholds are relative values of the reference voltage. The default value of D4h is 0x00.

MPS Proprietary Information. Patent Protected. Unauthorized Photocopy and Duplication Prohibited.
© 2020 MPS. All Rights Reserved.

MFR_OVP_NOCP_SET (D5h)

This MFR_OVP_NOCP_SET command sets the responses of the output voltage OVP.

Bits	Name	Access	Behavior	Default	Description
[7:4]	Reserved			0000	
[3]	DELAY_NOCP (D400)	R/W	Live	0	0: 100ns delay after NOCP 1: 200ns delay after NOCP
[2]	NOCP	R/W	Live	0	0: Set NOCP to -10A 1: Set NOCP to -15A
[1:0]	VOUT_OV _Response	R/W	Live	00	00: Latch-off with output voltage discharge 01: Latch-off without output voltage discharge in DCM 10: Hiccup with output voltage discharge 11: Hiccup without output voltage discharge in DCM

The bit[1:0] of MFR_OVP_NOCP_SET command tells the converter what action to take in response to an output over-voltage fault. The device also:

- Sets the VOUT_OV bit in the STATUS_BYTE.
- Sets the VOUT bit in the STATUS_WORD.
- Sets the VOUT over-voltage fault bit in the STATUS_VOUT command.
- Notifies the host by asserting ALERT pin.

There are four OVP response modes that can be chosen through bit[1:0] of MFR_VOUT_OVP_ NOCP_SET:

- Latch-off with output discharge: Once the MPQ8645P reaches the OV entry threshold, the LS-FET turns on until the MPQ8645P reaches NOCP. The MPQ8645P turns off for a fixed amount of time and turns on again. This operation repeats until FB drops below the OVP exit threshold set by register D4[3:2]. Then the LS-FET turns off. If FB rises beyond the OV entry threshold again, the LS-FET turns on again to discharge the output voltage. However, the converter will not attempt to restart until the power of either VIN, VCC, or CTRL is recycled.
- Latch-off without output discharge (only effective in DCM): Once the MPQ8645P reaches the OV entry threshold, the LS-FET turns on. When the inductor current crosses zero, the converter enters Hi-Z mode (output disabled). The converter stops discharging the output voltage. The converter will not attempt to restart until the power of either VIN, VCC, or CTRL is recycled.
- Hiccup with output discharge: Once the MPQ8645P reaches the OV entry threshold, the LS-FET is on until the MPQ8645P reaches NOCP. The MPQ8645P turns off for a fixed amount of time and turns on again. This operation repeats until FB drops below the OVP exit threshold set by register D4[3:2]. Then the LS-FET turns off. A new SS is initiated.
- Hiccup without output discharge (only effective in DCM): Once the MPQ8645P reaches OV, the LS-FET remains on until the MPQ8645P reaches NOCP. Then a new SS is initiated.

The default value of D5h is 0x00.

MFR_OT_OC_SET (D6h)

The MFR_OT_OC_SET command sets the responses of OCP and sets the responses and hysteresis of OTP. This is a 1-byte command.

MPS Proprietary Information. Patent Protected. Unauthorized Photocopy and Duplication Prohibited.
© 2020 MPS. All Rights Reserved.

Bits	Name	Access	Behavior	Default	Description
[7:4]	Reserved			0000	
[3]	OC_response	R/W	Live	00	0: Latch-off, never retry 1: Retry
[2:1]	OT_hyst	R/W	Live	00	00: 20°C 01: 25°C 10: 30°C 11: 35°C
[0]	OT_Response	R/W	Live	0	0: Latch-off, never retry 1: Retry after the temp drops by the value set by bit[2:1]

The MFR_OT_OC_SET command tells the converter what kind of action to take in response to an over-temperature fault and a total output over-current fault.

The default value of D6h is 0x00.

MFR_OC_PHASE_SET (D7h)

The MFR_OC_PHASE_SET command sets the inductor valley current limit of each individual phase. This is a cycle-by-cycle current limit. After 31 consecutive cycles of OC, OCP is triggered. This is a 1-byte command.

Bits	Name	Access	Behavior	Default	Description
[7:5]	Reserved			000	
[4:0]	OC_limit	R/W	Live	10100	Current limit. 1.5A/LSB, [00000] = 0A.

The value is unsigned, and 1LSB = 1.5A. The default value of D7h is 0x14, which corresponds to 30A of the inductor valley current limit.

MFR_HICCUP_ITV_SET (D8h)

This MFR_HICCUP_ITV_SET command sets the interval of hiccup during OCP. This is a 1-byte command.

Bits	Name	Access	Behavior	Default	Description
[7:6]	Reserved			00	
[5:0]	Hiccup_itv	R/W	Live	000000	OC fault hiccup interval time. 000000: 4ms 1 LSB = 4ms.

The D8h is only effective when EAh bit[10] is set to 1, and reaches the total output current limit set by IOUT_OC_FAULT_LIMIT (46h).

When EAh bit[10] is set to “0” or when it reaches the inductor valley current limit set by MFR_OC_PHASE_LIMIT, the OCP hiccup time is about five times the soft-start time set by TON_RISE (61h).

The default value of D8h is 0x00.

MFR_UVP_PGOOD_ON_LIMIT (D9h)

This MFR_UVP_PGOOD_ON_LIMIT command sets the thresholds UVP and PGOOD on. Any fault condition will pull PG low. The default value of D9h is 0x00.

Bits	Name	Access	Behavior	Default	Description
[7:4]	Reserved			0000	
[3:2]	UV_TH	R/W	Live	00	Sets the UVP threshold. When FB drops below the UV_TH level, the MPQ8645P enters UVP. The response of UVP is the same as in OCP. 00: 69% * V_{REF} 01: 74% * V_{REF} 10: 79% * V_{REF} 11: 84% * V_{REF}

MPS Proprietary Information. Patent Protected. Unauthorized Photocopy and Duplication Prohibited.
© 2020 MPS. All Rights Reserved.

[1:0]	PG_ON	R/W	Live	00	Sets the threshold of FB at which PG is pulled high during soft start. Once FB reaches the threshold, PG is pulled high after the delay set by D1[5:2]. 00: 90% * V_{REF} 01: 92.5% * V_{REF} 10: 95% * V_{REF} 11: 97.5% * V_{REF}

MFR_VOUT _STEP (DAh)

This MFR_VOUT_STEP command sets the slew rate of the output voltage transition after soft start finishes. This command does not determine the slew rate of the output voltage during soft start.

Bits	Name	Access	Behavior	Default	Description
[7:4]	Reserved			0000	
[3:0]	Vout_step	R/W	Live	0000	0000: 10μs/mV 1LSB = 2.5μs/mV.

The default value of DAh is 0x00.

MFR_LOW_POWER (E5h)

This MFR_LOW_POWER enables or disables the slave phase(s) in multi-phase configuration.

Bits	Name	Access	Behavior	Default	Description
[7:2]	Reserved			000000	
[1]	LP_PS#	R/W	Live	0	0: Low-power mode is disabled, regardless of PS# 1: Low-power mode is enabled when PS# is low, and disabled when PS# is high
[0]	LP_PMBus	R/W	Live	0	0: Low-power mode is disabled through PMBus 1: Low-power mode is enabled through PMBus

The slave phases can be enabled/disabled directly through bit[0] of MFR_LOW_POWER command. When bit[1] of MFR_LOW_POWER is set to “1”, the slave phases can be enabled or disabled by the PS# pin. The master phase cannot be disabled through the MFR_LOW_POWER command. The default value of E5h is 0x00.

MFR_CTRL (EAh)

Some bits of MFR_CTRL enable or disable some functions.

Bits	Name	Access	Behavior	Default	Description
[15:11]	Reserved	R	Live		For manufacturer use only.
[10]	total_oc_ hiccup_interval	R/W	Live	0	Chooses whether the interval during OCP HICCUP can be changed through register D8h. 0: Fixed OCP hiccup interval 1: Adjustable OCP hiccup interval
[9]	osm	R/W	Live	0	Enables or disables the output sink mode (OSM) function. 0: Enable output sink mode (OSM) 1: Disable OSM
[8:4]	reserved	R	Live		For manufacturer use only.
[3]	phase_operation	R/W	Live		Determines single- or multi-phase operation. The selection of this bit affects the actual ramp amplitude chosen through register D0h[3:1]. See the MFR_CTRL_COMP (D0h) section on page 44. 0: For single-phase operation 1: For multi-phase operation
[2:0]	reserved	R	Live		For manufacturer use only.

MPS Proprietary Information. Patent Protected. Unauthorized Photocopy and Duplication Prohibited.
© 2020 MPS. All Rights Reserved.

PACKAGE INFORMATION

TQFN-25 (4mmx5mm)

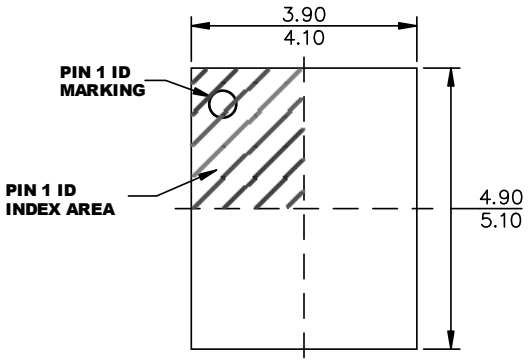

TOP VIEW

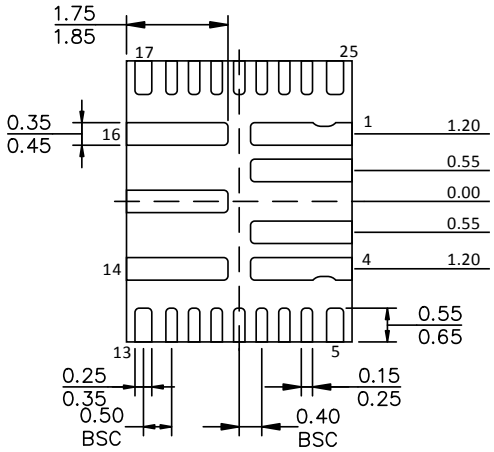

BOTTOM VIEW

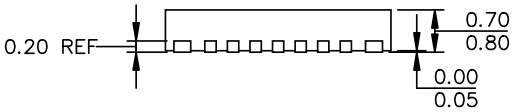

SIDE VIEW

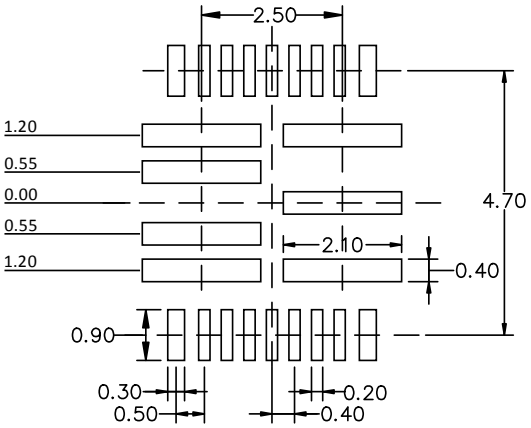

RECOMMENDED LAND PATTERN

NOTE:

1) LAND PATTERNS OF PINS 1~4 AND 14~16 HAVE THE SAME LENGTH AND WIDTH.
2) LAND PATTERNS OF PIN 5, 13, AND 17 AND 25 HAVE THE SAME LENGTH AND WIDTH.
3) ALL DIMENSIONS ARE IN MILLIMETERS.
4) LEAD COPLANARITY SHALL BE 0.08 MILLIMETERS MAX.
5) JEDEC REFERENCE IS MO-220.
6) DRAWING IS NOT TO SCALE.

NOTICE: The information in this document is subject to change without notice. Please contact MPS for current specifications. Users should warrant and guarantee that third-party Intellectual Property rights are not infringed upon when integrating MPS products into any application. MPS will not assume any legal responsibility for any said applications.

MPS Proprietary Information. Patent Protected. Unauthorized Photocopy and Duplication Prohibited.
© 2020 MPS. All Rights Reserved.