Technical Specification

PKU 5000E series DC/DC Converters Input 18 - 72 V, Output up to 10 A / 35 W	EN/LZT 146 391 R5A September 2017 © Flex

Key Features

- Industry standard Sixteenth-brick
  33.02 x 22.86 x 7.50 mm (1.3 x 0.9 x 0.295 in.)
- Wide Input range 18-72 V_{in}
- High efficiency, typ. 91.7 % at 5 V half load & 27 V_{in}
- 1500 V_{dc} input to output isolation
- Surface mount option
- Meets safety requirements according to IEC/EN/UL 60950-1
- MTBF 4.2 million hours

General Characteristics

- Input under voltage protection
- Over temperature protection
- Output over voltage protection
- Output short circuit protection
- Remote control
- Highly automated manufacturing ensures quality
- ISO 9001/14001 certified supplier

Safety Approvals

Design for Environment

Meets requirements in high-temperature lead-free soldering processes.

Contents

General Information 2
Safety Specification 3
Absolute Maximum Ratings 4

Product Program	Ordering No.	
3.3 V/10 A Electrical Specification	PKU 5310E PI	5
5 V/7 A Electrical Specification	PKU 5311E PI	8
12 V/2,75 A Electrical Specification	PKU 5313E PI	11
15 V/2 A Electrical Specification	PKU 5315E PI	14

EMC Specification 17
Operating Information 18
Thermal Consideration 20
Connections 20
Mechanical Information 21
Soldering Information 23
Delivery Package Information 24
Product Qualification Specification 25

© Flex

Ordering Information

Product program	Output
PKU 5310E	3.3 V, 10 A / 33 W
PKU 5311E	5 V, 7 A / 35 W
PKU 5313E	12V, 3A / 33W
PKU 5315E	15V, 2A / 30W

Product number and Packaging

PKU 5XXXE n1n2n3n4				
Options	n1	n2	n3	n4
Mounting	o			
Remote Control logic		o		
Lead length			o	
Delivery package information				o

Options	Description	
n1	PI	Through hole
	SI	Surface mount
n2		Negative *
	P	Positive
n3		5.30 mm *
	LA	3.69 mm
	LB	4.57 mm
n4	/B	Tray
	/C	Tape and Reel (only valid for surface mount products)

Example a through-hole mounted, negative logic, short pin product with tray packaging would be PKU 4315E PILA/B.

* Standard variant (i.e. no option selected).

General Information

Reliability

The failure rate (λ) and mean time between failures (MTBF= 1/λ) is calculated at max output power and an operating ambient temperature (T_A) of +40°C. Flex uses Telcordia SR-332 Issue 2 Method 1 to calculate the mean steady-state failure rate and standard deviation (σ).

Telcordia SR-332 Issue 2 also provides techniques to estimate the upper confidence levels of failure rates based on the mean and standard deviation.

Mean steady-state failure rate, λ	Std. deviation, σ
241 nFailures/h	31.9 nFailures/h

MTBF (mean value) for the PKU-E series = 4.2 Mh.
MTBF at 90% confidence level = 3.6 Mh

Compatibility with RoHS requirements

The products are compatible with the relevant clauses and requirements of the RoHS directive 2002/95/EC and have a maximum concentration value of 0.1% by weight in homogeneous materials for lead, mercury, hexavalent chromium, PBB and PBDE and of 0.01% by weight in homogeneous materials for cadmium.

Exemptions in the RoHS directive utilized in Flex products include:

- Lead in high melting temperature type solder (used to solder the die in semiconductor packages)
- Lead in glass of electronics components and in electronic ceramic parts (e.g. fill material in chip resistors)
- Lead as an alloying element in copper alloy containing up to 4% lead by weight (used in connection pins made of Brass)

Quality Statement

The products are designed and manufactured in an industrial environment where quality systems and methods like ISO 9000, 6σ (sigma), and SPC are intensively in use to boost the continuous improvements strategy. Infant mortality or early failures in the products are screened out and they are subjected to an ATE-based final test. Conservative design rules, design reviews and product qualifications, plus the high competence of an engaged work force, contribute to the high quality of our products.

Warranty

Warranty period and conditions are defined in Flex General Terms and Conditions of Sale.

Limitation of Liability

Flex does not make any other warranties, expressed or implied including any warranty of merchantability or fitness for a particular purpose (including, but not limited to, use in life support applications, where malfunctions of product can cause injury to a person's health or life).

© Flex

Safety Specification

General information

Flex DC/DC converters and DC/DC regulators are designed in accordance with safety standards IEC/EN/UL 60950-1 *Safety of Information Technology Equipment*.

IEC/EN/UL 60950-1 contains requirements to prevent injury or damage due to the following hazards:

- Electrical shock
- Energy hazards
- Fire
- Mechanical and heat hazards
- Radiation hazards
- Chemical hazards

On-board DC/DC converters and DC/DC regulators are defined as component power supplies. As components they cannot fully comply with the provisions of any safety requirements without “Conditions of Acceptability”. Clearance between conductors and between conductive parts of the component power supply and conductors on the board in the final product must meet the applicable safety requirements. Certain conditions of acceptability apply for component power supplies with limited stand-off (see Mechanical Information for further information). It is the responsibility of the installer to ensure that the final product housing these components complies with the requirements of all applicable safety standards and regulations for the final product.

Component power supplies for general use should comply with the requirements in IEC 60950-1, EN 60950-1 and UL 60950-1 *Safety of Information Technology Equipment.* There are other more product related standards, e.g. IEEE 802.3 *CSMA/CD (Ethernet) Access Method*, and ETS-300132-2 *Power supply interface at the input to telecommunications equipment, operated by direct current (dc)*, but all of these standards are based on IEC/EN/UL 60950-1 with regards to safety.

Flex DC/DC converters and DC/DC regulators are UL 60950-1 recognized and certified in accordance with EN 60950-1.

The flammability rating for all construction parts of the products meet requirements for V-0 class material according to IEC 60695-11-10, *Fire hazard testing, test flames* – 50 W horizontal and vertical flame test methods.

The products should be installed in the end-use equipment, in accordance with the requirements of the ultimate application. Normally the output of the DC/DC converter is considered as SELV (Safety Extra Low Voltage) and the input source must be isolated by minimum Double or Reinforced Insulation from the primary circuit (AC mains) in accordance with IEC/EN/UL 60950-1.

Isolated DC/DC converters

It is recommended that a slow blow fuse is to be used at the input of each DC/DC converter. If an input filter is used in the circuit the fuse should be placed in front of the input filter.
In the rare event of a component problem that imposes a short circuit on the input source, this fuse will provide the following functions:

- Isolate the fault from the input power source so as not to affect the operation of other parts of the system.
- Protect the distribution wiring from excessive current and power loss thus preventing hazardous overheating.

The galvanic isolation is verified in an electric strength test. The test voltage (V_{iso}) between input and output is 1500 Vdc or 2250 Vdc (refer to product specification).

24 V DC systems

The input voltage to the DC/DC converter is SELV (Safety Extra Low Voltage) and the output remains SELV under normal and abnormal operating conditions.

48 and 60 V DC systems

If the input voltage to the DC/DC converter is 75 Vdc or less, then the output remains SELV (Safety Extra Low Voltage) under normal and abnormal operating conditions.

Single fault testing in the input power supply circuit should be performed with the DC/DC converter connected to demonstrate that the input voltage does not exceed 75 Vdc.

If the input power source circuit is a DC power system, the source may be treated as a TNV-2 circuit and testing has demonstrated compliance with SELV limits in accordance with IEC/EN/UL60950-1.

© Flex

Absolute Maximum Ratings

Characteristics			min	typ	max	Unit
T_{P1}	Operating Temperature (see Thermal Consideration section)		-40		+105	°C
T_S	Storage temperature		-55		+100	°C
V_I	Input voltage		-0.5		+80	V
V_{iso}	Isolation voltage (input to output test voltage)				1500	Vdc
V_{tr}	Input voltage transient (t_p 100 ms)				100	V
V_{RC}	Remote Control pin voltage (see Operating Information section)	Positive logic option	-0.5		40	V
		Negative logic option	-0.5		40	V
V_{adj}	Adjust pin voltage (see Operating Information section)		-0.5		$2xV_{oi}$	V

Stress in excess of Absolute Maximum Ratings may cause permanent damage. Absolute Maximum Ratings, sometimes referred to as no destruction limits, are normally tested with one parameter at a time exceeding the limits of Output data or Electrical Characteristics. If exposed to stress above these limits, function and performance may degrade in an unspecified manner.

Fundamental Circuit Diagram

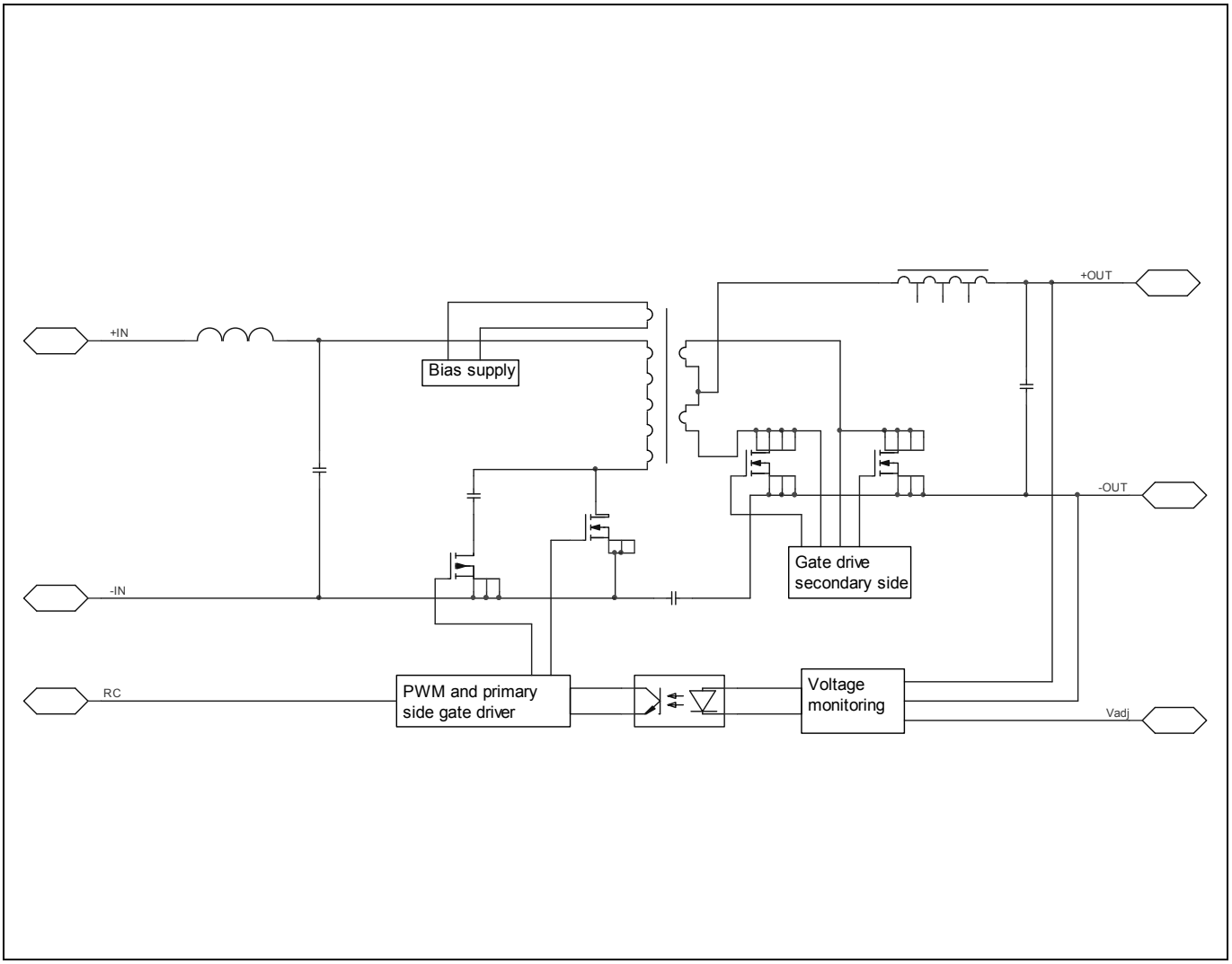

© Flex

3.3 V/10 A Electrical Specification

PKU 5310E PI

T_{P1} = -30 to +90ºC, V_I = 18 to 72 V, unless otherwise specified under Conditions.
Typical values given at: T_{P1} = +25°C, V_I= 53 V_I max I_O, unless otherwise specified under Conditions.
Additional C_O = 220 µF.

Characteristics		Conditions	min	typ	max	Unit
V_I	Input voltage range		18		72	V
V_{Ioff}	Turn-off input voltage	Decreasing input voltage	15	16	17	V
V_{Ion}	Turn-on input voltage	Increasing input voltage	16	17	18	V
C_I	Internal input capacitance			4.4		µF
P_O	Output power	Output voltage initial setting	0		33	W
η	Efficiency	50 % of max I_O, , V_I = 27 V		89.4		%
		max I_O, , V_I = 27 V		89.2		
		50 % of max I_O, V_I = 53 V		87.3		
		max I_O, V_I = 53 V		88.1		
P_d	Power Dissipation	max I_O		4.4	7.5	W
P_{li}	Input idling power	I_O = 0 A, V_I = 53 V		1.8		W
P_{RC}	Input standby power	V_I = 53 V (turned off with RC)		0.65		W
f_s	Switching frequency	0-100 % of max I_O	255	285	315	kHz

V_{Oi}	Output voltage initial setting and accuracy	T_{P1} = +25°C, V_I = 53 V, I_O = 10 A	3.24	3.30	3.36	V
V_O	Output adjust range	See operating information	2.97		3.63	V
	Output voltage tolerance band	10-100 % of max I_O	3.20		3.40	V
	Idling voltage	I_O = 0 A	3.24		3.36	V
	Line regulation	max I_O		±5	±25	mV
	Load regulation	V_I = 53 V, 0-100 % of max I_O		±5	±25	mV
V_{tr}	Load transient voltage deviation	V_I = 53 V, Load step 25-75-25 % of max I_O, di/dt = 5 A/µs C_o = 1mF		±250	±400	mV
t_{tr}	Load transient recovery time			250	400	µs
t_r	Ramp-up time (from 10−90 % of V_{Oi})	10-100 % of max I_O		7		ms
t_s	Start-up time (from V_I connection to 90 % of V_{Oi})			8		ms
t_f	V_I shut-down fall time (from V_I off to 10 % of V_O)	max I_O		2		ms
		I_O = 0 A		15		s
t_{RC}	RC start-up time	max I_O		8		ms
	RC shut-down fall time (from RC off to 10 % of V_O)	max I_O		0.35		ms
		I_O = 0 A		15		s
I_O	Output current		0		10	A
I_{lim}	Current limit threshold	V_I = 53 V, T_{P1} < max T_{P1}		15	20	A
I_{sc}	Short circuit current	T_{P1} = 25ºC, Note 1		18		A
V_{Oac}	Output ripple & noise	See ripple & noise section, max I_O, V_{Oi}, C_o = 220uF		45	80	mVp-p
OVP	Over voltage protection	T_{P1} = +25°C, V_I = 53 V, 0-100 % of max I_O		3.9		V

1) RMS value

3.3 V/10 A Typical Characteristics

PKU 5310E PI

Efficiency

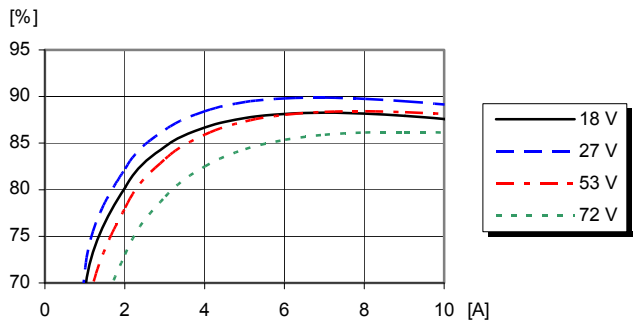

Efficiency vs. load current and input voltage at T_{P1} = +25°C

Power Dissipation

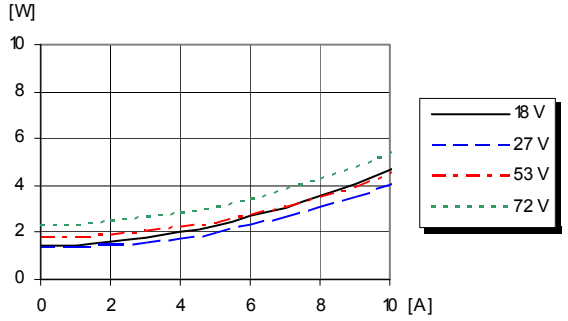

Dissipated power vs. load current and input voltage at T_{P1} = +25°C

Output Characteristics

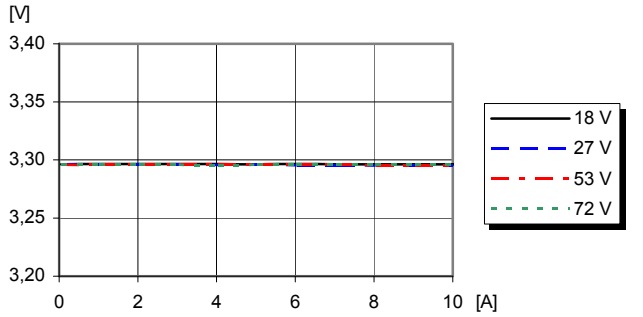

Output voltage vs. load current at T_{P1} = +25°C

Current Limit Characteristics

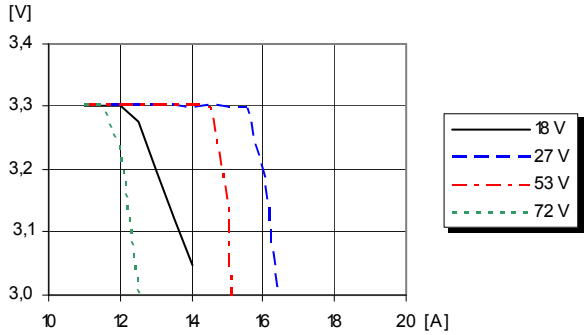

Output voltage vs. load current at I_O > max I_O, T_{P1} = +25°C
The module enters hiccup mode when the output current exceeds current limit.

Output Current Derating

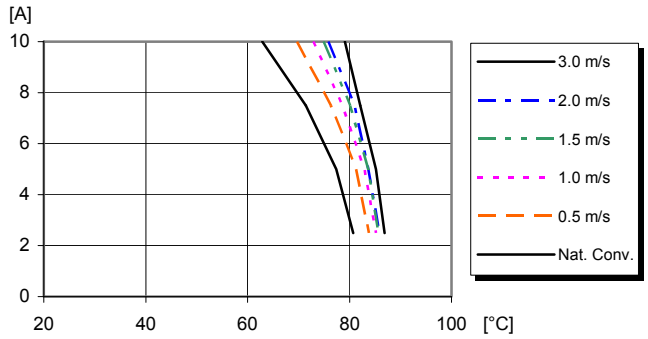

Available load current vs. ambient air temperature and airflow at V_I = 53 V. See Thermal Consideration section.

© Flex

3.3 V/10 A Typical Characteristics

PKU 5310E PI

Start-up

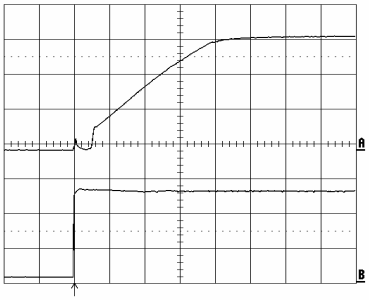

Start-up enabled by connecting V_I at:
T_{P1} = +25°C, V_I = 53 V,
I_O = 10 A resistive load.

Top trace: output voltage (1 V/div.).
Bottom trace: input voltage (20 V/div.).
Time scale: (2 ms/div.).

Shut-down

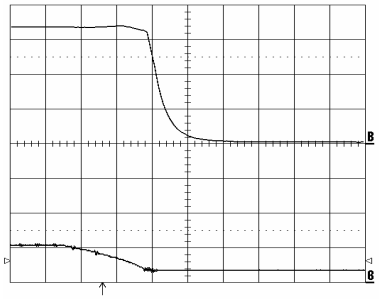

Shut-down enabled by disconnecting V_I at:
T_{P1} = +25°C, V_I = 53 V,
I_O = 10 A resistive load.

Top trace: output voltage (1 V/div.).
Bottom trace: input voltage (50 V/div.).
Time scale: (0.5 ms/div.).

Output Ripple & Noise

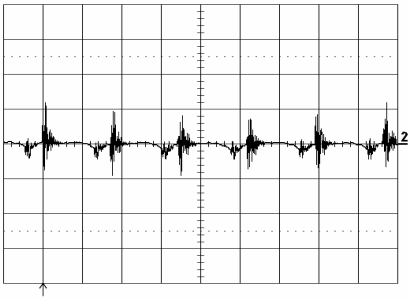

Output voltage ripple at:
T_{P1} = +25°C, V_I = 53 V,
I_O = 10 A resistive load.

Trace: output voltage (20 mV/div.).
Time scale: (2 µs/div.).
Additional C_o =220uF

Output Load Transient Response

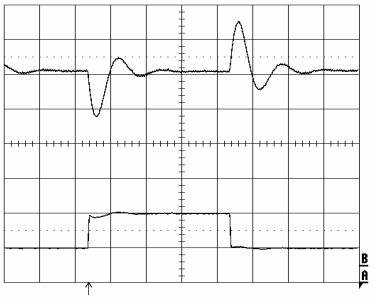

Output voltage response to load current step-change (2.5-7.5-2.5 A) at:
T_{P1} =+25°C, V_I = 53 V, C_o = 1mF

Top trace: output voltage (200 mV/div.).
Bottom trace: load current (5 A/div.).
Time scale: (0.5 ms/div.).

Output Voltage Adjust (see operating information)

Passive adjust
The resistor value for an adjusted output voltage is calculated by using the following equations:

Output Voltage Adjust Upwards, Increase:

$$Radj = \left(\frac{5.11 \times 3.30(100 + \Delta\%)}{1.225 \times \Delta\%} - \frac{511}{\Delta\%} - 10.22 \right) \text{ k}\Omega$$

Example: Increase 4% =>V_{out} = 3.432 Vdc

$$\left(\frac{5.11 \times 3.30(100 + 4)}{1.225 \times 4} - \frac{511}{4} - 10.22 \right) \text{ k}\Omega = 220 \text{ k}\Omega$$

Active adjust
The output voltage may be adjusted using a voltage applied to the Vadj pin. This voltage is calculated by using the following equations:

$$Vadj = \left(1.225 + 2.45 \times \frac{Vdesired - 3.30}{3.30} \right) \text{V}$$

Example: Upwards => 3.50 V

$$\left(1.225 + 2.45 \times \frac{3.50 - 3.30}{3.30} \right) \text{V} = 1.37 \text{ V}$$

© Flex

5 V/7 A Electrical Specification

PKU 5311E PI

T_{P1} = -30 to +90ºC, V_I = 18 to 72 V, unless otherwise specified under Conditions.
Typical values given at: T_{P1} = +25°C, V_I = 53 V_I max I_O, unless otherwise specified under Conditions.
Additional C_o = 150 µF.

Characteristics		Conditions	min	typ	max	Unit
V_I	Input voltage range		18		72	V
V_{Ioff}	Turn-off input voltage	Decreasing input voltage	15	16	17	V
V_{Ion}	Turn-on input voltage	Increasing input voltage	16	17	18	V
C_I	Internal input capacitance			4.4		µF
P_O	Output power	Output voltage initial setting	0		35	W
η	Efficiency	50 % of max I_O, V_I = 27 V		91.7		%
		max I_O, V_I = 27 V		91.0		
		50 % of max I_O, V_I = 53 V		89.4		
		max I_O, V_I = 53 V		90.5		
P_d	Power Dissipation	max I_O		3.8	5.6	W
P_{li}	Input idling power	I_O = 0 A, V_I = 53 V		1.6		W
P_{RC}	Input standby power	V_I = 53 V (turned off with RC)		0.5		W
f_s	Switching frequency	0-100 % of max I_O	255	285	315	kHz

V_{Oi}	Output voltage initial setting and accuracy	T_{P1} = +25°C, V_I = 53 V, I_O = 7 A	4.9	5	5.1	V
V_O	Output adjust range	See operating information	4.5		5.5	V
	Output voltage tolerance band	10-100 % of max I_O	4.85		5.15	V
	Idling voltage	I_O = 0 A	4.9		5.1	V
	Line regulation	max I_O		±5	±25	mV
	Load regulation	V_I = 53 V, 0-100 % of max I_O		±5	±25	mV
V_{tr}	Load transient voltage deviation	V_I = 53 V, Load step 25-75-25 % of max I_O, di/dt = 5 A/µs, C_o = 700 µF		±300	±500	mV
t_{tr}	Load transient recovery time			250	400	µs
t_r	Ramp-up time (from 10−90 % of V_{Oi})	10-100 % of max I_O		5.0	15	ms
t_s	Start-up time (from V_I connection to 90 % of V_{Oi})			6.5	20	ms
t_f	V_I shut-down fall time (from V_I off to 10 % of V_O)	max I_O	0.2	2		ms
		I_O = 0 A		1.4		s
t_{RC}	RC start-up time	max I_O		7.0		ms
	RC shut-down fall time (from RC off to 10 % of V_O)	max I_O	0.2	0.4		ms
		I_O = 0 A		2.3		s
I_O	Output current		0		7	A
I_{lim}	Current limit threshold	V_I = 53 V, T_{P1} < max T_{P1}		11	14.5	A
I_{sc}	Short circuit current	T_{P1} = 25ºC, Note 1		12		A
V_{Oac}	Output ripple & noise	See ripple & noise section, max I_O, V_{Oi}, C_o = 220 µF		25	60	mVp-p
OVP	Over voltage protection	T_{P1} = +25°C, V_I = 53 V, 0-100 % of max I_O		7		V

1) RMS value

© Flex

5 V/7 A Typical Characteristics

PKU 5311E PI

Efficiency

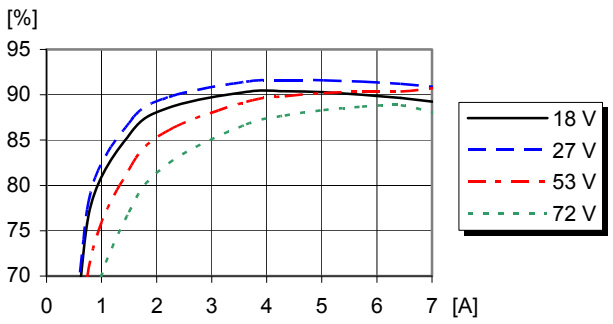

Efficiency vs. load current and input voltage at T_{P1} = +25°C

Power Dissipation

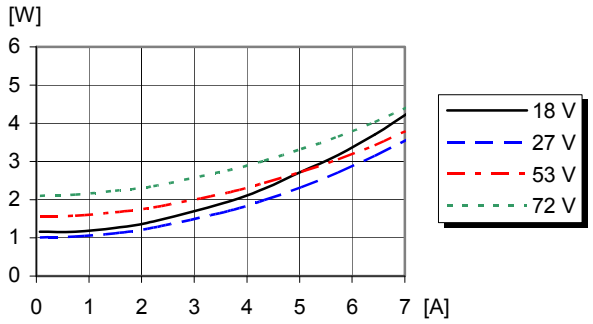

Dissipated power vs. load current and input voltage at T_{P1} = +25°C

Output Characteristics

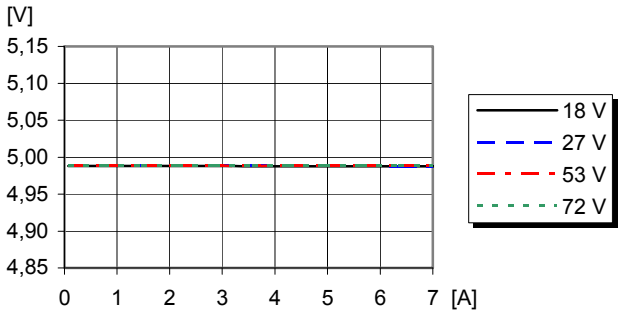

Output voltage vs. load current at T_{P1} = +25°C

Current Limit Characteristics

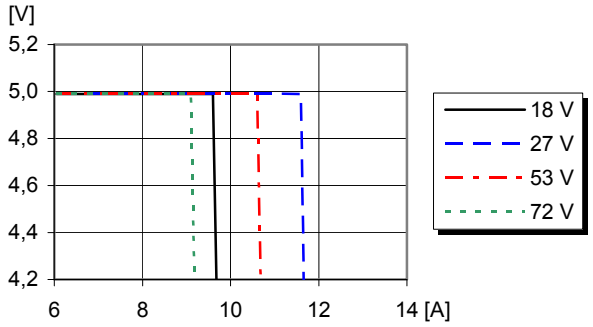

Output voltage vs. load current at I_O > max I_O, T_{P1} = +25°C
The module enters hiccup mode when the output current exceeds current limit.

Output Current Derating

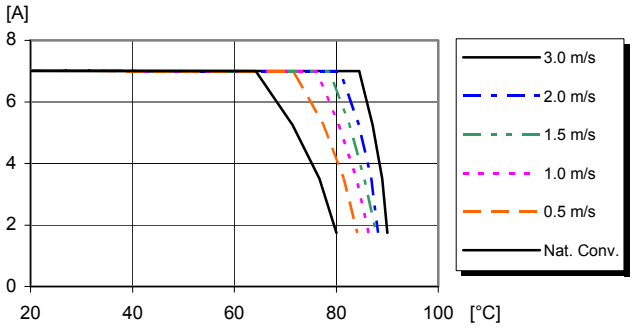

Available load current vs. ambient air temperature and airflow at V_I = 53 V. See Thermal Consideration section.

© Flex

5 V/7 A Typical Characteristics

PKU 5311E PI

Start-up

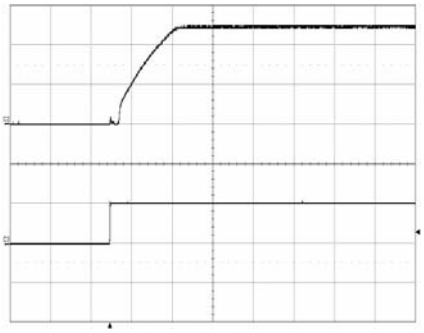

Start-up enabled by connecting V_I at:
T_{P1} = +25°C, V_I = 53 V,
I_O = 7 A load.

Top trace: output voltage (2 V/div.).
Bottom trace: input voltage (50 V/div.).
Time scale: (5 ms/div.).

Shut-down

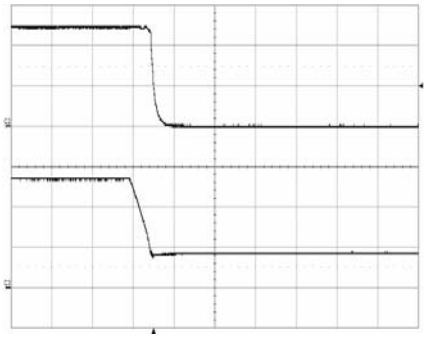

Shut-down enabled by disconnecting V_I at:
T_{P1} = +25°C, V_I = 53 V,
I_O = 7 A resistive load.

Top trace: output voltage (2 V/div.).
Bottom trace: input voltage (20 V/div.).
Time scale: (2 ms/div.).

Output Ripple & Noise

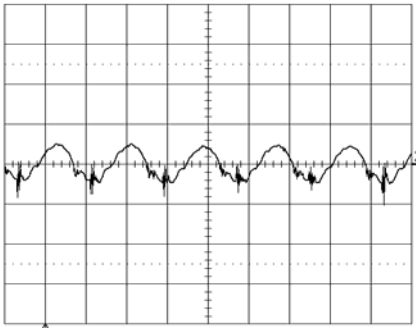

Output voltage ripple at:
T_{P1} = +25°C, V_I = 53 V,
I_O = 7 A resistive load.

Trace: output voltage (20 mV/div.).
Time scale: (2 µs/div.).
Additional C_o =220uF

Output Load Transient Response

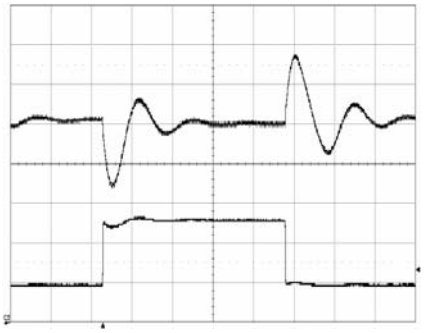

Output voltage response to load current step-change (1.75 –5.25 - 1. 75 A) at:
T_{P1} =+25°C, V_I = 53 V, C_o = 690 µF

Top trace: output voltage (200 mV/div.).
Bottom trace: load current (2 A/div.).
Time scale: (0.5 ms/div.).

Output Voltage Adjust (see operating information)

Passive adjust
The resistor value for an adjusted output voltage is calculated by using the following equations:

Output Voltage Adjust Upwards, Increase:

$$Radj = \left(\frac{5.11 \times 5.0(100 + \Delta\%)}{1.225 \times \Delta\%} - \frac{511}{\Delta\%} - 10.22 \right) \text{ k}\Omega$$

Example: Increase 4% =>V_O = 5.2 Vdc

$$\left(\frac{5.11 \times 5.0(100 + 4)}{1.225 \times 4} - \frac{511}{4} - 10.22 \right) \text{ k}\Omega = 404 \text{ k}\Omega$$

Active adjust
The output voltage may be adjusted using a voltage applied to the Vadj pin. This voltage is calculated by using the following equations:

$$V_{adj} = \left(1.225 + 2.45 \times \frac{V_{desired} - 5.0}{5.0} \right) \text{V}$$

Example: Upwards => 5.2 V

$$\left(1.225 + 2.45 \times \frac{5.2 - 5.0}{5.0} \right) \text{V} = 1.323 \text{ V}$$

© Flex

12 V/2.75 A Electrical Specification

PKU 5313E PI

T_{P1} = -30 to +90ºC, V_I = 18 to 72 V, unless otherwise specified under Conditions.
Typical values given at: T_{P1} = +25°C, V_I= 53 V_I max I_O, unless otherwise specified under Conditions.
Additional C_O = 47 µF.

Characteristics		Conditions	min	typ	max	Unit
V_I	Input voltage range		18		72	V
V_{Ioff}	Turn-off input voltage	Decreasing input voltage	15	16	17	V
V_{Ion}	Turn-on input voltage	Increasing input voltage	16	17	18	V
C_I	Internal input capacitance			4.4		µF
P_O	Output power	Output voltage initial setting	0		33	W
η	Efficiency	50 % of max I_O, , V_I = 27 V		88.8		%
		max I_O, , V_I = 27 V		89.2		
		50 % of max I_O, V_I = 53 V		85.6		
		max I_O, V_I = 53 V		88.0		
P_d	Power Dissipation	max I_O		4.8	8.2	W
P_{li}	Input idling power	I_O = 0 A, V_I = 53 V		2.2		W
P_{RC}	Input standby power	V_I = 53 V (turned off with RC)		0.4		W
f_s	Switching frequency	0-100 % of max I_O	255	285	315	kHz

V_{Oi}	Output voltage initial setting and accuracy	T_{P1} = +25°C, V_I = 53 V, I_O = 2.75 A	11.76	12.0	12.24	V
V_O	Output adjust range	See operating information	10.8		13.2	V
	Output voltage tolerance band	10-100 % of max I_O	11.64		12.36	V
	Idling voltage	I_O = 0 A	11.76		12.24	V
	Line regulation	max I_O		±5	±50	mV
	Load regulation	V_I = 53 V, 0-100 % of max I_O		±5	±50	mV
V_{tr}	Load transient voltage deviation	V_I = 53 V, Load step 25-75-25 % of max I_O, di/dt = 5 A/µs, C_o = 275 µF		±400	±600	mV
t_{tr}	Load transient recovery time			75	150	µs
t_r	Ramp-up time (from 10−90 % of V_{Oi})	10-100 % of max I_O		5		ms
t_s	Start-up time (from V_I connection to 90 % of V_{Oi})			7		ms
t_f	V_I shut-down fall time (from V_I off to 10 % of V_O)	max I_O	0.4	0.6		ms
		I_O = 0 A		1		s
t_{RC}	RC start-up time	max I_O		30		ms
	RC shut-down fall time (from RC off to 10 % of V_O)	max I_O	0.4	0.6		ms
		I_O = 0 A		0.7		s
I_O	Output current		0		2.75	A
I_{lim}	Current limit threshold	V_I = 53 V, T_{P1} < max T_{P1}		4.3	5.6	A
I_{sc}	Short circuit current	T_{P1} = 25ºC, Note 1		8.6		A
V_{Oac}	Output ripple & noise	See ripple & noise section, max I_O, V_{Oi}, C_o = 47 µF		25	50	mVp-p
OVP	Over voltage protection	T_{P1} = +25°C, V_I = 53 V, 0-100 % of max I_O		16		V

1) RMS value

© Flex

12 V/2.75 A Typical Characteristics

PKU 5313E PI

Efficiency

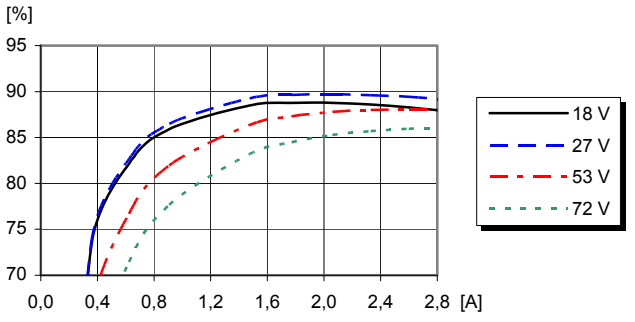

Efficiency vs. load current and input voltage at T_{P1} = +25°C

Power Dissipation

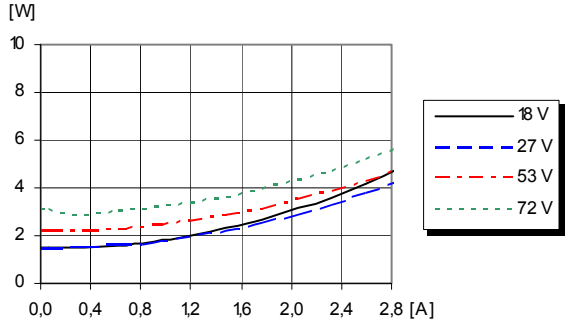

Dissipated power vs. load current and input voltage at T_{P1} = +25°C

Output Characteristics

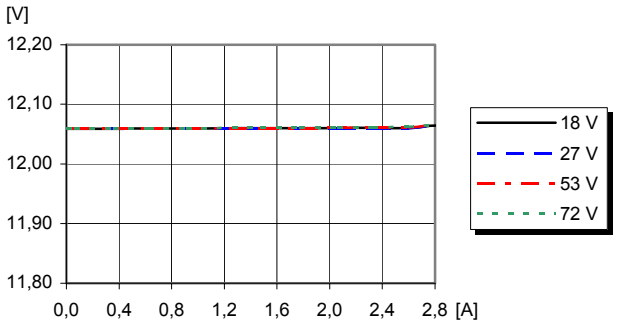

Output voltage vs. load current at T_{P1} = +25°C

Current Limit Characteristics

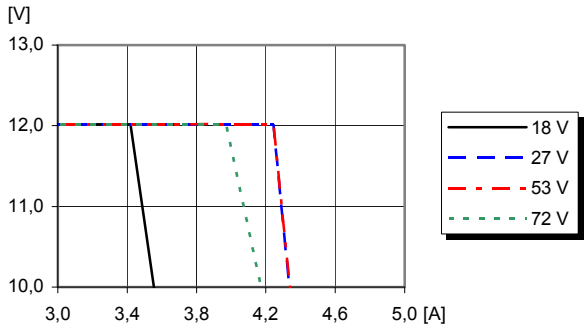

Output voltage vs. load current at I_O > max I_O, T_{P1} = +25°C
The module enters hiccup mode when the output current exceeds current limit.

Output Current Derating

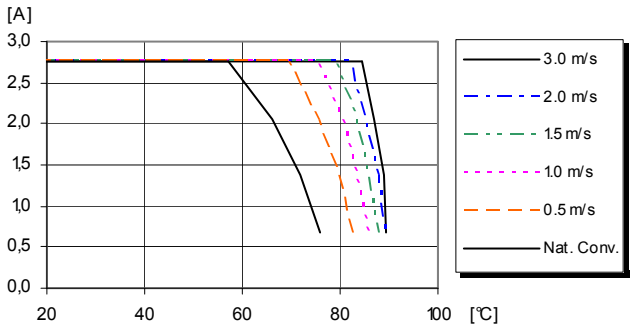

Available load current vs. ambient air temperature and airflow at V_I = 53 V. See Thermal Consideration section.

© Flex

12 V/2.75 A Typical Characteristics

PKU 5313E PI

Start-up

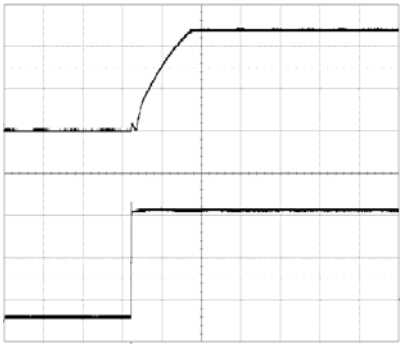

Start-up enabled by connecting V_I at:
T_{P1} = +25°C, V_I = 53 V,
I_O = 2.75 A resistive load.

Top trace: output voltage (5 V/div.).
Bottom trace: input voltage (20 V/div.).
Time scale: (5 ms/div.).

Shut-down

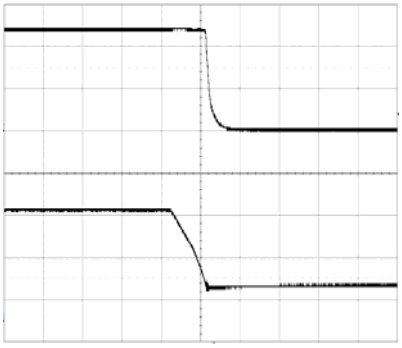

Shut-down enabled by disconnecting V_I at:
T_{P1} = +25°C, V_I = 53 V,
I_O = 2.75 A resistive load.

Top trace: output voltage (5 V/div.).
Bottom trace: input voltage (20 V/div.).
Time scale: (2 ms/div.).

Output Ripple & Noise

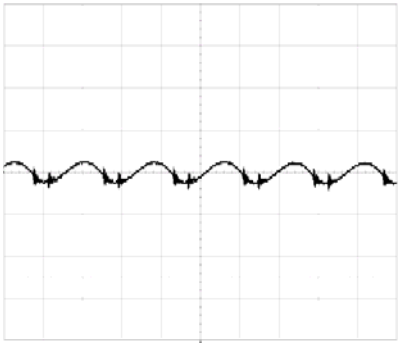

Output voltage ripple at:
T_{P1} = +25°C, V_I = 53 V,
I_O = 2.75 A resistive load.

Trace: output voltage (20 mV/div.).
Time scale: (2 µs/div.).
Additional C_o =47uF

Output Load Transient Response

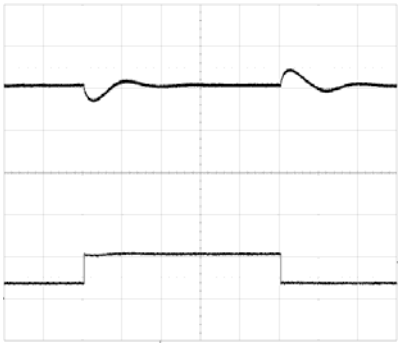

Output voltage response to load current step-change (0.7-2.1-0.7 A) at:
T_{P1} =+25°C, V_I = 53 V, C_o = 275 µF

Top trace: output voltage (1 V/div.).
Bottom trace: load current (2 A/div.).
Time scale: (0.5 ms/div.).

Output Voltage Adjust (see operating information)

Passive adjust
The resistor value for an adjusted output voltage is calculated by using the following equations:

Output Voltage Adjust Upwards, Increase:

$$Radj = \left(\frac{5.11 \times 12.0(100 + \Delta\%)}{1.225 \times \Delta\%} - \frac{511}{\Delta\%} - 10.22 \right) \text{ k}\Omega$$

Example: Increase 4% =>V_{out} = 12.48 Vdc

$$\left(\frac{5.11 \times 12.0(100 + 4)}{1.225 \times 4} - \frac{511}{4} - 10.22 \right) \text{ k}\Omega = 1174 \text{ k}\Omega$$

Active adjust
The output voltage may be adjusted using a voltage applied to the Vadj pin. This voltage is calculated by using the following equations:

$$V_{adj} = \left(1.225 + 2.45 \times \frac{V_{desired} - 12.0}{12.0} \right) \text{V}$$

Example: Upwards => 12.48 V

$$\left(1.225 + 2.45 \times \frac{12.48 - 12.0}{12.0} \right) \text{V} = 1.323 \text{ V}$$

© Flex

15 V/2 A Electrical Specification

PKU 5315E PI

T_{P1} = -30 to +90ºC, V_I = 18 to 72 V, unless otherwise specified under Conditions.
Typical values given at: T_{P1} = +25°C, V_I= 53 V_I max I_O, unless otherwise specified under Conditions.
Additional C_o = 47 µF.

Characteristics		Conditions	min	typ	max	Unit
V_I	Input voltage range		18		72	V
V_{Ioff}	Turn-off input voltage	Decreasing input voltage	15	16	17	V
V_{Ion}	Turn-on input voltage	Increasing input voltage	16	17	18	V
C_I	Internal input capacitance			4.4		µF
P_O	Output power	Output voltage initial setting	0		30	W
η	Efficiency	50 % of max I_O, , V_I = 27 V		85.6		%
		max I_O, , V_I = 27 V		89.0		
		50 % of max I_O, V_I = 53 V		80.9		
		max I_O, V_I = 53 V		86.7		
P_d	Power Dissipation	max I_O		4.6	8	W
P_{li}	Input idling power	I_O = 0 A, V_I = 53 V		3.2		W
P_{RC}	Input standby power	V_I = 53 V (turned off with RC)		0.4		W
f_s	Switching frequency	0-100 % of max I_O	280	315	350	kHz

V_{Oi}	Output voltage initial setting and accuracy	T_{P1} = +25°C, V_I = 53 V, I_O = 2 A	14.70	15.0	15.30	V
V_O	Output adjust range	See operating information, Note 1	13.5		16.5	V
	Output voltage tolerance band	10-100 % of max I_O	14.70		15.30	V
	Idling voltage	I_O = 0 A	14.70		15.30	V
	Line regulation	max I_O		±50	±100	mV
	Load regulation	V_I = 53 V, 0-100 % of max I_O		±50	±100	mV
V_{tr}	Load transient voltage deviation	V_I = 53 V, Load step 25-75-25 % of max I_O, di/dt = 5 A/µs, C_o = 200 µF		±300	±500	mV
t_{tr}	Load transient recovery time			150	250	µs
t_r	Ramp-up time (from 10−90 % of V_{Oi})	10-100 % of max I_O		5		ms
t_s	Start-up time (from V_I connection to 90 % of V_{Oi})			6		ms
t_f	V_I shut-down fall time (from V_I off to 10 % of V_O)	max I_O	1	3		ms
		I_O = 0 A		1		s
t_{RC}	RC start-up time	max I_O		28		ms
	RC shut-down fall time (from RC off to 10 % of V_O)	max I_O	1	2		ms
		I_O = 0 A		0.5		s
I_O	Output current		0		2	A
I_{lim}	Current limit threshold	V_I = 53 V, T_{P1} < max T_{P1}		3.2	5	A
I_{sc}	Short circuit current	T_{P1} = 25ºC, Note 2		6		A
V_{Oac}	Output ripple & noise	See ripple & noise section, max I_O, V_{Oi}, C_o = 47uF		25	50	mVp-p
OVP	Over voltage protection	T_{P1} = +25°C, V_I = 53 V, 0-100 % of max I_O		19		V

1) V_I min 24 V to obtain 16.5 V at 30 W output power.

2) RMS value

© Flex

15 V/2 A Typical Characteristics

PKU 5315E PI

Efficiency

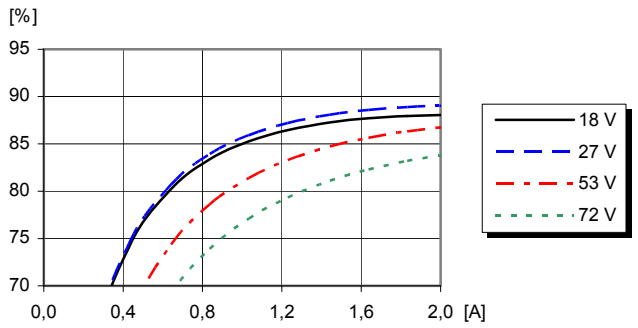

Efficiency vs. load current and input voltage at T_{P1} = +25°C

Power Dissipation

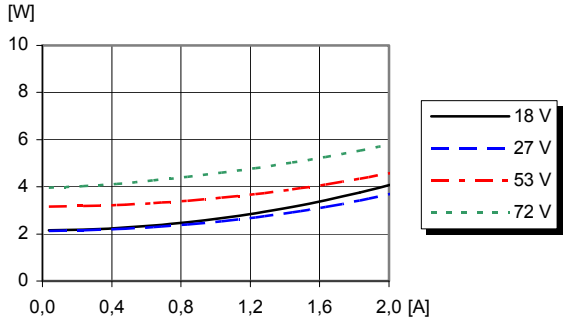

Dissipated power vs. load current and input voltage at T_{P1} = +25°C

Output Characteristics

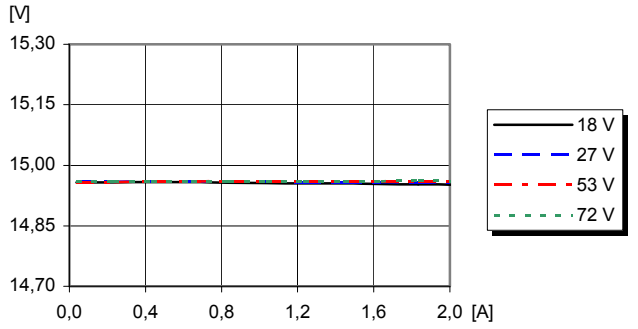

Output voltage vs. load current at T_{P1} = +25°C

Current Limit Characteristics

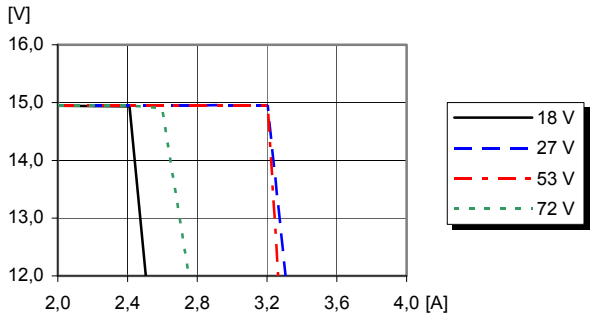

Output voltage vs. load current at I_O > max I_O , T_{P1} = +25°C
The module enters hiccup mode when the output current exceeds current limit.

Output Current Derating

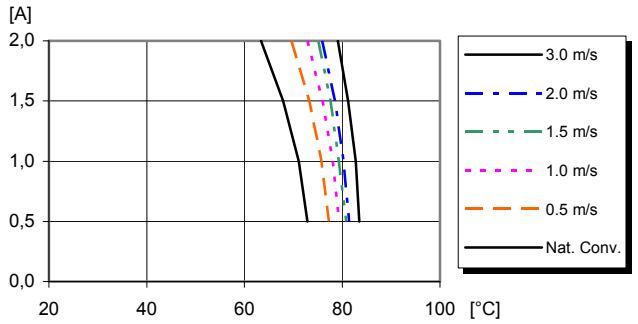

Available load current vs. ambient air temperature and airflow at V_I = 53 V. See Thermal Consideration section.

© Flex

15 V/2 A Typical Characteristics

PKU 5315E PI

Start-up

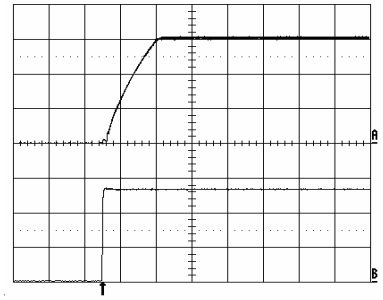

Start-up enabled by connecting V_I at:
T_{P1} = +25°C, V_I = 53 V,
I_O = 2 A resistive load.

Top trace: output voltage (5 V/div.).
Bottom trace: input voltage (20 V/div.).
Time scale: (5 ms/div.).

Shut-down

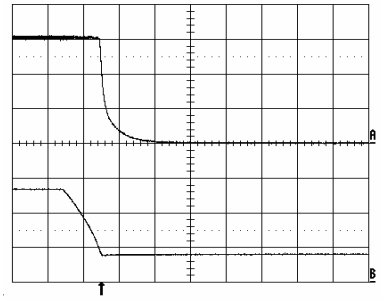

Shut-down enabled by disconnecting V_I at:
T_{P1} = +25°C, V_I = 53 V,
I_O = 2 A resistive load.

Top trace: output voltage (5 V/div.).
Bottom trace: input voltage (20 V/div.).
Time scale: (2 ms/div.).

Output Ripple & Noise

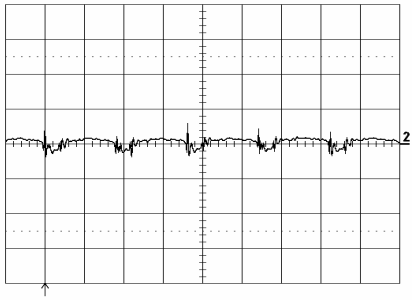

Output voltage ripple at:
T_{P1} = +25°C, V_I = 53 V,
I_O = 2 A resistive load.

Trace: output voltage (20 mV/div.).
Time scale: (2 µs/div.).
Additional C_o =47uF

Output Load Transient Response

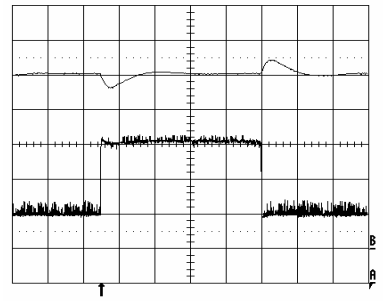

Output voltage response to load current step-change (0.5-1.5-0.5 A) at:
T_{P1} =+25°C, V_I = 53 V, C_o = 200uF

Top trace: output voltage (1 V/div.).
Bottom trace: load current (0.5 A/div.).
Time scale: (0.1 ms/div.).

Output Voltage Adjust (see operating information)

Passive adjust
The resistor value for an adjusted output voltage is calculated by using the following equations:

Output Voltage Adjust Upwards, Increase:

$$Radj = \left(\frac{5.11 \times 15.0(100 + \Delta\%)}{1.225 \times \Delta\%} - \frac{511}{\Delta\%} - 10.22 \right) \text{k}\Omega$$

Example: Increase 4% =>V_{out} = 15.6 Vdc

$$\left(\frac{5.11 \times 15.0(100 + 4)}{1.225 \times 4} - \frac{511}{4} - 10.22 \right) \text{k}\Omega = 1489\ \text{k}\Omega$$

Active adjust
The output voltage may be adjusted using a voltage applied to the Vadj pin. This voltage is calculated by using the following equations:

$$V_{adj} = \left(1.225 + 2.45 \times \frac{V_{desired} - 15.0}{15.0} \right) \text{V}$$

Example: Upwards => 15.6 V

$$\left(1.225 + 2.45 \times \frac{15.6 - 15.0}{15.0} \right) \text{V} = 1.323\ \text{V}$$

© Flex

EMC Specification

Conducted EMI measured according to EN55022, CISPR 22 and FCC part 15J (see test set-up). See Design Note 009 for further information. The fundamental switching frequency is 285 kHz for PKU 5310E PI, PKU 5311E PI, and PKU 5313E PI. For PKU 5315E PI it is 315 kHz.

Conducted EMI Input terminal value (typ)

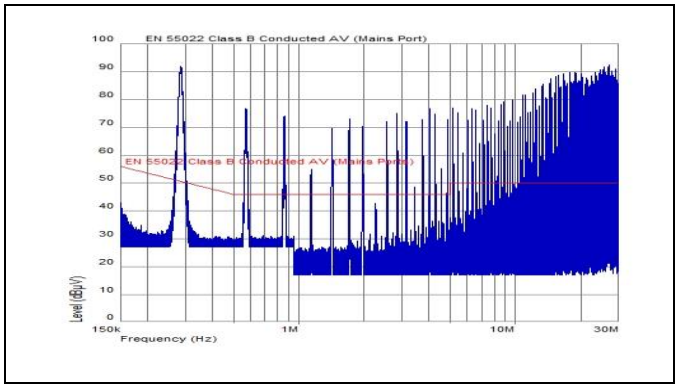

EMI without filter @ V_I = 53 V, max I_O.

External filter (class B)

Required external input filter in order to meet class B in EN 55022, CISPR 22 and FCC part 15J.

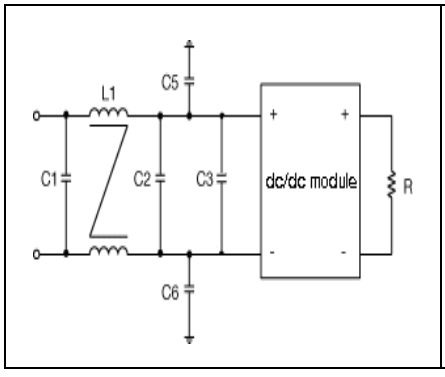

Filter components:
C1,2 = 2.2 µF
C3 = 100 µF
C5,6 = 10 nF, 2kV
L1 = 1.47mH

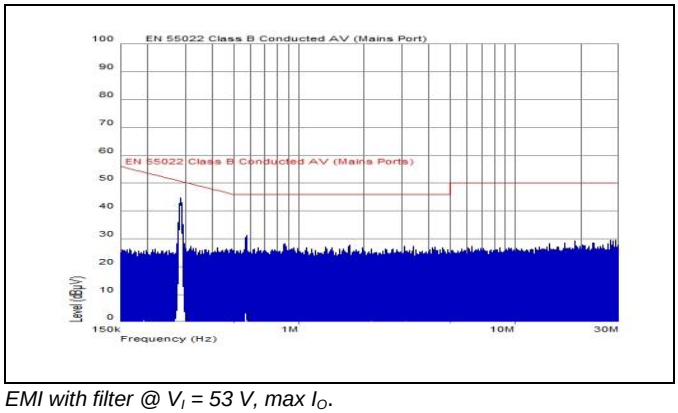

EMI with filter @ V_I = 53 V, max I_O.

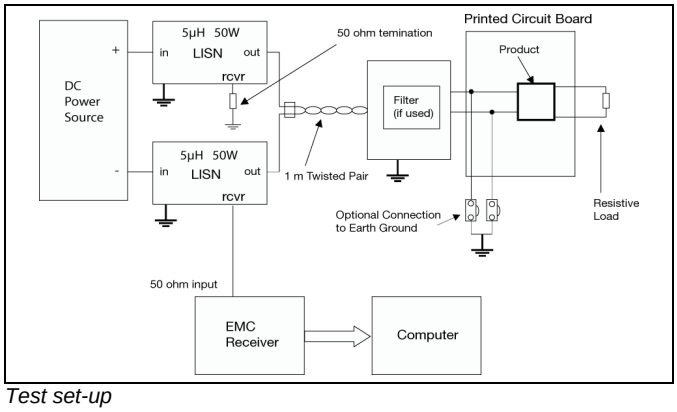

Test set-up

Layout recommendations

The radiated EMI performance of the Product will depend on the PCB layout and ground layer design. It is also important to consider the stand-off of the product. If a ground layer is used, it should be connected to the output of the product and the equipment ground or chassis.

A ground layer will increase the stray capacitance in the PCB and improve the high frequency EMC performance.

Output ripple and noise

Output ripple and noise measured according to figure below. See Design Note 022 for detailed information.

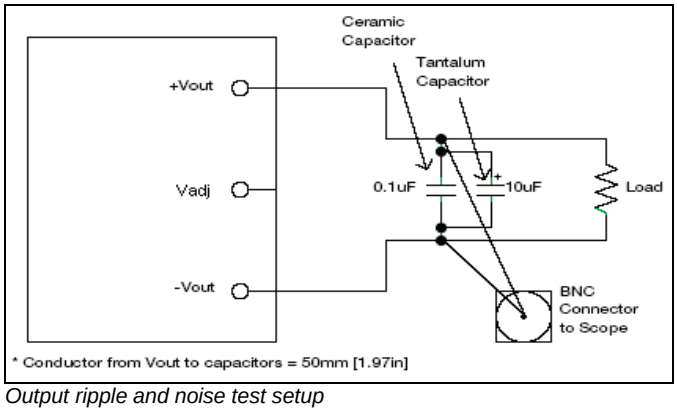

Output ripple and noise test setup

© Flex

Operating information

Input Voltage

The input voltage range 18 to 72Vdc meets the requirements of the European Telecom Standard ETS 300 132-2 for normal input voltage range in –48 and –60 Vdc systems, -40.5 to -57.0 V and –50.0 to -72 V respectively.

At input voltages exceeding 72 V, the power loss will be higher than at normal input voltage. Precaution must be taken to keep T_{P1} below +95°C. The absolute maximum continuous input voltage is 80 Vdc.

Turn-off Input Voltage

The products monitor the input voltage and will turn on and turn off at predetermined levels.
The minimum hysteresis between turn on and turn off input voltage is 1V. The input voltage supply must have low impedance to prevent the risk of input oscillation, poor supply can also cause shutdown-bouncing.

Remote Control (RC)

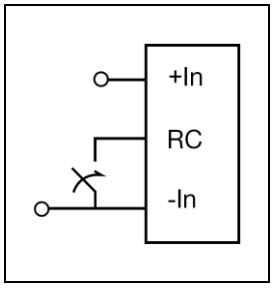

The products are fitted with a remote control function referenced to the primary negative input connection (-In), with negative and positive logic options available. The RC function allows the product to be turned on/off by an external device like a semiconductor or mechanical switch. The RC pin has an internal pull up resistor to +In.

The maximum required sink current is 1 mA. When the RC pin is left open, the voltage generated on the RC pin is 4.5 – 5.5 V.

The standard product is provided with “negative logic” remote control and will be off until the RC pin is connected to the -In. To turn on the product the voltage between RC pin and -In should be less than 1V.
To turn off the converter the RC pin should be left open, or connected to a voltage higher than 4 V referenced to -In. In situations where it is desired to have the product to power up automatically without the need for control signals or a switch, the RC pin can be wired directly to -In.

The second option is “positive logic” remote control, which can be ordered by adding the suffix “P” to the end of the part number.
When the RC pin is left open, the product starts up automatically when the input voltage is applied.
Turn off is achieved by connecting the RC pin to the -In. To ensure safe turn off the voltage difference between RC pin and the -In pin shall be less than 1V. The product will restart automatically when this connection is opened.

See Design Note 021 for detailed information.

Input and Output Impedance

The impedance of both the input source and the load will interact with the impedance of the DC/DC converter. It is important that the input source has low characteristic impedance.

The performance in some applications can be enhanced by addition of external capacitance as described in External Decoupling Capacitors.

If the input voltage source contains significant inductance, the addition of a low ESR 47 µF capacitor across the input of the converter will ensure stable operation in all conditions.

External Decoupling Capacitors

The products have been designed to operate with a minimum capacitance connected to their output.

When powering loads with significant dynamic current requirements, the voltage regulation at the point of load can be improved by addition of decoupling capacitors at the load. The most effective technique is to locate low ESR ceramic and electrolytic capacitors as close to the load as possible, using several parallel capacitors to lower the effective ESR. The ceramic capacitors will handle high-frequency dynamic load changes while the electrolytic capacitors are used to handle low frequency dynamic load changes. Ceramic capacitors will also reduce any high frequency noise at the load.

It is equally important to use low resistance and low inductance PCB layouts and cabling. If significant inductance are within the load distribution, >50% of the stated “Minimum Output Capacitance” shall be located at the module’s output.

External decoupling capacitors will become part of the control loop of the DC/DC converter and may affect the stability margins. As a “rule of thumb”, 100 µF/A of output current can be added without any additional analysis. The ESR of the capacitors is a very important parameter. Flex Power Modules guarantee stable operation with a verified ESR value of >10 mΩ across the output connections.

	Minimum Input Capacitance	Minimum Output Capacitance
PKU 5310E PI	47uF	220uF
PKU 5311E PI	47uF	150uF
PKU 5313E PI	47uF	47uF
PKU 5315E PI	47uF	47uF

Minimum capacitance

For further information please contact your local Flex Power Modules representative.

© Flex

Operating information continued

Output Voltage Adjust (V_{adj})

The products have an Output Voltage Adjust pin (V_{adj}). This pin can be used to adjust the output voltage above or below Output voltage initial setting.

When increasing the output voltage, the voltage at the output pins must be kept below the threshold of the over voltage protection, (OVP) to prevent the product from entering OVP. At increased output voltages the maximum power rating of the product remains the same, and the max output current must be decreased correspondingly.

To increase the voltage the resistor should be connected between the V_{adj} pin and +Out pin. The resistor value of the Output voltage adjust function is according to information given under the Output section for the respective product.

To decrease the output voltage, the resistor should be connected between the V_{adj} pin and –Out pin.

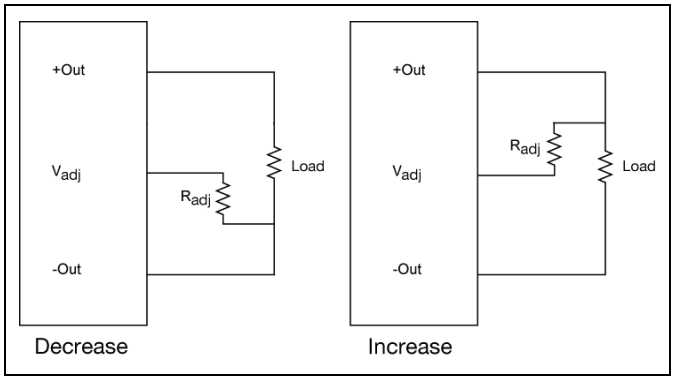

Over Temperature Protection (OTP)

The converters are protected from thermal overload by an internal over temperature shutdown circuit.

When T_{P1} as defined in thermal consideration section reach exceeds 105°C the converter will shut down.

The DC/DC converter will make continuous attempts to start up (non-latching mode) and resume normal operation automatically when the hot-spot temperature has dropped 10°C below the temperature threshold.

Over Voltage Protection (OVP)

The converters have output over voltage protection that will prevent output voltage to exceed the specified value in technical specification.

The converter will limit the outputvoltage to the maximum level. Converters will resume normal operation automatically after removal of the over voltage condition.

Over Current Protection (OCP)

The converters include current limiting circuitry for protection at continuous overload.

The output voltage will decrease towards zero for output currents in excess of max output current (max I_O).

After a time period exceeding 10 ms in OCP converters will enter hiccupmode to reduce average output power.

During short-circuit condition module temperature will increase rapidly and OTP function may be activated.

Module will not resume from hiccup shutdown period unless the temperature drops below the OTP re-activation temperature.

The converter will resume normal operation after removal of the overload. The load distribution should be designed for the maximum output short circuit current specified.

Pre-bias Start-up

The product has a Pre-bias start up functionality and will not sink current during start up or RC-off if a pre-bias source with less than 75% of V_o is present at the output terminals.

Precaution must be taken that reverse current might be present if V_i is disabled. Without V_i a small current will discharge external capacitors.

NB! Feeding V_o from external power supply for test purpose might without V_i cause high reverse current.

© Flex

Thermal Consideration

General

The products are designed to operate in different thermal environments and sufficient cooling must be provided to ensure reliable operation.

For products mounted on a PCB without a heat sink attached, cooling is achieved mainly by conduction, from the pins to the host board, and convection, which is dependant on the airflow across the product. Increased airflow enhances the cooling of the product. The Output Current Derating graph found in the Output section for each model provides the available output current vs. ambient air temperature and air velocity at V_I = 53 V.

The product is tested on a 254 x 254 mm, 35 µm (1 oz), 8-layer test board mounted vertically in a wind tunnel with a cross-section of 608 x 203 mm.

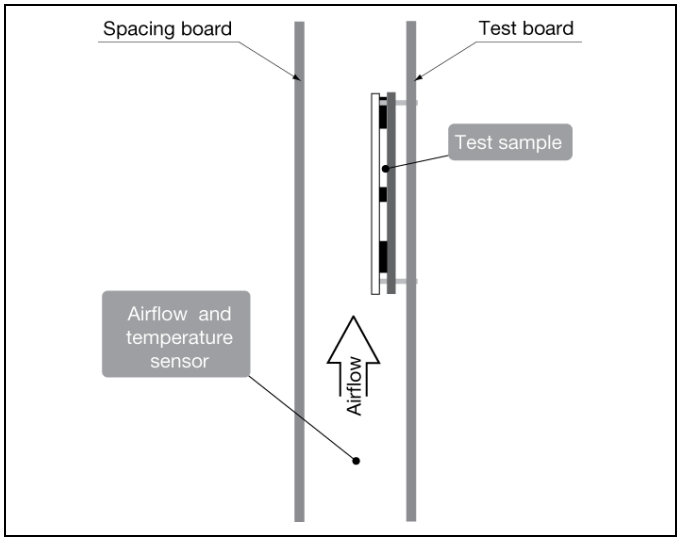

Proper cooling of the product can be verified by measuring the temperature at position P1. The temperature at this position should not exceed the max values provided in the table below. The number of points may vary with different thermal design and topology.

See Design Note 019 for further information.

Position	Description	Temp. limit
P1	Opto coupler	95º C

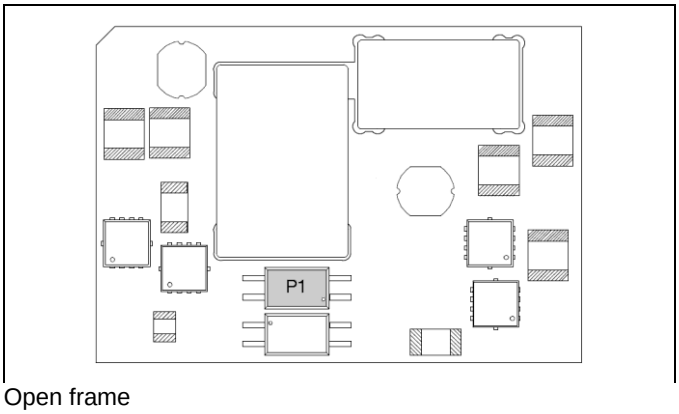

Open frame

Definition of reference temperature T_{P1}

The reference temperature is used to monitor the temperature limits of the product. Temperatures above maximum T_{P1}, meassured at the reference point P1 are not allowed and may cause degradation or permanent damage to the product. T_{P1} is also used to define the temperature range for normal operating conditions. T_{P1} is defined by the design and used to guarantee safety margins, proper operation and high reliability ot the product.

Connections

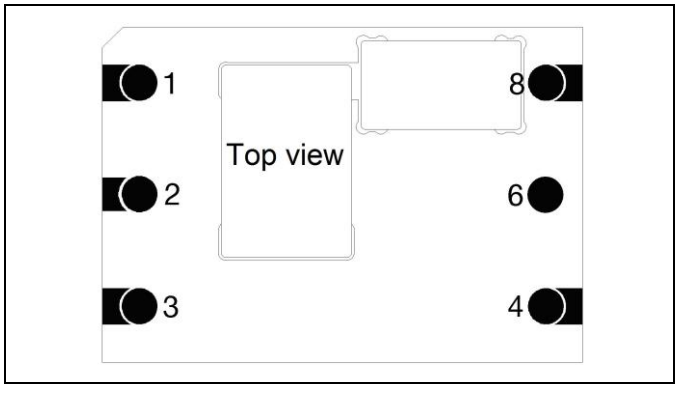

Pin	Designation	Function
1	+In	Positive Input
2	RC	Remote control
3	-In	Negative Input
4	-Out	Negative Output
6	Vadj	Output voltage adjust
8	+Out	Positive Output

Mechanical Information - Hole Mount, Open Frame Version

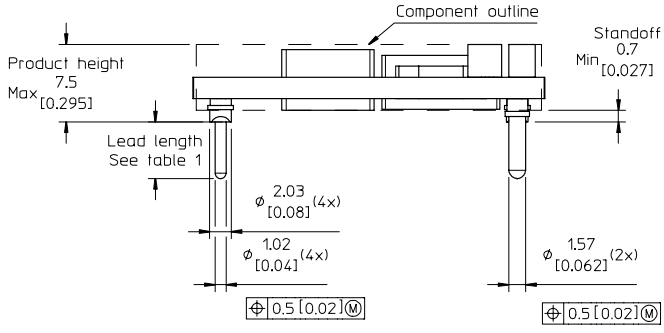

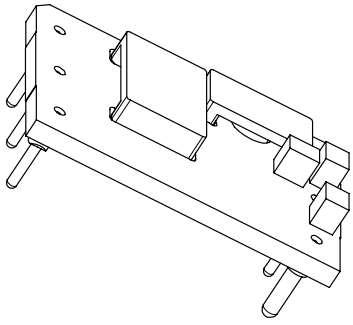

TOP VIEW
Pin positions according to the recommended footprint.

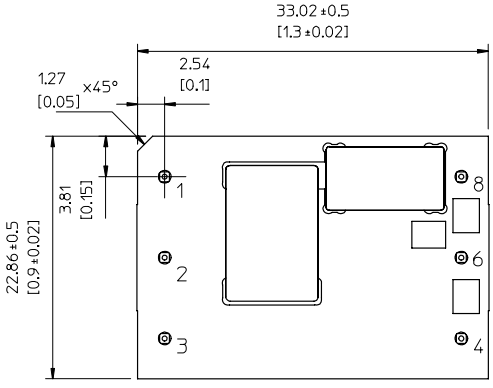

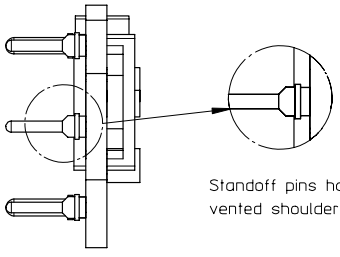

RECOMMENDED FOOTPRINT - TOP VIEW

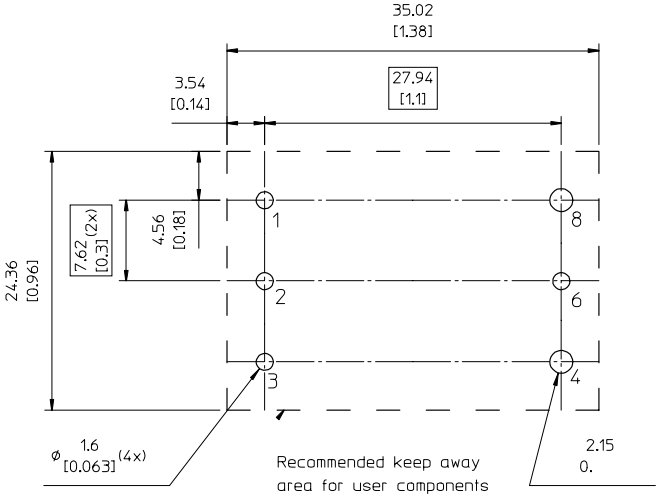

Table 1

Pin option	Lead length
Standard	5.33 [0.21]
LA	3.69 [0.145] (cut)
LB	4.57 [0.18] (cut)

Pins:
Material: Copper alloy
Plating: Min 0.1 µm Gold over 1-3 µm Nickel.

Weight: typical 10 g

All dimensions in mm [inch].
Tolerances unless specified
X.x mm ±0.5 mm [0.02]
X.xx mm ±0.25 mm [0.01]
(not applied on footprint or typical values)

All component placements – whether shown as physical components or symbolical outline – are for reference only and are subject to change throughout the product's life cycle, unless explicitly described and dimensioned in this drawing.

Mechanical Information - Surface Mount Version

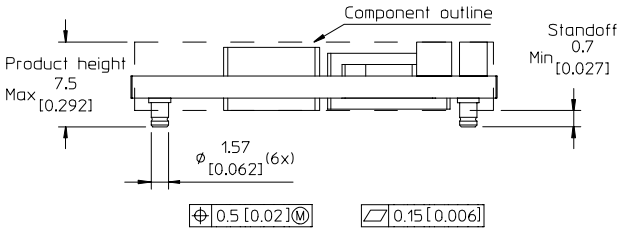

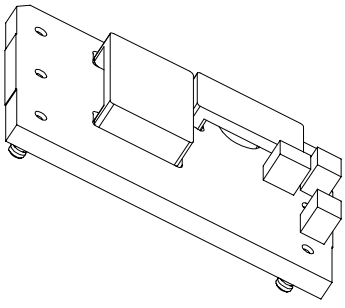

TOP VIEW
Pin positions according to the recommended footprint

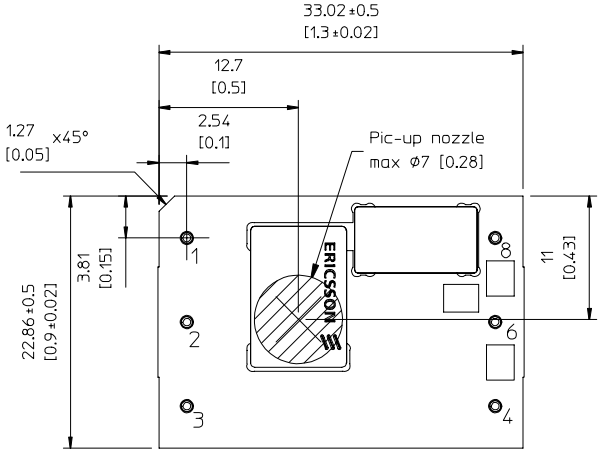

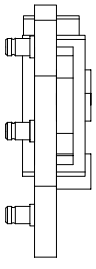

RECOMMENDED FOOTPRINT - TOP VIEW

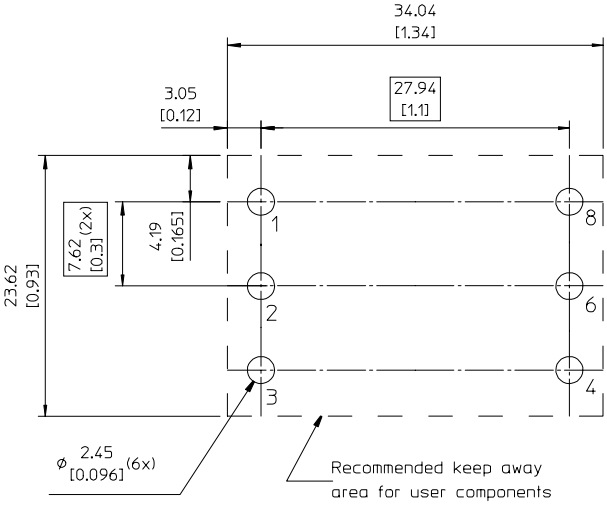

Layout considerations:
Use sufficient numbers of vias connected to ouput pin pads for proper thermal and current conductivity.

Pins:
Material: Copper alloy
Plating: Min 0.1 µm Gold over 1-3 µm Nickel.

Weight: typical 10 g

All dimensions in mm [inch].
Tolerances unless specified
X.x mm ±0.5 mm [0.02]
X.xx mm ±0.25 mm [0.01]
(not applied on footprint or typical values)

© Flex

Soldering Information - Surface Mounting

The surface mount product is intended for forced convection or vapor phase reflow soldering in SnPb or Pb-free processes.

The reflow profile should be optimised to avoid excessive heating of the product. It is recommended to have a sufficiently extended preheat time to ensure an even temperature across the host PCB and it is also recommended to minimize the time in reflow.

A no-clean flux is recommended to avoid entrapment of cleaning fluids in cavities inside the product or between the product and the host board, since cleaning residues may affect long time reliability and isolation voltage.

Minimum Pin Temperature Recommendations

Pin number 8 is chosen as reference location for the minimum pin temperature recommendation since this will likely be the coolest solder joint during the reflow process.

SnPb solder processes

For SnPb solder processes, a pin temperature (T_{PIN}) in excess of the solder melting temperature, (T_L, 183°C for Sn63Pb37) for more than 30 seconds and a peak temperature of 210°C is recommended to ensure a reliable solder joint.

Lead-free (Pb-free) solder processes

For Pb-free solder processes, a pin temperature (T_{PIN}) in excess of the solder melting temperature (T_L, 217 to 221°C for SnAgCu solder alloys) for more than 30 seconds and a peak temperature of 235°C on all solder joints is recommended to ensure a reliable solder joint.

General reflow process specifications		SnPb eutectic	Pb-free
Average ramp-up ($T_{PRODUCT}$)		3°C/s max	3°C/s max
Typical solder melting (liquidus) temperature	T_L	183°C	221°C
Minimum reflow time above T_L		30 s	30 s
Minimum pin temperature	T_{PIN}	210°C	235°C
Max product temperature	$T_{PRODUCT}$	225°C	260°C
Average ramp-down ($T_{PRODUCT}$)		6°C/s max	6°C/s max
Maximum time 25°C to peak		6 minutes	8 minutes

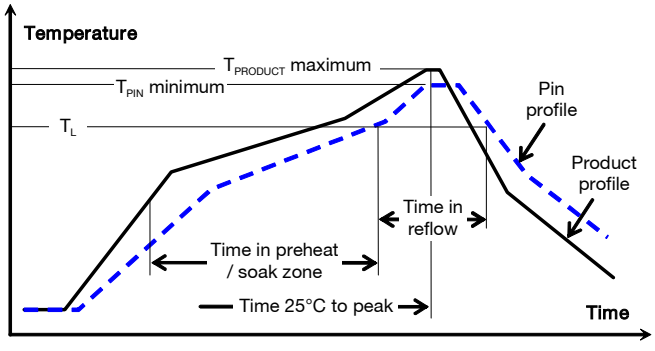

Maximum Product Temperature Requirements

Top of the product PCB near pin 2 is chosen as reference location for the maximum (peak) allowed product temperature ($T_{PRODUCT}$) since this will likely be the warmest part of the product during the reflow process.

SnPb solder processes

For SnPb solder processes, the product is qualified for MSL 1 according to IPC/JEDEC standard J-STD-020C.

During reflow $T_{PRODUCT}$ must not exceed 225 °C at any time.

Pb-free solder processes

For Pb-free solder processes, the product is qualified for MSL 3 according to IPC/JEDEC standard J-STD-020C.

During reflow $T_{PRODUCT}$ must not exceed 260 °C at any time.

Dry Pack Information

Products intended for Pb-free reflow soldering processes are delivered in standard moisture barrier bags according to IPC/JEDEC standard J-STD-033 (Handling, packing, shipping and use of moisture/reflow sensitivity surface mount devices).

Using products in high temperature Pb-free soldering processes requires dry pack storage and handling. In case the products have been stored in an uncontrolled environment and no longer can be considered dry, the modules must be baked according to J-STD-033.

Thermocoupler Attachment

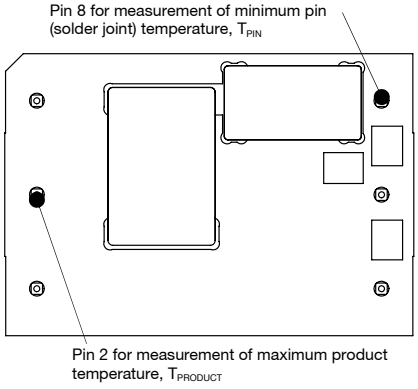

© Flex

Soldering Information - Hole Mounting

The hole mounted product is intended for plated through hole mounting by wave or manual soldering. The pin temperature is specified to maximum to 270°C for maximum 10 seconds.

A maximum preheat rate of 4°C/s and maximum preheat temperature of 150°C is suggested. When soldering by hand, care should be taken to avoid direct contact between the hot soldering iron tip and the pins for more than a few seconds in order to prevent overheating.

A no-clean flux is recommended to avoid entrapment of cleaning fluids in cavities inside the product or between the product and the host board. The cleaning residues may affect long time reliability and isolation voltage.

Delivery Package Information

The surface mount products are delivered in antistatic injection molded trays (Jedec design guide 4.10D standard) and in antistatic carrier tape (EIA 481 standard).
The through-hole mount products are delivered in antistatic injection molded trays (Jedec design guide 4.10D standard).

Carrier Tape Specifications	
Material	Antistatic PS
Surface resistance	10^7 < Ohm/square
Bakeability	The tape is not bakable
Tape width, W	56 mm [2.2 inch]
Pocket pitch, P_1	36 mm [1.42 inch]
Pocket depth, K_0	8.7 mm [0.343 inch]
Reel diameter	380 mm [15 inch]
Reel capacity	200 products /reel
Reel weight	2.3 kg/full reel

EIA standard carrier tape

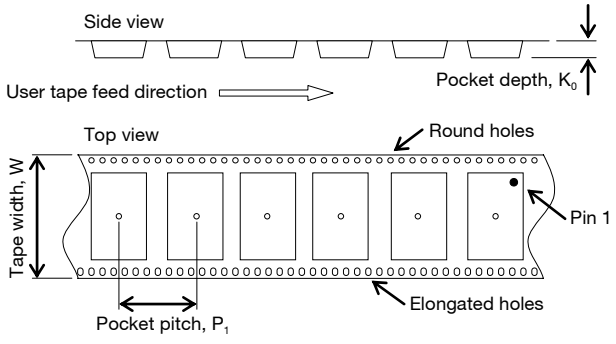

Tray Specifications	
Material	Antistatic PPE
Surface resistance	10^5 < Ohm/square < 10^{12}
Bakability	The trays can be baked at maximum 125°C for 48 hours
Tray thickness	18.5 mm [0.728 inch]
Tray capacity	30 products/tray
Tray weight	190 g empty, 500 g full tray

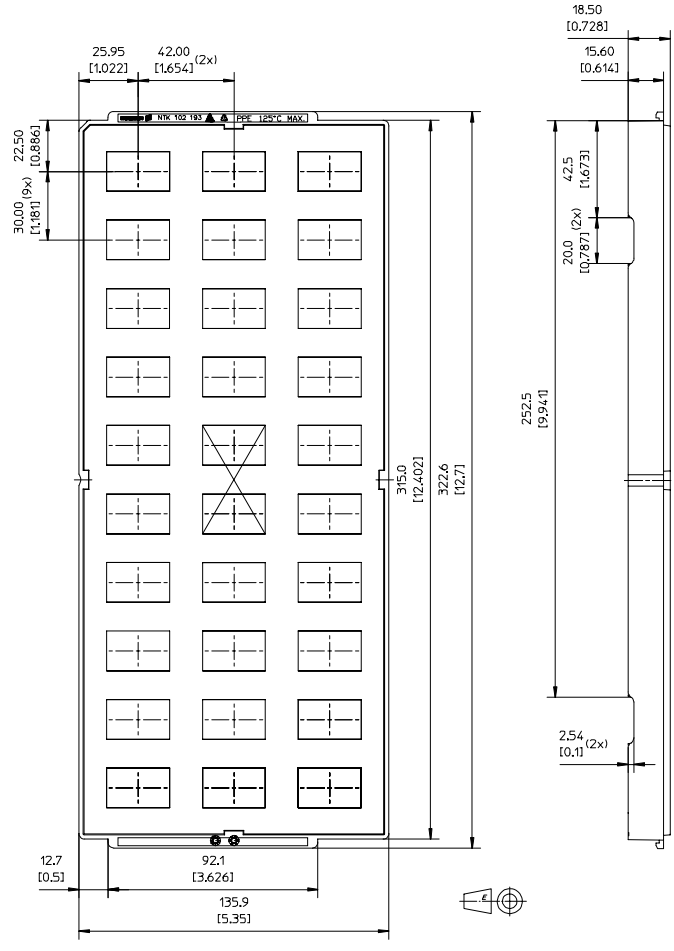

X = Vacuum pick up
All dimensions in mm [inch]
Tolerances: X.xx mm ±0.13 mm [0.005], X.x mm ±0.26 mm [0.01]
Note: tray dimensions refer to pocket center. For exact location of product pick up surface, refer to mechanical drawing.

© Flex

Product Qualification Specification

Characteristics			
External visual inspection	IPC-A-610		
Change of temperature (Temperature cycling)	IEC 60068-2-14 Na	Temperature range Number of cycles Dwell/transfer time	-40 to 100°C 1000 15 min/0-1 min
Cold (in operation)	IEC 60068-2-1 Ad	Temperature T_A Duration	-45°C 72 h
Damp heat	IEC 60068-2-67 Cy	Temperature Humidity Duration	85°C 85 % RH 1000 hours
Dry heat	IEC 60068-2-2 Bd	Temperature Duration	125°C 1000 h
Electrostatic discharge susceptibility	IEC 61340-3-1, JESD 22-A114 IEC 61340-3-2, JESD 22-A115	Human body model (HBM) Machine Model (MM)	Class 1C, 1000 V Class 3, 200 V
Immersion in cleaning solvents	IEC 60068-2-45 XA, method 2	Water Glycol ether Isopropyl alcohol	55°C 35°C 35°C
Mechanical shock	IEC 60068-2-27 Ea	Peak acceleration Duration	100 g 6 ms
Moisture reflow sensitivity [1]	J-STD-020C	Level 1 (SnPb-eutectic) Level 3 (Pb Free)	225°C 260°C
Operational life test	MIL-STD-202G, method 108A	Duration	1000 h
Resistance to soldering heat [2]	IEC 60068-2-20 Tb, method 1A	Solder temperature Duration	270°C 10-13 s
Robustness of terminations	IEC 60068-2-21 Test Ua1 IEC 60068-2-21 Test Ue1	Through hole mount products Surface mount products	All leads All leads
Solderability	IEC 60068-2-58 test Td [1] IEC 60068-2-20 test Ta [2]	Preconditioning Temperature, SnPb Eutectic Temperature, Pb-free Preconditioning Temperature, SnPb Eutectic Temperature, Pb-free	150°C dry bake 16 h 215°C 235°C Steam ageing 235°C 245°C
Vibration, broad band random	IEC 60068-2-64 Fh, method 1	Frequency Spectral density Duration	10 to 500 Hz 0.07 g^2/Hz 10 min in each direction

Notes
[1] Only for products intended for reflow soldering (surface mount products)
[2] Only for products intended for wave soldering (plated through hole products)