0.35mm Pitch 0.8mm Height Hybrid Power/Signal Connectors for Board-to-Board and FPC-to-Board

BM24 Series

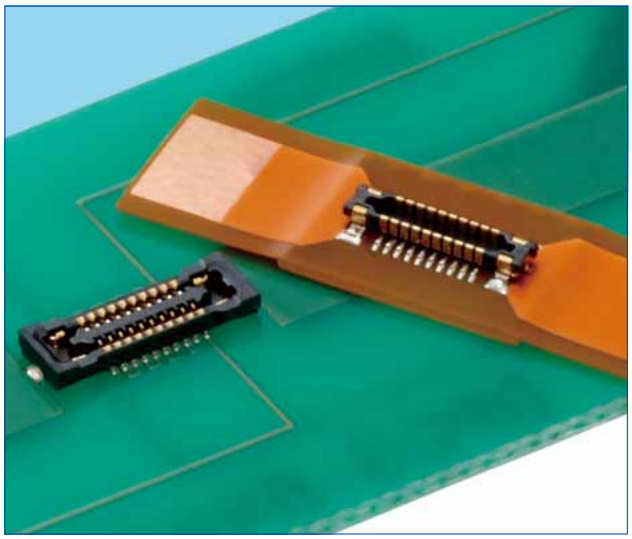

(Supports USB3.0 signal)

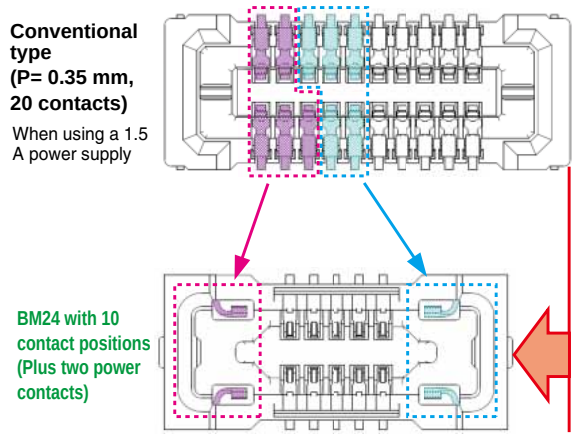

By consolidating the power to two dedicated power pins, the BM24's hybrid power/signal design saves valuable PCB space over conventional signal contact only style connectors.

Fig.1

■Features

1. Rated current : 5A

The compact BM24 Series features a space-saving design with the power contacts rated at 5A, and the signal contact rated at 0.25A. (Fig.1)

2. High contact reliability

A 2-point contact structure for both power and signal contacts provides high contact reliability. (Fig.3)

3. Enhanced mating process

A guide rib ensures self-alignment during mating, with an alignment range of 0.3mm. In addition, a tactile click is generated upon mating completion, preventing incomplete mating and enhancing mating operability.

4. Supports USB3.0/3.1 transmission

The signal contact supports USB3.0/3.1 signals.

Area for vacuum pick up

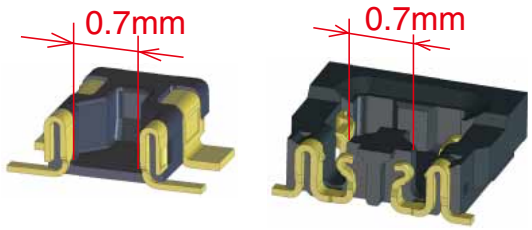

Fig.2

Cross-sectional view of mated contacts

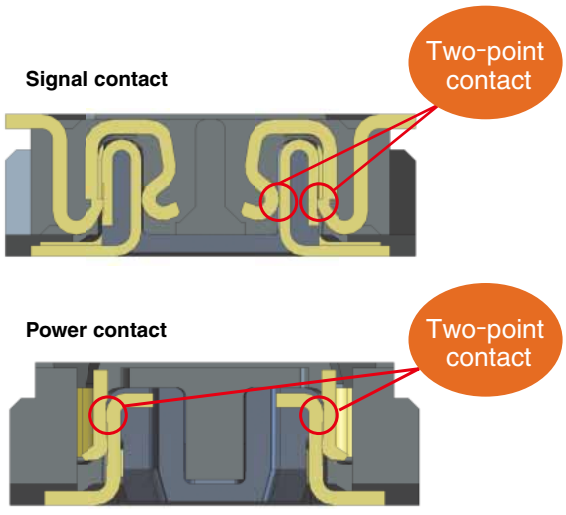

Fig.3

Jul.1.2022 Copyright 2022 HIROSE ELECTRIC CO., LTD. All Rights Reserved.

■Product Specifications

Ratings	Rated current	Power contact : 5A Signal contact : 0.25A(Note 1)	Operating temperature range	-40 to 85°C (Note 2)	Storage temperature range	-10 to 60℃ (Note 3)
	Rated voltage	30V AC/DC	Operating humidity range	20 to 80%	Storage humidity range	40 to 70% (Note 3)

Items	Specifications	Conditions
1. Insulation resistance	100MΩ min.	Measured at 100V DC
2. Withstanding voltage	No flashover or dielectric breakdown	150V AC for one minute
3. Contact resistance	Signal contact : 100mΩ max. Power contact : 15mΩ max.	Measured at 20mV AC, 1kHz, and 1mA
4. Vibration	No electrical discontinuity for more than 1μs.	Frequency : 10 to 55 Hz ; half amplitude : 0.75mm, in 3 axis directions for 2 hours
5. Humidity	Contact resistance : Signal contact : 100mΩ max. Power contact : 15mΩ max. Insulation resistance : 50MΩ min.	96 hours at a temperature of 40 ±2℃ and a humidity range from 90 to 95%
6. Temperature cycle	Contact resistance : Signal contact : 100mΩ max. Power contact : 15mΩ max. Insulation resistance : 100MΩ min.	(-55℃ for 30 minutes → 5 to 35°C for 10 minutes → 85°C for 30 minutes → 5 to 35°C for 10 minutes) in 5 cycles
7. Durability	Contact resistance : Signal contact : 100mΩ max. Power contact : 15mΩ max.	10 mating cycles
8. Solder heat resistance	No dissolution or melting of the resin that will affect the performance.	Reflow : with recommended temperature profile ; Hand soldering at soldering iron temperature of 350℃ for 3 seconds max.

Note 1 : The total current capacity for connectors with 40 or more signal contacts is 10A for all contacts.
Note 2 : Includes temperature rise caused by current flow.
Note 3 : Storage refers to long-term-storage of unused items before they are mounted on the PCB.
Operating temperature / humidity range applies to the state of temporary storage such as non-powered after mounting on the PCB, and during transportation, etc.

■Materials / Finish

Product	Part	Materials	Finish	UL Regulation
Receptacle Header	Insulator	LCP	Black	UL94V-0
	Signal contact	Phosphor bronze	Gold plated	———
	Power contact	Copper alloy	Gold plated	———

■Product Number Structure

Refer to the chart below when determining the product specifications from the product number.
Please select from the product numbers listed in this catalog when placing orders.

●Receptacle / Header

BM 24 – ＊ DS / 2 – 0.35 V (51)
❶ ❷ ❸ ❹ ❺ ❻ ❼ ❽

❶ Series Name : BM	❺ Number of Power Contacts : 2
❷ Series No. : 24	❻ Contact Pitch : 0.35mm
❸ Number of Signal Contacts : 10, 20, 24, 30, 40, 50	❼ Termination type V : Straight SMT
❹ Connector type DS : Receptacle DP : Header	❽ Gold plated specification and packaging status (51) : Gold plate thickness 0.05μm Embossed tape packaging (10,000 pcs/reel)

Jul.1.2022 Copyright 2022 HIROSE ELECTRIC CO., LTD. All Rights Reserved.

Jul.1.2022 Copyright 2022 HIROSE ELECTRIC CO., LTD. All Rights Reserved.

■Receptacle

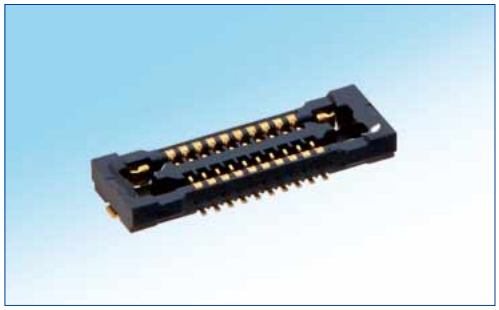

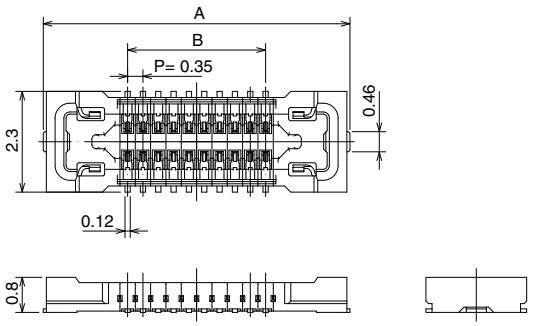

◆Recommended PCB layout

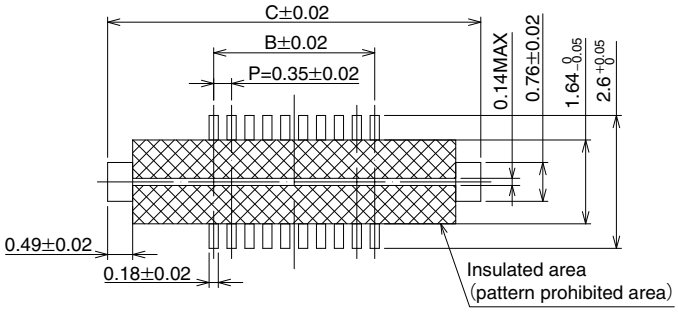

◆Recommended metal mask dimensions (mask thickness : 100 µm)

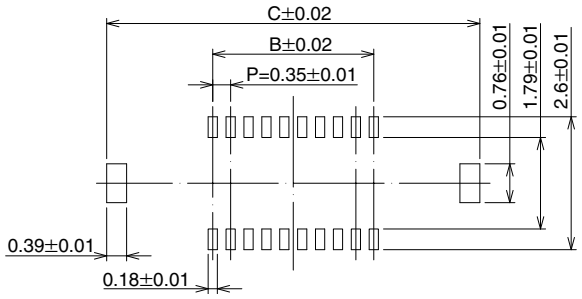

Unit : mm

Part No.	HRS No.	No. of Contacts	A	B	C
BM24-10DS/2-0.35V(51)	677-2002-1 51	10	5.25	1.4	5.55
BM24-20DS/2-0.35V(51)	677-2004-7 51	20	7	3.15	7.3
BM24-24DS/2-0.35V(51)	677-2006-2 51	24	7.7	3.85	8
BM24-30DS/2-0.35V(51)	677-2008-8 51	30	8.75	4.9	9.05
BM24-40DS/2-0.35V(51)	677-2010-0 51	40	10.5	6.65	10.8
BM24-50DS/2-0.35V(51)	677-2014-0 51	50	12.25	8.4	12.55

Note 1 : Please order the embossed tape packaging product per reel.
Note 2 : This connector has no polarity.

■Header

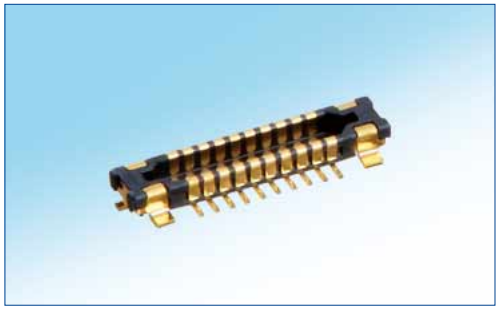

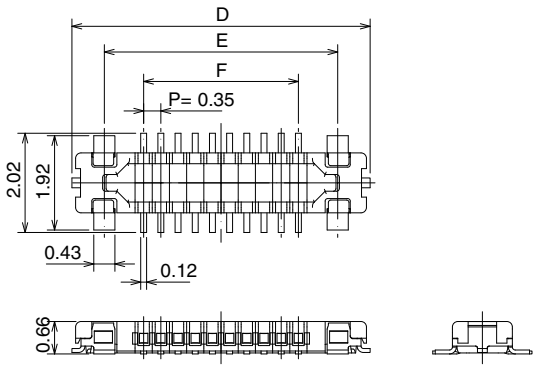

◆Recommended PCB layout

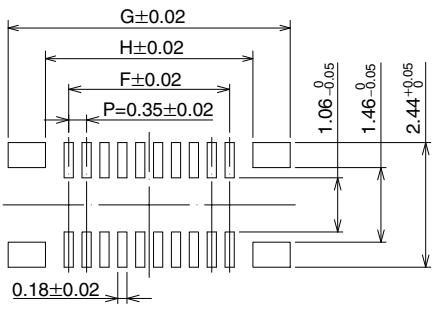

◆Recommended metal mask dimensions (mask thickness : 100 µm)

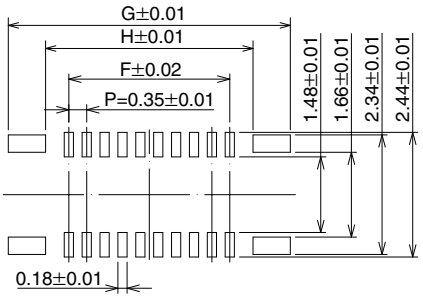

Unit : mm

Part No.	HRS No.	No. of Contacts	D	E	F	G	H
BM24-10DP/2-0.35V(51)	677-2001-9 51	10	4.32	3	1.4	3.73	2.27
BM24-20DP/2-0.35V(51)	677-2003-4 51	20	6.07	4.75	3.15	5.48	4.02
BM24-24DP/2-0.35V(51)	677-2005-0 51	24	6.77	5.45	3.85	6.18	4.72
BM24-30DP/2-0.35V(51)	677-2007-5 51	30	7.82	6.5	4.9	7.23	5.77
BM24-40DP/2-0.35V(51)	677-2009-0 51	40	9.57	8.25	6.65	8.98	7.52
BM24-50DP/2-0.35V(51)	677-2013-0 51	50	11.32	10	8.4	10.73	9.27

Note 1 : Please order the embossed tape packaging product per reel.
Note 2 : This connector has no polarity.

◆Embossed Tape Dimensions (complies with JIS C 0806)

●Receptacle

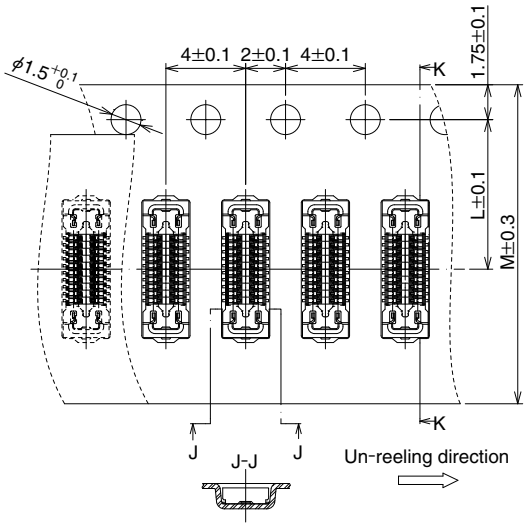

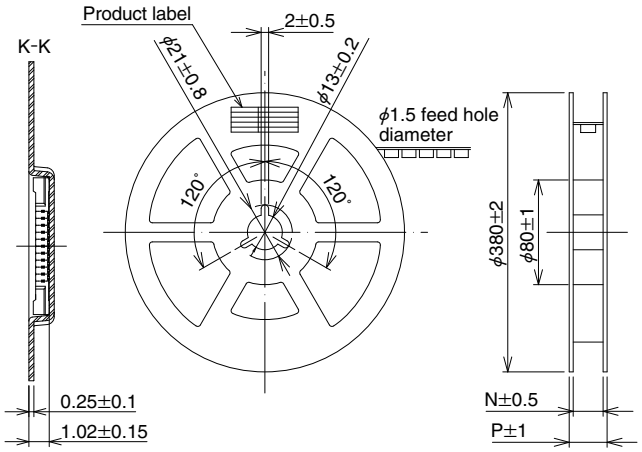

●Reel dimensions

Unit : mm

Part No.	No. of Contacts	L	M	N	P
BM24-10DS/2-0.35V(51)	10	7.5	16	17.5	21.5
BM24-20DS/2-0.35V(51)	20				
BM24-24DS/2-0.35V(51)	24				
BM24-30DS/2-0.35V(51)	30	11.5	24	25.5	29.5
BM24-40DS/2-0.35V(51)	40				
BM24-50DS/2-0.35V(51)	50				

●Header

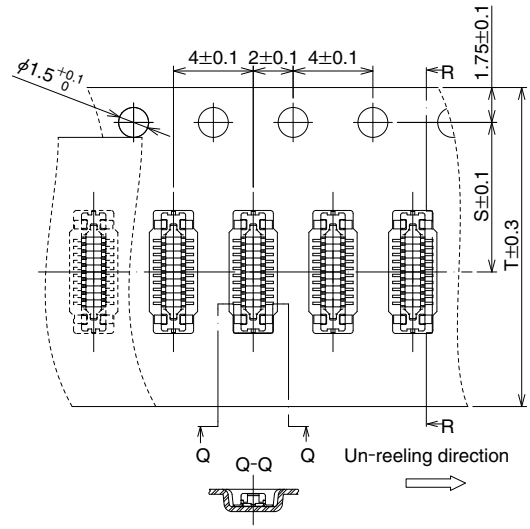

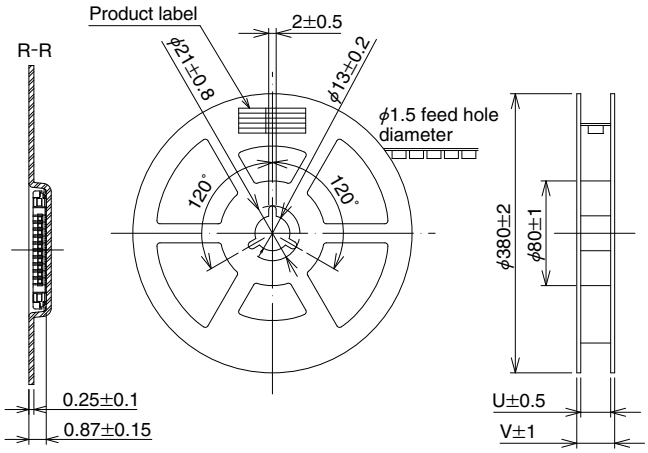

●Reel dimensions

Unit : mm

Part No.	No. of Contacts	S	T	U	V
BM24-10DP/2-0.35V(51)	10	7.5	16	17.5	21.5
BM24-20DP/2-0.35V(51)	20				
BM24-24DP/2-0.35V(51)	24				
BM24-30DP/2-0.35V(51)	30	11.5	24	25.5	29.5
BM24-40DP/2-0.35V(51)	40				
BM24-50DP/2-0.35V(51)	50				

Jul.1.2022 Copyright 2022 HIROSE ELECTRIC CO., LTD. All Rights Reserved.

◆Precautions

1.Recommended solder temperature profile	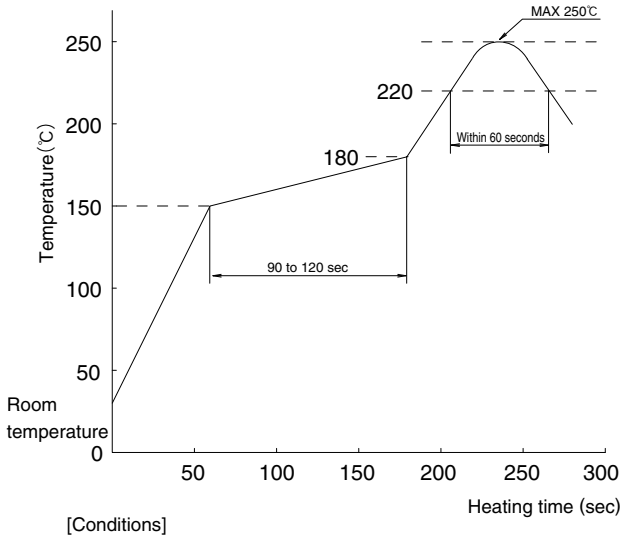 [Conditions] 1. Peak temperature : Maximum of 250℃ 2. Heat section : 220℃ min., within 60 seconds 3. Preheat section : 150 to 180℃, 90 to 120 seconds 4. Number of reflow cycles : Maximum of 2 cycles Note 1 : The temperature refers to the surface temperature of the PCB in the area of the connector lead. Note 2 : When you use nitrogen reflow, please mount the product with the oxygen concentration at a minimum of 1,000 ppm. Please contact us if the concentration is below 1,000 ppm.
2. Recommended manual soldering conditions	Soldering iron temperature : 340 ± 10°C ; Soldering time: within 3 seconds
3. Recommended stencil thickness and open area ratio to PCB pattern area	Thickness : 0.1mm Aperture ratio : 80% on the DS side ; 70% on the DP side
4. Board warpage	A maximum of 0.02mm at the center of the connector relative to each end of the connector.
5. Cleaning conditions	Cleaning is not recommended. If you clean this product, please evaluate its performance before using it. (Cleaning may impair the mating/unmating properties and lower resistance to environmental factors)
6. Precautions	●Care should be taken when mating/unmating the connector when it is not mounted on the PCB. This could cause damage or deformation of the contacts. ●Avoid supporting the PCB only with the connectors. Support it by other means such as bolts, screws, posts, etc. ●Care should be taken that excessive prying mating/unmating could cause damage. ●In the case of hand soldering, please do not apply any flux, which could cause flux wicking. ●This product may have slight color differences due to production lot variability, but this does not the performance. ●Please refer to the next page for precautions regarding mating/unmating. ●Because the product can disengage if dropped (or other impact), and by FPC routing, it is advised to secure the mated connectors to the board with housings and cushioning materials. ●Caution! Do not use the connector in non-recommended conditions (i.e., rated current, rated voltage, PCB design and operating environment, etc.). Such usage could lead to material outgassing, ignition, or short-circuit, etc. Refer to the specifications and the guidelines for board pattern dimensions, board cautions, and connector treatment. Pleasae contact Hirose if using the connector under conditions other than those described in the specifications and the guidelines is being considered.

Jul.1.2022 Copyright 2022 HIROSE ELECTRIC CO., LTD. All Rights Reserved.

●Handling Precautions when Mating Connectors

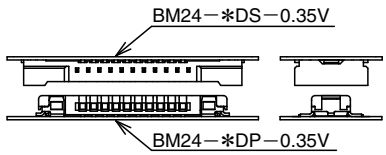	
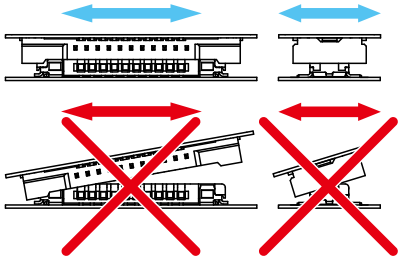	Do not apply excessive force while positioning the connector for mating. Too much force will cause damage/shaving of the housing material, and may lead to a failure in contact resistance and other issues.
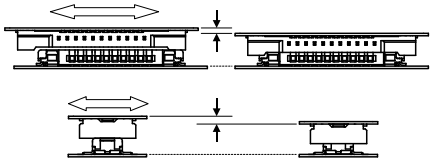	Once the positioning for correct mating is obtained, mating height drops down one stage. There is no movement in the horizontal direction. Mating should occur at this stage, while taking care that there is no horizontal movement.

●Handling Precautions when Un-mating Connectors

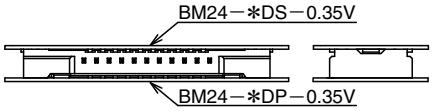	
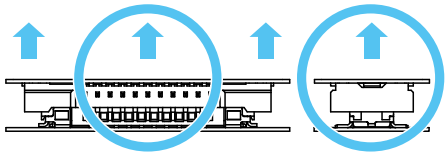	Be sure to unmate the connectors in a straight line direction.
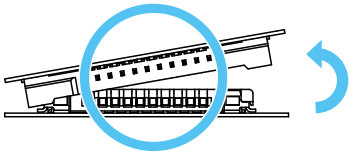 Pitch orientation Correct	If you are unable to unmate a cnnector in straight line direction due to a handling issue, pull it out in an oblique direction as shown in the figure on the left. However, the connector could be broken if there is not enough support on the FPC. Please account for this during prototyping.
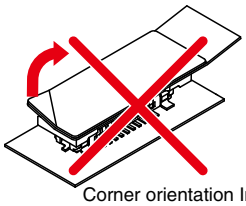 Corner orientation Incorrect	Unmating a connector by a corner, as shown in the figure to the left, could damage the connector and contacts. Never disconnect connectors using a corner.
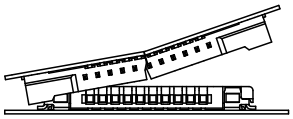	Make sure that the FPC has a stiffener of sufficient strength. If the stiffener is not strong enough, the connector could be broken, as shown in the figure on the left. It is advised to test the FPCs strength by repeated mating/unmating cycles. We recommend the use of a glass epoxy material with a minimum thickness of 0.3mm, or a stainless steel material with a minimum thickness of 0.2mm.

Jul.1.2022 Copyright 2022 HIROSE ELECTRIC CO., LTD. All Rights Reserved.

HIROSE ELECTRIC CO.,LTD.
2-6-3,Nakagawa Chuoh,Tsuzuki-Ku,Yokohama-Shi 224-8540,JAPAN
https://www.hirose.com/

The characteristics and the specifications contained herein are for reference purpose. Please refer to the latest customer drawings prior to use.
The contents of this catalog are current as of date of 12/2021. Contents are subject to change without notice for the purpose of improvements.