Honeywell

Interactive Catalog Supplements Catalog PDFs

If you need detailed product information, or help choosing the right product for your application, see our Interactive Catalog. Use the Interactive Catalog to access the most complete and up-to-date information available.

The Interactive Catalog provides an extensive collection of product specifications, application data, and technical literature that can be searched based on criteria you select.

This PDF catalog information was published in November 2000.



Click this icon to try the Interactive Catalog.

Sensing and Control
Honeywell Inc.
11 West Spring Street
Freeport, IL 61032

www.honeywell.com/sensing

Manual Switches
Sealed Toggle Switches

NT Series

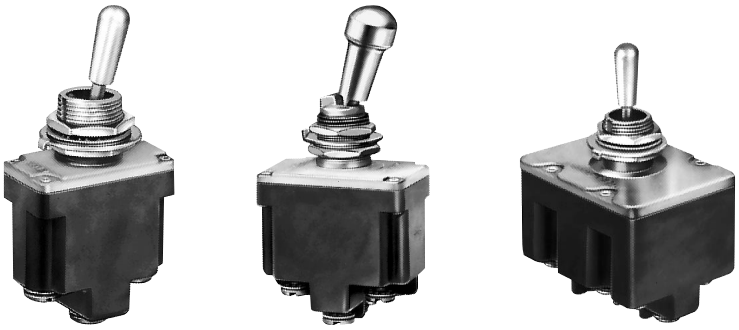

CONSTRUCTION

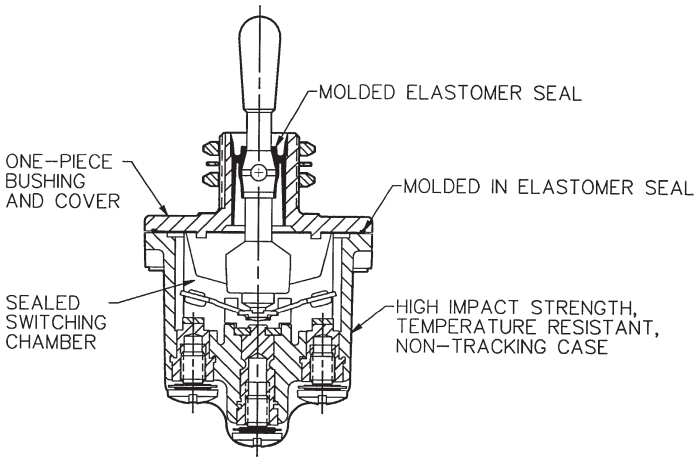

UL AND CSA ELECTRICAL RATINGS

Rating Code*	Electrical Rating
L192	10 amps, 125, 250, 277 VAC; ¼ Hp, 125 VAC; ½ Hp, 250, 277 VAC; 3 amps, 125 VAC ''L''
L191	15 amps, 125, 250, 277 VAC; ½ Hp, 125 VAC; 1 Hp, 250, 277 VAC; 5 amps, 125 VAC ''L''

* Referred to in order guides.

ELECTRICAL RATINGS

In Amperes

Elect. Rating Code	28 Volts DC			115 VDC	250 VDC	115 Volts AC 60 & 400 Hz			230 VAC
	Ind.	Res.	Lamp	Res.	Res.	Ind.	Res.	Lamp	Res.
1	12	20	5	0.75	0.5	10	15	3	6
2	10	15	4	0.75	0.5	7	15	2	6
3	15	20	7	0.75	0.5	15	15	4	6
4	10	18	5	0.75	0.5	8	11	2	6
5	12	20	5	0.75	0.5	15	15	4	6
6	10	18	4	0.75	0.5	8	11	2	6

Application Note: Honeywell MICRO SWITCH does *not* recommend the use of silver cadmium oxide switch contacts in non-arcing loads. Non-arcing loads are generally loads less than 12 volts and/or 0.5 amp. NT switches use silver cadmium oxide contacts. For other options, contact the MICRO SWITCH Application Center at 1-800-537-6945.

FEATURES

- Completely sealed switching chamber
- Step-design case provides added space between terminals to help prevent shorting
- 1, 2 or 4-pole circuitry
- Standard and pull to unlock levers.
- 2 or 3 positions, maintained and momentary action
- Spring-loaded actuating mechanism provides excellent tactile feedback
- High impact strength, non-tracking case enhances electrical stability
- Temperature range: –40 to 71°C (–40 to 160°F)
- UL recognized, File E12252, Vol. 1, Section 44
- CSA certified, File LR4442
- CE approved

GENERAL INFORMATION

MICRO SWITCH NT Series toggle switches meet severe environment application needs for a rugged, cost-effective toggle switch. Quality construction features include a molded-in elastomer seal between the toggle lever and bushing, and between the cover and case. In addition, the terminal inserts are molded into the high impact strength thermoplastic case.

Complete sealing of the switching chamber enables NT toggles to comply with UL 508, paragraph 13.3 hosedown test. These switches can be used where panels are subjected to periodic splash and washdowns, such as are common to food and beverage equipment. They will also withstand exposure to heavy accumulations of early morning dew that may condense on the control panel in cabs of vehicles left outdoors overnight.

PULL-TO-UNLOCK LEVERS

Pull-to-unlock toggle levers prevent accidental toggle movement. The knobbed toggle lever must be pulled out approximately .09 in. (2,3 mm) to change positions. Thirteen different locking configurations are available. This lever style also has a non-glare matte nickel finish.

NT 2-POSITION ORDER GUIDE

No. of Poles	Circuits Made With Toggle At: Keyway Position	Opposite Keyway	UL Rating Code	Elect. Rating Code	Standard Lever Termination Style Screw	Solder	Q-C	Pull-To-Unlock Lever (Add suffix to Standard Lever Listing)
1	OFF	2-3	L191	1	1NT1-2	11NT1-2	1NT91-2	D, F, G
	1-2	2-3	L191	1	1NT1-3	11NT1-3	1NT91-3	D, F, G
	OFF*	2-3	L192	2	1NT1-4	11NT1-4	1NT91-4	F
	1-2*	OFF	L192	2	1NT1-6	11NT1-6	1NT91-6	F
	1-2*	2-3	L192	2	1NT1-8	11NT1-8	1NT91-8	F
2	OFF	2-3, 5-6	L191	3	2NT1-2	12NT1-2	2NT91-2	D, F, G
	1-2, 4-5	2-3, 5-6	L191	3	2NT1-3	12NT1-3	2NT91-3	F
	OFF*	2-3, 5-6	L192	4	2NT1-4	12NT1-4	2NT91-4	F
	1-2, 4-5*	OFF	L192	4	2NT1-6	12NT1-6	2NT91-6	D, F, G
	1-2, 4-5*	2-3, 5-6	L192	4	2NT1-8	12NT1-8	2NT91-8	F
4	OFF	2-3, 5-6, 8-9, 11-12	L191	5	4NT1-2	14NT1-2	4NT91-2	D, F, G
	1-2, 4-5, 7-8, 10-11	2-3, 5-6, 8-9, 11-12	L191	5	4NT1-3	14NT1-3	4NT91-3	F
	OFF*	2-3, 5-6, 8-9, 11-12	L192	6	4NT1-4	14NT1-4	4NT91-4	F
	1-2, 4-5, 7-8, 10-11*	OFF	L192	6	4NT1-6	14NT1-6	4NT91-6	D, F, G
	1-2, 4-5, 7-8, 10-11*	2-3, 5-6, 8-9, 11-12	L192	6	4NT1-8	14NT1-8	4NT91-8	F

NT 3-POSITION ORDER GUIDE

No. of Poles	Circuits Made With Toggle At: Keyway Position	Center Position	Opposite Keyway	UL Rating Code	Elect. Rating Code	Standard Lever Termination Style Screw	Solder	Q-C	Pull-To-Unlock Lever (Add suffix to Standard Lever Listing)
1	1-2	OFF	2-3	L191	1	1NT1-1	11NT1-1	1NT91-1	ALL TYPES
	1-2*	OFF	2-3	L192	2	1NT1-5	11NT1-5	1NT91-5	E, F, K, L, M, N
	1-2*	OFF	2-3*	L192	2	1NT1-7	11NT1-7	1NT91-7	E, L, N
	NONE**	OFF	2-3	L191	1	1NT1-21	11NT1-21	1NT91-21	E, F, K, M
	NONE**	1-2	2-3	L191	1	1NT1-31	11NT1-31	1NT91-31	E, F, K, M
	NONE**	1-2	2-3*	L192	2	1NT1-51	11NT1-51	1NT91-51	E
	1-2*	OFF	NONE**	L192	2	1NT1-61	11NT1-61	1NT91-61	E
2	1-2, 4-5	OFF	2-3, 5-6	L191	3	2NT1-1	12NT1-1	2NT91-1	ALL TYPES
	1-2, 4-5*	OFF	2-3, 5-6	L192	4	2NT1-5	12NT1-5	2NT91-5	E, F, K, L, M, N
	1-2, 4-5*	OFF	2-3, 5-6*	L192	4	2NT1-7	12NT1-7	2NT91-7	E, L, N
	NONE*	OFF	2-3, 5-6	L191	3	2NT1-21	12NT1-21	2NT91-21	E, F, K, M
	NONE**	1-2, 4-5	2-3, 5-6	L191	3	2NT1-31	12NT1-31	2NT91-31	E, F, K, M
	NONE**	1-2, 4-5	2-3, 5-6*	L192	4	2NT1-51	12NT1-51	2NT91-51	E
	1-2, 4-5*	OFF	NONE**	L192	4	2NT1-61	12NT1-61	2NT91-61	E
	1-2, 4-5	2-3, 4-5	2-3, 5-6	L191	3	2NT1-12	12NT1-12	2NT91-12	ALL TYPES
	1-2, 4-5	1-2, 5-6	2-3, 5-6	L191	3	2NT1-10	12NT1-10	2NT91-10	ALL TYPES
	1-2, 4-5*	1-2, 5-6	2-3, 5-6	L192	4	2NT1-50	12NT1-50	2NT91-50	L, F, K, L, M, N
	1-2, 4-5*	1-2, 5-6	2-3, 5-6*	L192	4	2NT1-70	12NT1-70	2NT91-70	E, L, N
4	1-2, 4-5, 7-8, 10-11	OFF	2-3, 5-6, 8-9, 11-12	L191	5	4NT1-1	14NT1-1	4NT91-1	ALL TYPES
	1-2, 4-5, 7-8, 10-11*	OFF	2-3, 5-6, 8-9, 11-12	L192	6	4NT1-5	14NT1-5	4NT91-5	E, F, K, L, M, N
	1-2, 4-5, 7-8, 10-11*	OFF	2-3, 5-6, 8-9, 11-12*	L192	6	4NT1-7	14NT1-7	4NT91-7	E, L, N
	NONE*	OFF	2-3, 5-6, 8-9, 11-12	L191	5	4NT1-21	14NT1-21	4NT91-21	E, F, K, M
	NONE**	1-2, 4-5, 7-8, 10-11	2-3, 5-6, 8-9, 11-12	L191	5	4NT1-31	14NT1-31	4NT91-31	E, F, K, M
	NONE**	1-2, 4-5, 7-8, 10-11	2-3, 5-6, 8-9, 11-12*	L192	6	4NT1-51	14NT1-51	4NT91-51	E
	1-2, 4-5, 7-8, 10-11*	OFF	NONE**	L192	6	4NT1-61	14NT1-61	4NT91-61	E
	1-2, 4-5, 7-8, 10-11	2-3, 4-5, 7-8, 11-12	2-3, 5-6, 8-9, 11-12	L191	5	4NT1-12	14NT1-12	4NT91-12	ALL TYPES
	1-2, 4-5 7-8, 10-11	2-3, 4-5	2-3, 5-6 8-9, 11-12	L191	5	4NT1-10	14NT1-10	4NT91-10	ALL TYPES
	1-2, 4-5, 7-8, 10-11*	2-3, 4-5, 7-8, 11-12	2-3, 5-6, 8-9, 11-12	L192	6	4NT1-50	14NT1-50	4NT91-50	E, F, K, L, M, N
	1-2, 4-5, 7-8, 10-11*	2-3, 4-5	2-3, 5-6, 8-9, 11-12*	L192	6	4NT1-70	14NT1-70	4NT91-70	E, L, N

* These positions are momentary. All others are maintained.
** Toggle lever is blocked from these products. Toggle becomes 2-position, with center being one extreme position.

PULL-TO-UNLOCK OPTION

When ordering pull-to-unlock toggle listings, add the suffix letter shown in the chart below to the standard toggle listing and the MS number. For example, to order a INTI-1 pull-to-unlock toggle switch with the lever locked in the center position, add the letter **E**; i.e., INTI-1**E**.

LOCKING CONFIGURATIONS

A	B	D	E	F	G	H
 Locked In Three Positions	 Locked In Center and Extreme Position (Keyway Side)	 Locked Out Of Center Position	 Locked In Center Position	 Locked In Extreme Position (Opposite Keyway)	 Locked In Extreme Position (Keyway Side)	 Locked Out Of Center And Extreme Position (Keyway Side)

J	K	L	M	N	P
 Locked Out Of Center And Extreme Position (Opposite Keyway)	 Locked In Center And Extreme Position (Opposite Keyway)	 Locked Out Of Extreme Position (Keyway Side)	 Locked Out Of And Into Extreme Position (Opposite Keyway)	 Locked Out Of Extreme Position (Opposite Keyway)	 Locked Out Of And Into Extreme Position (Keyway Side)

MOUNTING DIMENSIONS:

(For reference only)

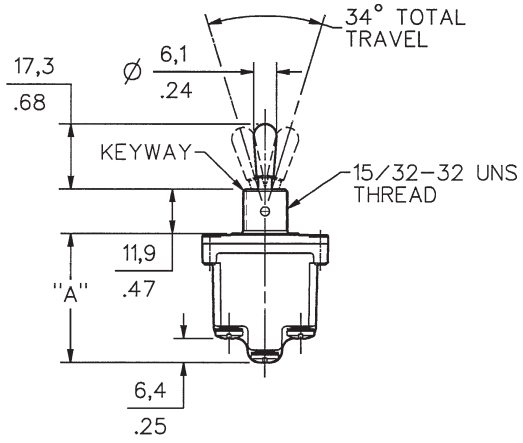

DIM "A"	
1-pole	29,5/1.16
2 & 4-pole	34,4/1.35

Key: 0,0 = mm / 0.00 = inches

Panel cutout

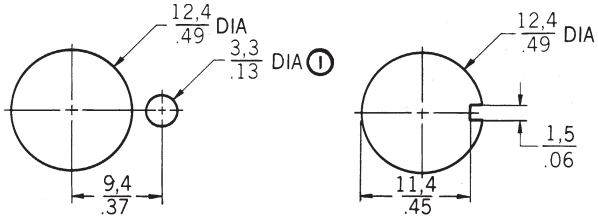

With locking ring — Without locking ring

Note:
① 1,4/.06 MIN DEEP TO ACCOMMODATE LOCKING RING. 15PA87 PANEL SEAL REQUIRES BLIND HOLE TO INSURE SEAL INTEGRITY

NOTES:
1. Pull-to-unlock levers have 10,7/42 dia. knob
2. Locking ring, lockwasher, 2 hexnuts and terminal screws are furnished unassembled.

Solder Terminals

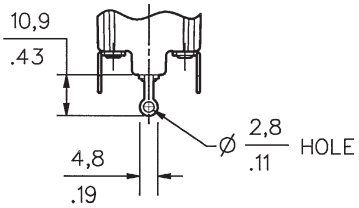

Quick Connect Terminals

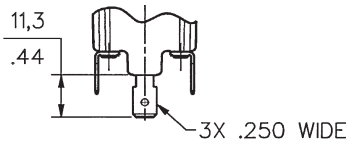

Bushing mounting torque is 10–15 in./lbs.
Terminal screw mounting torque is 5 in./lbs. max.

Terminal Circuit Identification

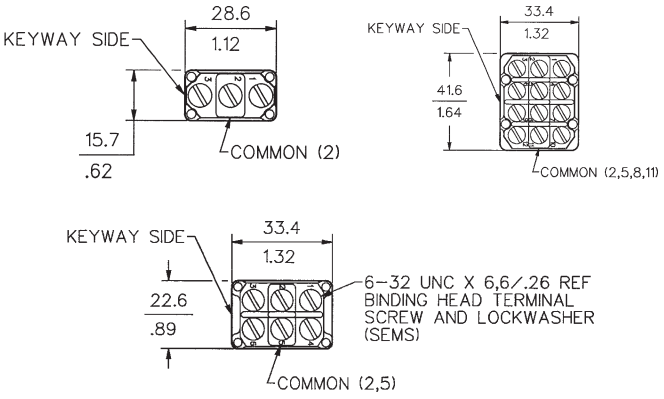

This page intentionally left blank.

Manual Switches

NT Series

Flat Base Sealed Toggles and Rockers



FEATURES

- Sealed switching chamber
- 1 or 2-pole circuitry
- 2 or 3 position maintained and momentary action
- Flat base with quick-connect terminals – mating connectors are available
- Spring-loaded actuating mechanism provides tactile feedback
- High impact strength, non-tracking case enhances electrical stability
- Temperature range: –40 to 71°C (–40 to 160°F)
- UL Recognized, File E12252, vol. 1, section 44
- CSA Certified, File LR4442
- CE approved

UL AND CSA ELECTRICAL RATINGS

Rating Code*	Electrical Rating
L192	10 amps, 125, 250, 277 VAC; ¼ Hp, 125 VAC; ½ Hp, 250, 277 VAC; 3 amps, 125 VAC "L"
L191	15 amps, 125, 250, 277 VAC; ½ Hp, 125 VAC; 1 Hp, 250, 277 VAC; 5 amps, 125 VAC "L"

ELECTRICAL RATINGS

In Amperes

Rating Code	28 Volts DC			115 VDC	250 VDC	115 Volts AC 60 & 400 Hz			230 VAC
	Ind.	Res.	Lamp	Res.	Res.	Ind.	Res.	Lamp	Res.
1	12	20	5	0.75	0.5	10	15	3	6
2	10	15	4	0.75	0.5	7	15	2	6
3	15	20	7	0.75	0.5	15	15	4	6
4	10	18	5	0.75	0.5	8	11	2	6

Application Note: Honeywell MICRO SWITCH does *not* recommend the use of silver cadmium oxide switch contacts in non-arcing loads. Non-arcing loads are generally loads less than 12 volts and/or 0.5 amp. NT switches use silver cadmium oxide contacts. For other options, contact the MICRO SWITCH Application Center at 1-800-537-6945.

GENERAL INFORMATION

MICRO SWITCH NT Series toggle switches are designed to meet severe environment application needs for rugged, cost-effective manual switches. These flat base style products are identical to the stepped base style in construction and features.

The flat base allows for PC board or connector use for easy wiring/connection. The flat base NT toggle switches are provided with quick-connect (spade) termination. Mating connectors are available.

TERMINAL CIRCUIT IDENTIFICATION

Terminal identifications are referenced in the order guides to indicate which circuits are made in each toggle position (e.g. **"1-2"** refers to circuit closure through terminals **1** and **2**).

Manual Switches
Flat Base Sealed Toggles

NT 2-POSITION ORDER GUIDE

No. of Poles	Circuits Made At: Keyway Position	Circuits Made At: Opposite Keyway	UL Rating Code	Electrical Rating Code	Catalog Listing Toggle Q-C
1	OFF	2-3	L191	1	31NT91-2
	1-2	2-3	L191	1	31NT91-3
	OFF**	2-3	L192	2	31NT91-4
	1-2**	OFF	L192	2	31NT91-6
	1-2**	2-3	L192	2	31NT91-8
2	OFF	2-3, 5-6	L191	3	32NT91-2
	1-2, 4-5	2-3, 5-6	L191	3	32NT91-3
	OFF**	2-3, 4-6	L192	4	32NT91-4
	1-2, 4-5**	OFF	L192	4	32NT91-6
	1-2, 4-5**	2-3, 4-6	L192	4	32NT91-8

NT 3-POSITION ORDER GUIDE

No. of Poles	Circuits Made At: Keyway Position	Circuits Made At: Center Position	Circuits Made At: Opposite Keyway	UL Rating Code	Electrical Rating Code	Catalog Listing Toggle Q-C
1	1-2	OFF	2-3	L191	1	31NT91-1
	1-2**	OFF	2-3	L192	2	31NT91-5
	1-2**	OFF	2-3**	L192	2	31NT91-7
	NONE***	OFF	2-3	L191	1	31NT91-21
	NONE***	1-2	2-3	L191	1	31NT91-31
	NONE***	1-2	2-3**	L192	2	31NT91-51
	1-2**	OFF	NONE***	L192	2	31NT91-61
2	1-2, 4-5	OFF	2-3, 5-6	L191	3	32NT91-1
	1-2, 4-5**	OFF	2-3, 5-6	L192	4	32NT91-5
	1-2, 4-5**	OFF	2-3, 5-6**	L192	4	32NT91-7
	NONE***	OFF	2-3, 5-6	L191	3	32NT91-21
	NONE***	1-2, 4-5	2-3, 5-6	L191	3	32NT91-31
	NONE***	1-2, 4-5	2-3, 5-6**	L192	4	32NT91-51
	1-2, 4-5**	OFF	NONE***	L192	4	32NT91-61
	1-2, 4-5	2-3, 4-5	2-3, 5-6	L191	3	32NT91-12
	1-2, 4-5	1-2, 5-6	2-3, 5-6	L191	3	32NT91-10
	1-2, 4-5**	1-2, 5-6	2-3, 5-6	L192	4	32NT91-50
	1-2, 4-5**	1-2, 5-6	2-3, 5-6**	L192	4	32NT91-70

** These positions are momentary. All others are maintained.
*** Toggle lever is blocked from these positions. Toggle becomes 2-position, with center being one extreme position.

MATING CONNECTORS ORDER GUIDE

Description	Catalog Listing
2-pole connector	19PA168-NT
1-pole connector, same package size as 2-pole connector	19PA169-NT

LOCKING CONFIGURATIONS

A	B	D	E	F	G	H
						
Locked In Three Positions	Locked In Center and Extreme Position (Keyway Side)	Locked Out Of Center Position	Locked In Center Position	Locked In Extreme Position (Opposite Keyway)	Locked In Extreme Position (Keyway Side)	Locked Out Of Center And Extreme Position (Keyway Side)

J	K	L	M	N	P
					
Locked Out Of Center And Extreme Position (Opposite Keyway)	Locked In Center And Extreme Position (Opposite Keyway)	Locked Out Of Extreme Position (Keyway Side)	Locked Out Of And Into Extreme Position (Opposite Keyway)	Locked Out Of Extreme Position (Opposite Keyway)	Locked Out Of And Into Extreme Position (Keyway Side)

This page intentionally left blank.

MOUNTING DIMENSIONS (For reference only)

Toggle Switches

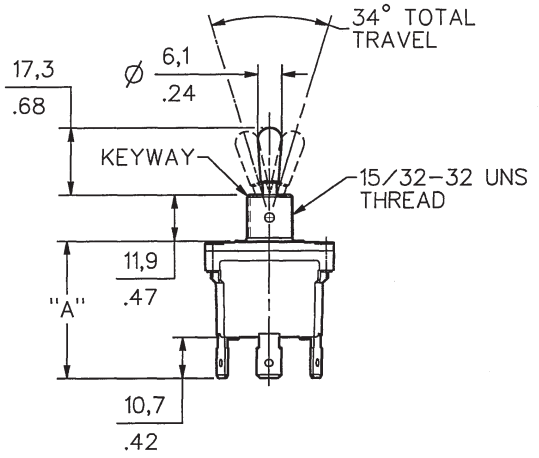

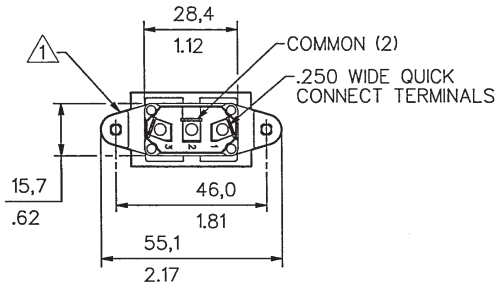

1 IDENTIFICATION LUG SIDE

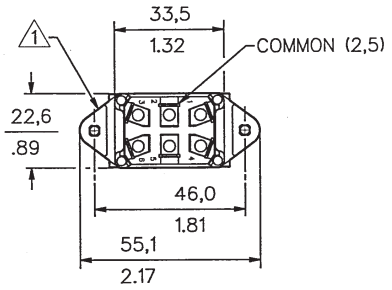

1 IDENTIFICATION LUG SIDE

Bushing mounting torque is 10–15 in./lbs.

Toggle/Rockers