GlobTek, Inc. www.globtek.com 186 Veterans Drive, Northvale, NJ 07647 Tel. (201) 784-1000 Fax (201) 784-0111	Drawing Title: PLUG ADAPTER;I/P;2.1X5.5MM O/P;3.5MM PLUG	
	Model No. Low voltage cable	
	Part No./Ordering No. P00-LCP	Rev A1

In Addition to GlobTek Inc.'s renewed ISO9001:2008 - Quality Management System Certification, GlobTek Inc. is now certified to:

ISO13485:2003 - Medical Devices Quality Management System Certification
ISO14001:2004 - Environmental Management System Certification

ISO Certificates are available online at http://www.globtek.com/iso-certificates/

The acceptance of this specification and use of the product described in this document indicates the acceptance and binding of the customer to Globtek TERMS AND CONDITIONS (attached to the end of this document), which supersede all other agreements, terms, and conditions (http://en.globtek.com/terms-and-conditions/).
Prop 65 Statement:https://en.globtek.com/prop-65-statement.pdf

Footnote:

GlobTek Inc. will not be liable for the safety and performance of these power supplies if unauthorized access and repair occurs. End user should consult applicable UL, CSA or EN standards for proper installation instruction.

Limitation of Use:

GlobTek products are intended for use with commercial, medical, and/or industrial equipment only. GlobTek product are not authorized for use as mission critical components in life support hazardous environment, nuclear or aircraft applications without prior written approval from the CEO of GlobTek Inc.
Contents of this document are subject to change without prior notice.

Customer Approval of Specification:

Please approve, sign and send back to GlobTek so we can complete order processing.
A delay in receipt of this form will delay delivery schedule.

Company Name:	Customer P/N:
Quote Number:	Date:
Authorized Representative Name:	Authorized Representative Signature:

PROPRIETARY INFORMATION
PROPRIETARY OF GLOBTEK, INC. ANY REPRODUCTION, DISCLOSURE OR USE OF THIS DRAWING, IN WHOLE OR IN PART, IS HEREBY PROHIBITED EXCEPT AS SPECIFIED IN WRITING BY GLOBTEK, INC. © GlobTek, Inc. 2012 - 2022
guest /08/22/2022 8:27:30 PM

GlobTek, Inc. www.globtek.com 186 Veterans Drive, Northvale, NJ 07647 Tel. (201) 784-1000 Fax (201) 784-0111	Drawing Title: PLUG ADAPTER;I/P;2.1X5.5MM O/P;3.5MM PLUG	
	Model No. Low voltage cable	
	Part No./Ordering No. P00-LCP	Rev A1

REVISION HISTORY

REV	DESCRIPTION	SUB	DATE	APPROVED
A1	Release to new format	DR	05/23/2020	QA
A	Initial release	DR	02/19/2003	QA

AGENCY ONLINE DOCUMENTS

RoHS/RoHS3 Declaration	https://www.globtek.com/pdf/rohs_cert/01t30000002p96AAAQ
REACH Declaration	https://www.globtek.com/pdf/iso_certificates/REACH.pdf
Conflict Minerals Declaration	https://www.globtek.com/pdf/conflict-minerals.pdf
Prop 65 Statement	https://en.globtek.com/prop-65-statement.pdf

IPXY rating is based on 3rd party testing and customers should check suitability and test system level IPXY rating before ordering.

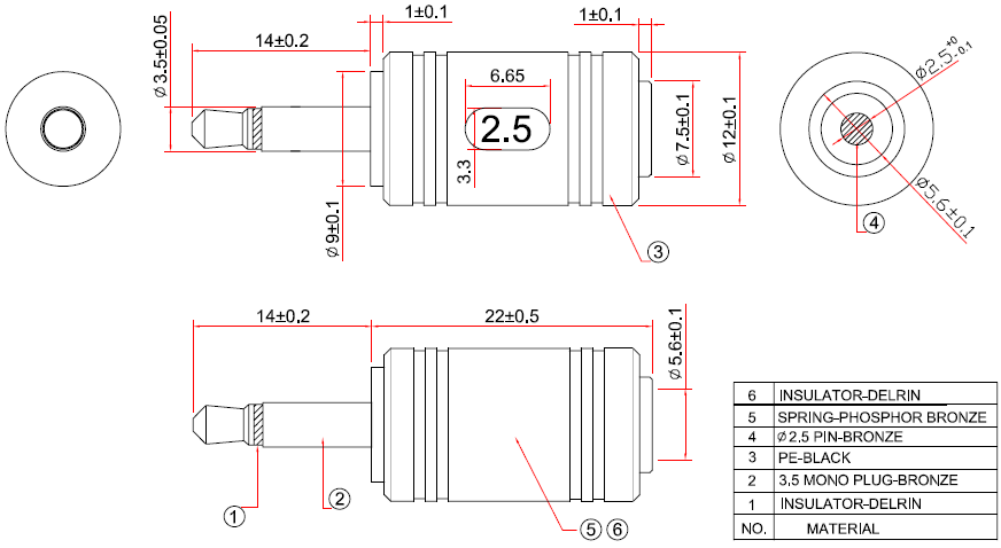

NO.	MATERIAL
6	INSULATOR-DELRIN
5	SPRING-PHOSPHOR BRONZE
4	Ø2.5 PIN-BRONZE
3	PE-BLACK
2	3,5 MONO PLUG-BRONZE
1	INSULATOR-DELRIN

PROPRIETARY INFORMATION
PROPRIETARY OF GLOBTEK, INC. ANY REPRODUCTION, DISCLOSURE OR USE OF THIS DRAWING, IN WHOLE OR IN PART, IS HEREBY PROHIBITED EXCEPT AS SPECIFIED IN WRITING BY GLOBTEK, INC. © GlobTek, Inc. 2012 - 2022
guest /08/22/2022 8:27:30 PM

GlobTek, Inc.
www.globtek.com
186 Veterans Drive,
Northvale, NJ 07647
Tel. (201) 784-1000
Fax (201) 784-0111

Drawing Title: PLUG ADAPTER;I/P;2.1X5.5MM O/P;3.5MM PLUG	
Model No. Low voltage cable	
Part No./Ordering No. P00-LCP	Rev A1

PACKAGING

Packing Spec P/N:	
Box Qty:	1
Gift Box Size (mm):	
Gift Box Color:	White
Master Carton Size (mm):	TBD
Master Carton Cubic Volume (m^3):	0.00
Master GW (Kg):	kg
wt Ea. (Kg):	kg
wt Ea. (Kg):	kg
LABEL SPECS: ,	
PACK SPEC:	

PROPRIETARY INFORMATION
PROPRIETARY OF GLOBTEK, INC. ANY REPRODUCTION, DISCLOSURE OR USE OF THIS DRAWING, IN WHOLE OR IN PART, IS HEREBY PROHIBITED EXCEPT AS SPECIFIED IN WRITING BY GLOBTEK, INC. © GlobTek, Inc. 2012 - 2022
guest /08/22/2022 8:27:30 PM