Data Sheet, V2.0, May 2001

C164CI/SI
C164CL/SL

16-Bit Single-Chip Microcontroller

16bit

Microcontrollers

Infineon technologies

Never stop thinking.

Edition 2001-05

Published by Infineon Technologies AG,
St.-Martin-Strasse 53,
D-81541 München, Germany

© Infineon Technologies AG 2001.
All Rights Reserved.

Attention please!

The information herein is given to describe certain components and shall not be considered as warranted characteristics.

Terms of delivery and rights to technical change reserved.

We hereby disclaim any and all warranties, including but not limited to warranties of non-infringement, regarding circuits, descriptions and charts stated herein.

Infineon Technologies is an approved CECC manufacturer.

Information

For further information on technology, delivery terms and conditions and prices please contact your nearest Infineon Technologies Office in Germany or our Infineon Technologies Representatives worldwide.

Warnings

Due to technical requirements components may contain dangerous substances. For information on the types in question please contact your nearest Infineon Technologies Office.

Infineon Technologies Components may only be used in life-support devices or systems with the express written approval of Infineon Technologies, if a failure of such components can reasonably be expected to cause the failure of that life-support device or system, or to affect the safety or effectiveness of that device or system. Life support devices or systems are intended to be implanted in the human body, or to support and/or maintain and sustain and/or protect human life. If they fail, it is reasonable to assume that the health of the user or other persons may be endangered.

Data Sheet, V2.0, May 2001

C164CI/SI
C164CL/SL

16-Bit Single-Chip Microcontroller

Microcontrollers

Never stop thinking.

Revision History:	**2001-05**		V2.0
Previous Version:	1999-08		
	1998-02	(Preliminary)	
	04.97	(Advance Information)	

Page	**Subjects (major changes since last revision)[1)]**
All	Converted to Infineon layout
1	Operating frequency up to 25 MHz
1 et al.	References to Flash removed
1	Timer Unit with three timers
1, 12, 73	On-chip XRAM described
2	Derivative table updated
10	Supply voltage is 5 V
21	Functionality of reduced CAPCOM6 corrected
22f	Timer description improved
29, 30	Sections “Oscillator Watchdog” and “Power Management” added
37	POCON reset values adjusted
41 to 73	Parameter section reworked

1) These changes refer to the last two versions. Version 1998-02 covers OTP and ROM derivatives, while version 1999-08 ist the most recent one.

Controller Area Network (CAN): License of Robert Bosch GmbH

We Listen to Your Comments

Any information within this document that you feel is wrong, unclear or missing at all? Your feedback will help us to continuously improve the quality of this document. Please send your proposal (including a reference to this document) to:

mcdocu.comments@infineon.com

C164CI/SI, C164CL/SL

- High Performance 16-bit CPU with 4-Stage Pipeline
  - 80 ns Instruction Cycle Time at 25 MHz CPU Clock
  - 400 ns Multiplication (16 × 16 bit), 800 ns Division (32 / 16 bit)
  - Enhanced Boolean Bit Manipulation Facilities
  - Additional Instructions to Support HLL and Operating Systems
  - Register-Based Design with Multiple Variable Register Banks
  - Single-Cycle Context Switching Support
  - 16 MBytes Total Linear Address Space for Code and Data
  - 1024 Bytes On-Chip Special Function Register Area
- 16-Priority-Level Interrupt System with 32 Sources, Sample-Rate down to 40 ns
- 8-Channel Interrupt-Driven Single-Cycle Data Transfer Facilities via Peripheral Event Controller (PEC)
- Clock Generation via on-chip PLL (factors 1:1.5/2/2.5/3/4/5), via prescaler or via direct clock input
- On-Chip Memory Modules
  - 2 KBytes On-Chip Internal RAM (IRAM)
  - 2 KBytes On-Chip Extension RAM (XRAM)
  - up to 64 KBytes On-Chip Program Mask ROM or OTP Memory
- On-Chip Peripheral Modules
  - 8-Channel 10-bit A/D Converter with Programmable Conversion Time down to 7.8 µs
  - 8-Channel General Purpose Capture/Compare Unit (CAPCOM2)
  - Capture/Compare Unit for flexible PWM Signal Generation (CAPCOM6) (3/6 Capture/Compare Channels and 1 Compare Channel)
  - Multi-Functional General Purpose Timer Unit with 3 Timers
  - Two Serial Channels (Synchronous/Asynchronous and High-Speed-Synchronous)
  - On-Chip CAN Interface (Rev. 2.0B active) with 15 Message Objects (Full CAN/Basic CAN)
  - On-Chip Real Time Clock
- Up to 4 MBytes External Address Space for Code and Data
  - Programmable External Bus Characteristics for Different Address Ranges
  - Multiplexed or Demultiplexed External Address/Data Buses with 8-Bit or 16-Bit Data Bus Width
  - Four Optional Programmable Chip-Select Signals
- Idle, Sleep, and Power Down Modes with Flexible Power Management
- Programmable Watchdog Timer and Oscillator Watchdog
- Up to 59 General Purpose I/O Lines, partly with Selectable Input Thresholds and Hysteresis

- Supported by a Large Range of Development Tools like C-Compilers, Macro-Assembler Packages, Emulators, Evaluation Boards, HLL-Debuggers, Simulators, Logic Analyzer Disassemblers, Programming Boards
- On-Chip Bootstrap Loader
- 80-Pin MQFP Package, 0.65 mm pitch

This document describes several derivatives of the C164 group. **Table 1** enumerates these derivatives and summarizes the differences. As this document refers to all of these derivatives, some descriptions may not apply to a specific product.

Table 1 C164CI Derivative Synopsis

Derivative[1)]	Program Memory	CAPCOM6	CAN Interf.	Operating Frequency
SAK-C164CI-8R[25]M SAF-C164CI-8R[25]M	64 KByte ROM	Full function	CAN1	20 MHz, [25 MHz]
SAK-C164SI-8R[25]M SAF-C164SI-8R[25]M	64 KByte ROM	Full function	---	20 MHz, [25 MHz]
SAK-C164CL-8R[25]M SAF-C164CL-8R[25]M	64 KByte ROM	Reduced fct.	CAN1	20 MHz, [25 MHz]
SAK-C164SL-8R[25]M SAF-C164SL-8R[25]M	64 KByte ROM	Reduced fct.	---	20 MHz, [25 MHz]
SAK-C164CL-6R[25]M SAF-C164CL-6R[25]M	48 KByte ROM	Reduced fct.	CAN1	20 MHz, [25 MHz]
SAK-C164SL-6R[25]M SAF-C164SL-6R[25]M	48 KByte ROM	Reduced fct.	---	20 MHz, [25 MHz]
SAK-C164CI-L[25]M SAF-C164CI-L[25]M	---	Full function	CAN1	20 MHz, [25 MHz]
SAK-C164CI-8EM SAF-C164CI-8EM	64 KByte OTP	Full function	CAN1	20 MHz

1) This Data Sheet is valid for ROM(less) devices starting with and including design step AB, and for OTP devices starting with and including design step DA.

For simplicity all versions are referred to by the term **C164CI** throughout this document.

Ordering Information

The ordering code for Infineon microcontrollers provides an exact reference to the required product. This ordering code identifies:

- the derivative itself, i.e. its function set, the temperature range, and the supply voltage
- the package and the type of delivery.

For the available ordering codes for the C164CI please refer to the **"Product Catalog Microcontrollers"**, which summarizes all available microcontroller variants.

Note: The ordering codes for Mask-ROM versions are defined for each product after verification of the respective ROM code.

Introduction

The C164CI derivatives of the Infineon C166 Family of full featured single-chip CMOS microcontrollers are especially suited for cost sensitive applications. They combine high CPU performance (up to 12.5 million instructions per second) with high peripheral functionality and enhanced IO-capabilities. They also provide clock generation via PLL and various on-chip memory modules such as program ROM or OTP, internal RAM, and extension RAM.

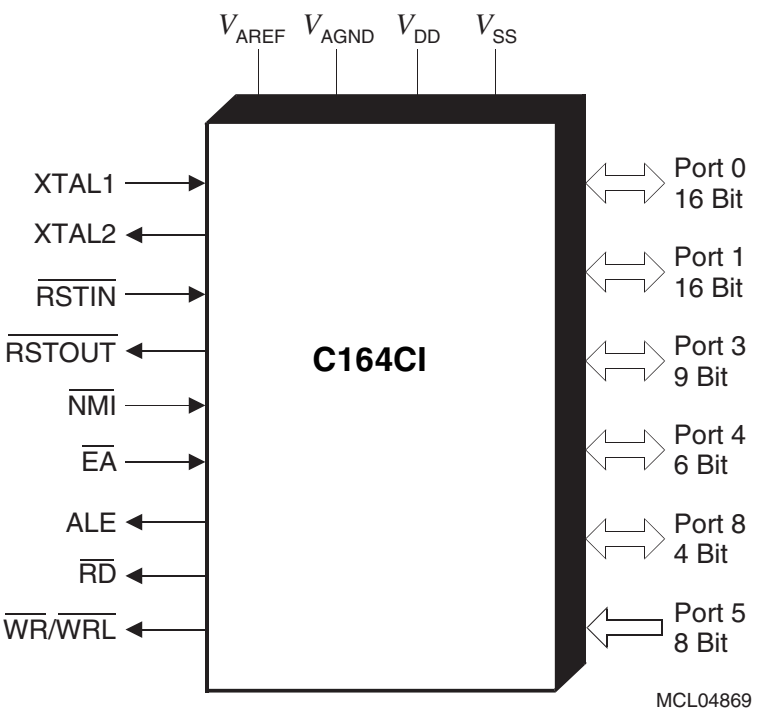

Figure 1 Logic Symbol

Pin Configuration
(top view)

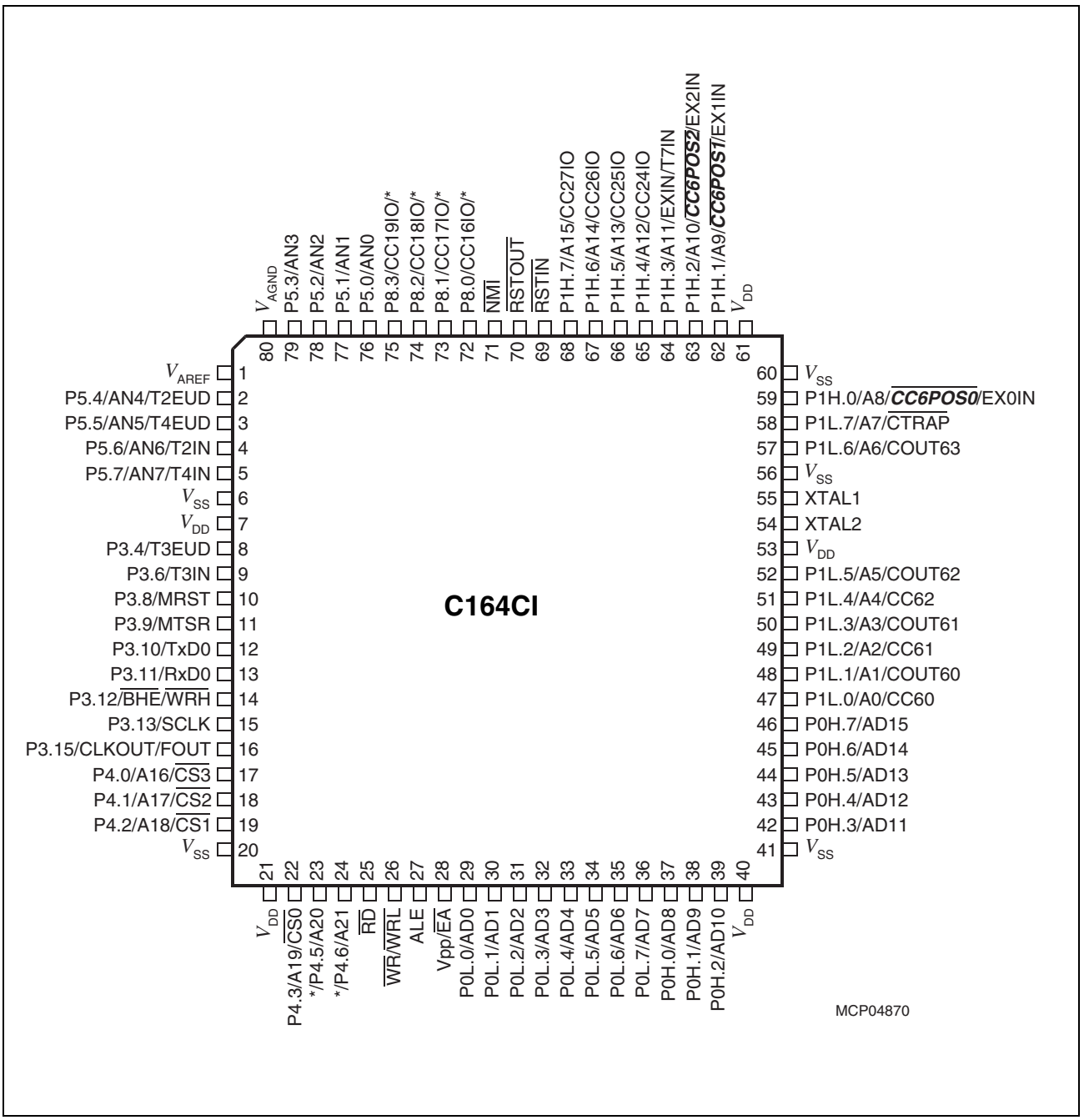

Figure 2

***)** The marked pins of Port 4 and Port 8 can have CAN interface lines assigned to them. **Table 2** on the pages below lists the possible assignments.

The ***marked input signals*** are available only in devices with a full-function CAPCOM6. They are not available in devices with a reduced-function CAPCOM6.

Table 2 Pin Definitions and Functions

Symbol	Pin No.	Input Outp.	Function		
P5		I	Port 5 is an 8-bit input-only port with Schmitt-Trigger charact. The pins of Port 5 also serve as analog input channels for the A/D converter, or they serve as timer inputs:		
P5.0	76	I	AN0		
P5.1	77	I	AN1		
P5.2	78	I	AN2		
P5.3	79	I	AN3		
P5.4	2	I	AN4,	T2EUD	GPT1 Timer T2 Ext. Up/Down Ctrl. Inp.
P5.5	3	I	AN5,	T4EUD	GPT1 Timer T4 Ext. Up/Down Ctrl. Inp.
P5.6	4	I	AN6,	T2IN	GPT1 Timer T2 Input for Count/Gate/Reload/Capture
P5.7	5	I	AN7,	T4IN	GPT1 Timer T4 Input for Count/Gate/Reload/Capture
P3		IO	Port 3 is a 9-bit bidirectional I/O port. It is bit-wise programmable for input or output via direction bits. For a pin configured as input, the output driver is put into high-impedance state. Port 3 outputs can be configured as push/pull or open drain drivers. The input threshold of Port 3 is selectable (TTL or special). The following Port 3 pins also serve for alternate functions:		
P3.4	8	I	T3EUD	GPT1 Timer T3 External Up/Down Control Input	
P3.6	9	I	T3IN	GPT1 Timer T3 Count/Gate Input	
P3.8	10	I/O	MRST	SSC Master-Receive/Slave-Transmit Inp./Outp.	
P3.9	11	I/O	MTSR	SSC Master-Transmit/Slave-Receive Outp./Inp.	
P3.10	12	O	TxD0	ASC0 Clock/Data Output (Async./Sync.)	
P3.11	13	I/O	RxD0	ASC0 Data Input (Async.) or Inp./Outp. (Sync.)	
P3.12	14	O	$\overline{\text{BHE}}$	External Memory High Byte Enable Signal,	
		O	$\overline{\text{WRH}}$	External Memory High Byte Write Strobe	
P3.13	15	I/O	SCLK	SSC Master Clock Output / Slave Clock Input.	
P3.15	16	O	CLKOUT	System Clock Output (= CPU Clock),	
		O	FOUT	Programmable Frequency Output	

Table 2 Pin Definitions and Functions (cont'd)

Symbol	Pin No.	Input Outp.	Function
P4		IO	Port 4 is a 6-bit bidirectional I/O port. It is bit-wise programmable for input or output via direction bits. For a pin configured as input, the output driver is put into high-impedance state. Port 4 outputs can be configured as push/pull or open drain drivers. The input threshold of Port 4 is selectable (TTL or special). Port 4 can be used to output the segment address lines, the optional chip select lines, and for serial interface lines:[1)]
P4.0	17	O O	A16 Least Significant Segment Address Line, $\overline{CS3}$ Chip Select 3 Output
P4.1	18	O O	A17 Segment Address Line, $\overline{CS2}$ Chip Select 2 Output
P4.2	19	O O	A18 Segment Address Line, $\overline{CS1}$ Chip Select 1 Output
P4.3	22	O O	A19 Segment Address Line, $\overline{CS0}$ Chip Select 0 Output
P4.5	23	O I	A20 Segment Address Line, CAN1_RxD CAN 1 Receive Data Input
P4.6	24	O O	A21 Most Significant Segment Address Line, CAN1_TxD CAN 1 Transmit Data Output
$\overline{RD}$	25	O	External Memory Read Strobe. $\overline{RD}$ is activated for every external instruction or data read access.
$\overline{WR}$/ $\overline{WRL}$	26	O	External Memory Write Strobe. In $\overline{WR}$-mode this pin is activated for every external data write access. In $\overline{WRL}$-mode this pin is activated for low byte data write accesses on a 16-bit bus, and for every data write access on an 8-bit bus. See WRCFG in register SYSCON for mode selection.
ALE	27	O	Address Latch Enable Output. Can be used for latching the address into external memory or an address latch in the multiplexed bus modes.

Table 2 Pin Definitions and Functions (cont'd)

Symbol	Pin No.	Input Outp.	Function
$\overline{EA}/V_{PP}$	28	I	External Access Enable pin. **A low level** at this pin during and after Reset forces the C164CI to latch the configuration from PORT0 and pin $\overline{RD}$, and to begin instruction execution out of external memory. **A high level** forces the C164CI to latch the configuration from pins $\overline{RD}$ and ALE, and to begin instruction execution out of the internal program memory. "ROMless" versions must have this pin tied to '0'. *Note: This pin also accepts the programming voltage for the OTP derivatives.*
PORT0 P0L.0-7 P0H.0-7	 29-36 37-39, 42-46	IO	PORT0 consists of the two 8-bit bidirectional I/O ports P0L and P0H. It is bit-wise programmable for input or output via direction bits. For a pin configured as input, the output driver is put into high-impedance state. In case of an external bus configuration, PORT0 serves as the address (A) and address/data (AD) bus in multiplexed bus modes and as the data (D) bus in demultiplexed bus modes. **Demultiplexed bus modes:** Data Path Width: 8-bit 16-bit P0L.0 – P0L.7: D0 – D7 D0 – D7 P0H.0 – P0H.7: I/O D8 – D15 **Multiplexed bus modes:** Data Path Width: 8-bit 16-bit P0L.0 – P0L.7: AD0 – AD7 AD0 – AD7 P0H.0 – P0H.7: A8 – A15 AD8 – AD15

Table 2 Pin Definitions and Functions (cont'd)

Symbol	Pin No.	Input Outp.	Function
PORT1		IO	PORT1 consists of the two 8-bit bidirectional I/O ports P1L and P1H. It is bit-wise programmable for input or output via direction bits. For a pin configured as input, the output driver is put into high-impedance state. PORT1 is used as the 16-bit address bus (A) in demultiplexed bus modes and also after switching from a demultiplexed bus mode to a multiplexed bus mode.
P1L.0-7	47-52, 57-59		
P1H.0-7	59, 62-68		
			The following PORT1 pins also serve for alt. functions:
P1L.0	47	I/O	CC60 CAPCOM6: Input / Output of Channel 0
P1L.1	48	O	COUT60 CAPCOM6: Output of Channel 0
P1L.2	49	I/O	CC61 CAPCOM6: Input / Output of Channel 1
P1L.3	50	O	COUT61 CAPCOM6: Output of Channel 1
P1L.4	51	I/O	CC62 CAPCOM6: Input / Output of Channel 2
P1L.5	52	O	COUT62 CAPCOM6: Output of Channel 2
P1L.6	57	O	COUT63 Output of 10-bit Compare Channel
P1L.7	58	I	$\overline{\text{CTRAP}}$ CAPCOM6: Trap Input
			$\overline{\text{CTRAP}}$ is an input pin with an internal pullup resistor. A low level on this pin switches the compare outputs of the CAPCOM6 unit to the logic level defined by software.
P1H.0	59	I	$\overline{\text{CC6POS0}}$ CAPCOM6: Position 0 Input, **)
		I	EX0IN Fast External Interrupt 0 Input
P1H.1	62	I	$\overline{\text{CC6POS1}}$ CAPCOM6: Position 1 Input, **)
		I	EX1IN Fast External Interrupt 1 Input
P1H.2	63	I	$\overline{\text{CC6POS2}}$ CAPCOM6: Position 2 Input, **)
		I	EX2IN Fast External Interrupt 2 Input
P1H.3	64	I	EX3IN Fast External Interrupt 3 Input,
			T7IN CAPCOM2: Timer T7 Count Input
P1H.4	65	I/O	CC24IO CAPCOM2: CC24 Capture Inp./Compare Outp.
P1H.5	66	I/O	CC25IO CAPCOM2: CC25 Capture Inp./Compare Outp.
P1H.6	67	I/O	CC26IO CAPCOM2: CC26 Capture Inp./Compare Outp.
P1H.7	68	I/O	CC27IO CAPCOM2: CC27 Capture Inp./Compare Outp.
			Note: The marked (**) input signals are available only in devices with a full function CAPCOM6.

Table 2 Pin Definitions and Functions (cont'd)

Symbol	Pin No.	Input Outp.	Function
XTAL2 XTAL1	54 55	O I	XTAL2: Output of the oscillator amplifier circuit. XTAL1: Input to the oscillator amplifier and input to the internal clock generator To clock the device from an external source, drive XTAL1, while leaving XTAL2 unconnected. Minimum and maximum high/low and rise/fall times specified in the AC Characteristics must be observed.
$\overline{\text{RSTIN}}$	69	I/O	Reset Input with Schmitt-Trigger characteristics. A low level at this pin while the oscillator is running resets the C164CI. An internal pullup resistor permits power-on reset using only a capacitor connected to V_{SS}. A spike filter suppresses input pulses <10 ns. Input pulses >100 ns safely pass the filter. The minimum duration for a safe recognition should be 100 ns + 2 CPU clock cycles. In bidirectional reset mode (enabled by setting bit BDRSTEN in register SYSCON) the $\overline{\text{RSTIN}}$ line is internally pulled low for the duration of the internal reset sequence upon any reset (HW, SW, WDT). See note below this table.
$\overline{\text{RST}}$ $\overline{\text{OUT}}$	70	O	Internal Reset Indication Output. This pin is set to a low level when the part is executing either a hardware-, a software- or a watchdog timer reset. $\overline{\text{RSTOUT}}$ remains low until the EINIT (end of initialization) instruction is executed.
$\overline{\text{NMI}}$	71	I	Non-Maskable Interrupt Input. A high to low transition at this pin causes the CPU to vector to the NMI trap routine. When the PWRDN (power down) instruction is executed, the $\overline{\text{NMI}}$ pin must be low in order to force the C164CI to go into power down mode. If $\overline{\text{NMI}}$ is high, when PWRDN is executed, the part will continue to run in normal mode. If not used, pin $\overline{\text{NMI}}$ should be pulled high externally.

Table 2 Pin Definitions and Functions (cont'd)

Symbol	Pin No.	Input Outp.	Function
P8		IO	Port 8 is a 4-bit bidirectional I/O port. It is bit-wise programmable for input or output via direction bits. For a pin configured as input, the output driver is put into high-impedance state. Port 8 outputs can be configured as push/pull or open drain drivers. The input threshold of Port 8 is selectable (TTL or special). Port 8 pins provide inputs/outputs for CAPCOM2 and serial interface lines.[1)]
P8.0	72	I/O I	CC16IO CAPCOM2: CC16 Capture Inp./Compare Outp., CAN1_RxD CAN 1 Receive Data Input
P8.1	73	I/O O	CC17IO CAPCOM2: CC17 Capture Inp./Compare Outp., CAN1_TxD CAN 1 Transmit Data Output
P8.2	74	I/O I	CC18IO CAPCOM2: CC18 Capture Inp./Compare Outp., CAN1_RxD CAN 1 Receive Data Input
P8.3	75	I/O O	CC19IO CAPCOM2: CC19 Capture Inp./Compare Outp., CAN1_TxD CAN 1 Transmit Data Output
V_{AREF}	1	–	Reference voltage for the A/D converter.
V_{AGND}	80	–	Reference ground for the A/D converter.
V_{DD}	7, 21, 40, 53, 61	–	Digital Supply Voltage: +5 V during normal operation and idle mode. ≥2.5 V during power down mode.
V_{SS}	6, 20, 41, 56, 60	–	Digital Ground.

1) The CAN interface lines are assigned to ports P4 and P8 under software control. Within the CAN module several assignments can be selected.

Note: The following behavioural differences must be observed when the bidirectional reset is active:

- Bit BDRSTEN in register SYSCON cannot be changed after EINIT and is cleared automatically after a reset.
- The reset indication flags always indicate a long hardware reset.
- The PORT0 configuration is treated as if it were a hardware reset. In particular, the bootstrap loader may be activated when P0L.4 is low.
- Pin $\overline{\text{RSTIN}}$ may only be connected to external reset devices with an open drain output driver.
- A short hardware reset is extended to the duration of the internal reset sequence.

Functional Description

The architecture of the C164CI combines advantages of both RISC and CISC processors and of advanced peripheral subsystems in a very well-balanced way. In addition the on-chip memory blocks allow the design of compact systems with maximum performance.
The following block diagram gives an overview of the different on-chip components and of the advanced, high bandwidth internal bus structure of the C164CI.

Note: All time specifications refer to a CPU clock of 25 MHz (see definition in the AC Characteristics section).

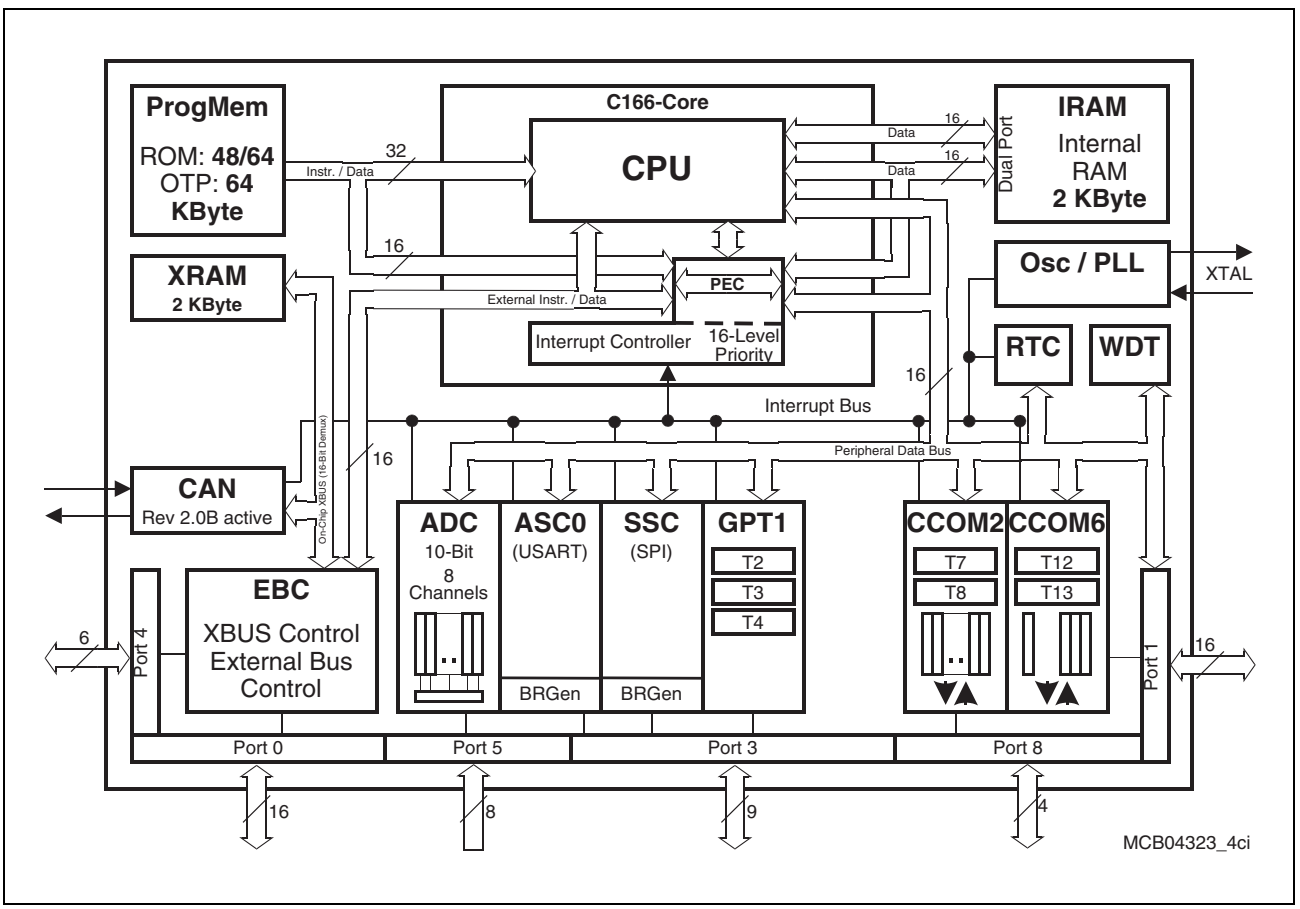

Figure 3 Block Diagram

The program memory, the internal RAM (IRAM) and the set of generic peripherals are connected to the CPU via separate buses. A fourth bus, the XBUS, connects external resources as well as additional on-chip resoures, the X-Peripherals (see **Figure 3**).

The XBUS resources (XRAM, CAN) of the C164CI can be enabled or disabled during initialization by setting the general X-Peripheral enable bit XPEN (SYSCON.2). Modules that are disabled consume neither address space nor port pins.

Memory Organization

The memory space of the C164CI is configured in a Von Neumann architecture which means that code memory, data memory, registers and I/O ports are organized within the same linear address space which includes 16 MBytes. The entire memory space can be accessed bytewise or wordwise. Particular portions of the on-chip memory have additionally been made directly bitaddressable.

The C164CI incorporates 64 KBytes of on-chip OTP memory or 64/48 KBytes of on-chip mask-programmable ROM (not in the ROM-less derivative, of course) for code or constant data. The lower 32 KBytes of the on-chip ROM/OTP can be mapped either to segment 0 or segment 1.
The OTP memory can be programmed by the CPU itself (in system, e.g. during booting) or directly via an external interface (e.g. before assembly). The programming time is approx. 100 µs per word. An external programming voltage V_{PP} = 11.5 V must be supplied for this purpose (via pin $\overline{EA}/V_{PP}$).

2 KBytes of on-chip Internal RAM (IRAM) are provided as a storage for user defined variables, for the system stack, general purpose register banks and even for code. A register bank can consist of up to 16 wordwide (R0 to R15) and/or bytewide (RL0, RH0, …, RL7, RH7) so-called General Purpose Registers (GPRs).

1024 bytes (2 × 512 bytes) of the address space are reserved for the Special Function Register areas (SFR space and ESFR space). SFRs are wordwide registers which are used for controlling and monitoring functions of the different on-chip units. Unused SFR addresses are reserved for future members of the C166 Family.

2 KBytes of on-chip Extension RAM (XRAM) are provided to store user data, user stacks, or code. The XRAM is accessed like external memory and therefore cannot be used for the system stack or for register banks and is not bitaddressable. The XRAM permits 16-bit accesses with maximum speed.

In order to meet the needs of designs where more memory is required than is provided on chip, up to 4 MBytes of external RAM and/or ROM can be connected to the microcontroller.

External Bus Controller

All of the external memory accesses are performed by a particular on-chip External Bus Controller (EBC). It can be programmed either to Single Chip Mode when no external memory is required, or to one of four different external memory access modes, which are as follows:

– 16-/18-/20-/22-bit Addresses, 16-bit Data, Demultiplexed
– 16-/18-/20-/22-bit Addresses, 16-bit Data, Multiplexed
– 16-/18-/20-/22-bit Addresses, 8-bit Data, Multiplexed
– 16-/18-/20-/22-bit Addresses, 8-bit Data, Demultiplexed

In the demultiplexed bus modes, addresses are output on PORT1 and data is input/output on PORT0 or P0L, respectively. In the multiplexed bus modes both addresses and data use PORT0 for input/output.

Important timing characteristics of the external bus interface (Memory Cycle Time, Memory Tri-State Time, Length of ALE and Read Write Delay) have been made programmable to allow the user the adaption of a wide range of different types of memories and external peripherals.
In addition, up to 4 independent address windows may be defined (via register pairs ADDRSELx / BUSCONx) which control the access to different resources with different bus characteristics. These address windows are arranged hierarchically where BUSCON4 overrides BUSCON3 and BUSCON2 overrides BUSCON1. All accesses to locations not covered by these 4 address windows are controlled by BUSCON0.

Up to 4 external $\overline{CS}$ signals (3 windows plus default) can be generated in order to save external glue logic. The C164CI offers the possibility to switch the $\overline{CS}$ outputs to an unlatched mode. In this mode the internal filter logic is switched off and the $\overline{CS}$ signals are directly generated from the address. The unlatched $\overline{CS}$ mode is enabled by setting CSCFG (SYSCON.6).

For applications which require less than 4 MBytes of external memory space, this address space can be restricted to 1 MByte, 256 KByte, or to 64 KByte. In this case Port 4 outputs four, two, or no address lines at all. It outputs all 6 address lines, if an address space of 4 MBytes is used.

Note: When the on-chip CAN Module is used with the interface lines assigned to Port 4, the CAN lines override the segment address lines and the segment address output on Port 4 is therefore limited to 4 bits i.e. address lines A19 … A16.

Central Processing Unit (CPU)

The main core of the CPU consists of a 4-stage instruction pipeline, a 16-bit arithmetic and logic unit (ALU) and dedicated SFRs. Additional hardware has been spent for a separate multiply and divide unit, a bit-mask generator and a barrel shifter.

Based on these hardware provisions, most of the C164CI's instructions can be executed in just one machine cycle which requires 2 CPU clocks (4 TCL). For example, shift and rotate instructions are always processed during one machine cycle independent of the number of bits to be shifted. All multiple-cycle instructions have been optimized so that they can be executed very fast as well: branches in 2 cycles, a 16 × 16 bit multiplication in 5 cycles and a 32-/16-bit division in 10 cycles. Another pipeline optimization, the so-called 'Jump Cache', reduces the execution time of repeatedly performed jumps in a loop from 2 cycles to 1 cycle.

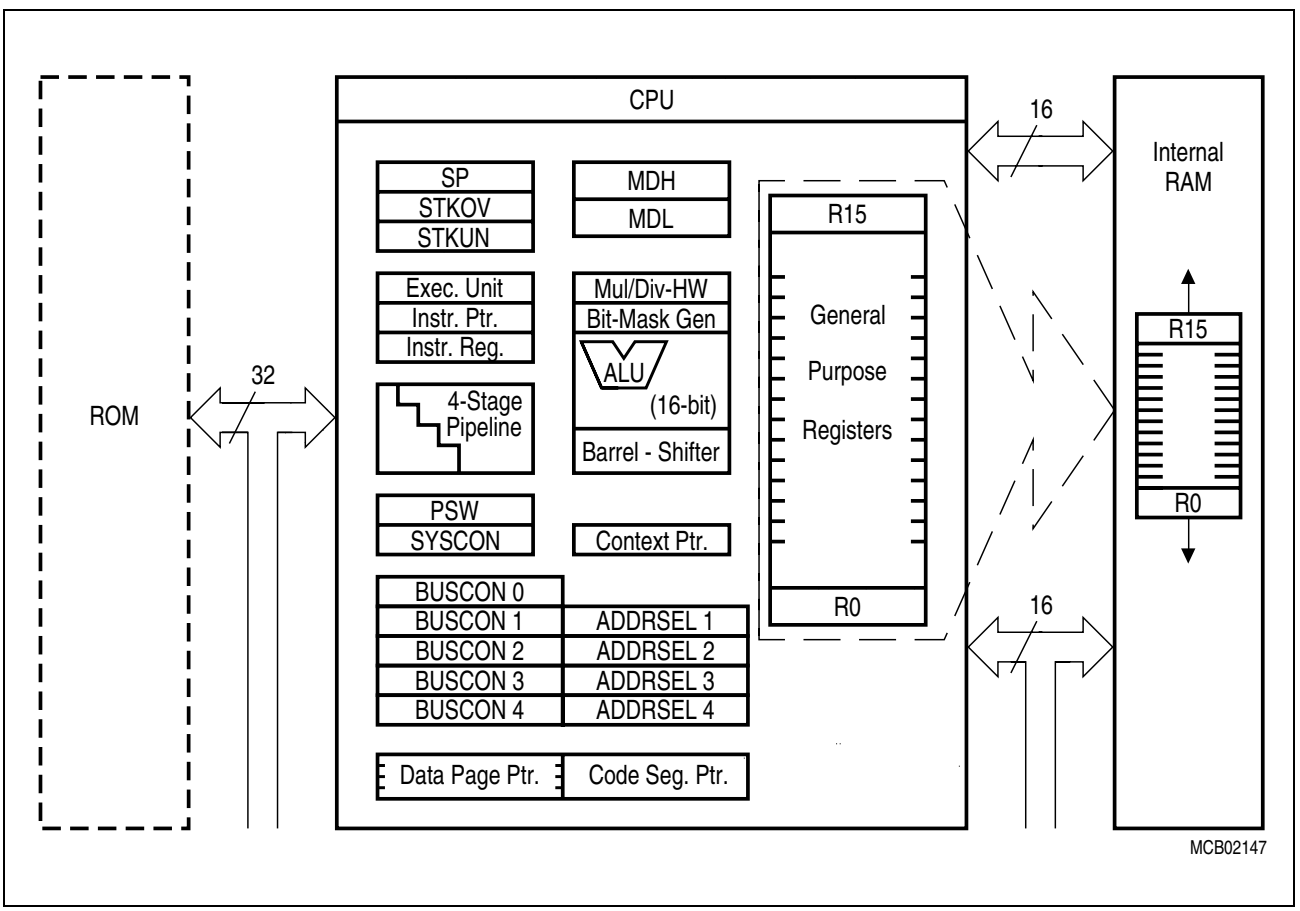

Figure 4 CPU Block Diagram

The CPU has a register context consisting of up to 16 wordwide GPRs at its disposal. These 16 GPRs are physically allocated within the on-chip RAM area. A Context Pointer (CP) register determines the base address of the active register bank to be accessed by the CPU at any time. The number of register banks is only restricted by the available internal RAM space. For easy parameter passing, a register bank may overlap others.

A system stack of up to 1024 words is provided as a storage for temporary data. The system stack is allocated in the on-chip RAM area, and it is accessed by the CPU via the stack pointer (SP) register. Two separate SFRs, STKOV and STKUN, are implicitly compared against the stack pointer value upon each stack access for the detection of a stack overflow or underflow.

The high performance offered by the hardware implementation of the CPU can efficiently be utilized by a programmer via the highly efficient C164CI instruction set which includes the following instruction classes:

– Arithmetic Instructions
– Logical Instructions
– Boolean Bit Manipulation Instructions
– Compare and Loop Control Instructions
– Shift and Rotate Instructions
– Prioritize Instruction
– Data Movement Instructions
– System Stack Instructions
– Jump and Call Instructions
– Return Instructions
– System Control Instructions
– Miscellaneous Instructions

The basic instruction length is either 2 or 4 bytes. Possible operand types are bits, bytes and words. A variety of direct, indirect or immediate addressing modes are provided to specify the required operands.

Interrupt System

With an interrupt response time within a range from just 5 to 12 CPU clocks (in case of internal program execution), the C164CI is capable of reacting very fast to the occurrence of non-deterministic events.

The architecture of the C164CI supports several mechanisms for fast and flexible response to service requests that can be generated from various sources internal or external to the microcontroller. Any of these interrupt requests can be programmed to being serviced by the Interrupt Controller or by the Peripheral Event Controller (PEC).

In contrast to a standard interrupt service where the current program execution is suspended and a branch to the interrupt vector table is performed, just one cycle is 'stolen' from the current CPU activity to perform a PEC service. A PEC service implies a single byte or word data transfer between any two memory locations with an additional increment of either the PEC source or the destination pointer. An individual PEC transfer counter is implicity decremented for each PEC service except when performing in the continuous transfer mode. When this counter reaches zero, a standard interrupt is performed to the corresponding source related vector location. PEC services are very well suited, for example, for supporting the transmission or reception of blocks of data. The C164CI has 8 PEC channels each of which offers such fast interrupt-driven data transfer capabilities.

A separate control register which contains an interrupt request flag, an interrupt enable flag and an interrupt priority bitfield exists for each of the possible interrupt sources. Via its related register, each source can be programmed to one of sixteen interrupt priority levels. Once having been accepted by the CPU, an interrupt service can only be interrupted by a higher prioritized service request. For the standard interrupt processing, each of the possible interrupt sources has a dedicated vector location.

Fast external interrupt inputs are provided to service external interrupts with high precision requirements. These fast interrupt inputs feature programmable edge detection (rising edge, falling edge or both edges).

Software interrupts are supported by means of the 'TRAP' instruction in combination with an individual trap (interrupt) number.

Table 3 shows all of the possible C164CI interrupt sources and the corresponding hardware-related interrupt flags, vectors, vector locations and trap (interrupt) numbers.

Note: Interrupt nodes which are not used by associated peripherals, may be used to generate software controlled interrupt requests by setting the respective interrupt request bit (xIR).

Table 3 C164CI Interrupt Nodes

Source of Interrupt or PEC Service Request	Request Flag	Enable Flag	Interrupt Vector	Vector Location	Trap Number
Fast External Interrupt 0	CC8IR	CC8IE	CC8INT	$00'0060_H$	18_H
Fast External Interrupt 1	CC9IR	CC9IE	CC9INT	$00'0064_H$	19_H
Fast External Interrupt 2	CC10IR	CC10IE	CC10INT	$00'0068_H$	$1A_H$
Fast External Interrupt 3	CC11IR	CC11IE	CC11INT	$00'006C_H$	$1B_H$
GPT1 Timer 2	T2IR	T2IE	T2INT	$00'0088_H$	22_H
GPT1 Timer 3	T3IR	T3IE	T3INT	$00'008C_H$	23_H
GPT1 Timer 4	T4IR	T4IE	T4INT	$00'0090_H$	24_H
A/D Conversion Complete	ADCIR	ADCIE	ADCINT	$00'00A0_H$	28_H
A/D Overrun Error	ADEIR	ADEIE	ADEINT	$00'00A4_H$	29_H
ASC0 Transmit	S0TIR	S0TIE	S0TINT	$00'00A8_H$	$2A_H$
ASC0 Transmit Buffer	S0TBIR	S0TBIE	S0TBINT	$00'011C_H$	47_H
ASC0 Receive	S0RIR	S0RIE	S0RINT	$00'00AC_H$	$2B_H$
ASC0 Error	S0EIR	S0EIE	S0EINT	$00'00B0_H$	$2C_H$
SSC Transmit	SCTIR	SCTIE	SCTINT	$00'00B4_H$	$2D_H$
SSC Receive	SCRIR	SCRIE	SCRINT	$00'00B8_H$	$2E_H$
SSC Error	SCEIR	SCEIE	SCEINT	$00'00BC_H$	$2F_H$
CAPCOM Register 16	CC16IR	CC16IE	CC16INT	$00'00C0_H$	30_H
CAPCOM Register 17	CC17IR	CC17IE	CC17INT	$00'00C4_H$	31_H
CAPCOM Register 18	CC18IR	CC18IE	CC18INT	$00'00C8_H$	32_H
CAPCOM Register 19	CC19IR	CC19IE	CC19INT	$00'00CC_H$	33_H
CAPCOM Register 24	CC24IR	CC24IE	CC24INT	$00'00E0_H$	38_H
CAPCOM Register 25	CC25IR	CC25IE	CC25INT	$00'00E4_H$	39_H
CAPCOM Register 26	CC26IR	CC26IE	CC26INT	$00'00E8_H$	$3A_H$
CAPCOM Register 27	CC27IR	CC27IE	CC27INT	$00'00EC_H$	$3B_H$
CAPCOM Timer 7	T7IR	T7IE	T7INT	$00'00F4_H$	$3D_H$
CAPCOM Timer 8	T8IR	T8IE	T8INT	$00'00F8_H$	$3E_H$
CAPCOM6 Interrupt	CC6IR	CC6IE	CC6INT	$00'00FC_H$	$3F_H$
CAN Interface 1	XP0IR	XP0IE	XP0INT	$00'0100_H$	40_H
PLL/OWD and RTC	XP3IR	XP3IE	XP3INT	$00'010C_H$	43_H

Table 3 C164CI Interrupt Nodes (cont'd)

Source of Interrupt or PEC Service Request	Request Flag	Enable Flag	Interrupt Vector	Vector Location	Trap Number
CAPCOM 6 Timer 12	T12IR	T12IE	T12INT	$00'0134_H$	$4D_H$
CAPCOM 6 Timer 13	T13IR	T13IE	T13INT	$00'0138_H$	$4E_H$
CAPCOM 6 Emergency	CC6EIR	CC6EIE	CC6EINT	$00'013C_H$	$4F_H$

The C164CI also provides an excellent mechanism to identify and to process exceptions or error conditions that arise during run-time, so-called 'Hardware Traps'. Hardware traps cause immediate non-maskable system reaction which is similar to a standard interrupt service (branching to a dedicated vector table location). The occurence of a hardware trap is additionally signified by an individual bit in the trap flag register (TFR). Except when another higher prioritized trap service is in progress, a hardware trap will interrupt any actual program execution. In turn, hardware trap services can normally not be interrupted by standard or PEC interrupts.

Table 4 shows all of the possible exceptions or error conditions that can arise during run-time:

Table 4 Hardware Trap Summary

Exception Condition	Trap Flag	Trap Vector	Vector Location	Trap Number	Trap Priority
Reset Functions: – Hardware Reset – Software Reset – W-dog Timer Overflow	– 	 RESET RESET RESET	 $00'0000_H$ $00'0000_H$ $00'0000_H$	 00_H 00_H 00_H	 III III III
Class A Hardware Traps: – Non-Maskable Interrupt – Stack Overflow – Stack Underflow	 NMI STKOF STKUF	 NMITRAP STOTRAP STUTRAP	 $00'0008_H$ $00'0010_H$ $00'0018_H$	 02_H 04_H 06_H	 II II II
Class B Hardware Traps: – Undefined Opcode – Protected Instruction Fault – Illegal Word Operand Access – Illegal Instruction Access – Illegal External Bus Access	 UNDOPC PRTFLT ILLOPA ILLINA ILLBUS	 BTRAP BTRAP BTRAP BTRAP BTRAP	 $00'0028_H$ $00'0028_H$ $00'0028_H$ $00'0028_H$ $00'0028_H$	 $0A_H$ $0A_H$ $0A_H$ $0A_H$ $0A_H$	 I I I I I
Reserved	–	–	[$2C_H$ – $3C_H$]	[$0B_H$ – $0F_H$]	–
Software Traps – TRAP Instruction	–	–	Any [$00'0000_H$ – $00'01FC_H$] in steps of 4_H	Any [00_H – $7F_H$]	Current CPU Priority

The Capture/Compare Unit CAPCOM2

The general purpose CAPCOM2 unit supports generation and control of timing sequences on up to 8 channels with a maximum resolution of 16 TCL. The CAPCOM units are typically used to handle high speed I/O tasks such as pulse and waveform generation, pulse width modulation (PMW), Digital to Analog (D/A) conversion, software timing, or time recording relative to external events.
Two 16-bit timers (T7/T8) with reload registers provide two independent time bases for the capture/compare register array.
Each dual purpose capture/compare register, which may be individually allocated to either CAPCOM timer and programmed for capture or compare function, has one port pin associated with it which serves as an input pin for triggering the capture function, or as an output pin to indicate the occurrence of a compare event.

When a capture/compare register has been selected for capture mode, the current contents of the allocated timer will be latched (‘capture’d) into the capture/compare register in response to an external event at the port pin which is associated with this register. In addition, a specific interrupt request for this capture/compare register is generated. Either a positive, a negative, or both a positive and a negative external signal transition at the pin can be selected as the triggering event. The contents of all registers which have been selected for one of the five compare modes are continuously compared with the contents of the allocated timers. When a match occurs between the timer value and the value in a capture/compare register, specific actions will be taken based on the selected compare mode.

Table 5 Compare Modes (CAPCOM2)

Compare Modes	Function
Mode 0	Interrupt-only compare mode; several compare interrupts per timer period are possible
Mode 1	Pin toggles on each compare match; several compare events per timer period are possible
Mode 2	Interrupt-only compare mode; only one compare interrupt per timer period is generated
Mode 3	Pin set ‘1’ on match; pin reset ‘0’ on compare time overflow; only one compare event per timer period is generated
Double Register Mode	Two registers operate on one pin; pin toggles on each compare match; several compare events per timer period are possible. Registers CC16 & CC24 → pin CC16IO Registers CC17 & CC25 → pin CC17IO Registers CC18 & CC26 → pin CC18IO Registers CC19 & CC27 → pin CC19IO

The Capture/Compare Unit CAPCOM6

The CAPCOM6 unit supports generation and control of timing sequences on up to three 16-bit capture/compare channels plus one 10-bit compare channel.
In compare mode the CAPCOM6 unit provides two output signals per channel which have inverted polarity and non-overlapping pulse transitions. The compare channel can generate a single PWM output signal and is further used to modulate the capture/compare output signals.
In capture mode the contents of compare timer 12 is stored in the capture registers upon a signal transition at pins CCx.

Compare timers T12 (16-bit) and T13 (10-bit) are free running timers which are clocked by the prescaled CPU clock.

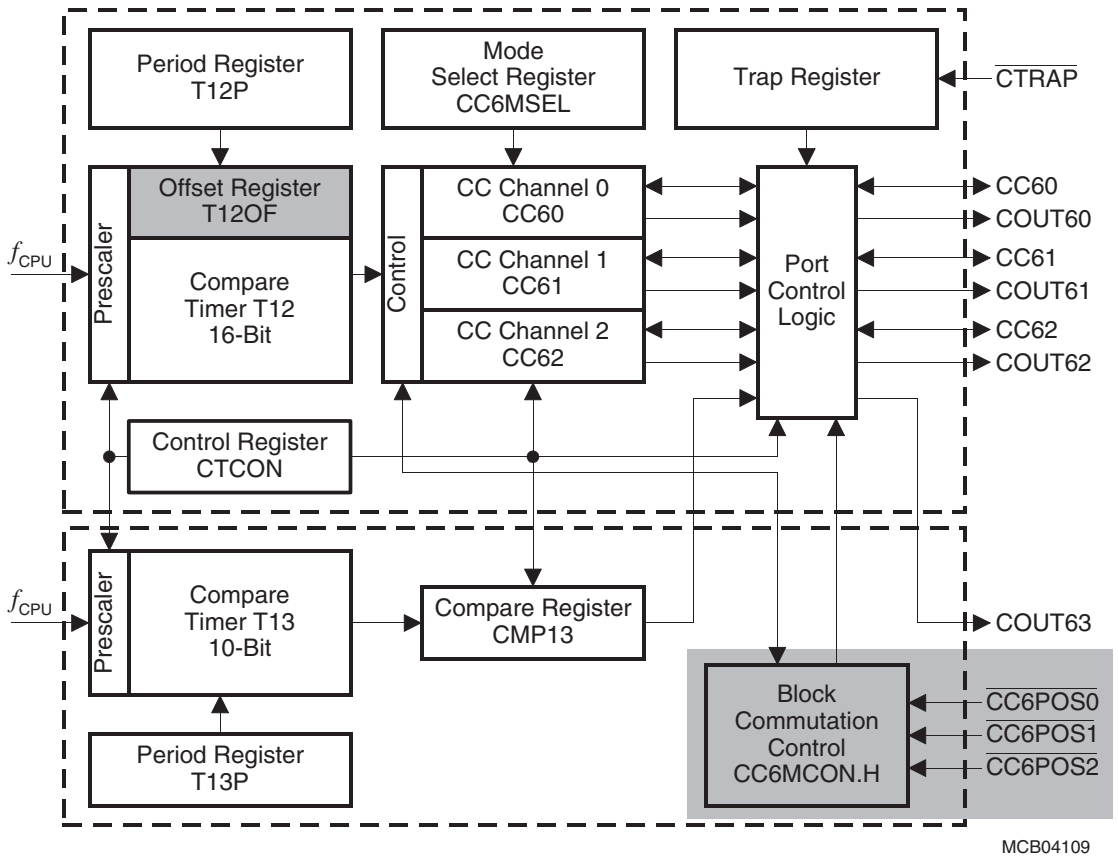

The timer registers (T12, T13) are not directly accessible.
The period and offset registers are loading a value into the timer registers.
The shaded blocks are available in the full function module only.

Figure 5 CAPCOM6 Block Diagram

For motor control applications both subunits may generate versatile multichannel PWM signals which are basically either controlled by compare timer 12 or by a typical hall sensor pattern at the interrupt inputs (block commutation).

Note: Multichannel signal generation is provided only in devices with a full CAPCOM6.

General Purpose Timer (GPT) Unit

The GPT unit represents a very flexible multifunctional timer/counter structure which may be used for many different time related tasks such as event timing and counting, pulse width and duty cycle measurements, pulse generation, or pulse multiplication.

The GPT unit incorporates three 16-bit timers. Each timer may operate independently in a number of different modes, or may be concatenated with another timer.

Each of the three timers T2, T3, T4 of **module GPT1** can be configured individually for one of four basic modes of operation, which are Timer, Gated Timer, Counter, and Incremental Interface Mode. In Timer Mode, the input clock for a timer is derived from the CPU clock, divided by a programmable prescaler, while Counter Mode allows a timer to be clocked in reference to external events.
Pulse width or duty cycle measurement is supported in Gated Timer Mode, where the operation of a timer is controlled by the ‘gate’ level on an external input pin. For these purposes, each timer has one associated port pin (TxIN) which serves as gate or clock input. The maximum resolution of the timers in module GPT1 is 16 TCL.

The count direction (up/down) for each timer is programmable by software or may additionally be altered dynamically by an external signal on a port pin (TxEUD) to facilitate e.g. position tracking.

In Incremental Interface Mode the GPT1 timers (T2, T3, T4) can be directly connected to the incremental position sensor signals A and B via their respective inputs TxIN and TxEUD. Direction and count signals are internally derived from these two input signals, so the contents of the respective timer Tx corresponds to the sensor position. The third position sensor signal TOP0 can be connected to an interrupt input.

Timer T3 has an output toggle latch (T3OTL) which changes its state on each timer overflow/underflow. The state of this latch may be used internally to clock timers T2 and T4 for measuring long time periods with high resolution.

In addition to their basic operating modes, timers T2 and T4 may be configured as reload or capture registers for timer T3. When used as capture or reload registers, timers T2 and T4 are stopped. The contents of timer T3 is captured into T2 or T4 in response to a signal at their associated input pins (TxIN). Timer T3 is reloaded with the contents of T2 or T4 triggered either by an external signal or by a selectable state transition of its toggle latch T3OTL.

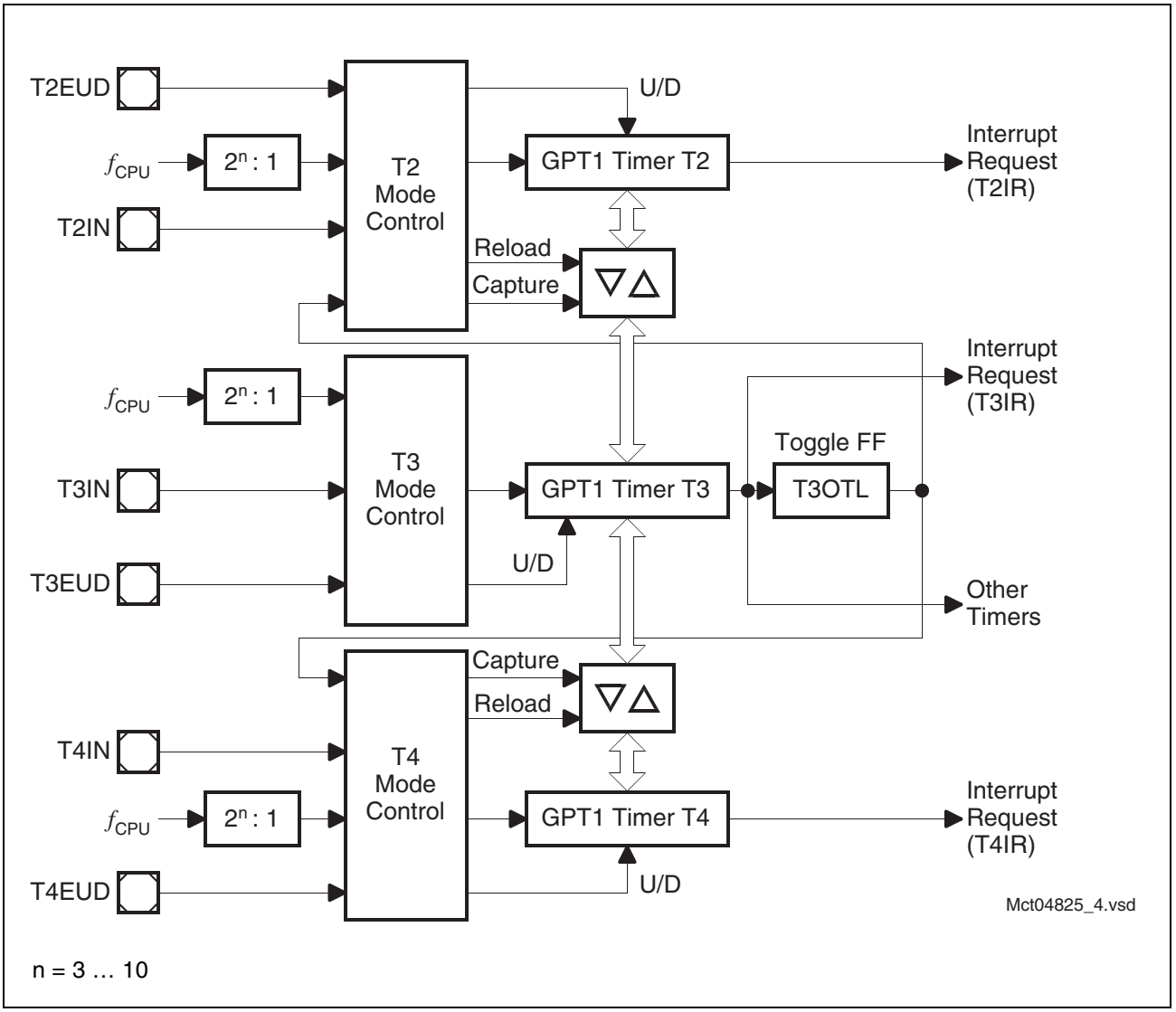

Figure 6 Block Diagram of GPT1

Real Time Clock

The Real Time Clock (RTC) module of the C164CI consists of a chain of 3 divider blocks, a fixed 8:1 divider, the reloadable 16-bit timer T14, and the 32-bit RTC timer (accessible via registers RTCH and RTCL). The RTC module is directly clocked with the on-chip oscillator frequency divided by 32 via a separate clock driver ($f_{RTC} = f_{OSC}/32$) and is therefore independent from the selected clock generation mode of the C164CI. All timers count up.

The RTC module can be used for different purposes:

- System clock to determine the current time and date
- Cyclic time based interrupt
- 48-bit timer for long term measurements

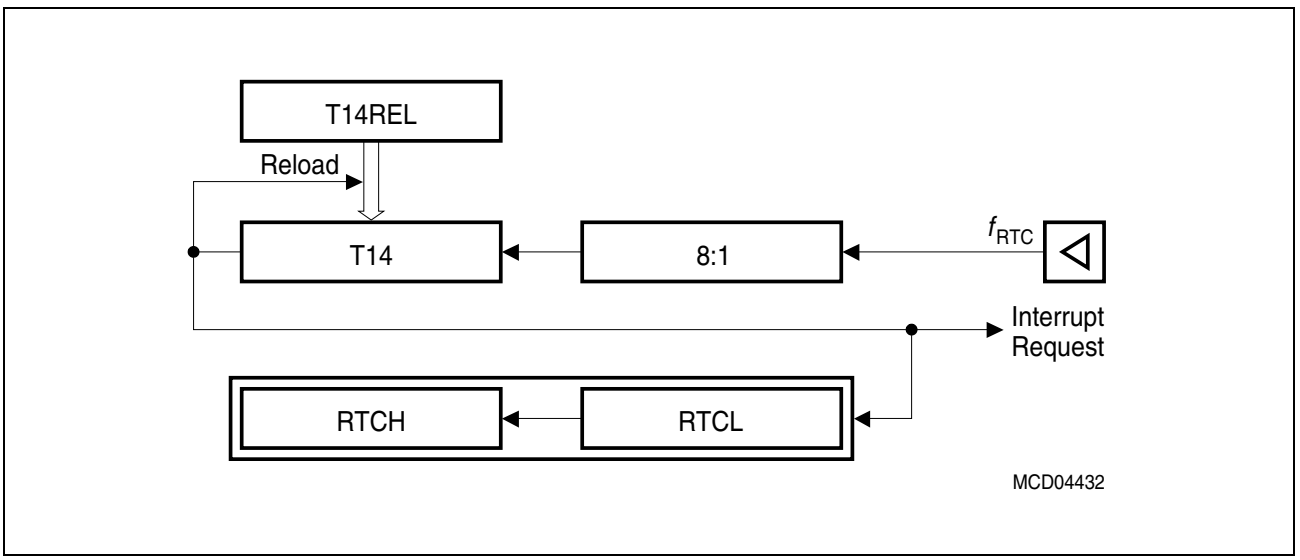

Figure 7 RTC Block Diagram

Note: The registers associated with the RTC are not affected by a reset in order to maintain the correct system time even when intermediate resets are executed.

A/D Converter

For analog signal measurement, a 10-bit A/D converter with 8 multiplexed input channels and a sample and hold circuit has been integrated on-chip. It uses the method of successive approximation. The sample time (for loading the capacitors) and the conversion time is programmable and can so be adjusted to the external circuitry.

Overrun error detection/protection is provided for the conversion result register (ADDAT): either an interrupt request will be generated when the result of a previous conversion has not been read from the result register at the time the next conversion is complete, or the next conversion is suspended in such a case until the previous result has been read.

For applications which require less than 8 analog input channels, the remaining channel inputs can be used as digital input port pins.

The A/D converter of the C164CI supports four different conversion modes. In the standard Single Channel conversion mode, the analog level on a specified channel is sampled once and converted to a digital result. In the Single Channel Continuous mode, the analog level on a specified channel is repeatedly sampled and converted without software intervention. In the Auto Scan mode, the analog levels on a prespecified number of channels (standard or extension) are sequentially sampled and converted. In the Auto Scan Continuous mode, the number of prespecified channels is repeatedly sampled and converted. In addition, the conversion of a specific channel can be inserted (injected) into a running sequence without disturbing this sequence. This is called Channel Injection Mode.

The Peripheral Event Controller (PEC) may be used to automatically store the conversion results into a table in memory for later evaluation, without requiring the overhead of entering and exiting interrupt routines for each data transfer.

After each reset and also during normal operation the ADC automatically performs calibration cycles. This automatic self-calibration constantly adjusts the converter to changing operating conditions (e.g. temperature) and compensates process variations.

These calibration cycles are part of the conversion cycle, so they do not affect the normal operation of the A/D converter.

In order to decouple analog inputs from digital noise and to avoid input trigger noise those pins used for analog input can be disconnected from the digital IO or input stages under software control. This can be selected for each pin separately via register P5DIDIS (Port 5 Digital Input Disable).

Serial Channels

Serial communication with other microcontrollers, processors, terminals or external peripheral components is provided by two serial interfaces with different functionality, an Asynchronous/Synchronous Serial Channel (**ASC0**) and a High-Speed Synchronous Serial Channel (**SSC**).

The ASC0 is upward compatible with the serial ports of the Infineon 8-bit microcontroller families and supports full-duplex asynchronous communication at up to 781 Kbit/s and half-duplex synchronous communication at up to 3.1 Mbit/s (@ 25 MHz CPU clock).
A dedicated baud rate generator allows to set up all standard baud rates without oscillator tuning. For transmission, reception and error handling 4 separate interrupt vectors are provided. In asynchronous mode, 8- or 9-bit data frames are transmitted or received, preceded by a start bit and terminated by one or two stop bits. For multiprocessor communication, a mechanism to distinguish address from data bytes has been included (8-bit data plus wake up bit mode).
In synchronous mode, the ASC0 transmits or receives bytes (8 bits) synchronously to a shift clock which is generated by the ASC0. The ASC0 always shifts the LSB first. A loop back option is available for testing purposes.
A number of optional hardware error detection capabilities has been included to increase the reliability of data transfers. A parity bit can automatically be generated on transmission or be checked on reception. Framing error detection allows to recognize data frames with missing stop bits. An overrun error will be generated, if the last character received has not been read out of the receive buffer register at the time the reception of a new character is complete.

The SSC supports full-duplex synchronous communication at up to 6.25 Mbit/s (@ 25 MHz CPU clock). It may be configured so it interfaces with serially linked peripheral components. A dedicated baud rate generator allows to set up all standard baud rates without oscillator tuning. For transmission, reception and error handling 3 separate interrupt vectors are provided.
The SSC transmits or receives characters of 2 … 16 bits length synchronously to a shift clock which can be generated by the SSC (master mode) or by an external master (slave mode). The SSC can start shifting with the LSB or with the MSB and allows the selection of shifting and latching clock edges as well as the clock polarity.
A number of optional hardware error detection capabilities has been included to increase the reliability of data transfers. Transmit and receive error supervise the correct handling of the data buffer. Phase and baudrate error detect incorrect serial data.

CAN-Module

The integrated CAN-Module handles the completely autonomous transmission and reception of CAN frames in accordance with the CAN specification V2.0 part B (active), i.e. the on-chip CAN-Modules can receive and transmit standard frames with 11-bit identifiers as well as extended frames with 29-bit identifiers.

The module provides Full CAN functionality on up to 15 message objects. Message object 15 may be configured for Basic CAN functionality. Both modes provide separate masks for acceptance filtering which allows to accept a number of identifiers in Full CAN mode and also allows to disregard a number of identifiers in Basic CAN mode. All message objects can be updated independent from the other objects and are equipped for the maximum message length of 8 bytes.

The bit timing is derived from the XCLK and is programmable up to a data rate of 1 Mbit/s. Each CAN-Module uses two pins of Port 4 or Port 8 to interface to an external bus transceiver. The interface pins are assigned via software.

Note: When the CAN interface is assigned to Port 4, the respective segment address lines on Port 4 cannot be used. This will limit the external address space.

Watchdog Timer

The Watchdog Timer represents one of the fail-safe mechanisms which have been implemented to prevent the controller from malfunctioning for longer periods of time.

The Watchdog Timer is always enabled after a reset of the chip, and can only be disabled in the time interval until the EINIT (end of initialization) instruction has been executed. Thus, the chip's start-up procedure is always monitored. The software has to be designed to service the Watchdog Timer before it overflows. If, due to hardware or software related failures, the software fails to do so, the Watchdog Timer overflows and generates an internal hardware reset and pulls the $\overline{\text{RSTOUT}}$ pin low in order to allow external hardware components to be reset.

The Watchdog Timer is a 16-bit timer, clocked with the system clock divided by 2/4/128/256. The high byte of the Watchdog Timer register can be set to a prespecified reload value (stored in WDTREL) in order to allow further variation of the monitored time interval. Each time it is serviced by the application software, the high byte of the Watchdog Timer is reloaded. Thus, time intervals between 20 µs and 336 ms can be monitored (@ 25 MHz).
The default Watchdog Timer interval after reset is 5.24 ms (@ 25 MHz).

Parallel Ports

The C164CI provides up to 59 I/O lines which are organized into five input/output ports and one input port. All port lines are bit-addressable, and all input/output lines are individually (bit-wise) programmable as inputs or outputs via direction registers. The I/O ports are true bidirectional ports which are switched to high impedance state when configured as inputs. The output drivers of three I/O ports can be configured (pin by pin) for push/pull operation or open-drain operation via control registers. During the internal reset, all port pins are configured as inputs.

The input threshold of Port 3, Port 4, and Port 8 is selectable (TTL or CMOS like), where the special CMOS like input threshold reduces noise sensitivity due to the input hysteresis. The input threshold may be selected individually for each byte of the respective ports.

All port lines have programmable alternate input or output functions associated with them. All port lines that are not used for these alternate functions may be used as general purpose IO lines.

PORT0 and PORT1 may be used as address and data lines when accessing external memory, while Port 4 outputs the additional segment address bits A21/19/17 … A16 and the optional chip select signals in systems where segmentation is enabled to access more than 64 KBytes of memory.
Ports P1L, P1H, and P8 are associated with the capture inputs or compare outputs of the CAPCOM units and/or serve as external interrupt inputs.
Port 3 includes alternate functions of timers, serial interfaces, the optional bus control signal $\overline{BHE}$/$\overline{WRH}$, and the system clock output CLKOUT (or the programmable frequency output FOUT).
Port 5 is used for the analog input channels to the A/D converter or timer control signals.

The edge characteristics (transition time) and driver characteristics (output current) of the C164CI's port drivers can be selected via the Port Output Control registers (POCONx).

Oscillator Watchdog

The Oscillator Watchdog (OWD) monitors the clock signal generated by the on-chip oscillator (either with a crystal or via external clock drive). For this operation the PLL provides a clock signal which is used to supervise transitions on the oscillator clock. This PLL clock is independent from the XTAL1 clock. When the expected oscillator clock transitions are missing the OWD activates the PLL Unlock/OWD interrupt node and supplies the CPU with the PLL clock signal. Under these circumstances the PLL will oscillate with its basic frequency.

In direct drive mode the PLL base frequency is used directly (f_{CPU} = 2 … 5 MHz).
In prescaler mode the PLL base frequency is divided by 2 (f_{CPU} = 1 … 2.5 MHz).

Note: The CPU clock source is only switched back to the oscillator clock after a hardware reset.

The oscillator watchdog can be disabled by setting bit OWDDIS in register SYSCON. In this case (OWDDIS = ‘1’) the PLL remains idle and provides no clock signal, while the CPU clock signal is derived directly from the oscillator clock or via prescaler or SDD. Also no interrupt request will be generated in case of a missing oscillator clock.

Note: At the end of a reset bit OWDDIS reflects the inverted level of pin $\overline{RD}$ at that time. Thus the oscillator watchdog may also be disabled via hardware by (externally) pulling the $\overline{RD}$ line low upon a reset, similar to the standard reset configuration via PORT0.

Power Management

The C164CI provides several means to control the power it consumes either at a given time or averaged over a certain timespan. Three mechanisms can be used (partly in parallel):

- **Power Saving Modes** switch the C164CI into a special operating mode (control via instructions).
  Idle Mode stops the CPU while the peripherals can continue to operate.
  Sleep Mode and Power Down Mode stop all clock signals and all operation (RTC may optionally continue running). Sleep Mode can be terminated by external interrupt signals.
- **Clock Generation Management** controls the distribution and the frequency of internal and external clock signals (control via register SYSCON2).
  Slow Down Mode lets the C164CI run at a CPU clock frequency of f_{OSC}/1 … 32 (half for prescaler operation) which drastically reduces the consumed power. The PLL can be optionally disabled while operating in Slow Down Mode.
  External circuitry can be controlled via the programmable frequency output FOUT.
- **Peripheral Management** permits temporary disabling of peripheral modules (control via register SYSCON3).
  Each peripheral can separately be disabled/enabled. A group control option disables a major part of the peripheral set by setting one single bit.

The on-chip RTC supports intermittend operation of the C164CI by generating cyclic wakeup signals. This offers full performance to quickly react on action requests while the intermittend sleep phases greatly reduce the average power consumption of the system.

Instruction Set Summary

Table 6 lists the instructions of the C164CI in a condensed way.
The various addressing modes that can be used with a specific instruction, the operation of the instructions, parameters for conditional execution of instructions, and the opcodes for each instruction can be found in the **"C166 Family Instruction Set Manual"**.

This document also provides a detailled description of each instruction.

Table 6 Instruction Set Summary

Mnemonic	Description	Bytes
ADD(B)	Add word (byte) operands	2 / 4
ADDC(B)	Add word (byte) operands with Carry	2 / 4
SUB(B)	Subtract word (byte) operands	2 / 4
SUBC(B)	Subtract word (byte) operands with Carry	2 / 4
MUL(U)	(Un)Signed multiply direct GPR by direct GPR (16-16-bit)	2
DIV(U)	(Un)Signed divide register MDL by direct GPR (16-/16-bit)	2
DIVL(U)	(Un)Signed long divide reg. MD by direct GPR (32-/16-bit)	2
CPL(B)	Complement direct word (byte) GPR	2
NEG(B)	Negate direct word (byte) GPR	2
AND(B)	Bitwise AND, (word/byte operands)	2 / 4
OR(B)	Bitwise OR, (word/byte operands)	2 / 4
XOR(B)	Bitwise XOR, (word/byte operands)	2 / 4
BCLR	Clear direct bit	2
BSET	Set direct bit	2
BMOV(N)	Move (negated) direct bit to direct bit	4
BAND, BOR, BXOR	AND/OR/XOR direct bit with direct bit	4
BCMP	Compare direct bit to direct bit	4
BFLDH/L	Bitwise modify masked high/low byte of bit-addressable direct word memory with immediate data	4
CMP(B)	Compare word (byte) operands	2 / 4
CMPD1/2	Compare word data to GPR and decrement GPR by 1/2	2 / 4
CMPI1/2	Compare word data to GPR and increment GPR by 1/2	2 / 4
PRIOR	Determine number of shift cycles to normalize direct word GPR and store result in direct word GPR	2
SHL / SHR	Shift left/right direct word GPR	2
ROL / ROR	Rotate left/right direct word GPR	2
ASHR	Arithmetic (sign bit) shift right direct word GPR	2

Table 6 Instruction Set Summary (cont'd)

Mnemonic	Description	Bytes
MOV(B)	Move word (byte) data	2 / 4
MOVBS	Move byte operand to word operand with sign extension	2 / 4
MOVBZ	Move byte operand to word operand with zero extension	2 / 4
JMPA, JMPI, JMPR	Jump absolute/indirect/relative if condition is met	4
JMPS	Jump absolute to a code segment	4
J(N)B	Jump relative if direct bit is (not) set	4
JBC	Jump relative and clear bit if direct bit is set	4
JNBS	Jump relative and set bit if direct bit is not set	4
CALLA, CALLI, CALLR	Call absolute/indirect/relative subroutine if condition is met	4
CALLS	Call absolute subroutine in any code segment	4
PCALL	Push direct word register onto system stack and call absolute subroutine	4
TRAP	Call interrupt service routine via immediate trap number	2
PUSH, POP	Push/pop direct word register onto/from system stack	2
SCXT	Push direct word register onto system stack und update register with word operand	4
RET	Return from intra-segment subroutine	2
RETS	Return from inter-segment subroutine	2
RETP	Return from intra-segment subroutine and pop direct word register from system stack	2
RETI	Return from interrupt service subroutine	2
SRST	Software Reset	4
IDLE	Enter Idle Mode	4
PWRDN	Enter Power Down Mode (supposes $\overline{\text{NMI}}$-pin being low)	4
SRVWDT	Service Watchdog Timer	4
DISWDT	Disable Watchdog Timer	4
EINIT	Signify End-of-Initialization on $\overline{\text{RSTOUT}}$-pin	4
ATOMIC	Begin ATOMIC sequence	2
EXTR	Begin EXTended Register sequence	2
EXTP(R)	Begin EXTended Page (and Register) sequence	2 / 4
EXTS(R)	Begin EXTended Segment (and Register) sequence	2 / 4
NOP	Null operation	2

Special Function Registers Overview

Table 7 lists all SFRs which are implemented in the C164CI in alphabetical order. **Bit-addressable** SFRs are marked with the letter "**b**" in column "Name". SFRs within the **Extended SFR-Space** (ESFRs) are marked with the letter "**E**" in column "Physical Address". Registers within on-chip X-peripherals are marked with the letter "**X**" in column "Physical Address".

An SFR can be specified via its individual mnemonic name. Depending on the selected addressing mode, an SFR can be accessed via its physical address (using the Data Page Pointers), or via its short 8-bit address (without using the Data Page Pointers).

Table 7 C164CI Registers, Ordered by Name

Name	Physical Address	8-Bit Addr.	Description	Reset Value
ADCIC b	$FF98_H$	CC_H	A/D Converter End of Conversion Interrupt Control Register	0000_H
ADCON b	$FFA0_H$	$D0_H$	A/D Converter Control Register	0000_H
ADDAT	$FEA0_H$	50_H	A/D Converter Result Register	0000_H
ADDAT2	$F0A0_H$ **E**	50_H	A/D Converter 2 Result Register	0000_H
ADDRSEL1	$FE18_H$	$0C_H$	Address Select Register 1	0000_H
ADDRSEL2	$FE1A_H$	$0D_H$	Address Select Register 2	0000_H
ADDRSEL3	$FE1C_H$	$0E_H$	Address Select Register 3	0000_H
ADDRSEL4	$FE1E_H$	$0F_H$	Address Select Register 4	0000_H
ADEIC b	$FF9A_H$	CD_H	A/D Converter Overrun Error Interrupt Control Register	0000_H
BUSCON0 b	$FF0C_H$	86_H	Bus Configuration Register 0	0000_H
BUSCON1 b	$FF14_H$	$8A_H$	Bus Configuration Register 1	0000_H
BUSCON2 b	$FF16_H$	$8B_H$	Bus Configuration Register 2	0000_H
BUSCON3 b	$FF18_H$	$8C_H$	Bus Configuration Register 3	0000_H
BUSCON4 b	$FF1A_H$	$8D_H$	Bus Configuration Register 4	0000_H
C1BTR	$EF04_H$ **X**	---	CAN1 Bit Timing Register	$UUUU_H$
C1CSR	$EF00_H$ **X**	---	CAN1 Control / Status Register	$XX01_H$
C1GMS	$EF06_H$ **X**	---	CAN1 Global Mask Short	$UFUU_H$
C1LARn	$EFn4_H$ **X**	---	CAN Lower Arbitration Register (msg. **n**)	$UUUU_H$
C1LGML	$EF0A_H$ **X**	---	CAN Lower Global Mask Long	$UUUU_H$
C1LMLM	$EF0E_H$ **X**	---	CAN Lower Mask of Last Message	$UUUU_H$

Table 7 C164CI Registers, Ordered by Name (cont'd)

Name	Physical Address	8-Bit Addr.	Description	Reset Value
C1MCFGn	$EFn6_H$ **X**	---	CAN Message Configuration Register (msg. **n**)	UU_H
C1MCRn	$EFn0_H$ **X**	---	CAN Message Control Register (msg. **n**)	$UUUU_H$
C1PCIR	$EF02_H$ **X**	---	CAN1 Port Control / Interrupt Register	XXXX_H
C1UARn	$EFn2_H$ **X**	---	CAN Upper Arbitration Register (msg. **n**)	$UUUU_H$
C1UGML	$EF08_H$ **X**	---	CAN Upper Global Mask Long	$UUUU_H$
C1UMLM	$EF0C_H$ **X**	---	CAN Upper Mask of Last Message	$UUUU_H$
CC10IC b	$FF8C_H$	$C6_H$	External Interrupt 2 Control Register	0000_H
CC11IC b	$FF8E_H$	$C7_H$	External Interrupt 3 Control Register	0000_H
CC16	$FE60_H$	30_H	CAPCOM Register 16	0000_H
CC16IC b	$F160_H$ **E**	$B0_H$	CAPCOM Reg. 16 Interrupt Ctrl. Reg.	0000_H
CC17	$FE62_H$	31_H	CAPCOM Register 17	0000_H
CC17IC b	$F162_H$ **E**	$B1_H$	CAPCOM Reg. 17 Interrupt Ctrl. Reg.	0000_H
CC18	$FE64_H$	32_H	CAPCOM Register 18	0000_H
CC18IC b	$F164_H$ **E**	$B2_H$	CAPCOM Reg. 18 Interrupt Ctrl. Reg.	0000_H
CC19	$FE66_H$	33_H	CAPCOM Register 19	0000_H
CC19IC b	$F166_H$ **E**	$B3_H$	CAPCOM Reg. 19 Interrupt Ctrl. Reg.	0000_H
CC20	$FE68_H$	34_H	CAPCOM Register 20	0000_H
CC20IC b	$F168_H$ **E**	$B4_H$	CAPCOM Reg. 20 Interrupt Ctrl. Reg.	0000_H
CC21	$FE6A_H$	35_H	CAPCOM Register 21	0000_H
CC21IC b	$F16A_H$ **E**	$B5_H$	CAPCOM Reg. 21 Interrupt Ctrl. Reg.	0000_H
CC22	$FE6C_H$	36_H	CAPCOM Register 22	0000_H
CC22IC b	$F16C_H$ **E**	$B6_H$	CAPCOM Reg. 22 Interrupt Ctrl. Reg.	0000_H
CC23	$FE6E_H$	37_H	CAPCOM Register 23	0000_H
CC23IC b	$F16E_H$ **E**	$B7_H$	CAPCOM Reg. 23 Interrupt Ctrl. Reg.	0000_H
CC24	$FE70_H$	38_H	CAPCOM Register 24	0000_H
CC24IC b	$F170_H$ **E**	$B8_H$	CAPCOM Reg. 24 Interrupt Ctrl. Reg.	0000_H
CC25	$FE72_H$	39_H	CAPCOM Register 25	0000_H
CC25IC b	$F172_H$ **E**	$B9_H$	CAPCOM Reg. 25 Interrupt Ctrl. Reg.	0000_H
CC26	$FE74_H$	$3A_H$	CAPCOM Register 26	0000_H

Table 7 C164CI Registers, Ordered by Name (cont'd)

Name		Physical Address		8-Bit Addr.	Description	Reset Value
CC26IC	**b**	$F174_H$	**E**	BA_H	CAPCOM Reg. 26 Interrupt Ctrl. Reg.	0000_H
CC27		$FE76_H$		$3B_H$	CAPCOM Register 27	0000_H
CC27IC	**b**	$F176_H$	**E**	BB_H	CAPCOM Reg. 27 Interrupt Ctrl. Reg.	0000_H
CC28		$FE78_H$		$3C_H$	CAPCOM Register 28	0000_H
CC28IC	**b**	$F178_H$	**E**	BC_H	CAPCOM Reg. 28 Interrupt Ctrl. Reg.	0000_H
CC29		$FE7A_H$		$3D_H$	CAPCOM Register 29	0000_H
CC29IC	**b**	$F184_H$	**E**	$C2_H$	CAPCOM Reg. 29 Interrupt Ctrl. Reg.	0000_H
CC30		$FE7C_H$		$3E_H$	CAPCOM Register 30	0000_H
CC30IC	**b**	$F18C_H$	**E**	$C6_H$	CAPCOM Reg. 30 Interrupt Ctrl. Reg.	0000_H
CC31		$FE7E_H$		$3F_H$	CAPCOM Register 31	0000_H
CC31IC	**b**	$F194_H$	**E**	CA_H	CAPCOM Reg. 31 Interrupt Ctrl. Reg.	0000_H
CC60		$FE30_H$		18_H	CAPCOM 6 Register 0	0000_H
CC61		$FE32_H$		19_H	CAPCOM 6 Register 1	0000_H
CC62		$FE34_H$		$1A_H$	CAPCOM 6 Register 2	0000_H
CC6EIC	**b**	$F188_H$	**E**	$C4_H$	CAPCOM 6 Emergency Interrrupt Control Register	0000_H
CC6CIC	**b**	$F17E_H$	**E**	BF_H	CAPCOM 6 Interrupt Control Register	0000_H
CC6MCON	**b**	$FF32_H$		99_H	CAPCOM 6 Mode Control Register	$00FF_H$
CC6MIC	**b**	$FF36_H$		$9B_H$	CAPCOM 6 Mode Interrupt Ctrl. Reg.	0000_H
CC6MSEL		$F036_H$	**E**	$1B_H$	CAPCOM 6 Mode Select Register	0000_H
CC8IC	**b**	$FF88_H$		$C4_H$	External Interrupt 0 Control Register	0000_H
CC9IC	**b**	$FF8A_H$		$C5_H$	External Interrupt 1 Control Register	0000_H
CCM4	**b**	$FF22_H$		91_H	CAPCOM Mode Control Register 4	0000_H
CCM5	**b**	$FF24_H$		92_H	CAPCOM Mode Control Register 5	0000_H
CCM6	**b**	$FF26_H$		93_H	CAPCOM Mode Control Register 6	0000_H
CCM7	**b**	$FF28_H$		94_H	CAPCOM Mode Control Register 7	0000_H
CMP13		$FE36_H$		$1B_H$	CAPCOM 6 Timer 13 Compare Reg.	0000_H
CP		$FE10_H$		08_H	CPU Context Pointer Register	$FC00_H$
CSP		$FE08_H$		04_H	CPU Code Segment Pointer Register (8 bits, not directly writeable)	0000_H

Table 7 C164CI Registers, Ordered by Name (cont'd)

Name		Physical Address		8-Bit Addr.	Description	Reset Value
CTCON	**b**	$FF30_H$		98_H	CAPCOM 6 Compare Timer Ctrl. Reg.	1010_H
DP0H	**b**	$F102_H$	**E**	81_H	P0H Direction Control Register	00_H
DP0L	**b**	$F100_H$	**E**	80_H	P0L Direction Control Register	00_H
DP1H	**b**	$F106_H$	**E**	83_H	P1H Direction Control Register	00_H
DP1L	**b**	$F104_H$	**E**	82_H	P1L Direction Control Register	00_H
DP3	**b**	$FFC6_H$		$E3_H$	Port 3 Direction Control Register	0000_H
DP4	**b**	$FFCA_H$		$E5_H$	Port 4 Direction Control Register	00_H
DP8	**b**	$FFD6_H$		EB_H	Port 8 Direction Control Register	00_H
DPP0		$FE00_H$		00_H	CPU Data Page Pointer 0 Reg. (10 bits)	0000_H
DPP1		$FE02_H$		01_H	CPU Data Page Pointer 1 Reg. (10 bits)	0001_H
DPP2		$FE04_H$		02_H	CPU Data Page Pointer 2 Reg. (10 bits)	0002_H
DPP3		$FE06_H$		03_H	CPU Data Page Pointer 3 Reg. (10 bits)	0003_H
EXICON	**b**	$F1C0_H$	**E**	$E0_H$	External Interrupt Control Register	0000_H
EXISEL	**b**	$F1DA_H$	**E**	ED_H	External Interrupt Source Select Reg.	0000_H
FOCON	**b**	$FFAA_H$		$D5_H$	Frequency Output Control Register	0000_H
IDCHIP		$F07C_H$	**E**	$3E_H$	Identifier	XXXX_H
IDMANUF		$F07E_H$	**E**	$3F_H$	Identifier	1820_H
IDMEM		$F07A_H$	**E**	$3D_H$	Identifier	XXXX_H
IDPROG		$F078_H$	**E**	$3C_H$	Identifier	XXXX_H
IDMEM2		$F076_H$	**E**	$3B_H$	Identifier	XXXX_H
ISNC	**b**	$F1DE_H$	**E**	EF_H	Interrupt Subnode Control Register	0000_H
MDC	**b**	$FF0E_H$		87_H	CPU Multiply Divide Control Register	0000_H
MDH		$FE0C_H$		06_H	CPU Multiply Divide Reg. – High Word	0000_H
MDL		$FE0E_H$		07_H	CPU Multiply Divide Reg. – Low Word	0000_H
ODP3	**b**	$F1C6_H$	**E**	$E3_H$	Port 3 Open Drain Control Register	0000_H
ODP4	**b**	$F1CA_H$	**E**	$E5_H$	Port 4 Open Drain Control Register	00_H
ODP8	**b**	$F1D6_H$	**E**	EB_H	Port 8 Open Drain Control Register	00_H
ONES	**b**	$FF1E_H$		$8F_H$	Constant Value 1's Register (read only)	$FFFF_H$
OPAD		$EDC2_H$	**X**	---	OTP Progr. Interface Address Register	0000_H
OPCTRL		$EDC0_H$	**X**	---	OTP Progr. Interface Control Register	0007_H

Table 7 C164CI Registers, Ordered by Name (cont'd)

Name		Physical Address		8-Bit Addr.	Description	Reset Value
OPDAT		$EDC4_H$	**X**	---	OTP Progr. Interface Data Register	0000_H
P0H	**b**	$FF02_H$		81_H	Port 0 High Reg. (Upper half of PORT0)	00_H
P0L	**b**	$FF00_H$		80_H	Port 0 Low Reg. (Lower half of PORT0)	00_H
P1H	**b**	$FF06_H$		83_H	Port 1 High Reg. (Upper half of PORT1)	00_H
P1L	**b**	$FF04_H$		82_H	Port 1 Low Reg. (Lower half of PORT1)	00_H
P3	**b**	$FFC4_H$		$E2_H$	Port 3 Register	0000_H
P4	**b**	$FFC8_H$		$E4_H$	Port 4 Register (7 bits)	00_H
P5	**b**	$FFA2_H$		$D1_H$	Port 5 Register (read only)	XXXX_H
P5DIDIS	**b**	$FFA4_H$		$D2_H$	Port 5 Digital Input Disable Register	0000_H
P8	**b**	$FFD4_H$		EA_H	Port 8 Register (8 bits)	00_H
PECC0		$FEC0_H$		60_H	PEC Channel 0 Control Register	0000_H
PECC1		$FEC2_H$		61_H	PEC Channel 1 Control Register	0000_H
PECC2		$FEC4_H$		62_H	PEC Channel 2 Control Register	0000_H
PECC3		$FEC6_H$		63_H	PEC Channel 3 Control Register	0000_H
PECC4		$FEC8_H$		64_H	PEC Channel 4 Control Register	0000_H
PECC5		$FECA_H$		65_H	PEC Channel 5 Control Register	0000_H
PECC6		$FECC_H$		66_H	PEC Channel 6 Control Register	0000_H
PECC7		$FECE_H$		67_H	PEC Channel 7 Control Register	0000_H
PICON	**b**	$F1C4_H$	**E**	$E2_H$	Port Input Threshold Control Register	0000_H
POCON0H		$F082_H$	**E**	41_H	Port P0H Output Control Register	0011_H
POCON0L		$F080_H$	**E**	40_H	Port P0L Output Control Register	0011_H
POCON1H		$F086_H$	**E**	43_H	Port P1H Output Control Register	0011_H
POCON1L		$F084_H$	**E**	42_H	Port P1L Output Control Register	0011_H
POCON20		$F0AA_H$	**E**	55_H	Dedicated Pin Output Control Register	0000_H
POCON3		$F08A_H$	**E**	45_H	Port P3 Output Control Register	2222_H
POCON4		$F08C_H$	**E**	46_H	Port P4 Output Control Register	0010_H
POCON8		$F092_H$	**E**	49_H	Port P8 Output Control Register	0022_H
PSW	**b**	$FF10_H$		88_H	CPU Program Status Word	0000_H
RP0H	**b**	$F108_H$	**E**	84_H	System Startup Config. Reg. (Rd. only)	XX_H
RSTCON	**b**	$F1E0_H$	**m**	---	Reset Control Register	$00XX_H$

Table 7 C164CI Registers, Ordered by Name (cont'd)

Name		Physical Address		8-Bit Addr.	Description	Reset Value
RTCH		$F0D6_H$	**E**	$6B_H$	RTC High Register	no
RTCL		$F0D4_H$	**E**	$6A_H$	RTC Low Register	no
S0BG		$FEB4_H$		$5A_H$	Serial Channel 0 Baud Rate Generator Reload Register	0000_H
S0CON	**b**	$FFB0_H$		$D8_H$	Serial Channel 0 Control Register	0000_H
S0EIC	**b**	$FF70_H$		$B8_H$	Serial Channel 0 Error Interrupt Ctrl. Reg.	0000_H
S0RBUF		$FEB2_H$		59_H	Serial Channel 0 Receive Buffer Reg. (read only)	XXXX_H
S0RIC	**b**	$FF6E_H$		$B7_H$	Serial Channel 0 Receive Interrupt Control Register	0000_H
S0TBIC	**b**	$F19C_H$	**E**	CE_H	Serial Channel 0 Transmit Buffer Interrupt Control Register	0000_H
S0TBUF		$FEB0_H$		58_H	Serial Channel 0 Transmit Buffer Reg. (write only)	0000_H
S0TIC	**b**	$FF6C_H$		$B6_H$	Serial Channel 0 Transmit Interrupt Control Register	0000_H
SP		$FE12_H$		09_H	CPU System Stack Pointer Register	$FC00_H$
SSCBR		$F0B4_H$	**E**	$5A_H$	SSC Baudrate Register	0000_H
SSCCON	**b**	$FFB2_H$		$D9_H$	SSC Control Register	0000_H
SSCEIC	**b**	$FF76_H$		BB_H	SSC Error Interrupt Control Register	0000_H
SSCRB		$F0B2_H$	**E**	59_H	SSC Receive Buffer	XXXX_H
SSCRIC	**b**	$FF74_H$		BA_H	SSC Receive Interrupt Control Register	0000_H
SSCTB		$F0B0_H$	**E**	58_H	SSC Transmit Buffer	0000_H
SSCTIC	**b**	$FF72_H$		$B9_H$	SSC Transmit Interrupt Control Register	0000_H
STKOV		$FE14_H$		$0A_H$	CPU Stack Overflow Pointer Register	$FA00_H$
STKUN		$FE16_H$		$0B_H$	CPU Stack Underflow Pointer Register	$FC00_H$
SYSCON	**b**	$FF12_H$		89_H	CPU System Configuration Register	[1]$0xx0_H$
SYSCON1	**b**	$F1DC_H$	**E**	EE_H	CPU System Configuration Register 1	0000_H
SYSCON2	**b**	$F1D0_H$	**E**	$E8_H$	CPU System Configuration Register 2	0000_H
SYSCON3	**b**	$F1D4_H$	**E**	EA_H	CPU System Configuration Register 3	0000_H

Table 7 C164CI Registers, Ordered by Name (cont'd)

Name		Physical Address		8-Bit Addr.	Description	Reset Value
T12IC	**b**	$F190_H$	**E**	$C8_H$	CAPCOM 6 Timer 12 Interrupt Ctrl. Reg.	0000_H
T12OF		$F034_H$	**E**	$1A_H$	CAPCOM 6 Timer 12 Offset Register	0000_H
T12P		$F030_H$	**E**	18_H	CAPCOM 6 Timer 12 Period Register	0000_H
T13IC	**b**	$F198_H$	**E**	CC_H	CAPCOM 6 Timer 13 Interrupt Ctrl. Reg.	0000_H
T13P		$F032_H$	**E**	19_H	CAPCOM 6 Timer 13 Period Register	0000_H
T14		$F0D2_H$	**E**	69_H	RTC Timer 14 Register	no
T14REL		$F0D0_H$	**E**	68_H	RTC Timer 14 Reload Register	no
T2		$FE40_H$		20_H	GPT1 Timer 2 Register	0000_H
T2CON	**b**	$FF40_H$		$A0_H$	GPT1 Timer 2 Control Register	0000_H
T2IC	**b**	$FF60_H$		$B0_H$	GPT1 Timer 2 Interrupt Control Register	0000_H
T3		$FE42_H$		21_H	GPT1 Timer 3 Register	0000_H
T3CON	**b**	$FF42_H$		$A1_H$	GPT1 Timer 3 Control Register	0000_H
T3IC	**b**	$FF62_H$		$B1_H$	GPT1 Timer 3 Interrupt Control Register	0000_H
T4		$FE44_H$		22_H	GPT1 Timer 4 Register	0000_H
T4CON	**b**	$FF44_H$		$A2_H$	GPT1 Timer 4 Control Register	0000_H
T4IC	**b**	$FF64_H$		$B2_H$	GPT1 Timer 4 Interrupt Control Register	0000_H
T7		$F050_H$	**E**	28_H	CAPCOM Timer 7 Register	0000_H
T78CON	**b**	$FF20_H$		90_H	CAPCOM Timer 7 and 8 Ctrl. Reg.	0000_H
T7IC	**b**	$F17A_H$	**E**	BD_H	CAPCOM Timer 7 Interrupt Ctrl. Reg.	0000_H
T7REL		$F054_H$	**E**	$2A_H$	CAPCOM Timer 7 Reload Register	0000_H
T8		$F052_H$	**E**	29_H	CAPCOM Timer 8 Register	0000_H
T8IC	**b**	$F17C_H$	**E**	BE_H	CAPCOM Timer 8 Interrupt Ctrl. Reg.	0000_H
T8REL		$F056_H$	**E**	$2B_H$	CAPCOM Timer 8 Reload Register	0000_H
TFR	**b**	$FFAC_H$		$D6_H$	Trap Flag Register	0000_H
TRCON	**b**	$FF34_H$		$9A_H$	CAPCOM 6 Trap Enable Ctrl. Reg.	$00XX_H$
WDT		$FEAE_H$		57_H	Watchdog Timer Register (read only)	0000_H
WDTCON		$FFAE_H$		$D7_H$	Watchdog Timer Control Register	[2)] $00xx_H$
XP0IC	**b**	$F186_H$	**E**	$C3_H$	CAN1 Module Interrupt Control Register	0000_H
XP1IC	**b**	$F18E_H$	**E**	$C7_H$	Unassigned Interrupt Control Reg.	0000_H

Table 7 C164CI Registers, Ordered by Name (cont'd)

Name		Physical Address		8-Bit Addr.	Description	Reset Value
XP3IC	**b**	$F19E_H$	**E**	CF_H	PLL/RTC Interrupt Control Register	0000_H
ZEROS	**b**	$FF1C_H$		$8E_H$	Constant Value 0's Register (read only)	0000_H

1) The system configuration is selected during reset.

2) The reset value depends on the indicated reset source.

Note: The three registers of the OTP programming interface are, of course, only implemented in the OTP versions of the C164CI.

Absolute Maximum Ratings

Table 8 Absolute Maximum Rating Parameters

Parameter	Symbol	Limit Values		Unit	Notes
		min.	max.		
Storage temperature	T_{ST}	-65	150	°C	–
Junction temperature	T_J	-40	150	°C	under bias
Voltage on V_{DD} pins with respect to ground (V_{SS})	V_{DD}	-0.5	6.5	V	–
Voltage on any pin with respect to ground (V_{SS})	V_{IN}	-0.5	V_{DD} + 0.5	V	–
Input current on any pin during overload condition	–	-10	10	mA	–
Absolute sum of all input currents during overload condition	–	–	|100|	mA	–
Power dissipation	P_{DISS}	–	1.5	W	–

Note: Stresses above those listed under "Absolute Maximum Ratings" may cause permanent damage to the device. This is a stress rating only and functional operation of the device at these or any other conditions above those indicated in the operational sections of this specification is not implied. Exposure to absolute maximum rating conditions for extended periods may affect device reliability.
During absolute maximum rating overload conditions ($V_{IN} > V_{DD}$ or $V_{IN} < V_{SS}$) the voltage on V_{DD} pins with respect to ground (V_{SS}) must not exceed the values defined by the absolute maximum ratings.

Operating Conditions

The following operating conditions must not be exceeded in order to ensure correct operation of the C164CI. All parameters specified in the following sections refer to these operating conditions, unless otherwise noticed.

Table 9 Operating Condition Parameters

Parameter	Symbol	Limit Values		Unit	Notes
		min.	max.		
Digital supply voltage	V_{DD}	4.75	5.5	V	Active mode, f_{CPUmax} = 25 MHz
		2.5[1)]	5.5	V	PowerDown mode
Digital ground voltage	V_{SS}	0		V	Reference voltage
Overload current	I_{OV}	–	±5	mA	Per pin[2)3)]
Absolute sum of overload currents	$\Sigma\|I_{OV}\|$	–	50	mA	[3)]
External Load Capacitance	C_L	–	100	pF	Pin drivers in **default** mode[4)5)]
Ambient temperature	T_A	0	70	°C	SAB-C164CI …
		-40	85	°C	SAF-C164CI …
		-40	125	°C	SAK-C164CI …

1) Output voltages and output currents will be reduced when V_{DD} leaves the range defined for active mode.

2) Overload conditions occur if the standard operatings conditions are exceeded, i.e. the voltage on any pin exceeds the specified range (i.e. $V_{OV} > V_{DD}$ + 0.5 V or $V_{OV} < V_{SS}$ - 0.5 V). The absolute sum of input overload currents on all pins may not exceed **50 mA**. The supply voltage must remain within the specified limits. Proper operation is not guaranteed if overload conditions occur on functional pins line XTAL1, $\overline{RD}$, $\overline{WR}$, etc.

3) Not 100% tested, guaranteed by design and characterization.

4) The timing is valid for pin drivers operating in default current mode (selected after reset). Reducing the output current may lead to increased delays or reduced driving capability (C_L).

5) The current ROM-version of the C164CI is equipped with port drivers, which provide reduced driving capability and reduced control. Please refer to the actual errata sheet for details.

Parameter Interpretation

The parameters listed in the following partly represent the characteristics of the C164CI and partly its demands on the system. To aid in interpreting the parameters right, when evaluating them for a design, they are marked in column “Symbol”:

CC (**C**ontroller **C**haracteristics):
The logic of the C164CI will provide signals with the respective characteristics.

SR (**S**ystem **R**equirement):
The external system must provide signals with the respective characteristics to the C164CI.

DC Characteristics

(Operating Conditions apply)[1)]

Parameter	Symbol		Limit Values		Unit	Test Conditions
			min.	max.		
Input low voltage (TTL, all except XTAL1)	V_{IL}	SR	-0.5	0.2 V_{DD} - 0.1	V	–
Input low voltage XTAL1	V_{IL2}	SR	-0.5	0.3 V_{DD}	V	–
Input low voltage (Special Threshold)	V_{ILS}	SR	-0.5	2.0	V	–
Input high voltage (TTL, all except $\overline{\text{RSTIN}}$, XTAL1)	V_{IH}	SR	0.2 V_{DD} + 0.9	V_{DD} + 0.5	V	–
Input high voltage $\overline{\text{RSTIN}}$ (when operated as input)	V_{IH1}	SR	0.6 V_{DD}	V_{DD} + 0.5	V	–
Input high voltage XTAL1	V_{IH2}	SR	0.7 V_{DD}	V_{DD} + 0.5	V	–
Input high voltage (Special Threshold)	V_{IHS}	SR	0.8 V_{DD} - 0.2	V_{DD} + 0.5	V	–
Input Hysteresis (Special Threshold)	HYS		400	–	mV	Series resistance = 0 Ω
Output low voltage[2)]	V_{OL}	CC	–	1.0	V	$I_{OL} \leq I_{OLmax}$[3)]
			–	0.45	V	$I_{OL} \leq I_{OLnom}$[3)4)]
Output high voltage[5)]	V_{OH}	CC	V_{DD} - 1.0	–	V	$I_{OH} \geq I_{OHmax}$[3)]
			V_{DD} - 0.45	–	V	$I_{OH} \geq I_{OHnom}$[3)4)]
Input leakage current (Port 5)	I_{OZ1}	CC	–	±200	nA	0 V < V_{IN} < V_{DD}

DC Characteristics (cont'd)
(Operating Conditions apply)[1)]

Parameter	Symbol	Limit Values		Unit	Test Conditions
		min.	max.		
Input leakage current (all other)	I_{OZ2} CC	–	±500	nA	0.45 V < V_{IN} < V_{DD}
$\overline{RSTIN}$ inactive current[6)]	I_{RSTH}[7)]	–	-10	µA	$V_{IN} = V_{IH1}$
$\overline{RSTIN}$ active current[6)]	I_{RSTL}[8)]	-100	–	µA	$V_{IN} = V_{IL}$
$\overline{RD}/\overline{WR}$ inact. current[9)]	I_{RWH}[7)]	–	-40	µA	V_{OUT} = 2.4 V
$\overline{RD}/\overline{WR}$ active current[9)]	I_{RWL}[8)]	-500	–	µA	$V_{OUT} = V_{OLmax}$
ALE inactive current[9)]	I_{ALEL}[7)]	–	40	µA	$V_{OUT} = V_{OLmax}$
ALE active current[9)]	I_{ALEH}[8)]	500	–	µA	V_{OUT} = 2.4 V
Port 4 inactive current[9)]	I_{P4H}[7)]	–	-40	µA	V_{OUT} = 2.4 V
Port 4 active current[9)]	I_{P4L}[8)]	-500	–	µA	$V_{OUT} = V_{OL1max}$
PORT0 configuration current[10)]	I_{P0H}[7)]	–	-10	µA	$V_{IN} = V_{IHmin}$
	I_{P0L}[8)]	-100	–	µA	$V_{IN} = V_{ILmax}$
XTAL1 input current	I_{IL} CC	–	±20	µA	0 V < V_{IN} < V_{DD}
Pin capacitance[11)] (digital inputs/outputs)	C_{IO} CC	–	10	pF	f = 1 MHz T_A = 25 °C

1) Keeping signal levels within the levels specified in this table, ensures operation without overload conditions. For signal levels outside these specifications also refer to the specification of the overload current I_{OV}.

2) For pin $\overline{RSTIN}$ this specification is only valid in bidirectional reset mode.

3) The maximum deliverable output current of a port driver depends on the selected output driver mode, see **Table 10**, **Current Limits for Port Output Drivers**. The limit for pin groups must be respected.

4) As a rule, with decreasing output current the output levels approach the respective supply level ($V_{OL} \rightarrow V_{SS}$, $V_{OH} \rightarrow V_{DD}$). However, only the levels for nominal output currents are guaranteed.

5) This specification is not valid for outputs which are switched to open drain mode. In this case the respective output will float and the voltage results from the external circuitry.

6) These parameters describe the $\overline{RSTIN}$ pullup, which equals a resistance of ca. 50 to 250 kΩ.

7) The maximum current may be drawn while the respective signal line remains inactive.

8) The minimum current must be drawn in order to drive the respective signal line active.

9) This specification is valid during Reset and during Adapt-mode. The Port 4 current values are only valid for pins P4.3-0, which can act as $\overline{CS}$ outputs.

10) This specification is valid during Reset if required for configuration, and during Adapt-mode.

11) Not 100% tested, guaranteed by design and characterization.

Table 10 Current Limits for Port Output Drivers

Port Output Driver Mode	Maximum Output Current (I_{OLmax}, $-I_{OHmax}$)[1]	Nominal Output Current (I_{OLnom}, $-I_{OHnom}$)[2]
Strong driver	10 mA	2.5 mA
Medium driver	4.0 mA	1.0 mA
Weak driver	0.5 mA	0.1 mA

1) An output current above $|I_{OXnom}|$ may be drawn from up to three pins at the same time.
For any group of 16 neighboring port output pins the total output current in each direction (ΣI_{OL} and $\Sigma\text{-}I_{OH}$) must remain below 50 mA.

2) The current ROM-version of the C164CI (step Ax) is equipped with port drivers, which provide reduced driving capability and reduced control. Please refer to the actual errata sheet for details.

Power Consumption C164CI (ROM)

(Operating Conditions apply)

Parameter	Symbol	Limit Values		Unit	Test Conditions
		min.	max.		
Power supply current (active) with all peripherals active	I_{DD}	–	1 + 2.5 × f_{CPU}	mA	$\overline{RSTIN}$ = V_{IL} f_{CPU} in [MHz][1]
Idle mode supply current with all peripherals active	I_{IDX}	–	1 + 1.1 × f_{CPU}	mA	$\overline{RSTIN}$ = V_{IH1} f_{CPU} in [MHz][1]
Idle mode supply current with all peripherals deactivated, PLL off, SDD factor = 32	I_{IDO}[2]	–	500 + 50 × f_{OSC}	µA	$\overline{RSTIN}$ = V_{IH1} f_{OSC} in [MHz][1]
Sleep and Power-down mode supply current with RTC running	I_{PDR}[2]	–	200 + 25 × f_{OSC}	µA	V_{DD} = V_{DDmax} f_{OSC} in [MHz][3]
Sleep and Power-down mode supply current with RTC disabled	I_{PDO}	–	50	µA	V_{DD} = V_{DDmax}[3]

1) The supply current is a function of the operating frequency. This dependency is illustrated in **Figure 9**.
These parameters are tested at V_{DDmax} and maximum CPU clock with all outputs disconnected and all inputs at V_{IL} or V_{IH}.

2) This parameter is determined mainly by the current consumed by the oscillator (see **Figure 8**). This current, however, is influenced by the external oscillator circuitry (crystal, capacitors). The values given refer to a typical circuitry and may change in case of a not optimized external oscillator circuitry.

3) This parameter is tested including leakage currents. All inputs (including pins configured as inputs) at 0 V to 0.1 V or at V_{DD} - 0.1 V to V_{DD}, V_{REF} = 0 V, all outputs (including pins configured as outputs) disconnected.

Power Consumption C164CI (OTP)
(Operating Conditions apply)

Parameter	Symbol	Limit Values		Unit	Test Conditions
		min.	max.		
Power supply current (active) with all peripherals active	I_{DD}	–	10 + 3.5 × f_{CPU}	mA	$\overline{RSTIN}$ = V_{IL} f_{CPU} in [MHz][1]
Idle mode supply current with all peripherals active	I_{IDX}	–	5 + 1.25 × f_{CPU}	mA	$\overline{RSTIN}$ = V_{IH1} f_{CPU} in [MHz][1]
Idle mode supply current with all peripherals deactivated, PLL off, SDD factor = 32	I_{IDO}[2]	–	500 + 50 × f_{OSC}	µA	$\overline{RSTIN}$ = V_{IH1} f_{OSC} in [MHz][1]
Sleep and Power-down mode supply current with RTC running	I_{PDR}[2]	–	200 + 25 × f_{OSC}	µA	V_{DD} = V_{DDmax} f_{OSC} in [MHz][3]
Sleep and Power-down mode supply current with RTC disabled	I_{PDO}	–	50	µA	V_{DD} = V_{DDmax}[3]

1) The supply current is a function of the operating frequency. This dependency is illustrated in **Figure 10**. These parameters are tested at V_{DDmax} and maximum CPU clock with all outputs disconnected and all inputs at V_{IL} or V_{IH}.

2) This parameter is determined mainly by the current consumed by the oscillator (see **Figure 8**). This current, however, is influenced by the external oscillator circuitry (crystal, capacitors). The values given refer to a typical circuitry and may change in case of a not optimized external oscillator circuitry.

3) This parameter is tested including leakage currents. All inputs (including pins configured as inputs) at 0 V to 0.1 V or at V_{DD} - 0.1 V to V_{DD}, V_{REF} = 0 V, all outputs (including pins configured as outputs) disconnected.

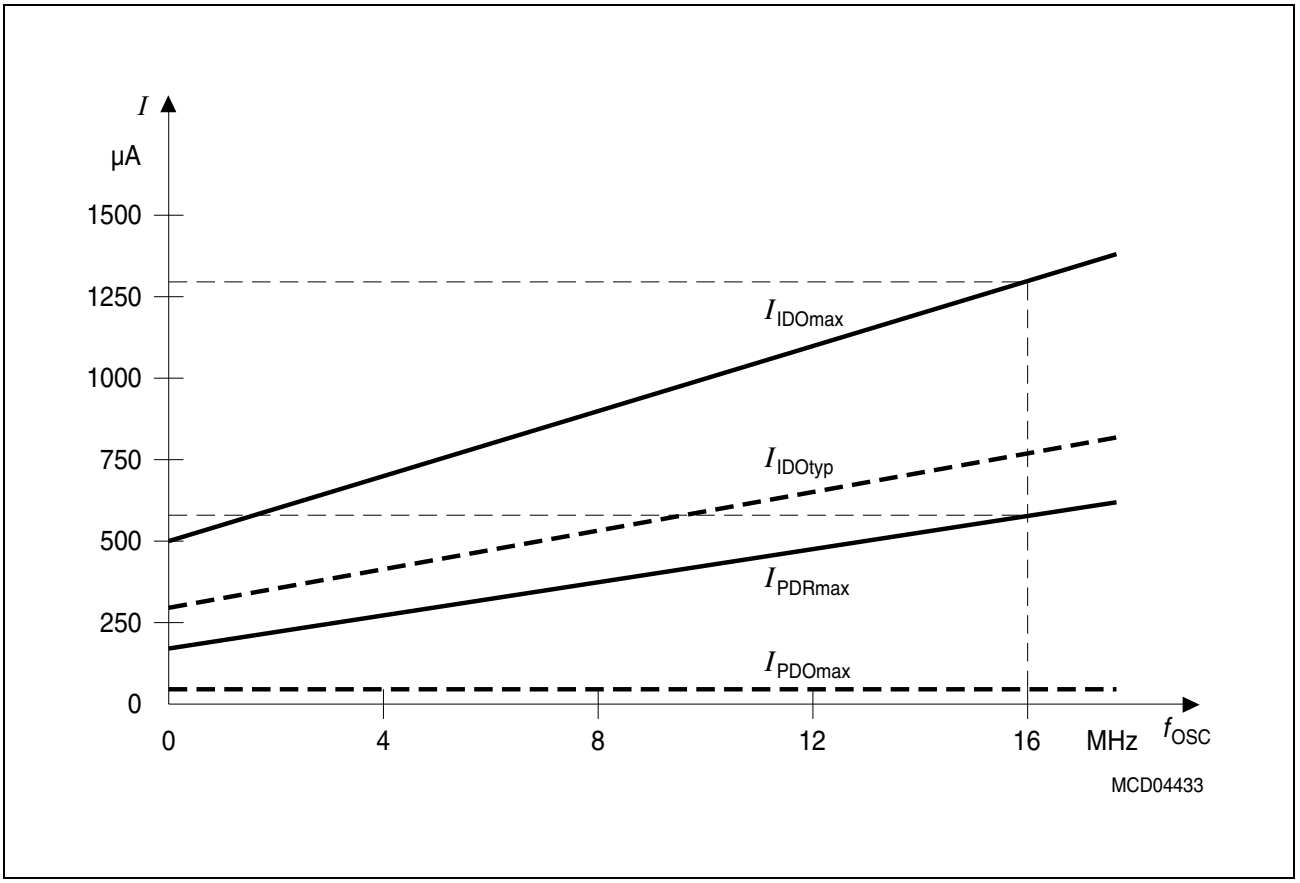

Figure 8 **Idle and Power Down Supply Current as a Function of Oscillator Frequency**

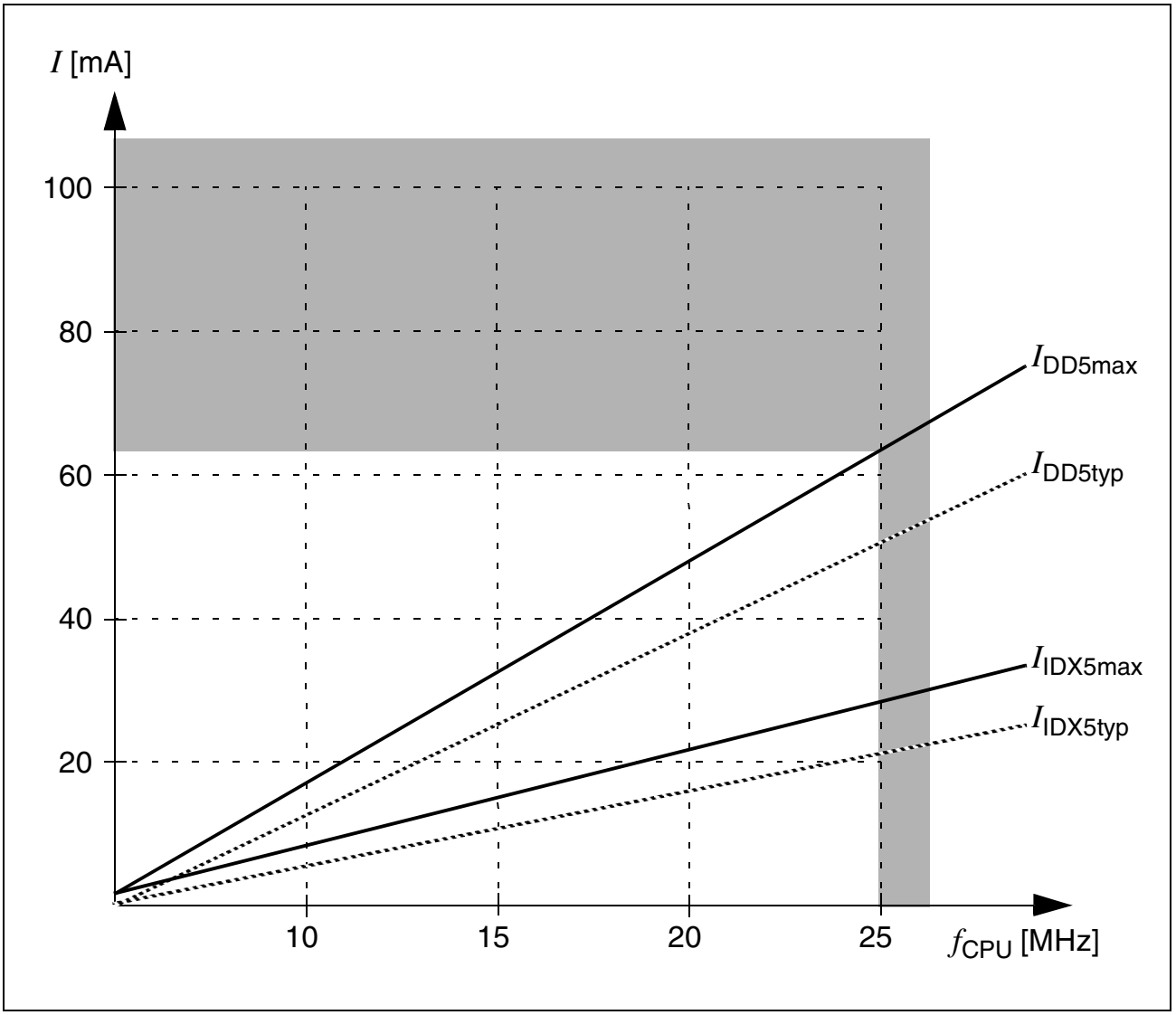

Figure 9 **Supply/Idle Current as a Function of Operating Frequency for ROM Derivatives**

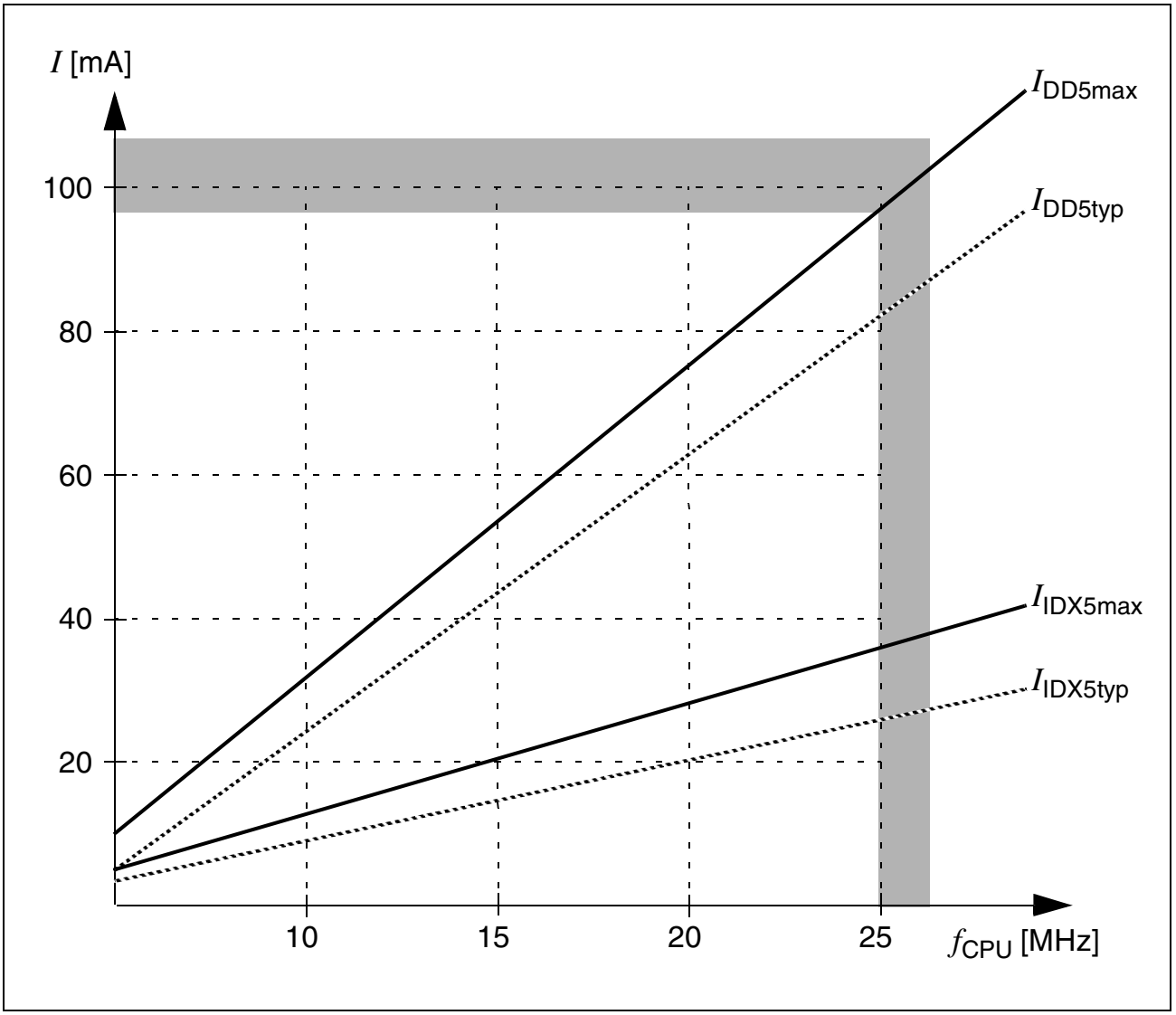

Figure 10 **Supply/Idle Current as a Function of Operating Frequency for OTP Derivatives**

AC Characteristics
Definition of Internal Timing

The internal operation of the C164CI is controlled by the internal CPU clock f_{CPU}. Both edges of the CPU clock can trigger internal (e.g. pipeline) or external (e.g. bus cycles) operations.

The specification of the external timing (AC Characteristics) therefore depends on the time between two consecutive edges of the CPU clock, called “TCL” (see **Figure 11**).

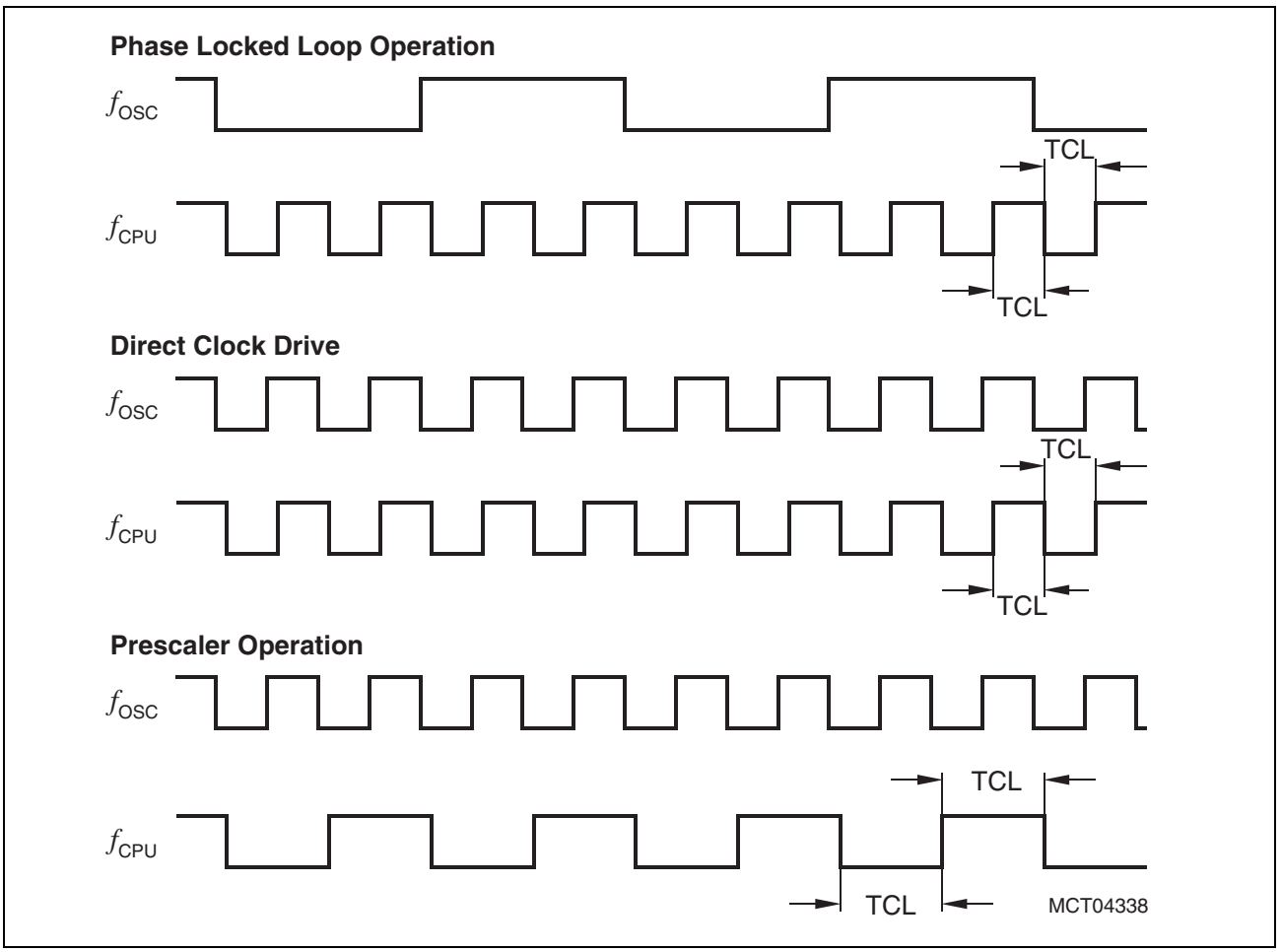

Figure 11 Generation Mechanisms for the CPU Clock

The CPU clock signal f_{CPU} can be generated from the oscillator clock signal f_{OSC} via different mechanisms. The duration of TCLs and their variation (and also the derived external timing) depends on the used mechanism to generate f_{CPU}. This influence must be regarded when calculating the timings for the C164CI.

*Note: The example for PLL operation shown in **Figure 11** refers to a PLL factor of 4.*

The used mechanism to generate the basic CPU clock is selected by bitfield CLKCFG in register RP0H.7-5.
Upon a long hardware reset register RP0H is loaded with the logic levels present on the upper half of PORT0 (P0H), i.e. bitfield CLKCFG represents the logic levels on pins

P0.15-13 (P0H.7-5). Register RP0H can be loaded from the upper half of register RSTCON under software control.

Table 11 associates the combinations of these three bits with the respective clock generation mode.

Table 11 C164CI Clock Generation Modes

CLKCFG[1] (RP0H.7-5)	CPU Frequency $f_{CPU} = f_{OSC} \times F$	External Clock Input Range[2]	Notes
1 1 1	$f_{OSC} \times 4$	2.5 to 6.25 MHz	Default configuration
1 1 0	$f_{OSC} \times 3$	3.33 to 8.33 MHz	–
1 0 1	$f_{OSC} \times 2$	5 to 12.5 MHz	–
1 0 0	$f_{OSC} \times 5$	2 to 5 MHz	–
0 1 1	$f_{OSC} \times 1$	1 to 25 MHz	Direct drive[3]
0 1 0	$f_{OSC} \times 1.5$	6.66 to 16.66 MHz	–
0 0 1	$f_{OSC} / 2$	2 to 50 MHz	CPU clock via prescaler
0 0 0	$f_{OSC} \times 2.5$	4 to 10 MHz	–

1) Please note that pin P0.15 (corresponding to RP0H.7) is inverted in emulation mode, and thus also in EHM.

2) The external clock input range refers to a CPU clock range of 10 … 25 MHz.

3) The maximum frequency depends on the duty cycle of the external clock signal.

Prescaler Operation

When prescaler operation is configured (CLKCFG = 001_B) the CPU clock is derived from the internal oscillator (input clock signal) by a 2:1 prescaler.
The frequency of f_{CPU} is half the frequency of f_{OSC} and the high and low time of f_{CPU} (i.e. the duration of an individual TCL) is defined by the period of the input clock f_{OSC}.

The timings listed in the AC Characteristics that refer to TCLs therefore can be calculated using the period of f_{OSC} for any TCL.

Phase Locked Loop

When PLL operation is configured (via CLKCFG) the on-chip phase locked loop is enabled and provides the CPU clock (see **Table 11**). The PLL multiplies the input frequency by the factor **F** which is selected via the combination of pins P0.15-13 (i.e. $f_{CPU} = f_{OSC} \times \mathbf{F}$). With every **F**'th transition of f_{OSC} the PLL circuit synchronizes the CPU clock to the input clock. This synchronization is done smoothly, i.e. the CPU clock frequency does not change abruptly.

Due to this adaptation to the input clock the frequency of f_{CPU} is constantly adjusted so it is locked to f_{OSC}. The slight variation causes a jitter of f_{CPU} which also effects the duration of individual TCLs.

The timings listed in the AC Characteristics that refer to TCLs therefore must be calculated using the minimum TCL that is possible under the respective circumstances. The actual minimum value for TCL depends on the jitter of the PLL. As the PLL is constantly adjusting its output frequency so it corresponds to the applied input frequency (crystal or oscillator) the relative deviation for periods of more than one TCL is lower than for one single TCL (see formula and **Figure 12**).

For a period of $N \times$ TCL the minimum value is computed using the corresponding deviation D_N:

$$(N \times \mathrm{TCL})_{min} = N \times \mathrm{TCL}_{NOM} - D_N;\ D_N\ [\mathrm{ns}] = \pm(13.3 + N \times 6.3)/f_{CPU}\ [\mathrm{MHz}],$$

where N = number of consecutive TCLs and $1 \le N \le 40$.

So for a period of 3 TCLs @ 25 MHz (i.e. $N = 3$): $D_3 = (13.3 + 3 \times 6.3)/25 = 1.288$ ns, and $(3\mathrm{TCL})_{min} = 3\mathrm{TCL}_{NOM} - 1.288$ ns = 58.7 ns (@ f_{CPU} = 25 MHz).

This is especially important for bus cycles using waitstates and e.g. for the operation of timers, serial interfaces, etc. For all slower operations and longer periods (e.g. pulse train generation or measurement, lower baudrates, etc.) the deviation caused by the PLL jitter is neglectible.

*Note: For all periods longer than 40 TCL the N = 40 value can be used (see **Figure 12**).*

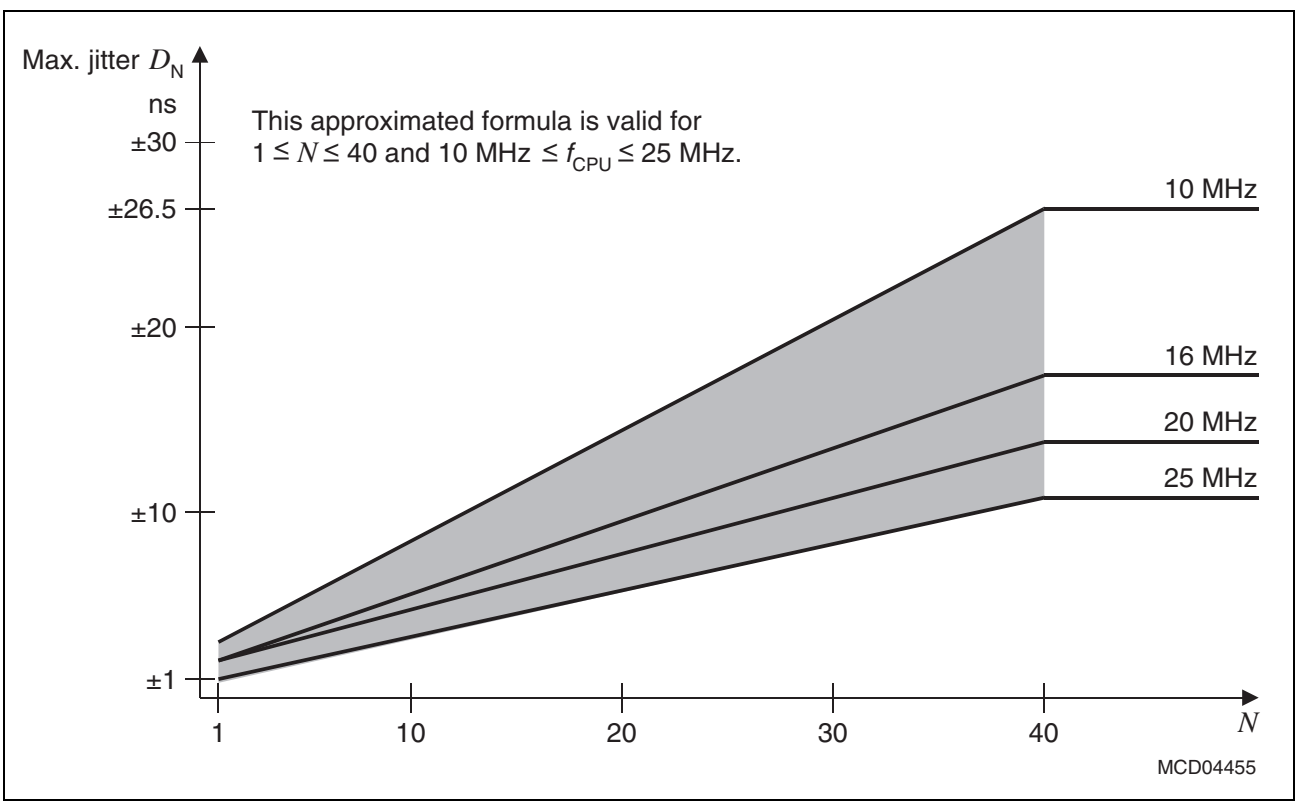

Figure 12 Approximated Maximum Accumulated PLL Jitter

Direct Drive

When direct drive is configured (CLKCFG = 011_B) the on-chip phase locked loop is disabled and the CPU clock is directly driven from the internal oscillator with the input clock signal.
The frequency of f_{CPU} directly follows the frequency of f_{OSC} so the high and low time of f_{CPU} (i.e. the duration of an individual TCL) is defined by the duty cycle of the input clock f_{OSC}.
The timings listed below that refer to TCLs therefore must be calculated using the minimum TCL that is possible under the respective circumstances. This minimum value can be calculated via the following formula:

$$TCL_{min} = 1/f_{OSC} \times DC_{min} \qquad \text{(DC = duty cycle)}$$

For two consecutive TCLs the deviation caused by the duty cycle of f_{OSC} is compensated so the duration of 2TCL is always $1/f_{OSC}$. The minimum value TCL_{min} therefore has to be used only once for timings that require an odd number of TCLs (1, 3, …). Timings that require an even number of TCLs (2, 4, …) may use the formula 2TCL = $1/f_{OSC}$.

AC Characteristics
External Clock Drive XTAL1
(Operating Conditions apply)

Table 12 External Clock Drive Characteristics

Parameter	Symbol		Direct Drive 1:1		Prescaler 2:1		PLL 1:N		Unit
			min.	max.	min.	max.	min.	max.	
Oscillator period	t_{OSC}	SR	40	–	20	–	60[1)]	500[1)]	ns
High time[2)]	t_1	SR	20[3)]	–	6	–	10	–	ns
Low time[2)]	t_2	SR	20[3)]	–	6	–	10	–	ns
Rise time[2)]	t_3	SR	–	8	–	5	–	10	ns
Fall time[2)]	t_4	SR	–	8	–	5	–	10	ns

1) The minimum and maximum oscillator periods for PLL operation depend on the selected CPU clock generation mode. Please see respective table above.

2) The clock input signal must reach the defined levels V_{IL2} and V_{IH2}.

3) The minimum high and low time refers to a duty cycle of 50%. The maximum operating freqency (f_{CPU}) in direct drive mode depends on the duty cycle of the clock input signal.

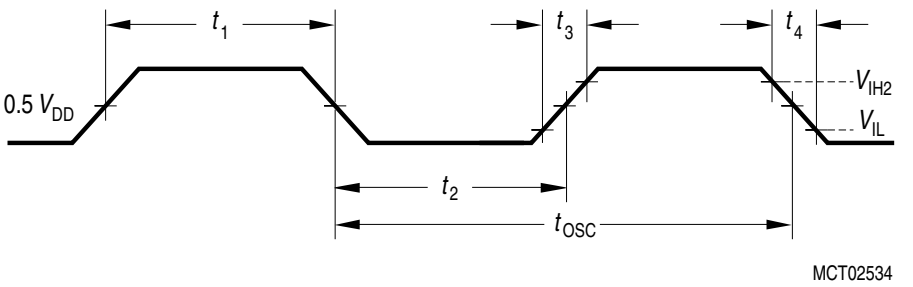

Figure 13 External Clock Drive XTAL1

Note: If the on-chip oscillator is used together with a crystal, the oscillator frequency is limited to a range of 4 MHz to 16 MHz.
It is strongly recommended to measure the oscillation allowance (or margin) in the final target system (layout) to determine the optimum parameters for the oscillator operation. Please refer to the limits specified by the crystal supplier.
When driven by an external clock signal it will accept the specified frequency range. Operation at lower input frequencies is possible but is guaranteed by design only (not 100% tested).

A/D Converter Characteristics

(Operating Conditions apply)

Table 13 A/D Converter Characteristics

Parameter	Symbol		Limit Values		Unit	Test Conditions
			min.	max.		
Analog reference supply	V_{AREF}	SR	4.0	V_{DD} + 0.1	V	1)
Analog reference ground	V_{AGND}	SR	V_{SS} - 0.1	V_{SS} + 0.2	V	–
Analog input voltage range	V_{AIN}	SR	V_{AGND}	V_{AREF}	V	2)
Basic clock frequency	f_{BC}		0.5	6.25	MHz	3)
Conversion time	t_C	CC	–	40 t_{BC} + t_S + 2t_{CPU}	–	4) t_{CPU} = 1 / f_{CPU}
Calibration time after reset	t_{CAL}	CC	–	3328 t_{BC}	–	5)
Total unadjusted error	TUE	CC	–	±2	LSB	1)
Internal resistance of reference voltage source	R_{AREF}	SR	–	t_{BC} / 60 - 0.25	kΩ	t_{BC} in [ns]6)7)
Internal resistance of analog source	R_{ASRC}	SR	–	t_S / 450 - 0.25	kΩ	t_S in [ns]7)8)
ADC input capacitance	C_{AIN}	CC	–	33	pF	7)

1) TUE is tested at V_{AREF} = 5.0 V, V_{AGND} = 0 V, V_{DD} = 4.9 V. It is guaranteed by design for all other voltages within the defined voltage range.
If the analog reference supply voltage exceeds the power supply voltage by up to 0.2 V (i.e. V_{AREF} = V_{DD} = +0.2 V) the maximum TUE is increased to ±3 LSB. This range is not 100% tested.
The specified TUE is guaranteed only if the absolute sum of input overload currents on Port 5 pins (see I_{OV} specification) does not exceed 10 mA.
During the reset calibration sequence the maximum TUE may be ±4 LSB.

2) V_{AIN} may exceed V_{AGND} or V_{AREF} up to the absolute maximum ratings. However, the conversion result in these cases will be $X000_H$ or $X3FF_H$, respectively.

3) The limit values for f_{BC} must not be exceeded when selecting the CPU frequency and the ADCTC setting.

4) This parameter includes the sample time t_S, the time for determining the digital result and the time to load the result register with the conversion result.
Values for the basic clock t_{BC} depend on programming and can be taken from **Table 14**.
This parameter depends on the ADC control logic. It is not a real maximum value, but rather a fixum.

5) During the reset calibration conversions can be executed (with the current accuracy). The time required for these conversions is added to the total reset calibration time.

6) During the conversion the ADC's capacitance must be repeatedly charged or discharged. The internal resistance of the reference voltage source must allow the capacitance to reach its respective voltage level within each conversion step. The maximum internal resistance results from the programmed conversion timing.

7) Not 100% tested, guaranteed by design and characterization.

8) During the sample time the input capacitance C_{AIN} can be charged/discharged by the external source. The internal resistance of the analog source must allow the capacitance to reach its final voltage level within t_S. After the end of the sample time t_S, changes of the analog input voltage have no effect on the conversion result. Values for the sample time t_S depend on programming and can be taken from **Table 14**.

Sample time and conversion time of the C164CI's A/D Converter are programmable. **Table 14** should be used to calculate the above timings.
The limit values for f_{BC} must not be exceeded when selecting ADCTC.

Table 14 A/D Converter Computation Table

ADCON.15|14 (ADCTC)	A/D Converter Basic Clock f_{BC}	ADCON.13|12 (ADSTC)	Sample time t_S
00	f_{CPU} / 4	00	$t_{BC} \times 8$
01	f_{CPU} / 2	01	$t_{BC} \times 16$
10	f_{CPU} / 16	10	$t_{BC} \times 32$
11	f_{CPU} / 8	11	$t_{BC} \times 64$

Converter Timing Example:

Assumptions: f_{CPU} = 25 MHz (i.e. t_{CPU} = 40 ns), ADCTC = '00', ADSTC = '00'.
Basic clock f_{BC} = f_{CPU}/4 = 6.25 MHz, i.e. t_{BC} = 160 ns.
Sample time t_S = $t_{BC} \times 8$ = 1280 ns.
Conversion time t_C = t_S + 40 t_{BC} + 2 t_{CPU} = (1280 + 6400 + 80) ns = 7.8 µs.

Testing Waveforms

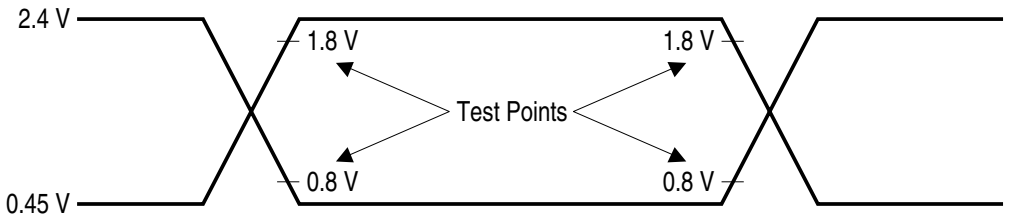

AC inputs during testing are driven at 2.4 V for a logic '1' and 0.45 V for a logic '0'.
Timing measurements are made at V_{IH} min for a logic '1' and V_{IL} max for a logic '0'.

MCA04414

Figure 14 Input Output Waveforms

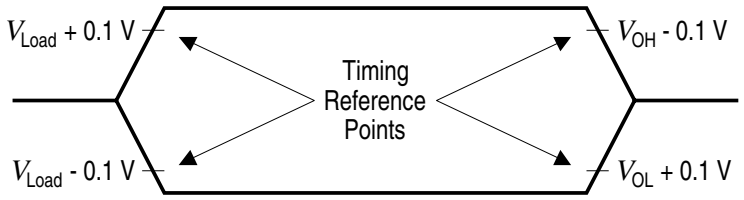

For timing purposes a port pin is no longer floating when a 100 mV change from load voltage occurs, but begins to float when a 100 mV change from the loaded V_{OH} / V_{OL} level occurs (I_{OH} / I_{OL} = 20 mA).

MCA00763

Figure 15 Float Waveforms

Memory Cycle Variables

The timing tables below use three variables which are derived from the BUSCONx registers and represent the special characteristics of the programmed memory cycle. The following table describes, how these variables are to be computed.

Table 15 Memory Cycle Variables

Description	Symbol	Values
ALE Extension	t_A	TCL × <ALECTL>
Memory Cycle Time Waitstates	t_C	2TCL × (15 - <MCTC>)
Memory Tristate Time	t_F	2TCL × (1 - <MTTC>)

Note: Please respect the maximum operating frequency of the respective derivative.

AC Characteristics

Multiplexed Bus

(Operating Conditions apply)

ALE cycle time = 6 TCL + $2t_A + t_C + t_F$ (120 ns at 25 MHz CPU clock without waitstates)

Parameter	Symbol		Max. CPU Clock = 25 MHz		Variable CPU Clock 1 / 2TCL = 1 to 25 MHz		Unit
			min.	max.	min.	max.	
ALE high time	t_5	CC	$10 + t_A$	–	TCL - 10 $+ t_A$	–	ns
Address setup to ALE	t_6	CC	$4 + t_A$	–	TCL - 16 $+ t_A$	–	ns
Address hold after ALE	t_7	CC	$10 + t_A$	–	TCL - 10 $+ t_A$	–	ns
ALE falling edge to $\overline{RD}$, $\overline{WR}$ (with RW-delay)	t_8	CC	$10 + t_A$	–	TCL - 10 $+ t_A$	–	ns
ALE falling edge to $\overline{RD}$, $\overline{WR}$ (no RW-delay)	t_9	CC	$-10 + t_A$	–	$-10 + t_A$	–	ns
Address float after $\overline{RD}$, $\overline{WR}$ (with RW-delay)	t_{10}	CC	–	6	–	6	ns
Address float after $\overline{RD}$, $\overline{WR}$ (no RW-delay)	t_{11}	CC	–	26	–	TCL + 6	ns
$\overline{RD}$, $\overline{WR}$ low time (with RW-delay)	t_{12}	CC	$30 + t_C$	–	2TCL - 10 $+ t_C$	–	ns

Multiplexed Bus (cont'd)
(Operating Conditions apply)
ALE cycle time = 6 TCL + $2t_A + t_C + t_F$ (120 ns at 25 MHz CPU clock without waitstates)

Parameter	Symbol		Max. CPU Clock = 25 MHz		Variable CPU Clock 1 / 2TCL = 1 to 25 MHz		Unit
			min.	max.	min.	max.	
$\overline{RD}$, $\overline{WR}$ low time (no RW-delay)	t_{13}	CC	50 + t_C	–	3TCL - 10 + t_C	–	ns
$\overline{RD}$ to valid data in (with RW-delay)	t_{14}	SR	–	20 + t_C	–	2TCL - 20 + t_C	ns
$\overline{RD}$ to valid data in (no RW-delay)	t_{15}	SR	–	40 + t_C	–	3TCL - 20 + t_C	ns
ALE low to valid data in	t_{16}	SR	–	40 + t_A + t_C	–	3TCL - 20 + t_A + t_C	ns
Address to valid data in	t_{17}	SR	–	50 + $2t_A$ + t_C	–	4TCL - 30 + $2t_A$ + t_C	ns
Data hold after $\overline{RD}$ rising edge	t_{18}	SR	0	–	0	–	ns
Data float after $\overline{RD}$	t_{19}	SR	–	26 + t_F	–	2TCL - 14 + t_F	ns
Data valid to $\overline{WR}$	t_{22}	CC	20 + t_C	–	2TCL - 20 + t_C	–	ns
Data hold after $\overline{WR}$	t_{23}	CC	26 + t_F	–	2TCL - 14 + t_F	–	ns
ALE rising edge after $\overline{RD}$, $\overline{WR}$	t_{25}	CC	26 + t_F	–	2TCL - 14 + t_F	–	ns
Address hold after $\overline{RD}$, $\overline{WR}$	t_{27}	CC	26 + t_F	–	2TCL - 14 + t_F	–	ns
ALE falling edge to $\overline{CS}$[1)]	t_{38}	CC	-4 - t_A	10 - t_A	-4 - t_A	10 - t_A	ns
$\overline{CS}$ low to Valid Data In[1)]	t_{39}	SR	–	40 + t_C + $2t_A$	–	3TCL - 20 + t_C + $2t_A$	ns
$\overline{CS}$ hold after $\overline{RD}$, $\overline{WR}$[1)]	t_{40}	CC	46 + t_F	–	3TCL - 14 + t_F	–	ns
ALE fall. edge to $\overline{RdCS}$, $\overline{WrCS}$ (with RW delay)	t_{42}	CC	16 + t_A	–	TCL - 4 + t_A	–	ns

Multiplexed Bus (cont'd)
(Operating Conditions apply)
ALE cycle time = 6 TCL + $2t_A + t_C + t_F$ (120 ns at 25 MHz CPU clock without waitstates)

Parameter	Symbol		Max. CPU Clock = 25 MHz		Variable CPU Clock 1 / 2TCL = 1 to 25 MHz		Unit
			min.	max.	min.	max.	
ALE fall. edge to $\overline{\text{RdCS}}$, $\overline{\text{WrCS}}$ (no RW delay)	t_{43}	CC	-4 + t_A	–	-4 + t_A	–	ns
Address float after $\overline{\text{RdCS}}$, $\overline{\text{WrCS}}$ (with RW delay)	t_{44}	CC	–	0	–	0	ns
Address float after $\overline{\text{RdCS}}$, $\overline{\text{WrCS}}$ (no RW delay)	t_{45}	CC	–	20	–	TCL	ns
$\overline{\text{RdCS}}$ to Valid Data In (with RW delay)	t_{46}	SR	–	16 + t_C	–	2TCL - 24 + t_C	ns
$\overline{\text{RdCS}}$ to Valid Data In (no RW delay)	t_{47}	SR	–	36 + t_C	–	3TCL - 24 + t_C	ns
$\overline{\text{RdCS}}$, $\overline{\text{WrCS}}$ Low Time (with RW delay)	t_{48}	CC	30 + t_C	–	2TCL - 10 + t_C	–	ns
$\overline{\text{RdCS}}$, $\overline{\text{WrCS}}$ Low Time (no RW delay)	t_{49}	CC	50 + t_C	–	3TCL - 10 + t_C	–	ns
Data valid to $\overline{\text{WrCS}}$	t_{50}	CC	26 + t_C	–	2TCL - 14 + t_C	–	ns
Data hold after $\overline{\text{RdCS}}$	t_{51}	SR	0	–	0	–	ns
Data float after $\overline{\text{RdCS}}$	t_{52}	SR	–	20 + t_F	–	2TCL - 20 + t_F	ns
Address hold after $\overline{\text{RdCS}}$, $\overline{\text{WrCS}}$	t_{54}	CC	20 + t_F	–	2TCL - 20 + t_F	–	ns
Data hold after $\overline{\text{WrCS}}$	t_{56}	CC	20 + t_F	–	2TCL - 20 + t_F	–	ns

1) These parameters refer to the latched chip select signals ($\overline{\text{CSxL}}$). The early chip select signals ($\overline{\text{CSxE}}$) are specified together with the address and signal $\overline{\text{BHE}}$ (see figures below).

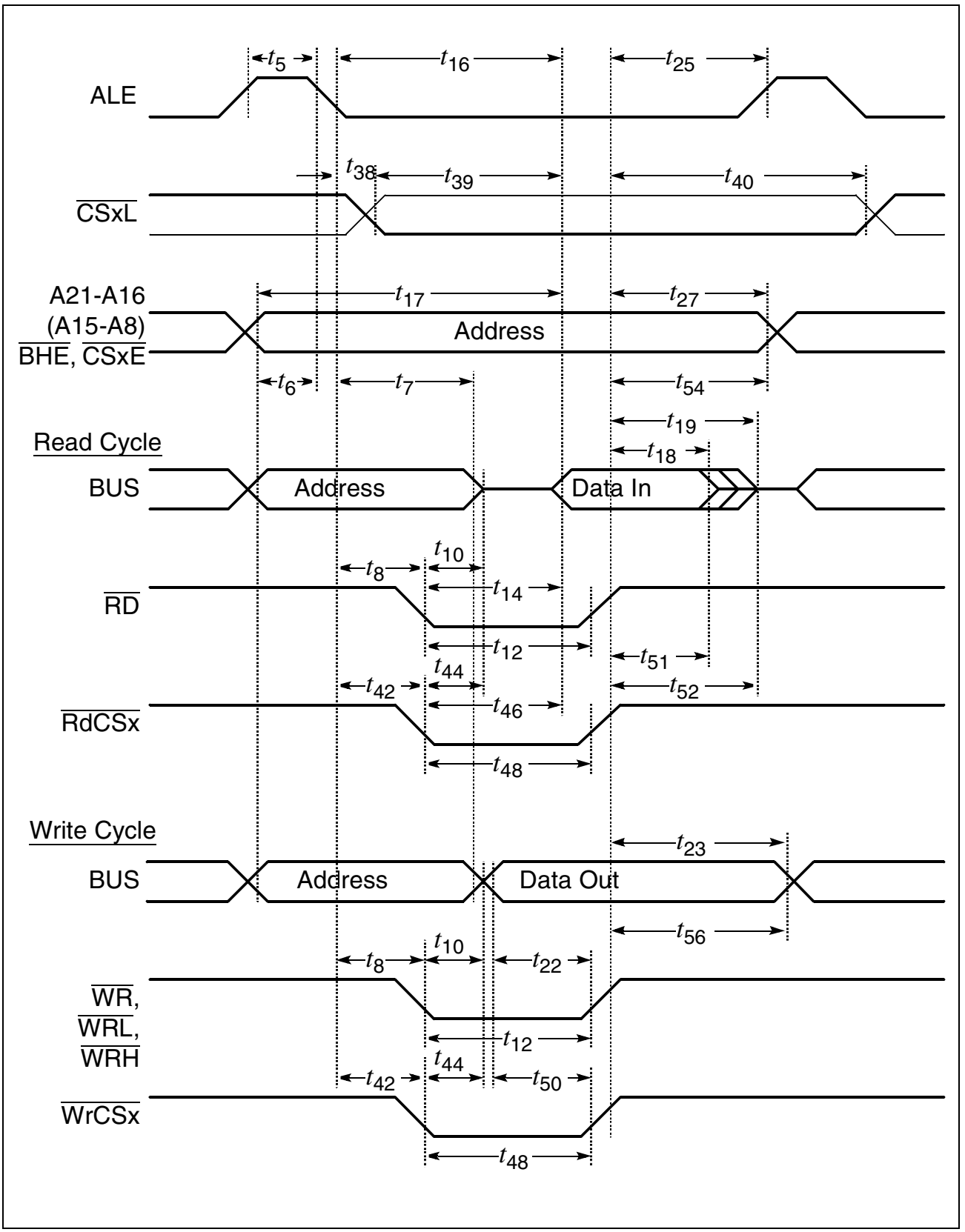

Figure 16 **External Memory Cycle:**
Multiplexed Bus, With Read/Write Delay, Normal ALE

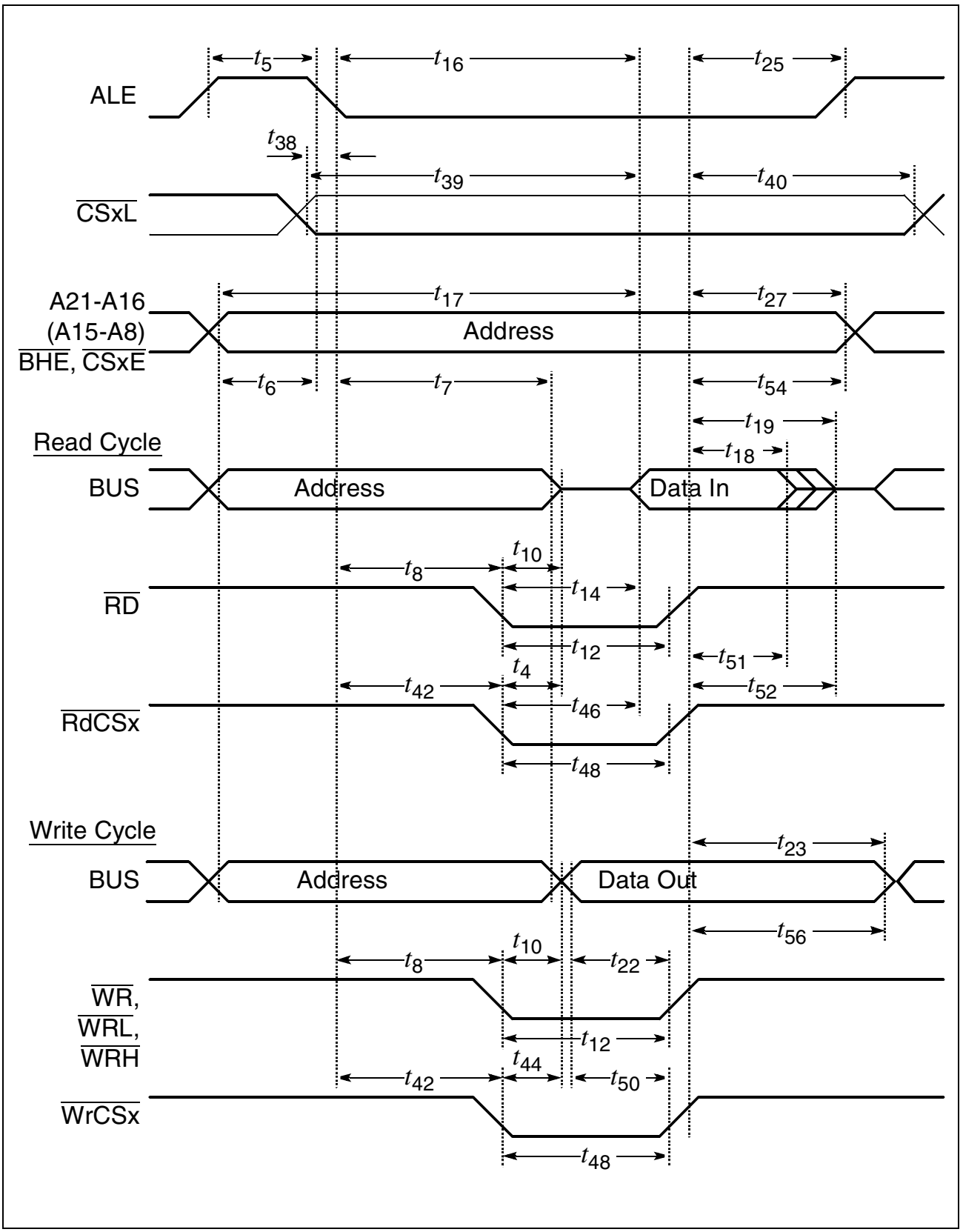

Figure 17 **External Memory Cycle:**
Multiplexed Bus, With Read/Write Delay, Extended ALE

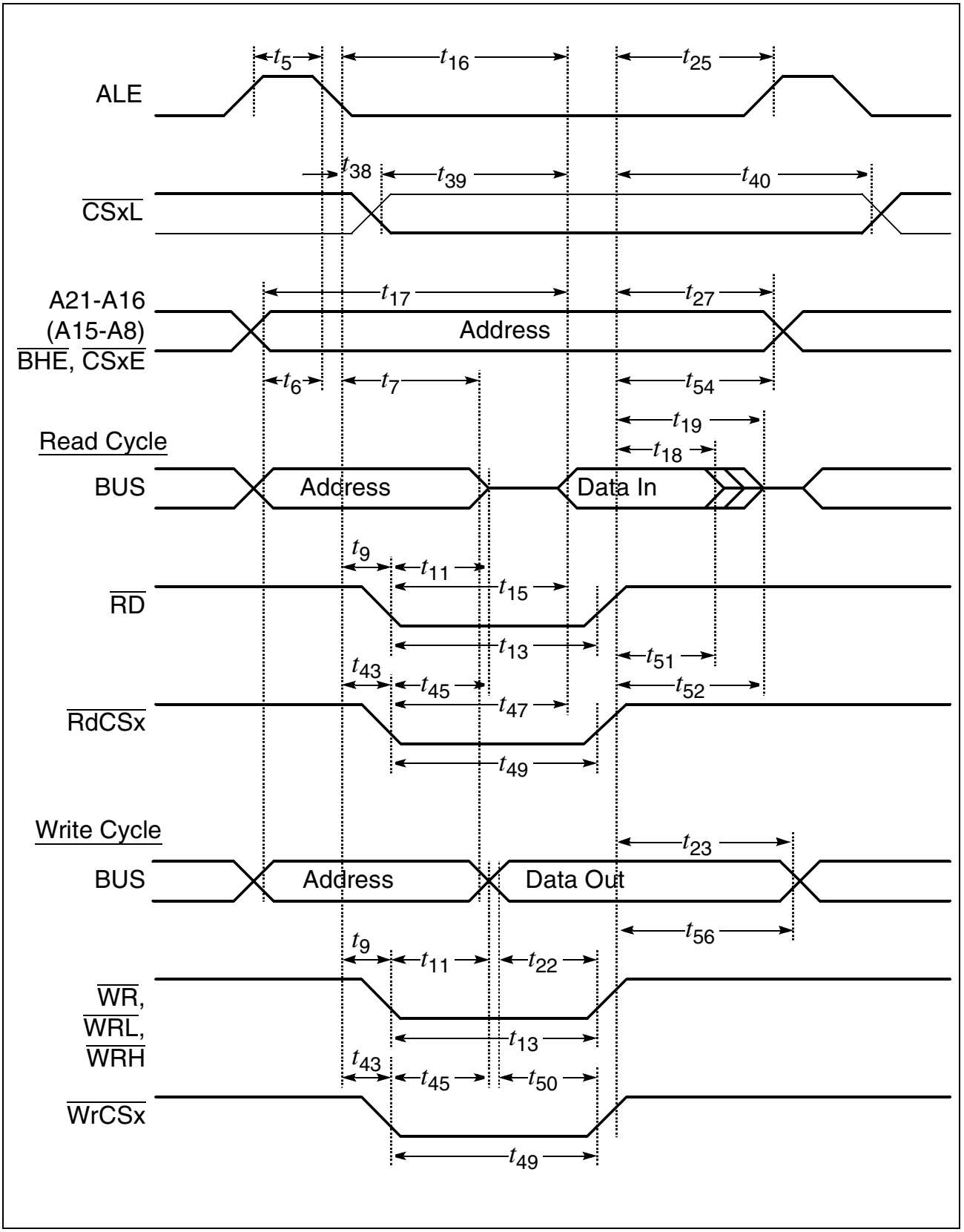

Figure 18 **External Memory Cycle:**
Multiplexed Bus, No Read/Write Delay, Normal ALE

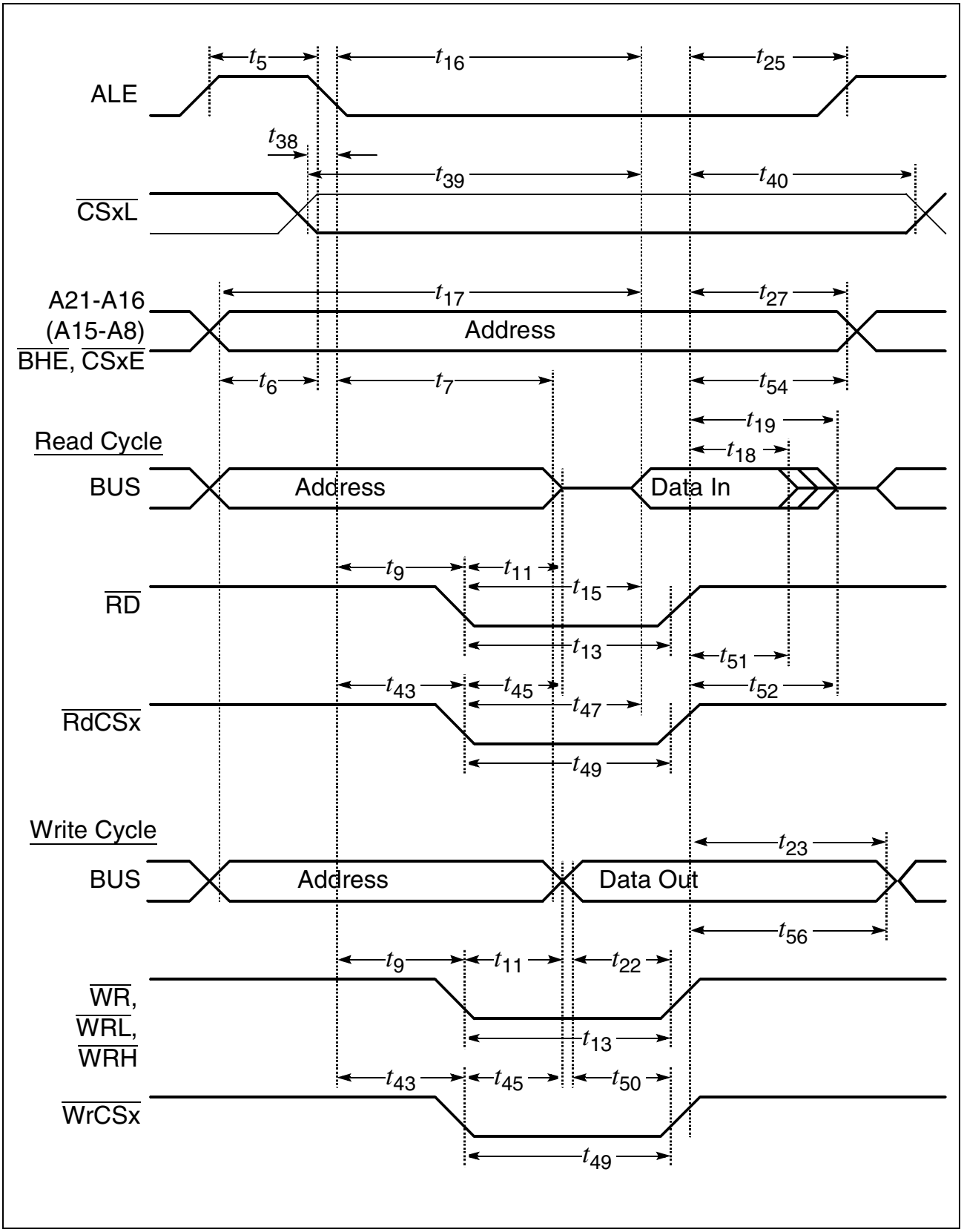

Figure 19 **External Memory Cycle:**
Multiplexed Bus, No Read/Write Delay, Extended ALE

AC Characteristics

Demultiplexed Bus

(Operating Conditions apply)

ALE cycle time = 4 TCL + $2t_A + t_C + t_F$ (80 ns at 25 MHz CPU clock without waitstates)

Parameter	Symbol		Max. CPU Clock = 25 MHz		Variable CPU Clock 1 / 2TCL = 1 to 25 MHz		Unit
			min.	max.	min.	max.	
ALE high time	t_5	CC	$10 + t_A$	–	TCL - 10 $+ t_A$	–	ns
Address setup to ALE	t_6	CC	$4 + t_A$	–	TCL - 16 $+ t_A$	–	ns
ALE falling edge to $\overline{RD}$, $\overline{WR}$ (with RW-delay)	t_8	CC	$10 + t_A$	–	TCL - 10 $+ t_A$	–	ns
ALE falling edge to $\overline{RD}$, $\overline{WR}$ (no RW-delay)	t_9	CC	$-10 + t_A$	–	-10 $+ t_A$	–	ns
$\overline{RD}$, $\overline{WR}$ low time (with RW-delay)	t_{12}	CC	$30 + t_C$	–	2TCL - 10 $+ t_C$	–	ns
$\overline{RD}$, $\overline{WR}$ low time (no RW-delay)	t_{13}	CC	$50 + t_C$	–	3TCL - 10 $+ t_C$	–	ns
$\overline{RD}$ to valid data in (with RW-delay)	t_{14}	SR	–	$20 + t_C$	–	2TCL - 20 $+ t_C$	ns
$\overline{RD}$ to valid data in (no RW-delay)	t_{15}	SR	–	$40 + t_C$	–	3TCL - 20 $+ t_C$	ns
ALE low to valid data in	t_{16}	SR	–	$40 + t_A + t_C$	–	3TCL - 20 $+ t_A + t_C$	ns
Address to valid data in	t_{17}	SR	–	$50 + 2t_A + t_C$	–	4TCL - 30 $+ 2t_A + t_C$	ns
Data hold after $\overline{RD}$ rising edge	t_{18}	SR	0	–	0	–	ns
Data float after $\overline{RD}$ rising edge (with RW-delay[1)])	t_{20}	SR	–	$26 + 2t_A + t_F$[1)]	–	2TCL - 14 $+ 22t_A + t_F$[1)]	ns
Data float after $\overline{RD}$ rising edge (no RW-delay[1)])	t_{21}	SR	–	$10 + 2t_A + t_F$[1)]	–	TCL - 10 $+ 22t_A + t_F$[1)]	ns

Demultiplexed Bus (cont'd)
(Operating Conditions apply)
ALE cycle time = 4 TCL + $2t_A + t_C + t_F$ (80 ns at 25 MHz CPU clock without waitstates)

Parameter	Symbol		Max. CPU Clock = 25 MHz		Variable CPU Clock 1 / 2TCL = 1 to 25 MHz		Unit
			min.	max.	min.	max.	
Data valid to $\overline{WR}$	t_{22}	CC	$20 + t_C$	–	$2TCL - 20 + t_C$	–	ns
Data hold after $\overline{WR}$	t_{24}	CC	$10 + t_F$	–	$TCL - 10 + t_F$	–	ns
ALE rising edge after $\overline{RD}$, $\overline{WR}$	t_{26}	CC	$-10 + t_F$	–	$-10 + t_F$	–	ns
Address hold after $\overline{WR}$[2)]	t_{28}	CC	$0 + t_F$	–	$0 + t_F$	–	ns
ALE falling edge to $\overline{CS}$[3)]	t_{38}	CC	$-4 - t_A$	$10 - t_A$	$-4 - t_A$	$10 - t_A$	ns
$\overline{CS}$ low to Valid Data In[3)]	t_{39}	SR	–	$40 + t_C + 2t_A$	–	$3TCL - 20 + t_C + 2t_A$	ns
$\overline{CS}$ hold after $\overline{RD}$, $\overline{WR}$[3)]	t_{41}	CC	$6 + t_F$	–	$TCL - 14 + t_F$	–	ns
ALE falling edge to $\overline{RdCS}$, $\overline{WrCS}$ (with RW-delay)	t_{42}	CC	$16 + t_A$	–	$TCL - 4 + t_A$	–	ns
ALE falling edge to $\overline{RdCS}$, $\overline{WrCS}$ (no RW-delay)	t_{43}	CC	$-4 + t_A$	–	$-4 + t_A$	–	ns
$\overline{RdCS}$ to Valid Data In (with RW-delay)	t_{46}	SR	–	$16 + t_C$	–	$2TCL - 24 + t_C$	ns
$\overline{RdCS}$ to Valid Data In (no RW-delay)	t_{47}	SR	–	$36 + t_C$	–	$3TCL - 24 + t_C$	ns
$\overline{RdCS}$, $\overline{WrCS}$ Low Time (with RW-delay)	t_{48}	CC	$30 + t_C$	–	$2TCL - 10 + t_C$	–	ns
$\overline{RdCS}$, $\overline{WrCS}$ Low Time (no RW-delay)	t_{49}	CC	$50 + t_C$	–	$3TCL - 10 + t_C$	–	ns
Data valid to $\overline{WrCS}$	t_{50}	CC	$26 + t_C$	–	$2TCL - 14 + t_C$	–	ns
Data hold after $\overline{RdCS}$	t_{51}	SR	0	–	0	–	ns
Data float after $\overline{RdCS}$ (with RW-delay)[1)]	t_{53}	SR	–	$20 + t_F$	–	$2TCL - 20 + 2t_A + t_F$[1)]	ns

Demultiplexed Bus (cont'd)
(Operating Conditions apply)
ALE cycle time = 4 TCL + $2t_A + t_C + t_F$ (80 ns at 25 MHz CPU clock without waitstates)

Parameter	Symbol		Max. CPU Clock = 25 MHz		Variable CPU Clock 1 / 2TCL = 1 to 25 MHz		Unit
			min.	max.	min.	max.	
Data float after $\overline{\text{RdCS}}$ (no RW-delay)[1]	t_{68}	SR	–	$0 + t_F$	–	TCL - 20 $+ 2t_A + t_F$[1]	ns
Address hold after $\overline{\text{RdCS}}$, $\overline{\text{WrCS}}$	t_{55}	CC	$-6 + t_F$	–	$-6 + t_F$	–	ns
Data hold after $\overline{\text{WrCS}}$	t_{57}	CC	$6 + t_F$	–	TCL - 14 + t_F	–	ns

1) RW-delay and t_A refer to the next following bus cycle (including an access to an on-chip X-Peripheral).

2) Read data are latched with the same clock edge that triggers the address change and the rising $\overline{\text{RD}}$ edge. Therefore address changes before the end of $\overline{\text{RD}}$ have no impact on read cycles.

3) These parameters refer to the latched chip select signals ($\overline{\text{CSxL}}$). The early chip select signals ($\overline{\text{CSxE}}$) are specified together with the address and signal $\overline{\text{BHE}}$ (see figures below).

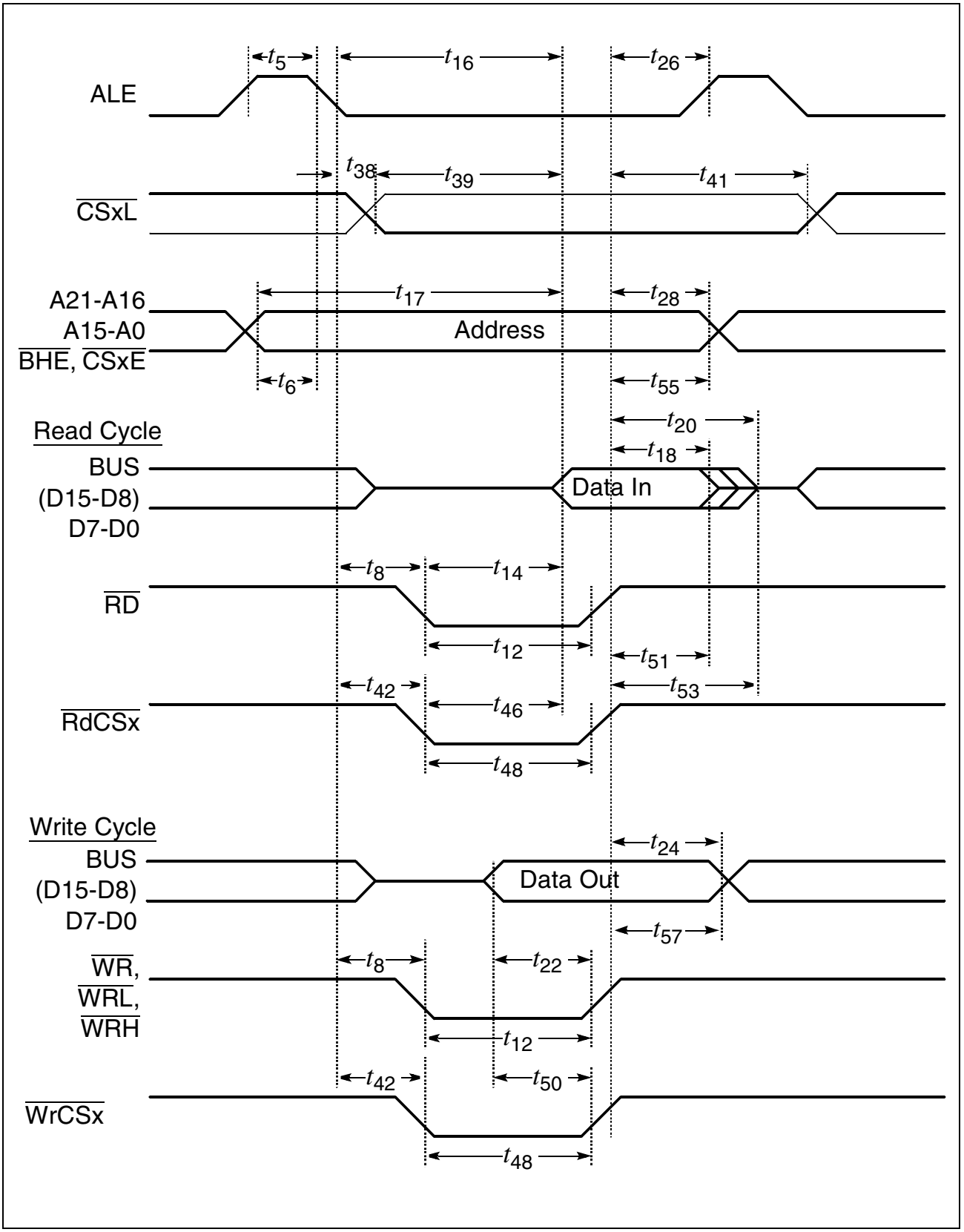

Figure 20 **External Memory Cycle: Demultiplexed Bus, With Read/Write Delay, Normal ALE**

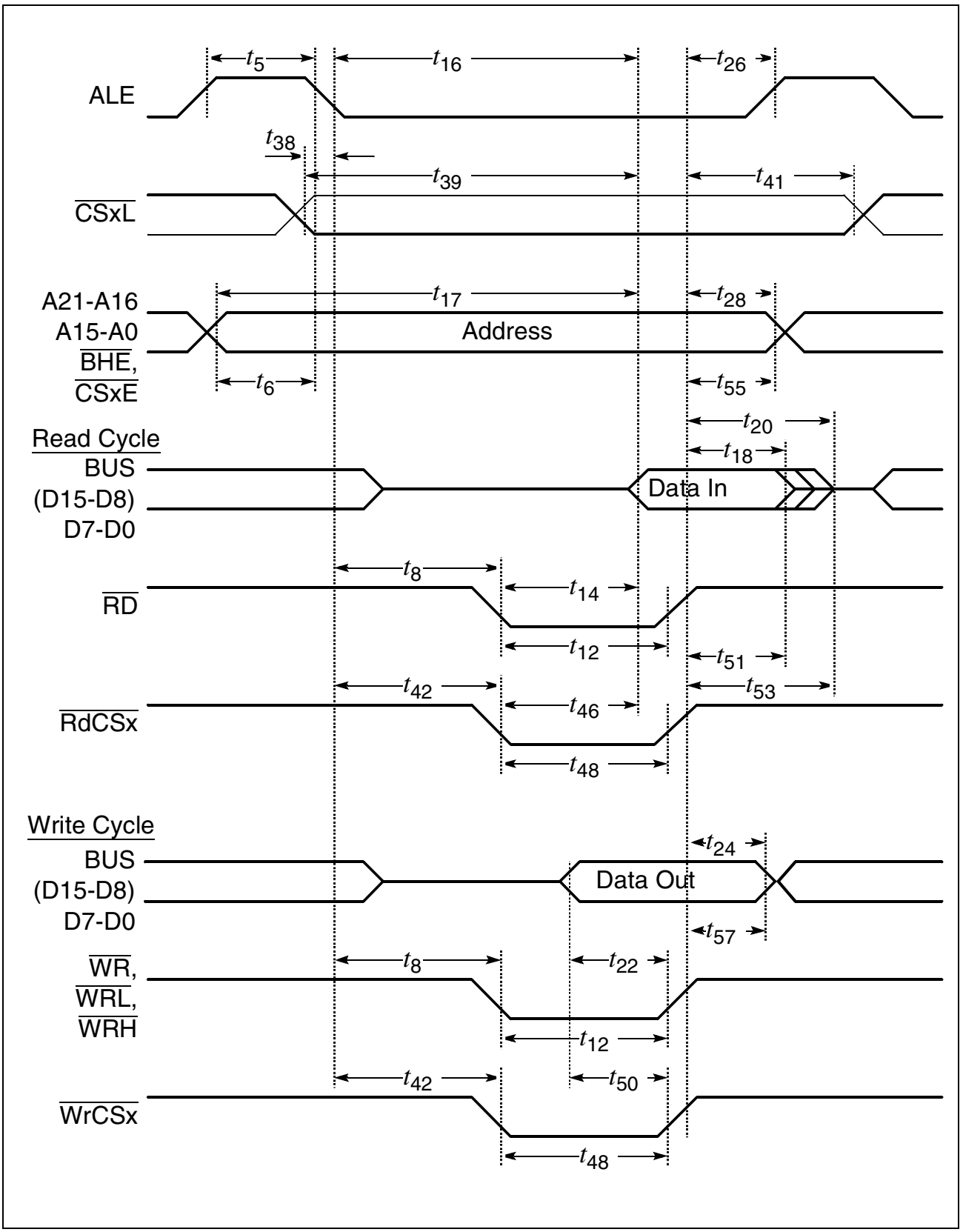

Figure 21 **External Memory Cycle:**
Demultiplexed Bus, With Read/Write Delay, Extended ALE

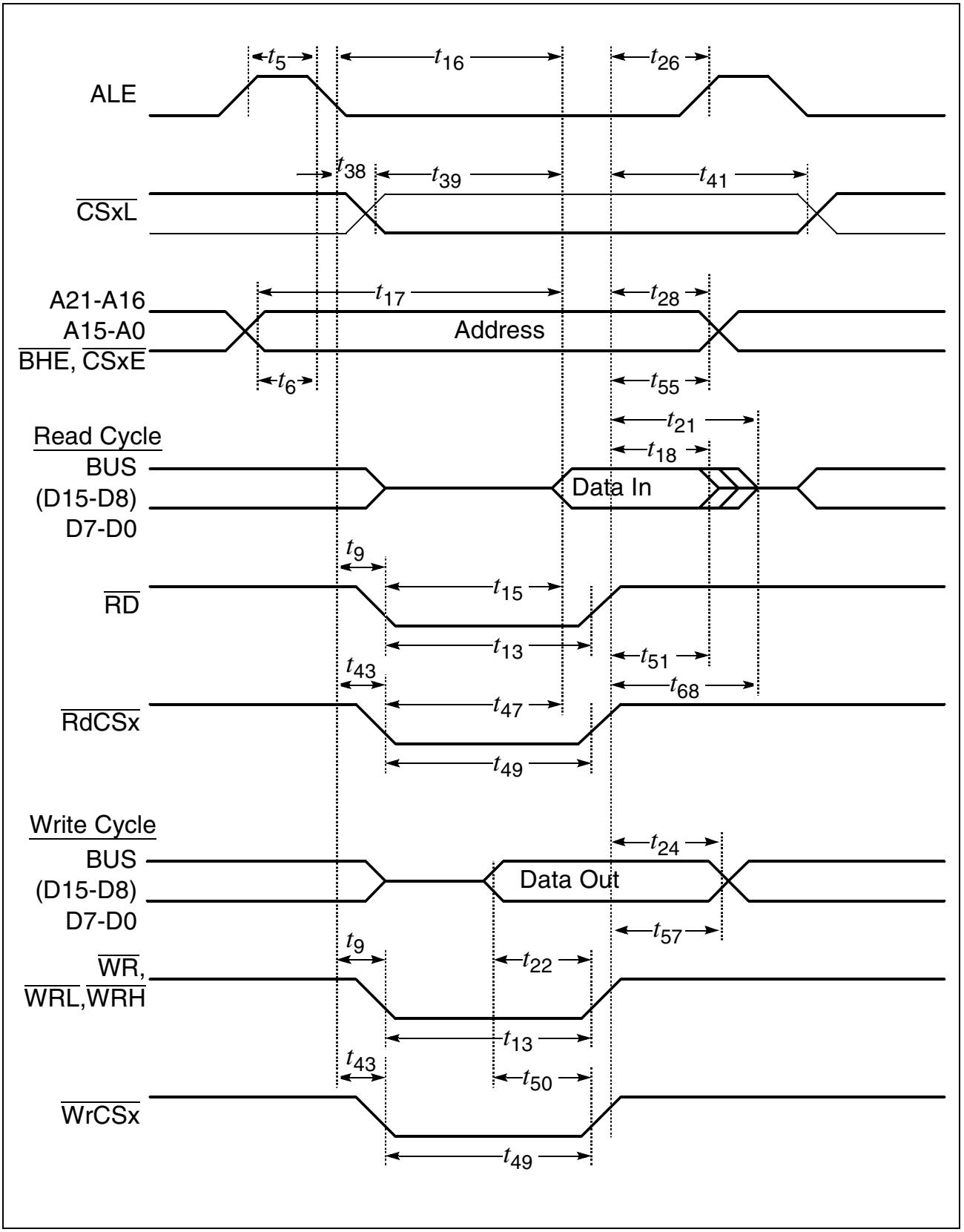

Figure 22 **External Memory Cycle: Demultiplexed Bus, No Read/Write Delay, Normal ALE**

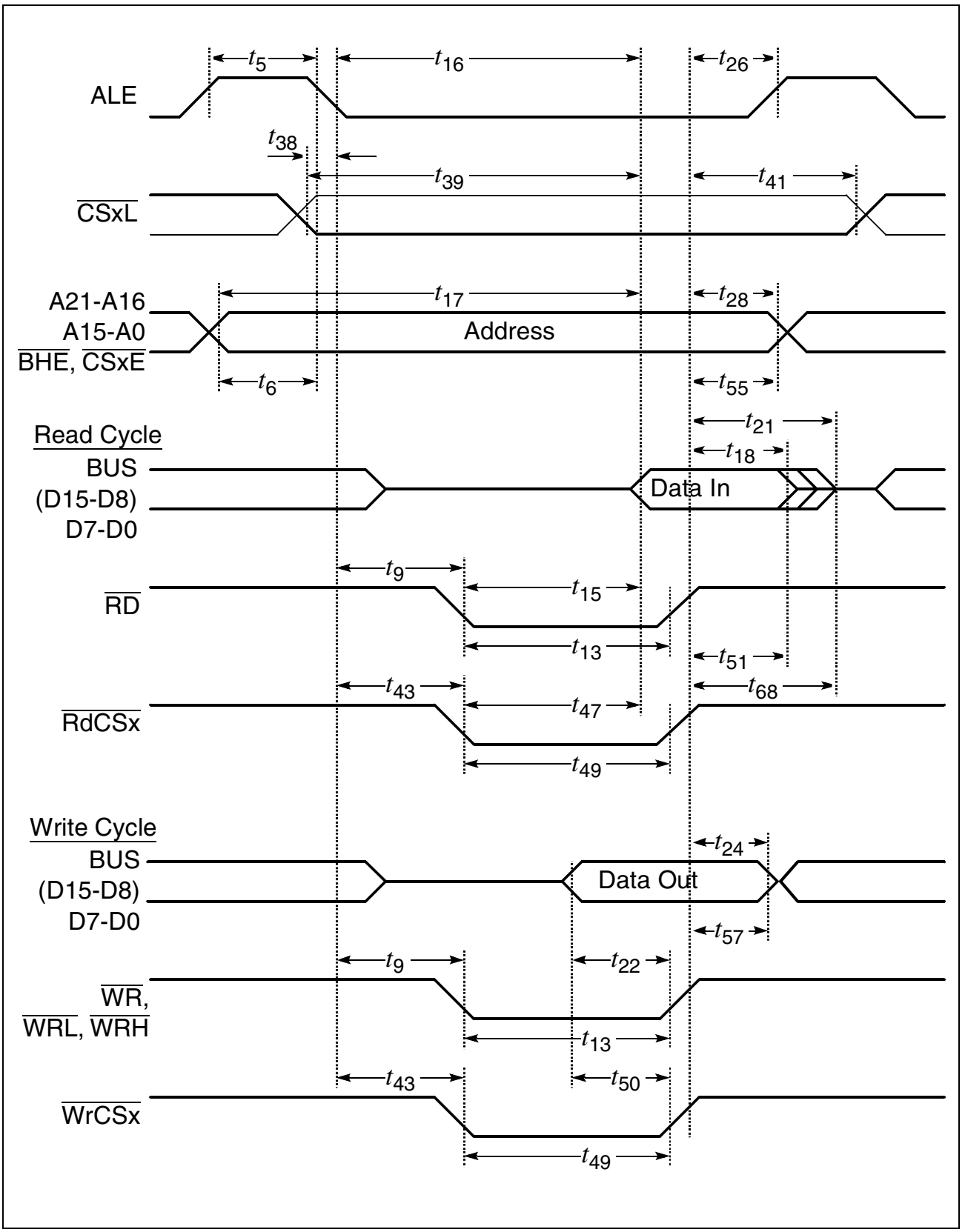

Figure 23 **External Memory Cycle: Demultiplexed Bus, No Read/Write Delay, Extended ALE**

AC Characteristics

CLKOUT

(Operating Conditions apply)

Parameter	Symbol		Max. CPU Clock = 25 MHz		Variable CPU Clock 1 / 2TCL = 1 to 25 MHz		Unit
			min.	max.	min.	max.	
CLKOUT cycle time	t_{29}	CC	40	40	2TCL	2TCL	ns
CLKOUT high time	t_{30}	CC	14	–	TCL - 6	–	ns
CLKOUT low time	t_{31}	CC	10	–	TCL - 10	–	ns
CLKOUT rise time	t_{32}	CC	–	4	–	4	ns
CLKOUT fall time	t_{33}	CC	–	4	–	4	ns
CLKOUT rising edge to ALE falling edge	t_{34}	CC	$0 + t_A$	$10 + t_A$	$0 + t_A$	$10 + t_A$	ns

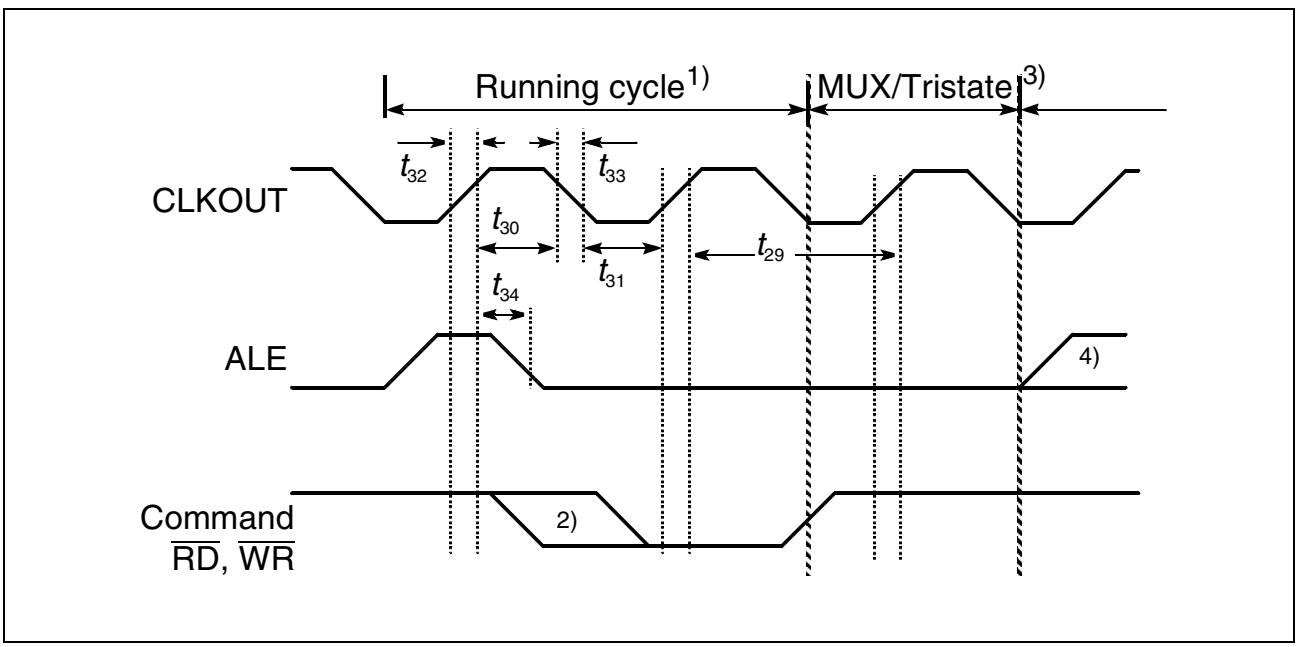

Figure 24 CLKOUT Timing

Notes

1) Cycle as programmed, including MCTC waitstates (Example shows 0 MCTC WS).
2) The leading edge of the respective command depends on RW-delay.
3) Multiplexed bus modes have a MUX waitstate added after a bus cycle, and an additional MTTC waitstate may be inserted here.
For a multiplexed bus with MTTC waitstate this delay is 2 CLKOUT cycles, for a demultiplexed bus without MTTC waitstate this delay is zero.
4) The next external bus cycle may start here.

External XRAM Access

If XPER-Share mode is enabled the on-chip XRAM of the C164CI can be accessed (during hold states) by an external master like an asynchronous SRAM.

Table 16 XRAM Access Timing (Operating Conditions apply)

Parameter		Symbol		Limit Values		Unit
				min.	max.	
Address setup time before $\overline{RD}/\overline{WR}$ falling edge		t_{40}	SR	4	–	ns
Address hold time after $\overline{RD}/\overline{WR}$ rising edge		t_{41}	SR	0	–	ns
Data turn on delay after $\overline{RD}$ falling edge	Read	t_{42}	CC	2	–	ns
Data output valid delay after address latched	Read	t_{43}	CC	–	37	ns
Data turn off delay after $\overline{RD}$ rising edge	Read	t_{44}	CC	0	10	ns
Write data setup time before $\overline{WR}$ rising edge	Write	t_{45}	SR	10	–	ns
Write data hold time after $\overline{WR}$ rising edge	Write	t_{46}	SR	1	–	ns
$\overline{WR}$ pulse width	Write	t_{47}	SR	18	–	ns
$\overline{WR}$ signal recovery time	Write	t_{48}	SR	t_{40}	–	ns

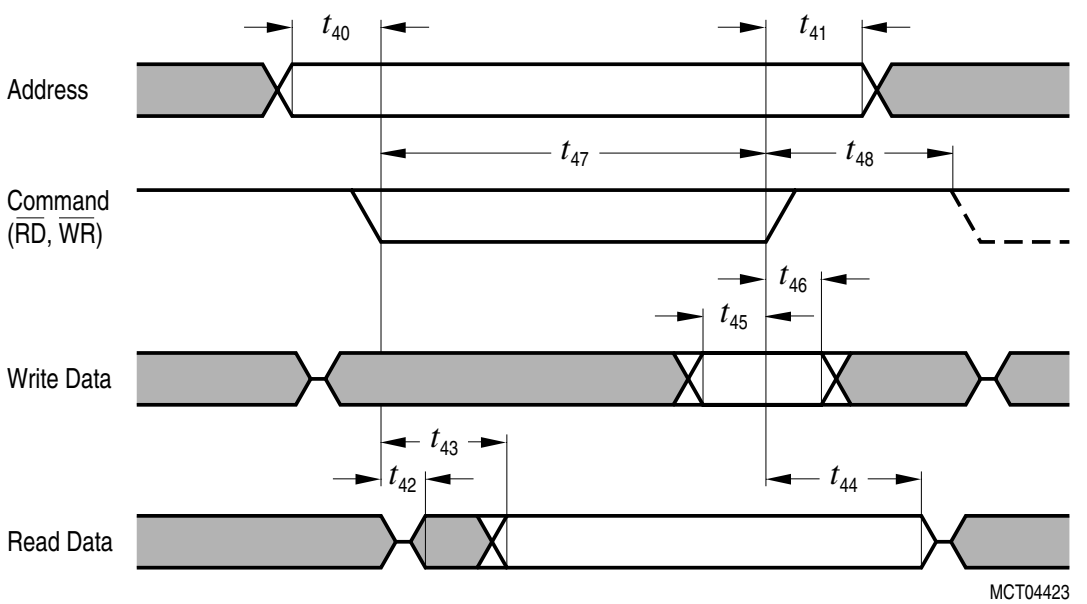

Figure 25 External Access to the XRAM

Package Outlines

P-MQFP-80-7
(Plastic Metric Quad Flat Package)

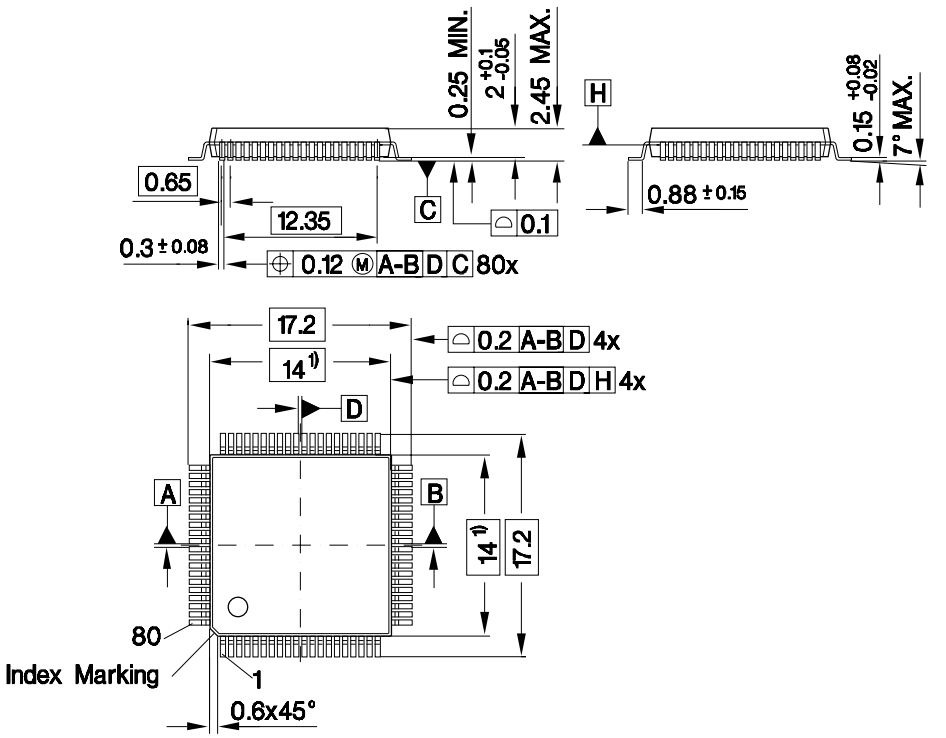

1) Does not include plastic or metal protrusion of 0.25 max. per side

GPM05249

Sorts of Packing
Package outlines for tubes, trays etc. are contained in our Data Book “Package Information”.

SMD = Surface Mounted Device

Dimensions in mm

Infineon goes for Business Excellence

“Business excellence means intelligent approaches and clearly defined processes, which are both constantly under review and ultimately lead to good operating results.
Better operating results and business excellence mean less idleness and wastefulness for all of us, more professional success, more accurate information, a better overview and, thereby, less frustration and more satisfaction.”

Dr. Ulrich Schumacher

http://www.infineon.com

Published by Infineon Technologies AG