2N2270

NPN SILICON TRANSISTOR



TO-39 CASE

Central Semiconductor Corp.

www.centralsemi.com

DESCRIPTION:

The CENTRAL SEMICONDUCTOR 2N2270 is a NPN silicon transistor, mounted in a hermetically sealed package, designed for general purpose amplifier applications.

MARKING: FULL PART NUMBER

MAXIMUM RATINGS: (T_A=25°C unless otherwise noted)

	SYMBOL		UNITS
Collector-Base Voltage	V_{CBO}	60	V
Collector-Emitter Voltage	V_{CER}	60	V
Collector-Emitter Voltage	V_{CEO}	45	V
Emitter-Base Voltage	V_{EBO}	7.0	V
Continuous Collector Current	I_C	1.0	A
Power Dissipation	P_D	1.0	W
Power Dissipation (T_C=25°C)	P_D	5.0	W
Operating and Storage Junction Temperature	T_J, T_{stg}	-65 to +200	°C
Thermal Resistance	Θ_{JA}	175	°C/W
Thermal Resistance	Θ_{JC}	35	°C/W

ELECTRICAL CHARACTERISTICS: (T_C=25°C unless otherwise noted)

SYMBOL	TEST CONDITIONS	MIN	MAX	UNITS
I_{CBO}	V_{CB}=60V		50	nA
I_{CBO}	V_{CB}=60V, (T_C=150°C)		50	µA
I_{EBO}	V_{EB}=5.0V		100	nA
BV_{CBO}	I_C=100µA	60		V
BV_{CER}	I_C=100mA, R_{BE}=10Ω	60		V
BV_{CEO}	I_C=100mA	45		V
BV_{EBO}	I_E=100µA	7.0		V
$V_{CE(SAT)}$	I_C=150mA, I_B=15mA		0.9	V
$V_{BE(SAT)}$	I_C=150mA, I_B=15mA		1.2	V
h_{FE}	V_{CE}=10V, I_C=1.0mA	30		
h_{FE}	V_{CE}=10V, I_C=150mA	50	200	
h_{fe}	V_{CE}=10V, I_C=5.0mA, f=1.0kHz	50	275	
f_T	V_{CE}=10V, I_C=50mA	100		MHz
C_{ob}	V_{CB}=10V, I_E=0		15	pF
C_{ib}	V_{BE}=0.5V, I_C=0		80	pF
NF	V_{CE}=10V, I_C=0.3mA, f=1.0kHz, R_G=1.0kΩ, BW=1.0Hz		10	dB

R0 (17-August 2012)

2N2270

NPN SILICON TRANSISTOR

TO-39 CASE - MECHANICAL OUTLINE

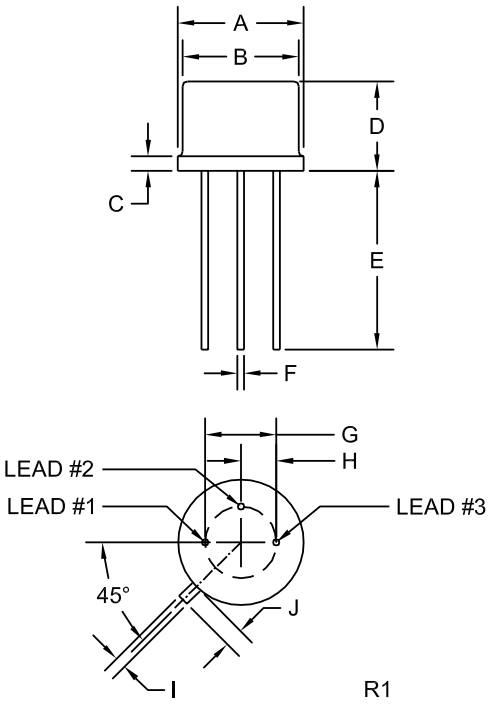

DIMENSIONS				
	INCHES		MILLIMETERS	
SYMBOL	MIN	MAX	MIN	MAX
A (DIA)	0.335	0.370	8.51	9.40
B (DIA)	0.315	0.335	8.00	8.51
C	-	0.040	-	1.02
D	0.240	0.260	6.10	6.60
E	0.500	-	12.70	-
F (DIA)	0.016	0.021	0.41	0.53
G (DIA)	0.200		5.08	
H	0.100		2.54	
I	0.028	0.034	0.71	0.86
J	0.029	0.045	0.74	1.14

TO-39 (REV: R1)

LEAD CODE:
1) Emitter
2) Base
3) Collector

MARKING: FULL PART NUMBER

OUTSTANDING SUPPORT AND SUPERIOR SERVICES

PRODUCT SUPPORT

Central's operations team provides the highest level of support to insure product is delivered on-time.

- Supply management (Customer portals)
- Inventory bonding
- Consolidated shipping options
- Custom bar coding for shipments
- Custom product packing

DESIGNER SUPPORT/SERVICES

Central's applications engineering team is ready to discuss your design challenges. Just ask.

- Free quick ship samples (2nd day air)
- Online technical data and parametric search
- SPICE models
- Custom electrical curves
- Environmental regulation compliance
- Customer specific screening
- Up-screening capabilities
- Special wafer diffusions
- PbSn plating options
- Package details
- Application notes
- Application and design sample kits
- Custom product and package development

REQUESTING PRODUCT PLATING

1. If requesting Tin/Lead plated devices, add the suffix " TIN/LEAD" to the part number when ordering (example: 2N2222A TIN/LEAD).
2. If requesting Lead (Pb) Free plated devices, add the suffix " PBFREE" to the part number when ordering (example: 2N2222A PBFREE).

CONTACT US

Corporate Headquarters & Customer Support Team

Central Semiconductor Corp.
145 Adams Avenue
Hauppauge, NY 11788 USA
Main Tel: (631) 435-1110
Main Fax: (631) 435-1824
Support Team Fax: (631) 435-3388
www.centralsemi.com

Worldwide Field Representatives:
www.centralsemi.com/wwreps

Worldwide Distributors:
www.centralsemi.com/wwdistributors

For the latest version of Central Semiconductor's **LIMITATIONS AND DAMAGES DISCLAIMER**, which is part of Central's Standard Terms and Conditions of sale, visit: www.centralsemi.com/terms